4ManPro

Elements For Manufacturing Processes

CONTROLES DIRECCIONALES

YUKEN 油圧機器

油研工業株式會社

E10

VÁLVULAS DIRECCIONALES DE OPERACIÓN MECÁNICA

Mechanically Operated Directional Valves

These valves are chiefly used to shift the pilot circuit. Rotary Type Directional Valves and Cam Operated Type Directional Valves are available.

Rotary Type Directional Valves

These valves are used to rotate the spool either manually or by way of cam and shift the direction of oil flow. The detented mechanism incorporated in these valves prevents the valve from being changed over by itself due to vibrations or any other shocks.

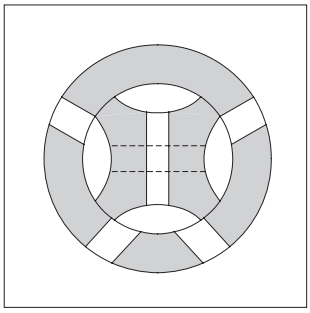

Specifications

Model Numbers		Rated Flow L/min (U.S.GPM)	Max. Operating Pressure MPa (PSI)	Max. T-Line Pressure MPa (PSI)	Approx. Mass kg (lbs.)	
Threaded Connection	Sub-plate Mounting				DRT Type	DRG Type
DRT-02-∗D∗-20∗	DRG-02-∗D∗-20∗	16 (4.2)	7 (1020)	7 (1020) ★	4.7 (10.4)	3.4 (7.5)

★ When a back pressure of more than 3 MPa (435 PSI) is generated in the tank port, be sure to use External Drain Type.

Model Number Designation

F-	DR	G	-02	-2	D	2	-A	-R	-20	∗
Special Seals	Series Connection	Type of Mounting	Valve Size	No. of Valve Position	Spool-Spring Arrangement	Spool Type	Operation Type	Drain Connection	Design Number	Design Standards
F: Special seals for phosphate ester type fluids (Omit if not required)	**DR**: Rotary Type Directinal Valve	**T**: Threaded Connection	**02**	**2**	**D**: No-spring Detented	**2**	**A**: Reversing Dog **B**: Reversing Dog & Manual **C**: Manual	**None**: Intrenal Drain **R**: External Drain	**20**	**None**: Japanese Std. "JIS" **80**: European Design Std. **90**: N. American Design Std.
		G: Sub-plate Mounting	**02**	**3**		**4**			**20**	**None**: Japanese Std. "JIS" & European Design Std. **90**: N. American Design Std.

Note: When selecting the Model type, be sure to give the model number from the following Graphic Symbols.
No combinations other than those in the table below are allowed.

Graphic Symbols

No. of Position	2-Position Type			3-Position Type
Operation Type	Reversing Dog Operation	Reversing Dog & Manual Operation	Manual Operation	Manual Operation
Graphic Symbols	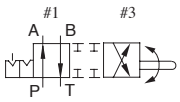	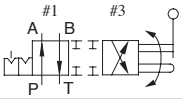	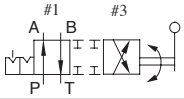	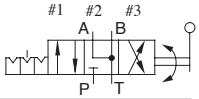
Model No.	DR∗-02-2D2-A	DR∗-02-2D2-B	DR∗-02-2D2-C	DR∗-02-3D4-C

Instructuions

- **Changeover Torque**
  When the pressure of pressure port "P" and cylinder port "A" (or "B") is set to 7 MPa (1020 PSI), the valve changeover torque will be as right side table:

Changeover Torque

Tank Port Back Pres. MPa (PSI)	Torque Nm (in. 1bs.)
0	1.0 (8.9)
3 (435)	4.8 (42.5)

- **2-Way directional valves**
  Be sure to use the External Drain Type Valve of spool type "2" and plug the tank port.

Sub-plates

Drain Connection	Japanese Standard "JIS"		European Design Standard		N.American Design Standard		Approx. Mass kg (1bs.)
	Sub-plate Model Numbers	Thread Size	Sub-plate Model Numbers	Thread Size	Sub-plate Model Numbers	Thread Size	
For Internal Drain	DRGM-02-20 DRGM-02X-20	Rc 1/4 Rc 3/8	DRGM-02-2080 DRGM-02X-2080	1/4 BSP.F 3/8 BSP.F	DRGM-02-2090 DRGM-02X-2090	1/4 NPT 3/8 NPT	1.9 (4.2)
For External Drain	DRGM-02-R-20 DRGM-02X-R-20	Rc 1/4 Rc 3/8	DRGM-02-R-2080 DRGM-02X-R-2080	1/4 BSP.F 3/8 BSP.F	DRGM-02-R-2090 DRGM-02X-R-2090	1/4 NPT 3/8 NPT	

● Sub-plates are available. Specify the sub-plate model number from the table above.
When sub-plates are not used, the mounting surface should have a good machined finish.

Mounting Bolts

The Sub-plate Mounting Type Valves (DRG-02) only are furnished with the following mounting bolts.

Model Numbers	Socket Head Cap Screw (5 Pcs.)	
	Japanese Standard "JIS" European Design Standard	N. American Design Standard
DRG-02	M8 × 45 Lg.	5/16-18 UNC × 1-3/4 Lg.

Pressure Drop

Hydraulic Fluid: Viscosity 35 mm²/s (164 SSU) , Specific Gravity 0.850

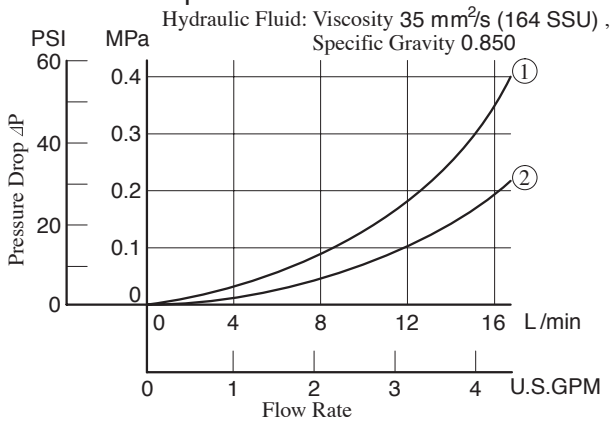

Valve Type	Pressure Drop Curve No.			
	P→A	B→T	P→B	A→T
2D2	②	②	②	②
3D4	②	②	①	②

1. For any other viscosity, multiply by the factors in the table below.

Viscosity	mm²/s	15	20	30	40	50	60	70	80	90	100
	SSU	77	98	141	186	232	278	324	371	417	464
Factor		0.81	0.87	0.96	1.03	1.09	1.14	1.19	1.23	1.27	1.30

2. For any other specific gravity (G'), the pressure drop (⊿P') may be obtained from the formula below.

$$\Delta P' = \Delta P\ (G'/0.850)$$

DRT-02-∗D∗-∗-20/2080/2090

● **Type "A" : Reversing Dog Operation**

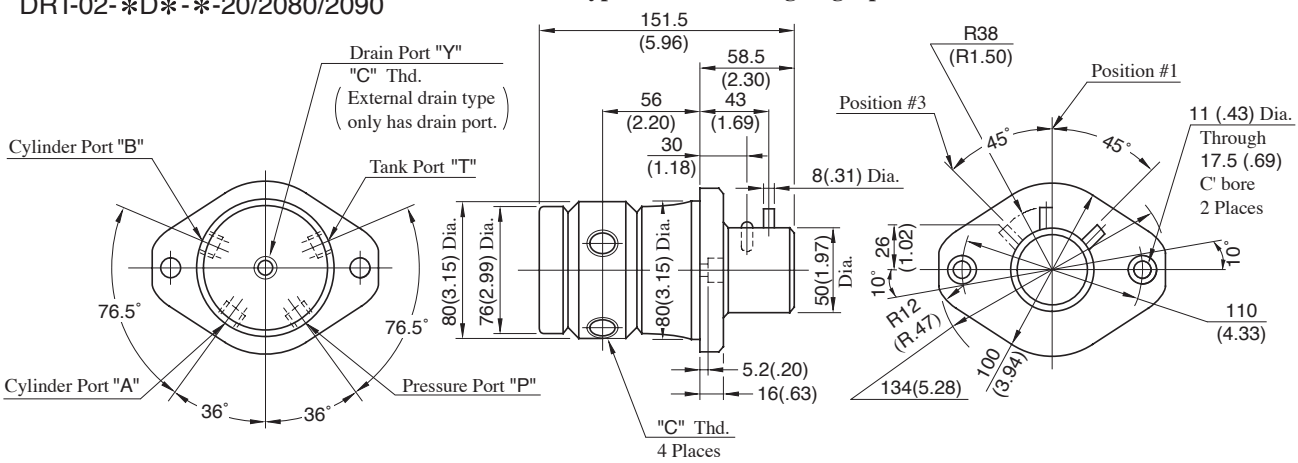

Model Numbers	"C" Thd.
DRT-02-∗D∗-∗-20	Rc 1/4
DRT-02-∗D∗-∗-2080	1/4 BSP.F
DRT-02-∗D∗-∗-2090	1/4 NPT

DIMENSIONS IN MILLIMETRES (INCHES)

● **Type "B": Reverseing Dog and Manual Operation**

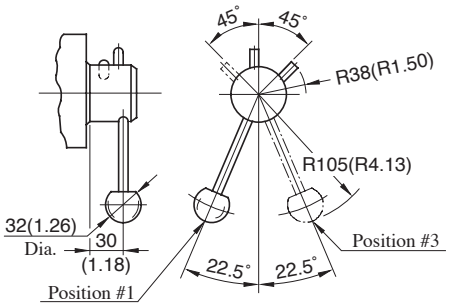

● **Type "C": Manual Operation**

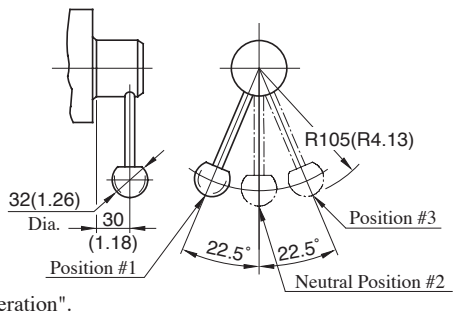

For other dimensions, refer to "Reversing Dog Operation".

DRG-02-∗D∗-∗-20/2090

● **Type "A": Reversing Dog Operation**

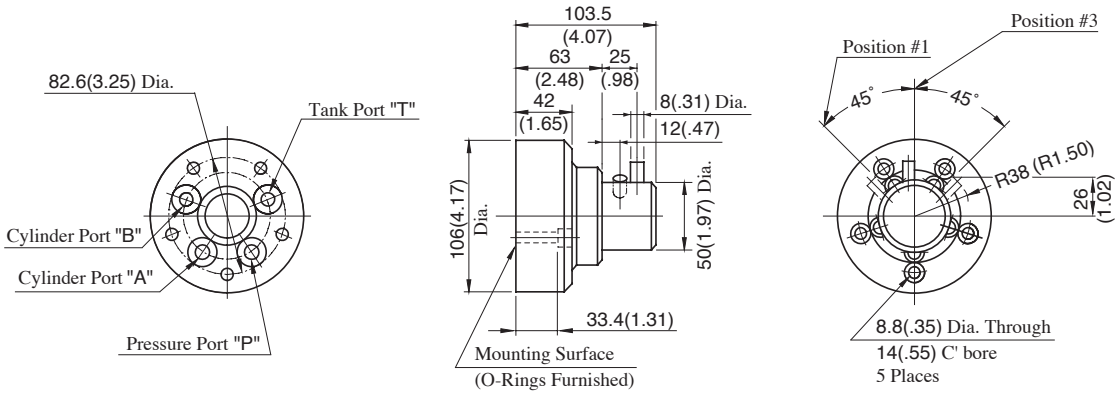

For information on Type "B": reversing Dog and Manual Operation and Type "C": Manual Operation, see DRT-02 on the previous page.

DIMENSIONS IN MILLIMETRES (INCHES)

Sub-plates : DRGM-$^{02}_{02X}$-∗-20/2080/2090

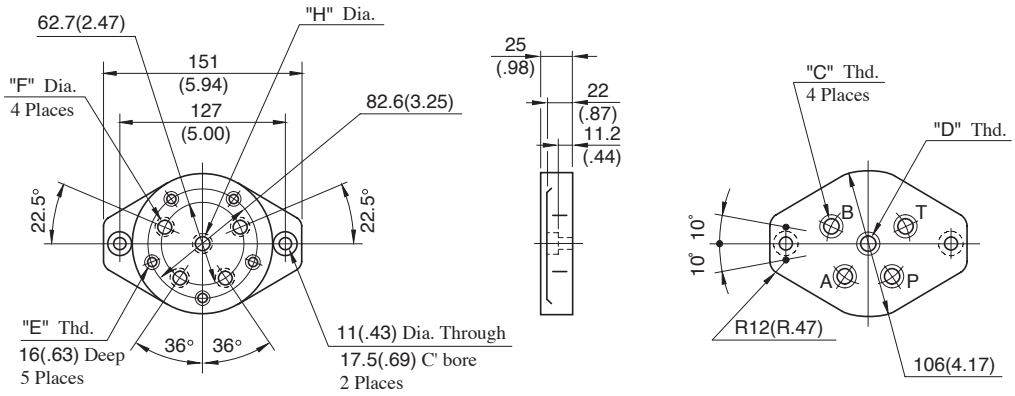

Sub-plate Model Numbers	"C" Thd.	"D" Thd.	"E" Thd.	mm (Inches) F	mm (Inches) H	Remarks
DRGM-02-20 DRGM-02X-20	Rc 1/4 Rc 3/8	—	M8	11 (.43)	—	For Internal Drain
DRGM-02-2080 DRGM-02X-2080	1/4 BSP.F 3/8 BSP.F	—	M8	11.7 (.46)		
DRGM-02-2090 DRGM-02X-2090	1/4 NPT 3/8 NPT	—	5/16-18 UNC	11 (.43)		
DRGM-02-R-20 DRGM-02X-R-20	Rc 1/4 Rc 3/8	Rc 1/4	M8	11 (.43)	11 (.43)	For External Drain
DRGM-02-R-2080 DRGM-02X-R-2080	1/4 BSP.F 3/8 BSP.F	1/4 BSP.F	M8	11.7 (.46)	11.7 (.46)	
DRGM-02-R-2090 DRGM-02X-R-2090	1/4 NPT 3/8 NPT	1/4 NPT	5/16-18 UNC	11 (.43)	11 (.43)	

List of Seals

DRT-02-∗D∗-∗-20/2080/2090

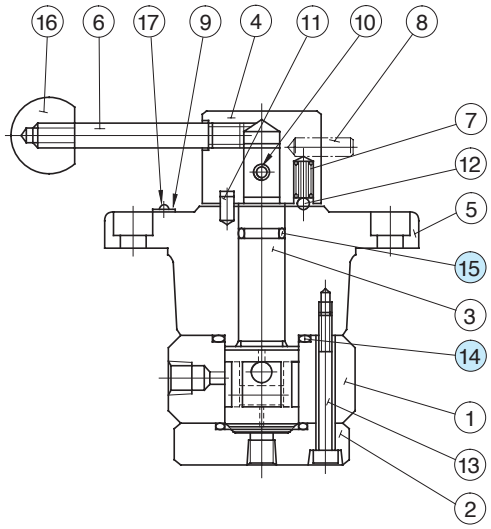

Item	Name of Parts	Part Numbers	Qty.	Remarks
14	O-Ring	SO-NB-G35	2	Included in Seal Kit (Kit No.: KS-DRT-02-20)
15	O-Ring	SO-NA-P16	1	

DRG-02-∗D∗-∗-20/2090

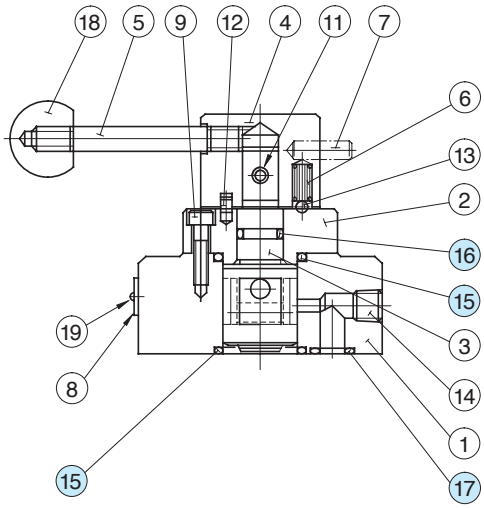

Item	Name of Parts	Part Numbers	Qty.	Remarks
15	O-Ring	SO-NB-G35	2	Included in Seal Kit (Kit No.: KS-DRG-02-20)
16	O-Ring	SO-NA-P16	1	
17	O-Ring	SO-NB-P16	4	

Cam Operated Directional Valves

These valves may be used to shift the direction of oil flow by depressing the spool by way of a cam.

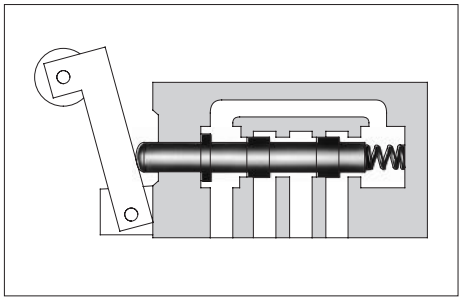

Specifications

Model Numbers		Max. Flow ★ L/min (U.S.GPM)	Max. Operating Pressure MPa (PSI)	Max. T-Line Pressure MPa (PSI)	Approx. Mass kg (lbs.)	
Threaded Connection	Sub-plate Mounting				DCT Type	DCG Type
DCT-01-2B∗-40∗	DCG-01-2B∗-40∗	30 (7.9)	21 (3050)	7 (1020)	1.1 (2.4)	1.1 (2.4)
DCT-03-2B∗-50∗	DCG-03-2B∗-50∗	100 (26.4)	25 (3630)	10 (1450)	4.5 (9.9)	3.8 (8.4)

★ Max. flow indicates the ceiling flow which does not affect the normal function (changeover) of valves.

Model Number Designation

F-	DC	T	-01	-2	B	2	-R	-40	∗
Special Seals	Series Number	Type of Connection	Valve Size	No. of Valve Position	Spool-Spring Arrangement	Spool Type	Roller Position	Design Number	Design Standards
F: Special seals for phosphate ester type fluids (Omit if not required)	**DC**: Cam Operated Directional Valve	**T**: Threaded Connection	**01**	**2**	**B**: Spring Offset	**2**	**None** (Normal Position) **R** **Y** (DC∗-01 only) 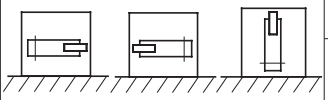 Mounting Surface	**40**	**None**: Japanese Standard "JIS" **80**: European Design Standard **90**: N. American Design Standard
			03			**3**		**50**	
		G: Sub-plate Mounting	**01**			**8**		**40**	**None**: Japanese Standard "JIS" & European Design Standard **90**: N. American Design Standard
			03					**50**	

Sub-plates

Valve Model Numbers	Japanese Standard "JIS"		European Design Standard		N. American Design Standard		Approx. Mass kg (1bs.)
	Sub-plate Model Numbers	Thread Size	Sub-plate Model Numbers	Thread Size	Sub-plate Model Numbers	Thread Size	
DCG-01	DSGM-01-31	Rc 1/8	DSGM-01-3180	1/8 BSP.F	DSGM-01-3190	1/8 NPT	0.8 (1.8)
	DSGM-01X-31	Rc 1/4	DSGM-01X-3180	1/4 BSP.F	DSGM-01X-3190	1/4 NPT	0.8 (1.8)
	DSGM-01Y-31	Rc 3/8	—	—	DSGM-01Y-3190	3/8 NPT	0.8 (1.8)
DCG-03	DSGM-03-41	Rc 3/8	DSGM-03-2180	3/8 BSP.F	DSGM-03-2190	3/8 NPT	3.0 (6.6)
	DSGM-03X-41	Rc 1/2	DSGM-03X-2180	1/2 BSP.F	DSGM-03X-2190	1/2 NPT	3.0 (6.6)
	DSGM-03Y-41	Rc 3/4	DSGM-03Y-2180	3/4 BSP.F	DSGM-03Y-2190	3/4 NPT	4.7 (10.4)

● Sub-plates are available. Specify the sub-plate model number from the table above.
When sub-plates are not used, the mounting surface should have a good machined finish.

Mounting Bolts

Socket head cap screws in the table below are included.

Model Numbers	Socket Head Cap Screw			
	Japanese Standard "JIS" European Design Standard	N. American Design Standard	Qty.	Tightening Torque Nm (in. 1bs)
DCT-01	M5 × 45 Lg.	No. 10-24 UNC × 1-3/4 Lg.	2	5-7 (43-60)
DCG-01	M5 × 45 Lg.	No. 10-24 UNC × 1-3/4 Lg.	4	5-7 (43-60)
DCG-03	M6 × 35 Lg.	1/4-20 UNC × 1-1/2 Lg.	4	12-15 (105-130)

Direction of Oil Flow for Roller Position

Model Numbers	Graphic Symbols	Roller Position and Direction of Oil Flow Roller Stroke from Offset Position mm(Inches) Extended(Offset) — Depressed
DCT DCG-01-2B2	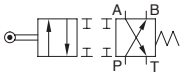	P → B, A → T: 0 – 3.8 (.150) All ports blocked: 3.8 (.150) – 4.6 (.181) P → A, B → T: 4.6 (.181) – 9.5 (.374)
DCT DCG-01-2B3		P → B, A → T: 0 – 3.8 (.150) All ports open: 3.8 (.150) – 4.6 (.181) P → A, B → T: 4.6 (.181) – 9.5 (.374)
DCT DCG-01-2B8	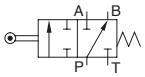	P → B, A&T ports blocked: 0 – 3.8 (.150) P → A, B&T ports blocked: 3.8 (.150) – 9.5 (.374)
DCT DCG-03-2B2	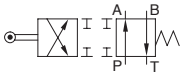	P → A, B → T: 0 – 3.4 (.134) All ports blocked: 3.4 (.134) – 3.8 (.150) P → B, A → T: 3.8 (.150) – 7 (.276)
DCT DCG-03-2B3		P → A, B → T: 0 – 3.0 (.118) All ports open: 3.0 (.118) – 4.0 (.157) P → B, A → T: 4.0 (.157) – 7 (.276)
DCT DCG-03-2B8	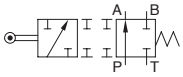	P → A, B&T ports blocked: 0 – 3.6 (.142) All ports blocked: 3.6 (.142) – 4.7 (.185) P → B, A&T ports blocked: 4.7 (.185) – 7 (.276)

Instructions

Valve Type "2B8"

Tank port "T" functions as a drain port. Directly connect it to the reservoir. [Max. allowable back pressure 0.35 MPa (50 PSI)].

Actuation Force

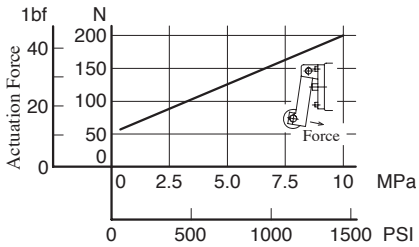

T-Line Back Pressure

Pressure Drop

Pressure drop curves based on viscosity of 35 mm^2/s (164 SSU) and specific gravity of 0.850.

DCT DCG -01

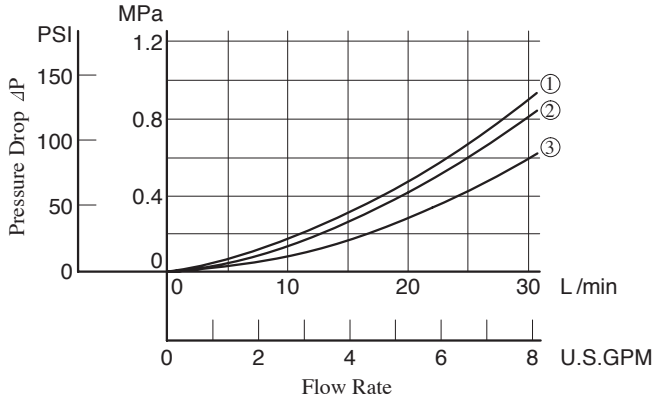

Model Numbers	Pressure Drop Curve No.			
	P→A	B→T	P→B	A→T
DCT-01-2B2	①	①	②	①
DCT-01-2B3				
DCT-01-2B8	②	—	②	—
DCG-01-2B2	②	②	③	③
DCG-01-2B3				
DCG-01-2B8	③	—	③	—

DCT DCG -03

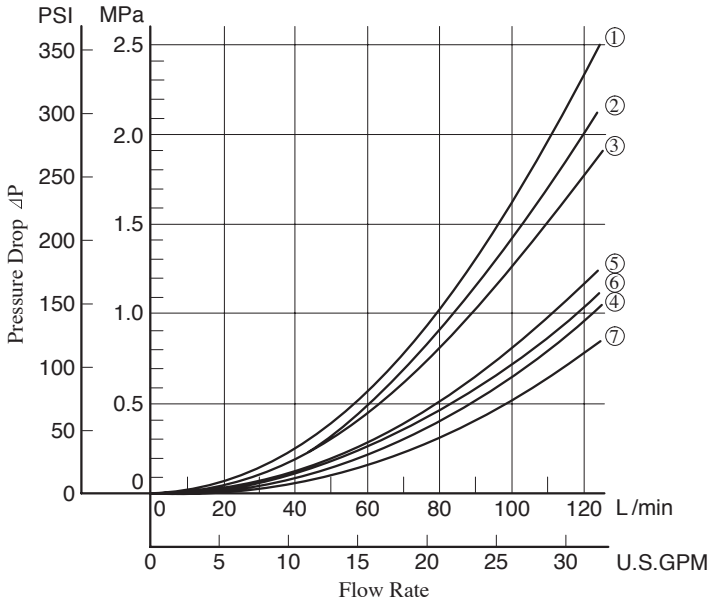

Model Numbers	Pressure Drop Curve No.			
	P→A	B→T	P→B	A→T
DCG-03-2B2	②	①	④	④
DCG-03-2B3	③	②	⑦	⑦
DCG-03-2B8	⑥	—	⑤	—

- For any other viscosity, multiply the factors in the table below.

Viscosity	mm^2/s	15	20	30	40	50	60	70	80	90	100
	SSU	77	98	141	186	232	278	324	371	417	464
Factor		0.81	0.87	0.96	1.03	1.09	1.14	1.19	1.23	1.27	1.30

- For any other specific gravity (G'), the pressure drop (⊿ P') may be obtained from the formula below.
  ⊿P' = ⊿P (G'/G) where, ⊿P is a value on the above chart and G is 0.850.

DCT-01-2B∗-∗-40/4080/4090

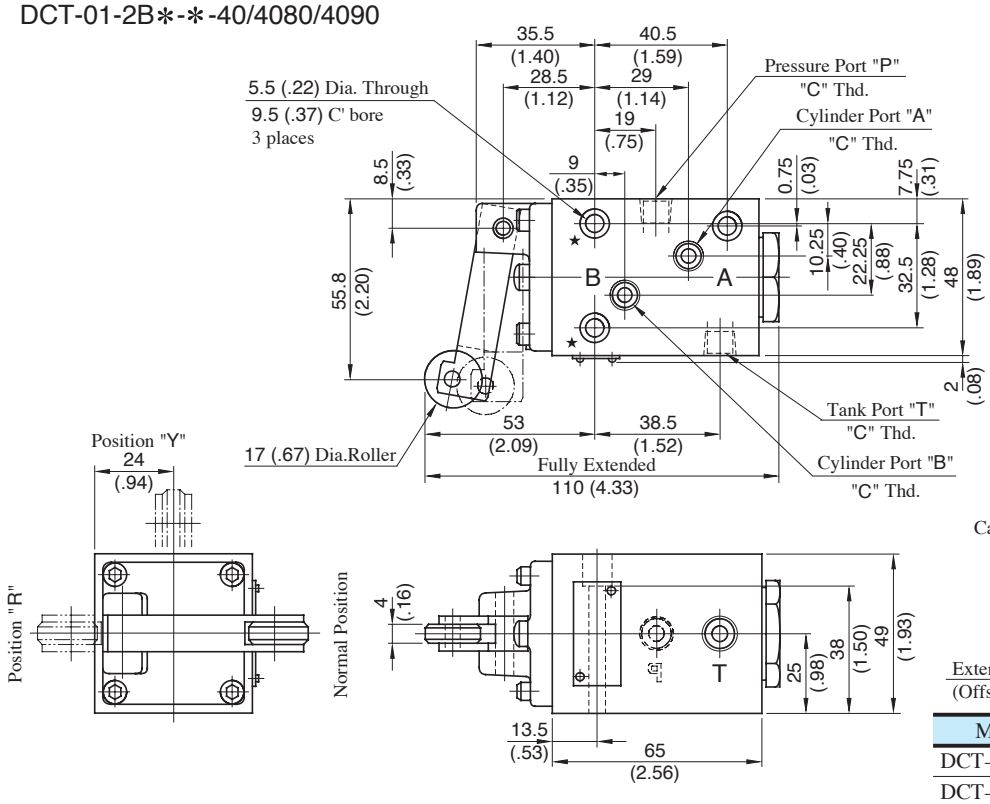

Cam and Roller Travel

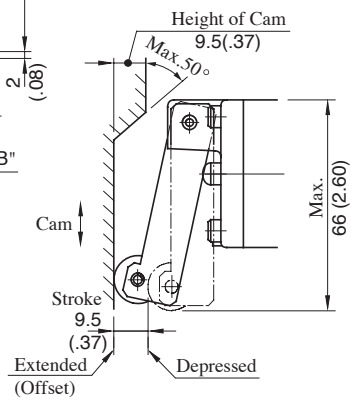

Model Numbers	"C" Thd.
DCT-01-2B∗-∗-40	Rc 1/8
DCT-01-2B∗-∗-4080	1/8 BSP.F
DCT-01-2B∗-∗-4090	1/8 NPT

Note: When mounting the valve, be sure to use two mounting holes marked with ★.

DIMENSIONS IN MILLIMETRES (INCHES)

DCT-03-2B∗-∗-50/5080/5090

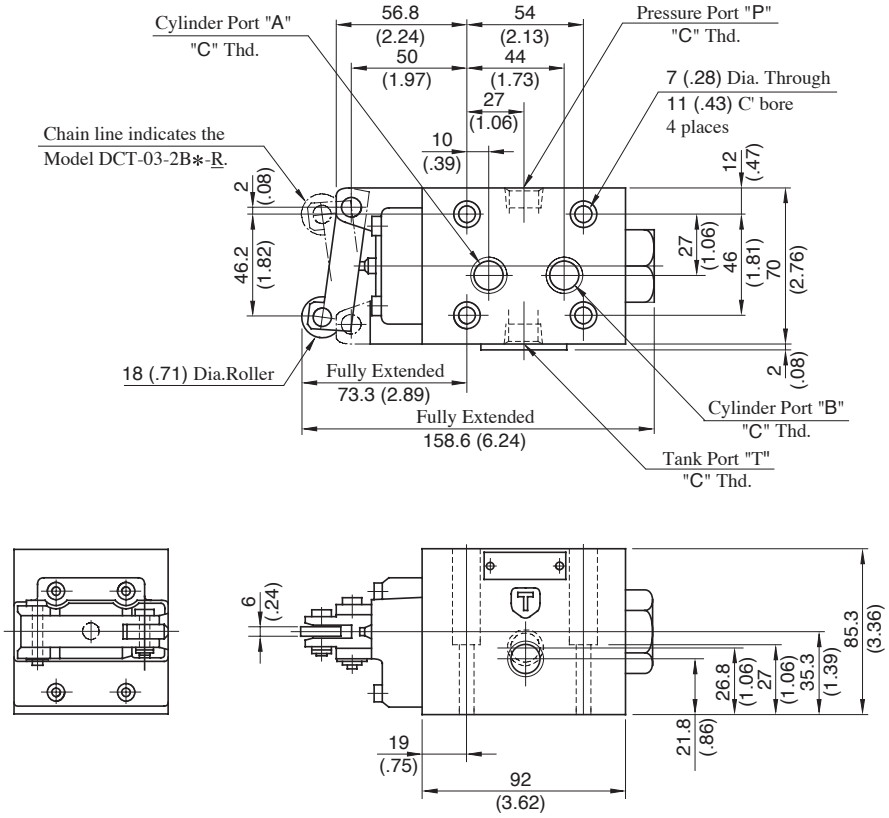

Cam and Roller Travel

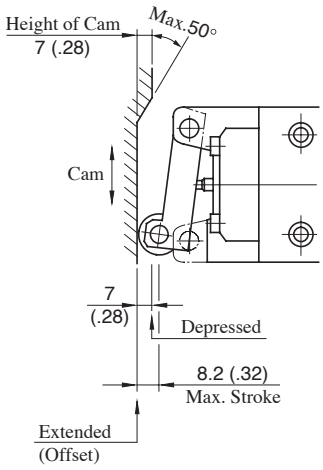

Model Numbers	"C" Thd.
DCT-03-2B∗-∗-50	Rc 3/8
DCT-03-2B∗-∗-5080	3/8 BSP.F
DCT-03-2B∗-∗-5090	3/8 NPT

DCG-01-2B∗-∗-∗40/4090

Mounting Surface: ISO 4401-AB-03-4-A

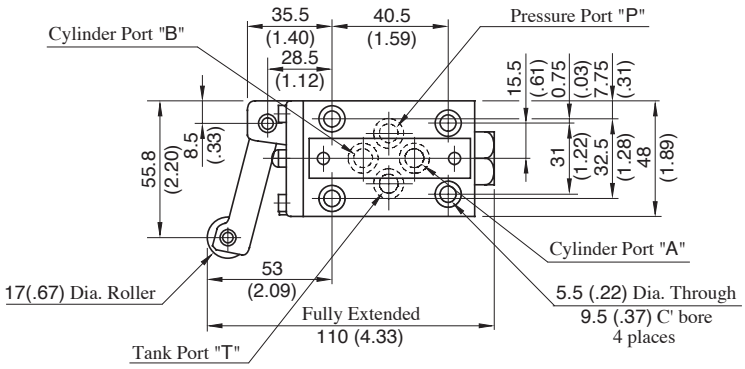

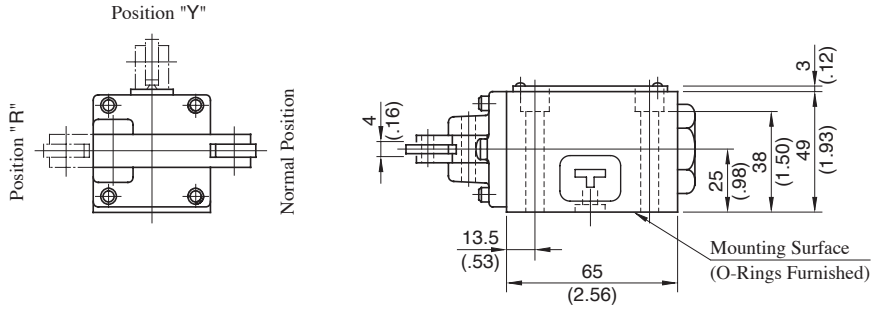

Note1: For the cam and roller travel, see DCT-01 in the previous page.

Note2: For the valve mounting surface dimensions, see the dimensional drawing of the sharable sub-plate in page 356.

DIMENSIONS IN MILLIMETRES (INCHES)

Mounting Surface: ISO 4401-AC-05-4-A

DCG-03-2B∗-∗-∗50/5090

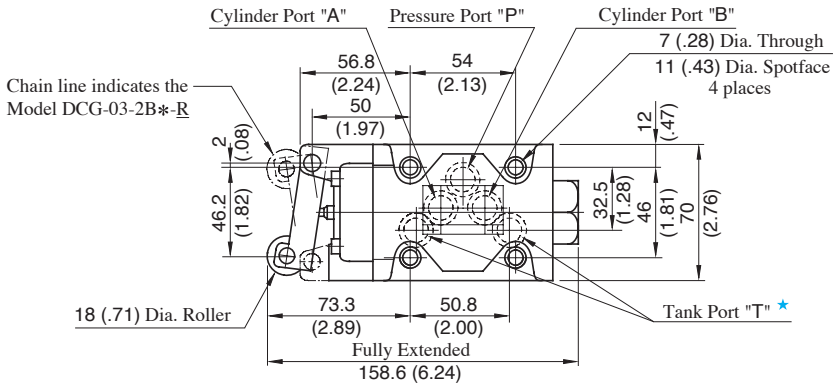

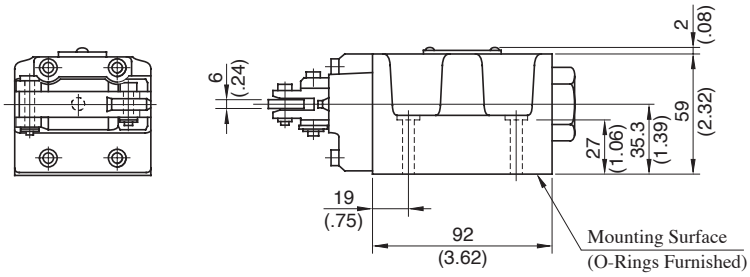

★. Although the tank port is shown on the left in our sub-plate, either may be used.

Note1: For the cam and roller travel, see DCT-03 in the previous page.

Note2: For the valve mounting surface dimensions, see the dimensional drawing of the sharable sub-plate in page 373.

List of Seals

DCT-01-2B∗-∗-40/4080/4090
DCG-01-2B∗-∗-40/4090

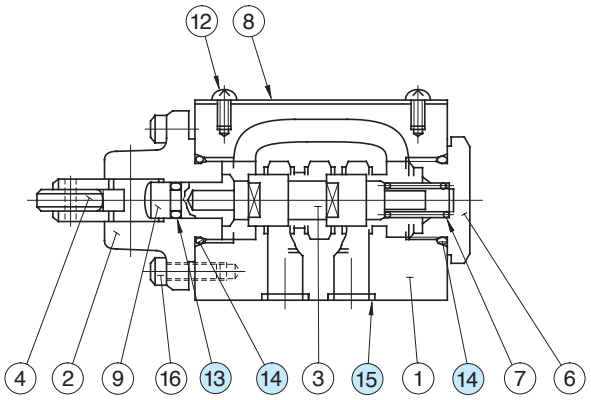

Item	Name of Parts	Part Numbers	Quantity	
			DCT-01	DCG-01
13	O-Ring	SO-NA-P5	1	1
14	O-Ring	SO-NB-P18	2	2
15	O-Ring	SO-NB-P9	0	4

Note: When ordering the o-rings, please specify the seal kit number from the table right.

● List of Seal Kit No.

Valve Mdel Numbers	Seal Kit Numbers
DCT-01-2B∗-∗-40/4080/4090	KS-DCT-01-40
DCG-01-2B∗-∗-40/4090	KS-DCG-01-40

DCT-03-2B∗-∗-50/5080/5090
DCG-03-2B∗-∗-50/5090

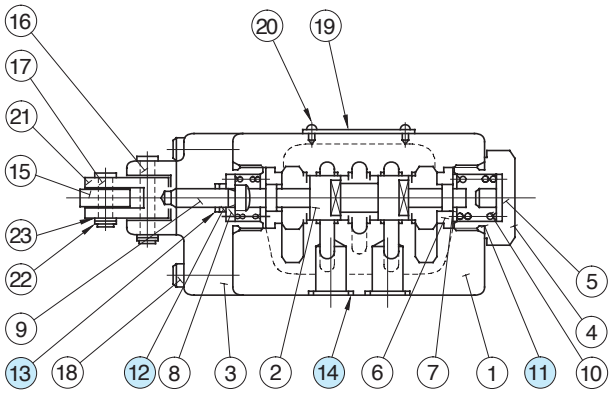

Item	Name of Parts	Part Numbers	Quantity	
			DCT-03	DCG-03
11	O-Ring	SO-NB-P21	2	2
12	O-Ring	SO-NA-P6	1	1
13	Back Up Ring	SO-BE-P6	1	1
14	O-Ring	SO-NB-A014	0	5

Note: When ordering the seals, please specify the seal kit number from the table right.

● List of Seal Kit No.

Valve Mdel Numbers	Seal Kit Numbers
DCT-03-2B∗-∗-50/5080/5090	KS-DCT-03-50
DCG-03-2B∗-∗-50/5090	KS-DCG-03-50

YUKEN 油圧機器

油研工業株式會社

YUKEN 標準油圧ユニット

4ManPro
Mexico Branch Office
Elements For Manufacturing Processes

MEXICO BRANCH OFFICE
Roberto Diaz No. 401
Ciudad Industrial
Aguascalientes, Ags.
México
20290

4ManPro@4ManPro.com
(449) 171 3420
www.4ManPro.com/SPA/

USA BRANCH OFFICE
Pennzoil Place
700 Milam
Suite 1300
Houston, Tx, USA
77002

4ManPro-USA@4ManPro.com
+1 (832) 871 5022
www.4ManPro.com/ENG/

Elements For Manufacturing Processes