4ManPro

Elements For Manufacturing Processes

CATALOGO GENERAL

WILSON

偉順空油壓股份有限公司

Wilson Hydraulic Co., Ltd.

目錄
Contents

WILSON

偉順

創立於1977年
SINCE 1977

台灣專業製造
[www.wilsonsol.com.tw]

CE

TÜVRheinland CERTIFIED

比例閥 PROPORTIONAL VALVES

高速響應比例閥
High Response Proportional Flow and Directional Control Valve
ELVDT-G02 02

高速響應比例閥機板
High Response Proportional Flow and Directional Control Valve
ELVDT-H-MB-DC24 05

電液比例流量及換向控制閥
Electro-Hydraulic Proportional Flow & Directional Control Valve
EDFG-G01, G03, G04, G06, G10 06

油壓電磁比例壓力&流量感應複合閥
Electro-Hydraulic Proportional Relief & Flow Control Valve
EFBG-03, 06 12

疊加式電磁比例減壓閥
Modular Type Electro-hydraulic Proportional Reducing Valve
EOG-G01 16

電液比例先導溢流閥
Electro-Hydraulic Proportional Pilot Relief Valve
EDG-G01 18
EBG-G03, G06 20

功率放大器 Electronic Amplifier P-C Board
TW9820 23
TW2085 23
TW9820-2 23

電磁換向閥 SOLENOID OPERATED DIRECTIONAL VALVES

電磁換向閥 Solenoid Operated Directional Valve
DSG-02, DSG-03 26

引導換向閥 Pilot Operated Directional Valve
DHG 34

各式閥件 HYDRAULIC VALVES

積層型控制閥 Modular Hydraulic Valve
MRV, MBRV, MTV, MTCV, MPCV, MSCV, MCV 38

低噪音型先導式溢流閥 Low Noise Type Pilot Operated Relief Valve
SBG 40

低噪音型電磁控制溢流閥 Low Noise Type Solenoid Controlled Relief Valve
SBSG 40

先導式溢流閥 Pilot Operated Relief Valve
BG 41

電磁控制溢流閥 Solenoid Controlled Relief Valve
BSG 41

電磁流量控制閥 Solenoid Operated Throttle Valve
FKCS, FPR-MGKS 42
FMS-GO 42

流量控制閥 Operated Throttle Valve
FKC-G-A 43
FKC-G-B 43

高速響應比例閥

High Response Proportional Flow and Directional Control Valve

ELVDT-G02

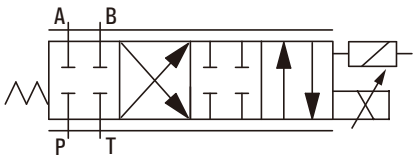

- 具有相當於電液伺服閥的高頻率響應功能。
- 用高輸出比例電磁閥直接驅動滑閥。
- 由差動變壓器進行的小反饋準確地決定滑閥位置。
- 放大器的電源關閉時或接線斷開時，返回全口區域的位置。(失效保險功能)
- 金屬製的滑閥與套筒，使用壽命長。

型號說明 ORDER CODES

ELVDT -	G02 -	H	5	20
型號 Model Name	閥門口徑 Thread Connection	作動方式 Action Mode	安全位置的流路狀態 Relieve Position Flow Path	額定流量 Rated Flow
ELVDT	G02 : 1/4"	H : 彈簧偏置型 H : Spring Biased Type	5 : 所有口關閉 5 : All Ports Closed	10 : 10 l/min 20 : 20 l/min 35 : 40 l/min 閥壓力下降7MPa (71kgf/cm^2) Pressure Drop 7MPa (71kgf/cm^2)

注意事項 HANDLING

1. 放大器與閥體在出廠時已相應調整過。
2. 滑閥軸線呈水平安裝。
3. 在3個油口使用時或通過流量多方向時，建議採用P→A→B→T的流向。(P→A比P→B的極限差壓高)
4. 試運行前請充分進行沖洗。
5. 本閥體與主機執行器的配管請使用鋼管，並請盡可能縮短鋼管尺寸。
6. 無需排出空氣。
7. 以礦物類操作油為標準，請使用R&O型和耐抗磨型ISOVG32、46、68的產品。請在黏度20～140mm^2/s、油溫30～60°C兩種條件範圍內使用。
8. 過濾精度請保持在NAS9級以內。
9. 放大器和閥體之間的電氣接線長度請在30m以內，電磁線圈採用 VCTF2mm^2 2蕊屏蔽線，差動變壓器採用 VCTF0.5mm^2 4蕊屏蔽線。
10. 分解閥體後，請於導座內注滿液壓油再行安裝。
    鎖緊力矩: 5～7N・M (51～71kgf・cm)

1. The amplifier and valve have been adjusted to match at the factory.
2. Install position: Horizontal.
3. In the case of 3-port applications and for the direction that throughflow is most common, use of the following flow is recommended P→A→B→T. P→A limit differentialpressure is greater than that of P→B.
4. Be sure to perform sufficient flushing before a testing run.
5. Use steel piping for this valve and the main actuator, and keep piping as shortas possible.
6. There is no air bleeding.
7. Mineral oil hydraulic operating fluid isstandard. Use an R&O type and wearresistant type of ISO VG32, 46, or 68 or equivalent.
8. Cleanness of the operating Oil should be apply to Nas 9 or cleaner level.
9. Electrical wiring between the amp and valve should be no longer than 30 meters. For the solenoid valve use VCTF 2mm^2 2-conductor shielded wire, and for the differential transformer use VCTF 0.5mm^2 4-conductor shielded wire.
10. After disassembling the valve, be sure to fill the inside of the guide with operatingfluid before reassembling.
    Tightening Torque : 5 to 7N・m (51 to 71kgf・cm)

規格 SPECIFICATION

型號 Model		ELVDT-G02-H510	ELVDT-G02-H520	ELVDT-G02-H535
最高使用壓力 P, A, B Max. Operational Pressure		32 MPa (327 kgf/cm^2)		
T口容許背壓 Allowable Back Pressure of T Port		2.5 MPa (25.5 kgf/cm^2)		
額定流量 (閥壓力下降7MPa (71kgf/cm^2) 時) Rated Flow (Pressure Drop 7MPa (71kgf/cm^2))		10 l/min	20 l/min	40 l/min
最大控制流量 Max. Operational Flow		22 l/min	35 l/min	50 l/min
極限閥壓力下降 Max. Pressrue Drop		32 MPa (327 kgf/cm^2)	21MPa (214 kgf/cm^2)	14 MPa (143 kgf/cm^2)
磁滯 Magnetic Hysteresis		＜ 0.5%		
階梯響應 (0→100%變位) Step Response ms (0→100% Displacement)		＜ 16 ms *		
頻率響應 (90°相位達10%變位) Frequency Response Hz (90° Phase Delay ±10% Displacement)		＞ 80 Hz		
中立點偏移 Center Drift	供給壓力 Supply Pressure	＜ 0.5% / FS (Δp=25 MPa)		
	油溫 Fluid Temperature	＜ 1.5% / FS (ΔT=40°C)		
過濾精度 Filtration Finenes		NAS9級以內		
使用油溫範圍 / 建議油溫範圍 Operating Fluid Temperature Range / Recommended Fluid Temperature Range		30～60°C		
防水係數 Waterproof		IP53		
重量 Weight		2.3 kg		

* 備註: 階梯響應和頻率響應是供給壓力7MPa (71kgf/cm^2)、油溫40°C(液壓油黏度40mm^2/s)的代表值。

* **Note: Step response is typical value for a supply pressure of 7MPa (71kgf/cm^2) and uid temperature of 40°C (kinematic viscosity: 40mm^2/s).**

性能曲線 PERFORMANCE CURVES

輸入電壓-流量 性能曲線
Input Voltage – Flow Rate Characteristics

ELVDT-G02-H520

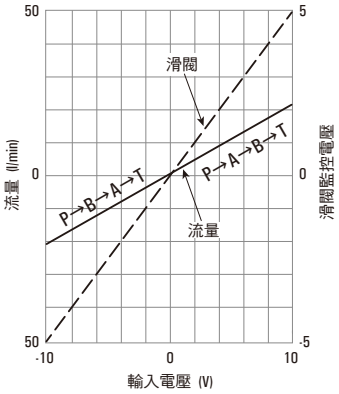

ELVDT-G02-H540

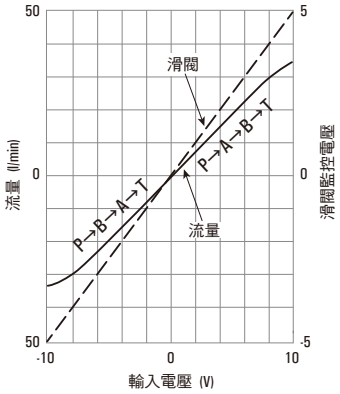

閥壓力差-流量 性能曲線
Valve Differential Pressure – Flow Rate Characteristics

ELVDT-G02-H520

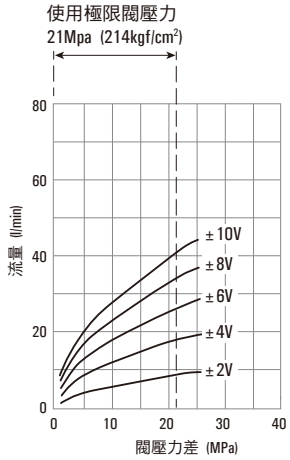

ELVDT-G02-H540

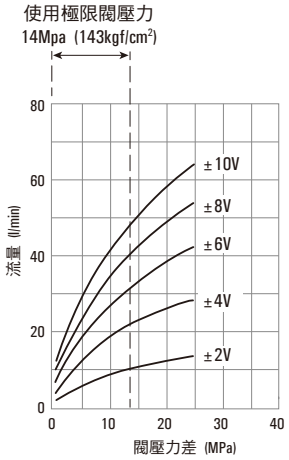

尺寸圖 DIMENSION (UNIT:MM)

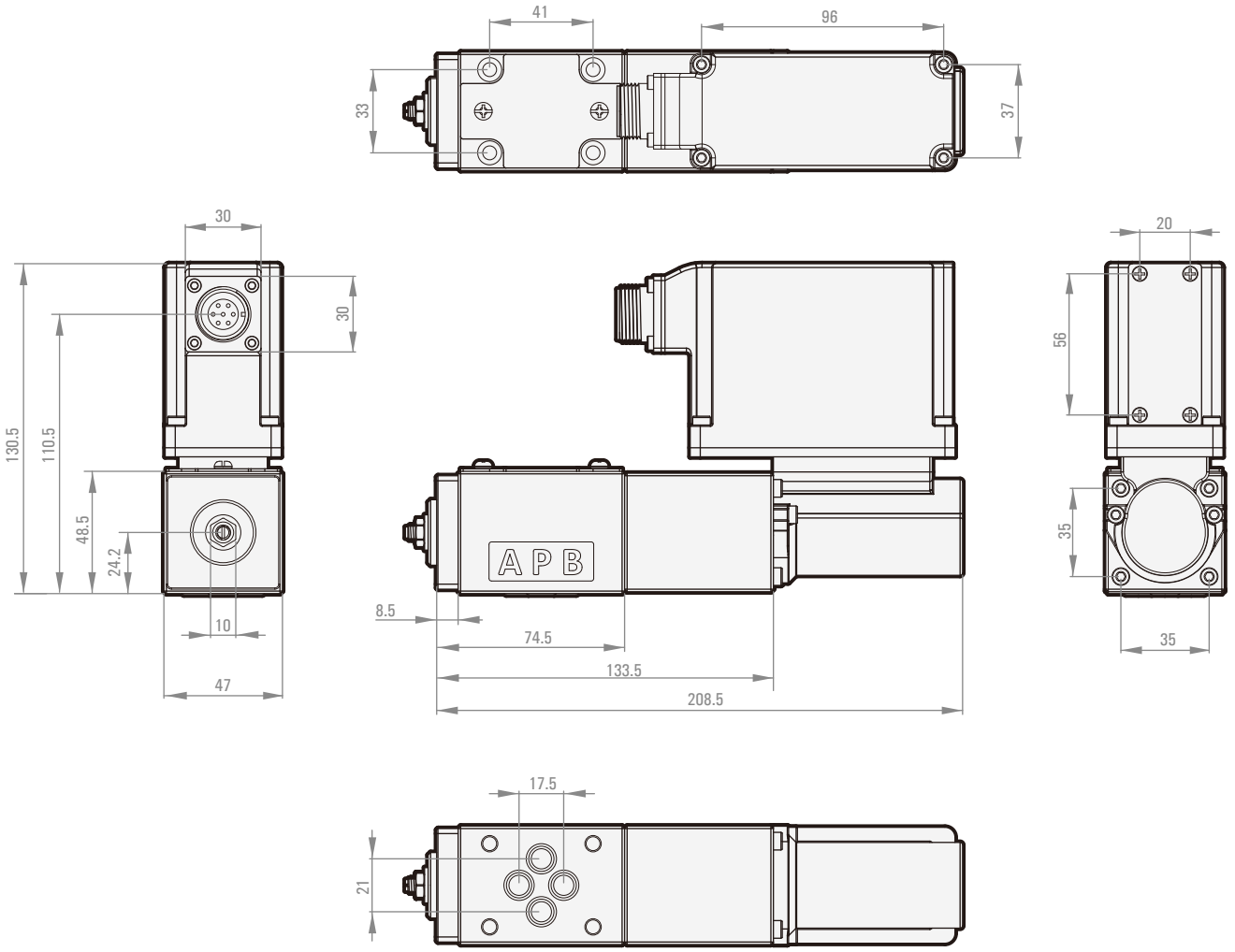

高速響應比例閥機板

Amplifier of High Response Proportional Flow and Directional Control Valve

ELVDT-H-MB-DC24

接線圖		
A	電源電壓 + Power supply voltage +	DC 24V
B	電源電壓 - Power supply voltage -	DC 24V
C	閥開關信號 Enable	DC 24V
D	輸入指令信號 + Input signal terminal +	+10V
E	輸入指令信號 - Input signal terminal -	-10V
F	監測信號輸出 Monitor terminal	
G	接地 Ground	

* D, E : 數位訊號輸入接腳 (0～10V)，E, F : 監測信號。
精密電子產品不可調整。
Terminal D, E : Input signal terminals (0～10V)
Terminal E, F : Monitor
Precise electronic product which should not be adjusted.

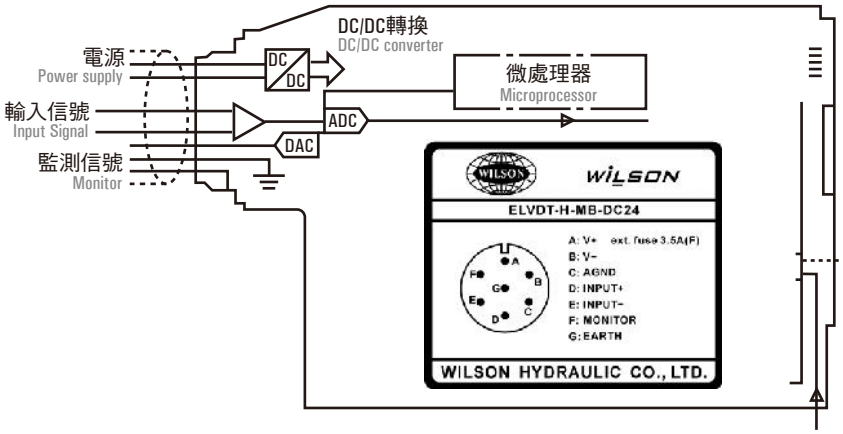

配電說明 INSTRUCTION

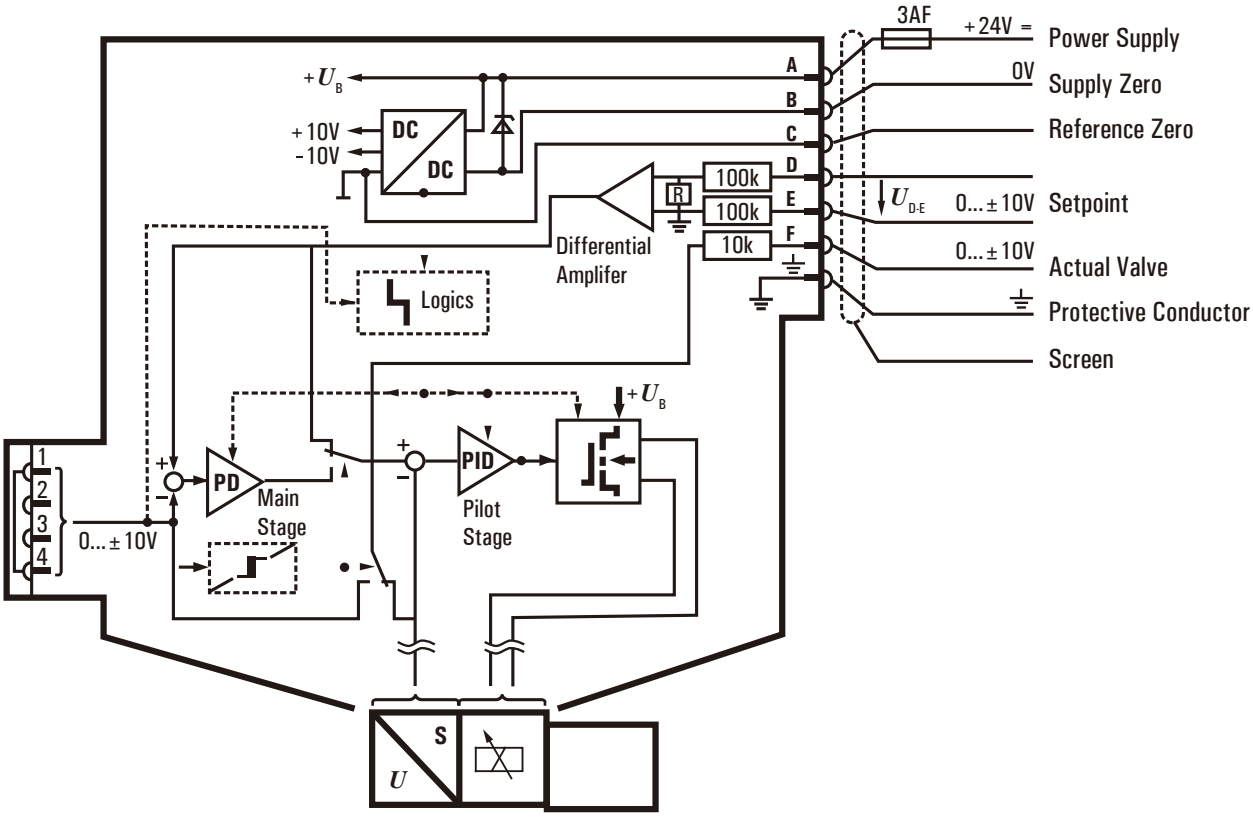

電液比例流量及換向控制閥

Electro-Hydraulic Proportional Flow & Directional Control Valve

EDFG-G01, G03, G04, G06, G10

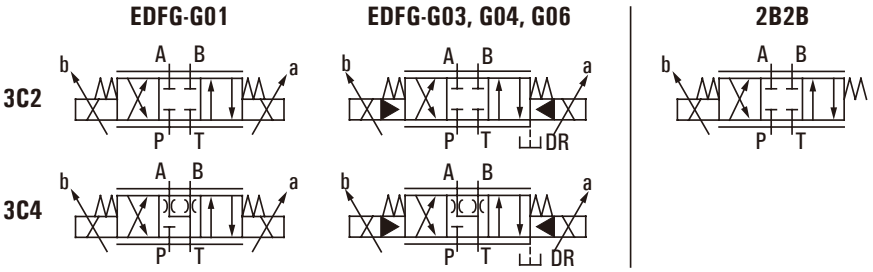

EDFG-G01

EDFG系列可變緩衝速度設定電磁方向閥，及最大流量調整機能速度。搭配專用電子放大器，調整速度及控制方向，達成油壓迴路簡單化與遠隔操作。
* 差動型用於油缸面積比1:2

EDFG-G03, G04, G06, G10

型號說明 ORDER CODES

EDFG -	G03 -	3C2 -	XY*
型號 Model Name	閥門口徑 Thread Connection	心軸形式 Spool Type	洩油形式 Drain Type
EDFG	G01 : 1/4" G03 : 3/8" G04 : 1/2" G06 : 3/4" G10 : 1-1/4"	3C2 3C4 2B2B	XY : 外部引導，外部洩油 無記號 : 內部引導，內部洩油 XY : external pilot and external drain none : internal pilot and internal drain

* EDFG-G01 無此選項
* EDFG-G01 is not applicable* EDFG-G01 is not applicable

注意事項 HANDLING

1. 排出空氣：為了進行穩定的流量控制，首次使用時要扭鬆排氣口排出空氣。
2. T口配管：配管時請考慮T口 (G03、G04、G06型為控制T口)能經常保持配管內充滿液壓油。
3. 手動調整螺栓：首次調整或因電器故障等原因閥中無輸入電流時，可以將手動調整螺栓向右轉動，使閥的流量增加。平時，必須使手動調整螺栓全部扭回左方並扭緊。
4. 閥的安裝方式：閥芯軸線成水平安裝。
5. 與壓力補償的組合：需要進行更高精度的流量控制時，或用於高壓時，推薦與壓力補償組件的組合。
6. 壓力控制：(EDFG-G03, G04, G06) 超過92kgf/cm^2 (9MPa)時，請使用疊加型P口減壓閥 (MBRV-02-P-1)設定壓力為20kgf/cm2 (2MPa)
7. 在減速時需要大的制動壓力的系統，或在使用直立油缸的系統中，請設置平衡閥等。另外，使用單閥杆油缸使閥杆出口通分減速時，請在閥杆側設置平衡閥。
8. 液壓油的清潔度在NAS9級內。
9. 操作油選擇：
   油溫: -20 to 70°C　黏度: 12 to 400mm^2/s
   推薦黏度範圍: 15 to 60mm^2/s

1. Air Bleeding : In order to ensure stable control, loosen the air vent and bleed air from the valve before starting operation.
2. T Port Piping : When configuring piping, ensure that the T port (pilot valve T port for the G03, G04, and G06 sizes) is filled with operational fluid.
3. Manual Adjusting Screw : For the initial adjustment or when there is no input current to the valve due to an electrical problem or some other reason, the valve can be operated and valve pressure can be increased by rotating the manual adjustment screw clockwise (rightward). Normally, the manual adjusting screw should be rotated back fully to the left (counterclockwise).
4. Valve Mounting Orientation : Install the valve so the spool axis line is horizontal.
5. Combining with a Pressure Compensation Valve : Use of the optional pressure compensation kit is recommended when higher precision flow rate control is required or in high-pressure applications.
6. If pilot pressure exceeds 92 kgf/cm^2 (9 MPa) use a modular type P port reduction valve (MBRV-02-P-1) at a setting of 20 kgf/cm^2 (2 MPa) (only for EDFG-G03, G04, G06).
7. On a system that requires large brake pressure during deceleration or a system that uses a vertical cylinder, equip a counter balance valve. Use a single rod, if the rod exit is not slowed sufficiently, use a counter balance valve on the rod.
8. Maintain hydraulic operational fluid contamination so it is at least Class 9.
9. Use an operating fluid that conforms to the both of the following.
   Oil temperature: -20 to 70°C.　Viscosity: 12 to 400mm^2/s.
   The recommended viscosity range is 15 to 60mm^2/s.

規格 SPECIFICATION

型號 Model	EDFG-G01	EDFG-G03	EDFG-G04	EDFG-G06
最大作動壓力 Max. Operational Pressure	225 kgf/cm^2 (25 MPa)			
額定流量 Rated Flow	10/25 l/min	40/80 l/min	140 l/min	250 l/min
引導壓力 Pilot Pressure	-	>10 kgf/cm^2 (1.0 MPa)	>10 kgf/cm^2 (1.0 MPa)	>10 kgf/cm^2 (1.0 MPa)
引導流量 Pilot Flow	-	>2 l/min	>3 l/min	>5 l/min
T口容許背壓 Allowable Back Pressure of T port	25.5 kgf/cm^2 (2.5 MPa)	25.5 kgf/cm^2 (2.5 MPa) 214 kgf/cm^2 (21 MPa)		
額定電流 Rated Current	850 mA			
線圈阻抗 Coil Resistance	20Ω (20°C)			
磁滯 Magnetic Hysteresis	<5%			
再現性 Repeatability	0.04 sec	0.05 sec	0.08 sec	0.1 sec
放大器型號 Amplifier No.	TW9820 series			
重量 Weight	2.2 kg	6.6 kg	7.8 kg	12.9 kg

* 備註:
1. 是 P口→A口 和 P口→B口 的壓力下降量，當△P =1.0MPa (10kgf/cm^2)時的數值。
2. 各口之間通過流量的最大值。
3. 控制口、油箱口和回油口的壓差。
4. 流量零到額定流量的反應時間假設為 0.1秒時
5. 該數據為使用本公司專用功率放大器時的數值 (TW9820-2 附顫震功能)。
6. 反應時間在操作壓力 143kgf/cm^2 (14MPa)， 油溫40°C， 操作油黏度 40mm^2/s。

* **Note:**
1. Value when pressure drop volume to P→A and P→B is △P = 10 kgf/cm^2 (1.0 MPa).
2. Indicates maximum throughput volume value between each port.
3. Indicates differential between the pilot port and tank port, or drain port.
4. Value when 0.1 second is assumed for the response time from zero to the rated flow volume.
5. Value when a WILSON amplifier TW9820-2 is used.
6. Response time is typical value for a supply pressure of 143 kgf/cm^2 (14 MPa) and fluid temperature of 40°C (kinematic viscosity: 40 mm^2/s).

附件 BUNDLED ACCESSORIES

型號 Model	安裝螺絲 Mounting Bolts	數量 Q'ty
EDFG-G01	M5 x L45	4
EDFG-G03	M6 x L35	4
EDFG-G04	M6 x L45	2
	M10 x L50	4
EDFG-G06	M120 x L60	6

性能曲線 PERFORMANCE CURVES

輸入電流-流量 性能曲線
Input Current – Flow Rate Characteristics

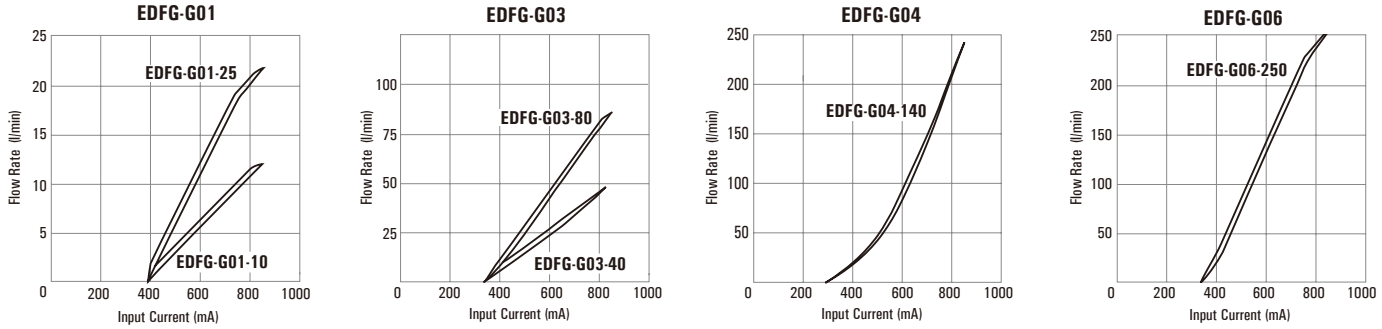

壓力-流量 性能曲線
Input Current – Flow Rate Characteristics

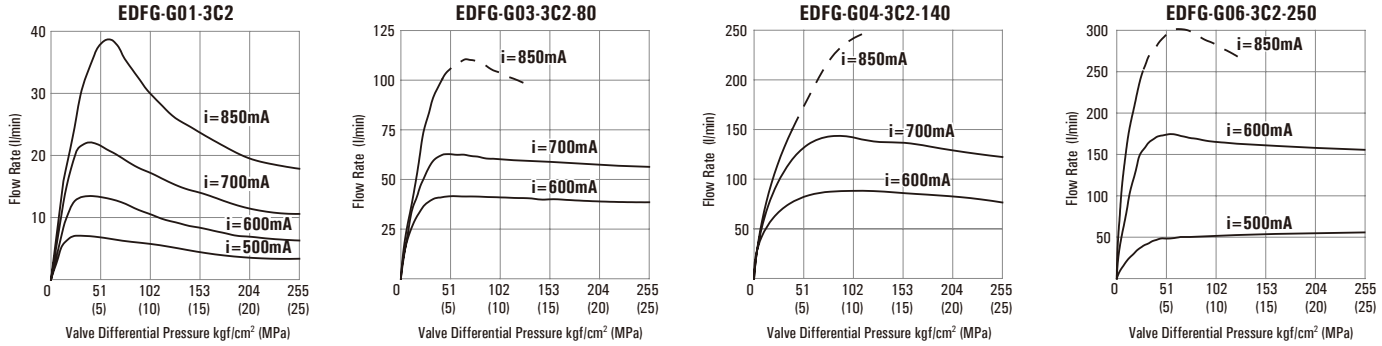

* 操作油黏度 32mm²/s
Hydraulic Operating Fluid Viscosity 32mm²/s

尺寸圖 DIMENSION (UNIT:MM)

EDFG-G01

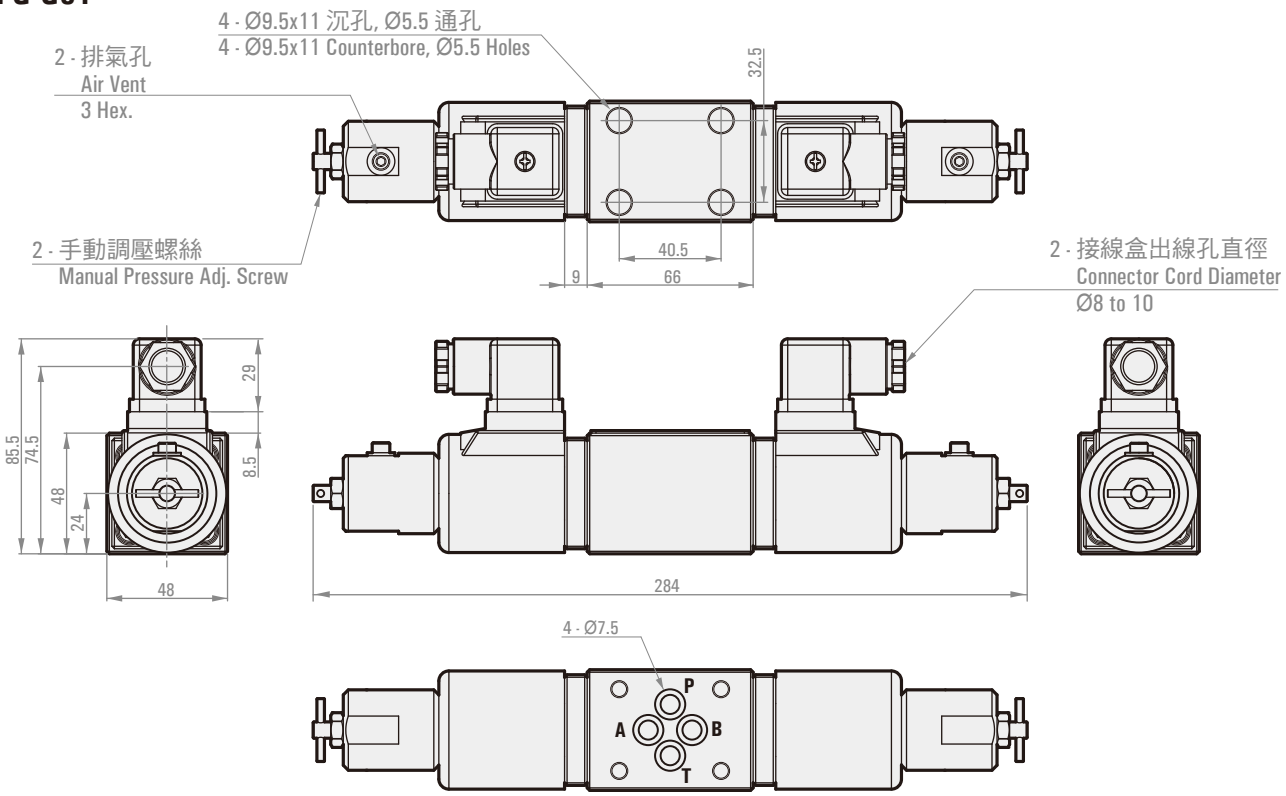

尺寸圖 DIMENSION (UNIT:MM)

EDFG-G03

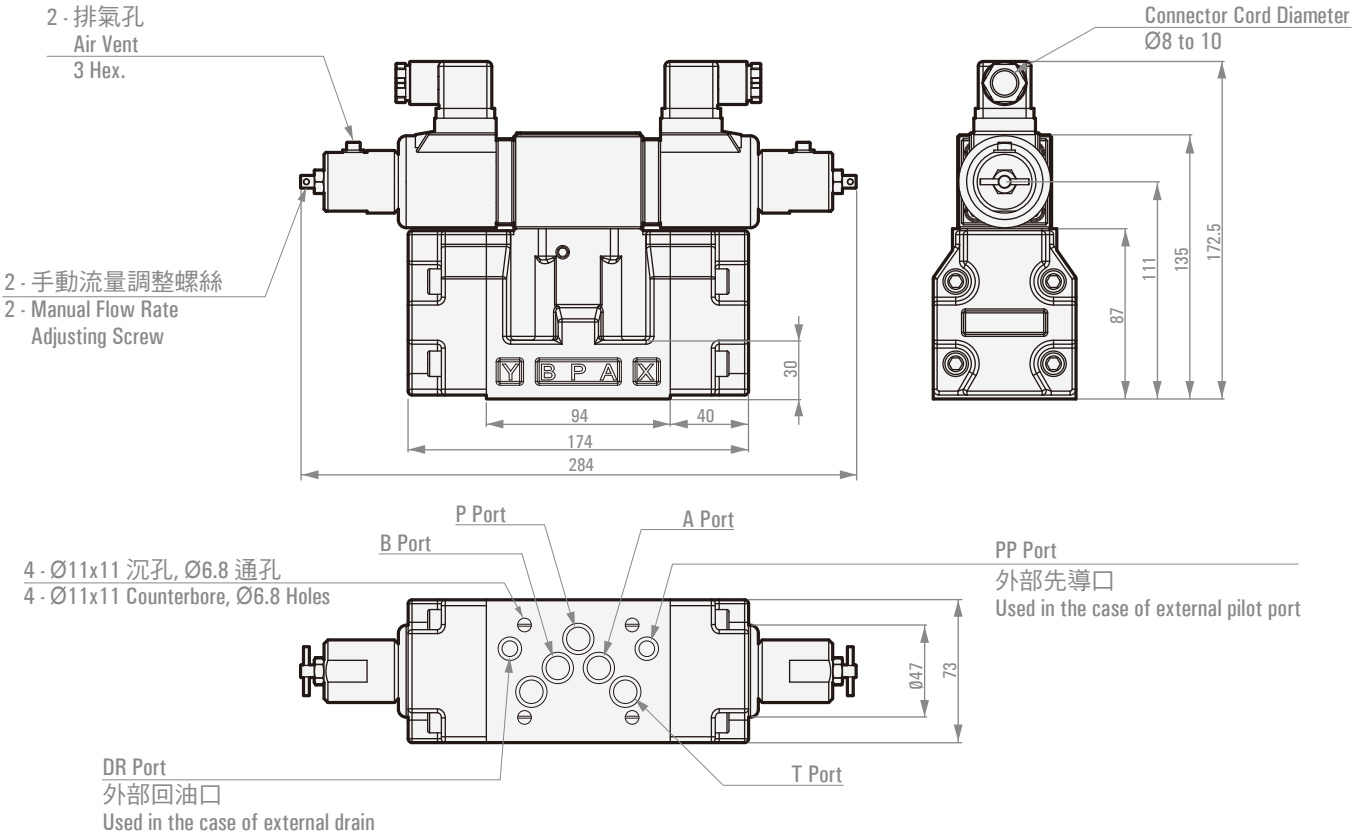

EDFG-G04

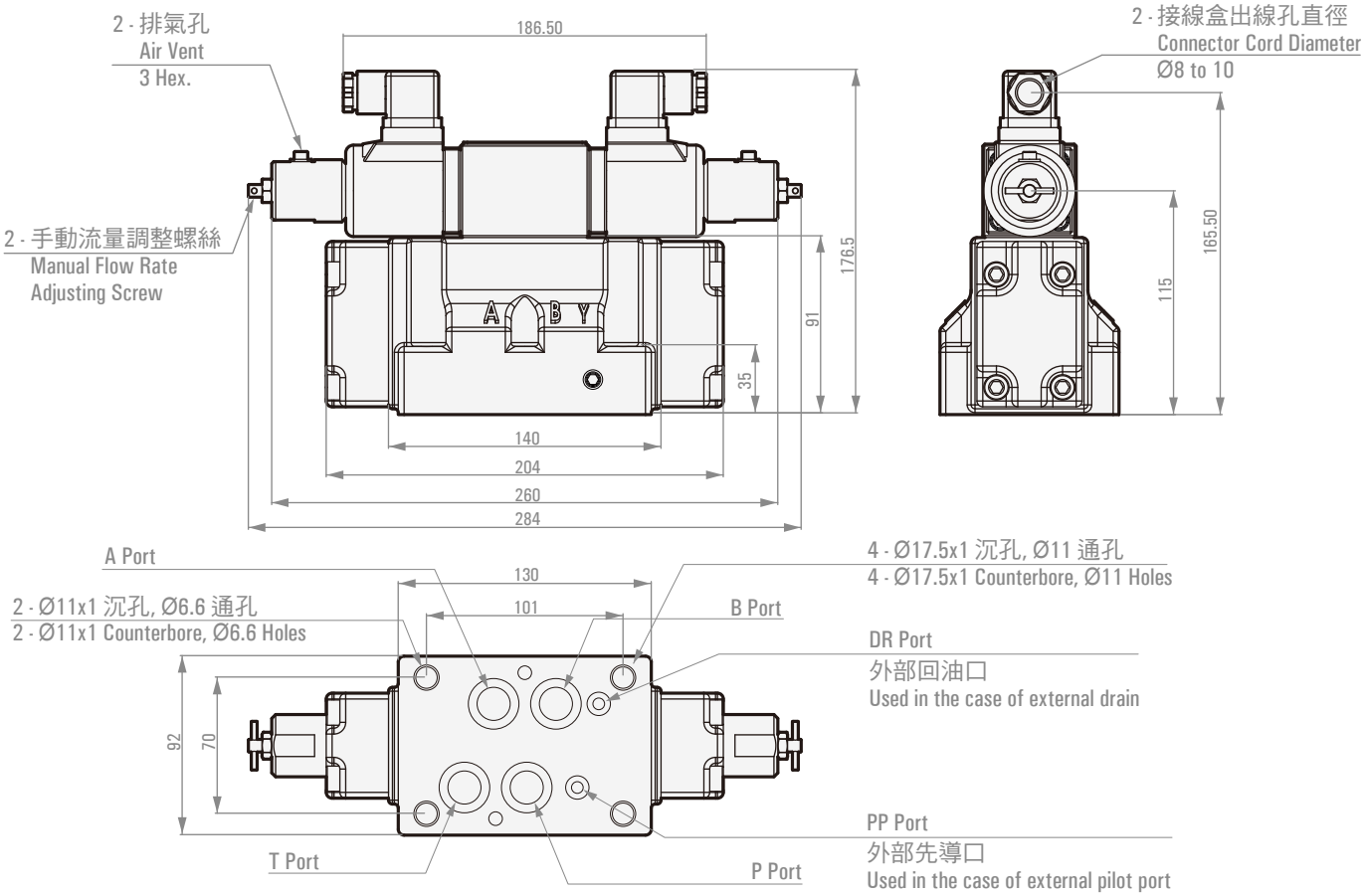

尺寸圖 DIMENSION (UNIT:MM)

EDFG-G06

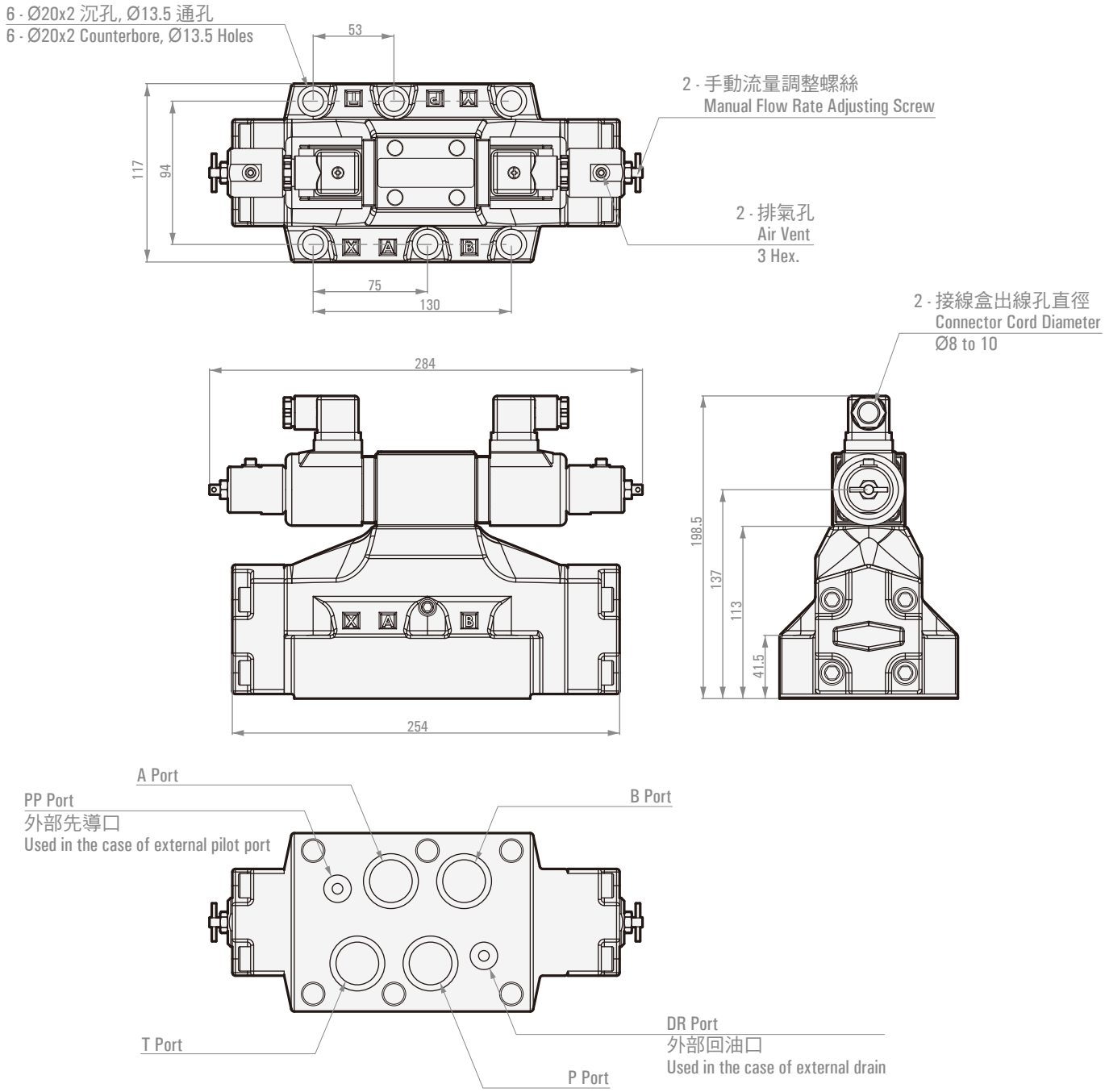

手動調整部
Manual Adjustment Section
(EDFG-G03, G04, G06, G10)

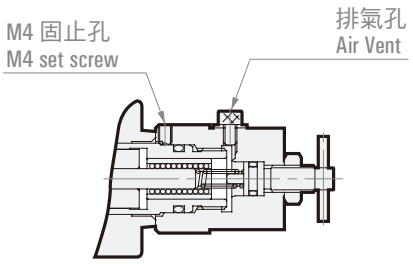

剖面圖 CROSS SECTIONAL VIEW

EDFG-G03

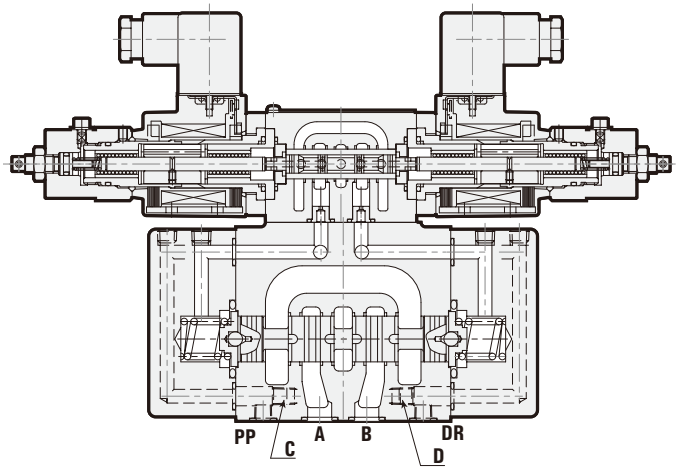

變換後的方式		各部位的六角槽旋塞
液壓控制	內部	C部位改成PP口
	外部	PP口改到C部位
洩油	內部	D部位改成DR口
	外部	DR口改到D部位

EDFG-G04

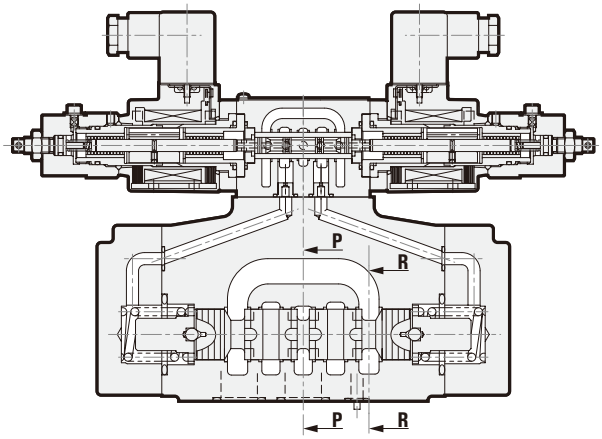

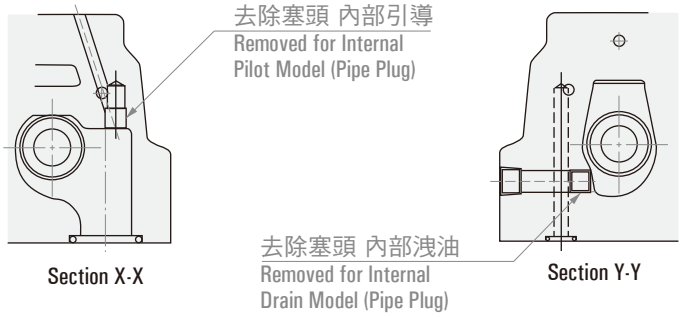

EDFG-G06

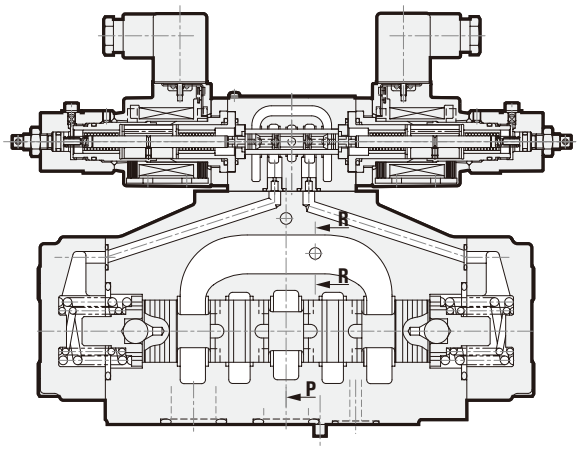

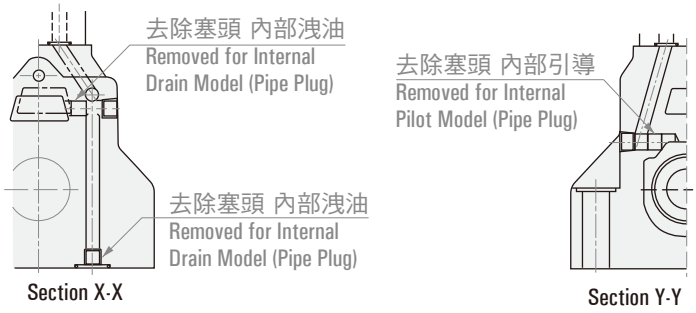

油壓電磁比例壓力&流量感應複合閥

Electro-Hydraulic Proportional Relief & Flow Control Valve

EFBG-03, 06

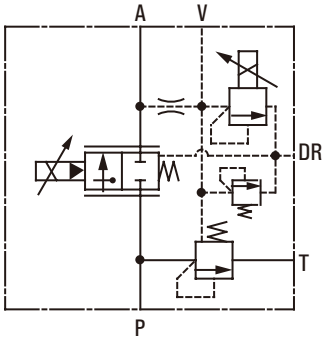

型號說明 ORDER CODES

EFBG -	03 -	125 -	C -	R2
型號 Model Name	閥門口徑 Thread Connection	最大流量 Max. Flow	最大操作壓力 Max. Operational Pressure	壓力控制範圍 Pressure Control Range
EFBG	03 : 3/8" 06 : 3/4"	60/125 l/min 250 l/min	C : 140 kgf/cm^2 H : 255 kgf/cm^2	R1 : 12.2～71 kgf/cm^2 (1.2～7MPa) R2 : 14.3～143 kgf/cm^2 (1.4～14MPa) R3 : 16.3～214 kgf/cm^2 (1.6～21MPa) R4 : 16.3～255 kgf/cm^2 (1.6～25MPa)

注意事項 HANDLING

1. 排出空氣：為了進行穩定的流量控制，首次使用時要扭鬆排氣口排出空氣。
2. 手動調整螺栓：首次調整或因電器故障等閥中無輸入電流時，可以透過手動調整螺栓向右轉動增加流量。平時，必須把螺栓全部旋回左邊，並請鎖緊螺母。
3. 回油管儘量減少壓力，單獨使用一條管路直接插入油箱油面以下。
4. 安全閥的設定壓力：有電磁比例液控溢流閥的安全閥設定為最低壓力（3.5MPa以下），帶電磁閥比例液控溢流閥的安全閥是在最高壓力上加算1.5MPa的設定壓力，實際使用時，請設定與使用液壓迴路一致的壓力。
5. 壓力控制時最少溢流：當到閥體T口的溢流流量少，設定壓力有時會不穩定，因此公稱直徑03, 06時的溢流流量請使用 10 l/min 以上。
6. 閥的安裝形式：帶電磁比例液控溢流閥的本閥垂直面安裝，如果採取液控溢流閥的線圈部分朝下的形式來安裝時，液控溢流閥的空氣不能順利排出，因此，不宜採用這種形式安裝。
7. 操作油選擇：
   油溫: -20 to 70°C　黏度: 12 to 400mm^2/s
   推薦黏度範圍: 15 to 60mm^2/s

1. Air Bleeding : In order to ensure stable control, loosen the air vent and bleed air from the valve before starting operation.
2. Manual Adjusting Screw : For the initial adjustment or when there is no input current to the valve due to an electrical problem or some other reason, pressure or flow rate can be increased by rotating the manual adjustment screw clockwise (rightward). Normally, this adjusting screw should be returned completely to its original position and secured with the lock nut.
3. Please minimize the oil pressure in the return line, and make sure that the output of independent tube must be under the oil surface in the tank.
4. Safety Valve Setting Pressure : For a safety valve without an electro-hydraulic proportional pilot relief valve, safety valve pressure is set to minimum pressure 35.7kgf/cm^2 (3.5MPa max.) In the case of a safety valve with an electrohydraulic proportional pilot relief valve, the safety valve setting pressure is set to the minimum adjustment pressure plus 15.3kgf/cm^2 (1.5MPa). When actually using the valve, adjust in accordance with hydraulic circuit pressure.
5. Minimum Relief Flow Rate During Pressure Control : Setting pressure can become unstable when the relief flow rate to the valve's T port is small. Because of this, use a relief flow rate of at least 10 l/min with a nominal diameter of 03 or 06.
6. Valve Mounting Orientation : When an electro-hydraulic proportional pilot relief valve main valve is mounted on a vertical surface with the pilot relief valve part facing downwards make it difficult to bleed air from the pilot relief valve. Because of this, you should not use this type of mounting orientation.
7. Use an operating fluid that conforms to the both of the following.
   Oil temperature: -20 to 70°C.　Viscosity: 12 to 400mm^2/s.
   The recommended viscosity range is 15 to 60mm^2/s.

規格 SPECIFICATION

型號 Model		EFBG-03	EFBG-06
最大操作壓力 Max. Operational Pressure		255 kgf/cm^2 (25 MPa)	
最大流量 Max. Flows		60/125 l/min	250 l/min
流量系統 Flowing System	流量調整範圍 Flow Adjusting Range	1～60 l/min 1～125 l/min	5～250 l/min
	閥門內部阻抗 Internal Resistance of This Valve	5.1 kgf/cm^2 (0.5 MPa) ＜note1＞	7.1 kgf/cm^2 (0.7 MPa) ＜note1＞
	定額電流 Rated Current	800 mA	
	線圈阻抗 Coil Resistance	20Ω (20°C)	
	磁滯 Magnetic Hysteresis	＜3% ＜note2＞	
	再現性 Repeatability	＜1%	
壓力系統 Pressure System	壓力控制範圍 Pressure Control Range	R1 : 12.2～71 kgf/cm^2 (1.2～7 MPa) R2 : 14.3～143 kgf/cm^2 (1.4～14MPa) R3 : 16.3～214 kgf/cm^2 (1.6～21MPa) R4 : 16.3～255 kgf/cm^2 (1.6～25MPa)	
	最大操作壓力 Max. Operational Pressure	C : 140 kgf/cm^2 H : 255 kgf/cm^2	
	額定電流 Rated Current	C : 700 mA H : 800 mA	
	線圈阻抗 Coil Resistance	20Ω (20°C)	
	磁滯 Magnetic Hysteresis	＜3%	
	再現性 Repeatability	＜1%	
放大器型號 Amplifier No.		TW9820 series	
重量 Weight		14 kg	28 kg

* 備註:
1. 為閥體P口和A口之間的壓力差。
2. 該數據為使用本公司專用功率放大器時的數值 (TW9820-2 附顫震功能)。
3. 該規格適用帶電磁比例液控溢流閥。
4. 無電磁比例液控溢流閥時，最高調整壓力為255kgf/cm^2 (25 MPa)。出廠時設定為最低輸出35.7kgf/cm^2 (3.5MPa max.)以下。請設定與使用液壓迴路一致的壓力。

* Note:
1. Indicates the pressure differential between the valve P port and A port.The left chart is complied with our standard electronic control circuit board TW9820-2, and is the single valve test result.
2. Value when a WILSON amplifier TW9820-2 is used (with dithering).
3. These specifications apply to valves that include an electro-hydraulic proportional pilot relief valve.
4. The maximum adjustment pressure is 255kgf/cm^2 (25MPa max.) for a valve that does not include an electro-hydraulic proportional pilot relief valve. Factory default is minimum output 35.7kgf/cm^2 (3.5MPa max.) Set this value in accordance with the pressure of the hydraulic circuit being used.

性能曲線 PERFORMANCE CURVES

輸入電流-流量 性能曲線
Input Current - Flow Rate Characteristics

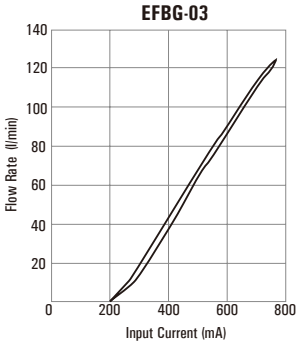

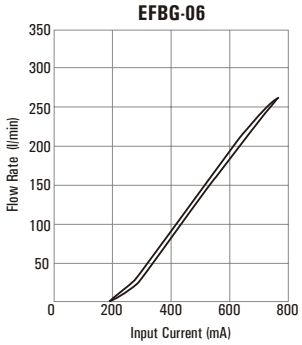

* 操作油黏度 32mm^2/s
Hydraulic Operating Fluid Viscosity 32mm^2/s

油溫-控制流量 性能曲線
Fluid Temperature - Control Flow Rate Characteristics

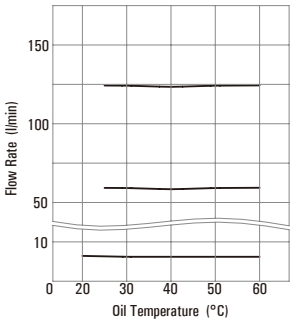

Load Pressure : 102kgf/cm^2 (10Mpa)
Operational Fluid : VG32
Fluid Temperature : 40°C
Value when a WILSON amplifier TW9820-2 is used. (with dithering)

壓力-控制流量 性能曲線
Pressure - Control Flow Rate Characteristics

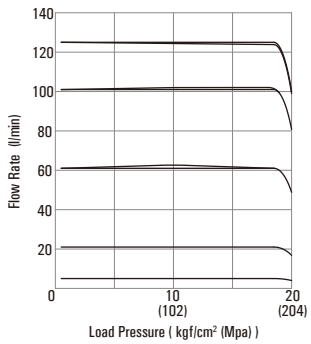

Electro-hydraulic Proportional Pilot
Relief Valve Setting Pressure : 214.2kgf/cm^2 (21Mpa)
Operational Fluid : VG32
Fluid Temperature : 40°C
Value when a WILSON amplifier TW9820-2 is used. (with dithering)

附件 BUNDLED ACCESSORIES

型號 Model	安裝螺絲 Mounting Bolts	數量 Q'ty
EFBG-03	M10 x L75	2
	M10 x L90	2

型號 Model	安裝螺絲 Mounting Bolts	數量 Q'ty
EFBG-06	M16 x L100	2
	M16 x L135	2

尺寸圖 DIMENSION (UNIT:MM)

EFBG-03-125

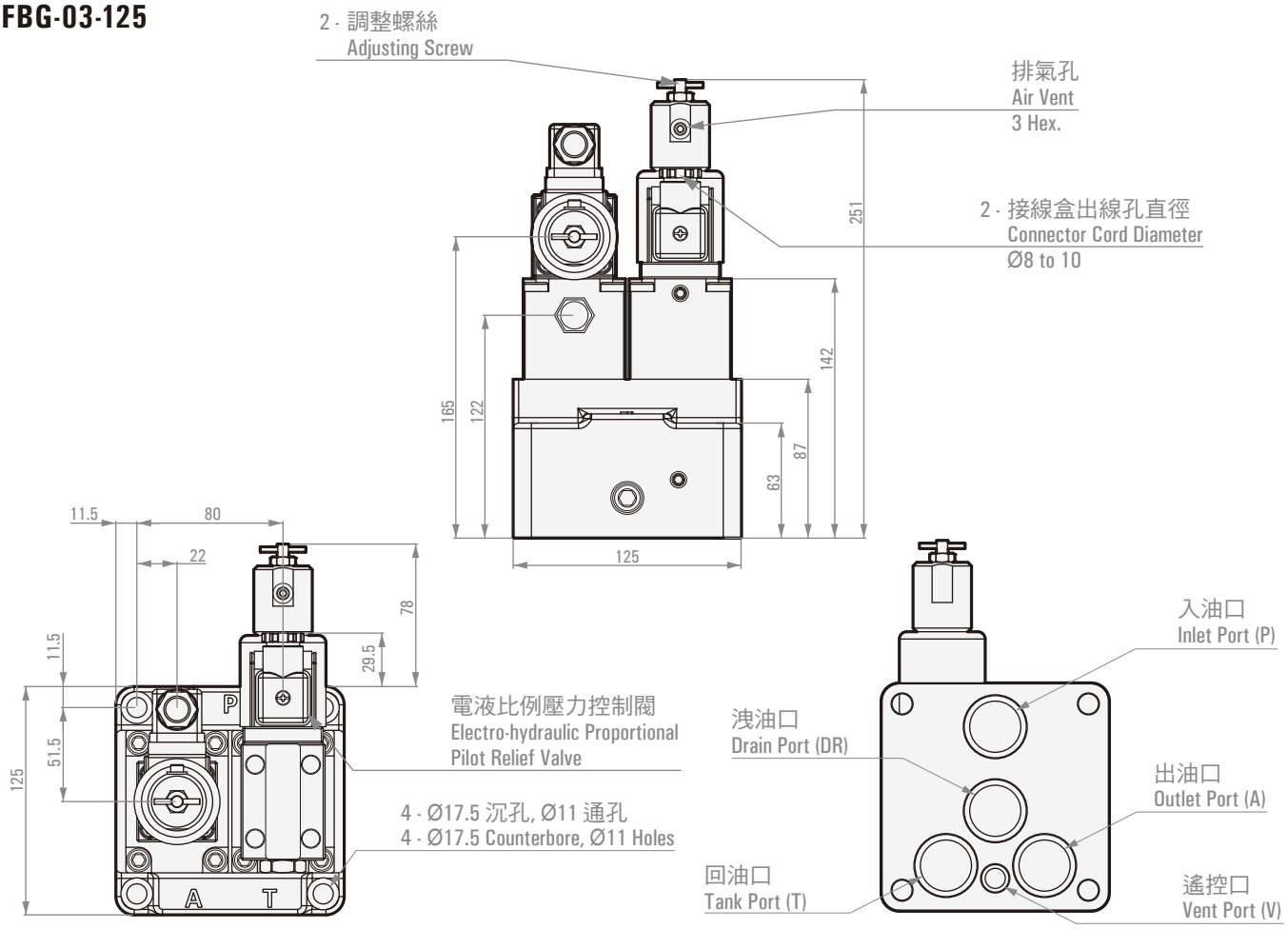

底版圖 Sub-Plates EFBG-03-125

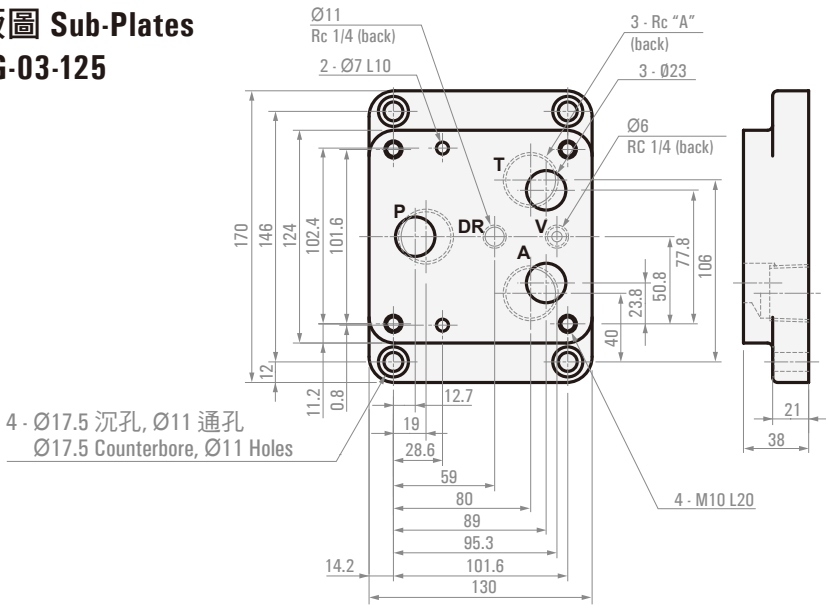

型號 Model	MSP-03Y	MSP-03Z
A	3/4	1

尺寸圖 DIMENSION (UNIT:MM)

EFBG-06

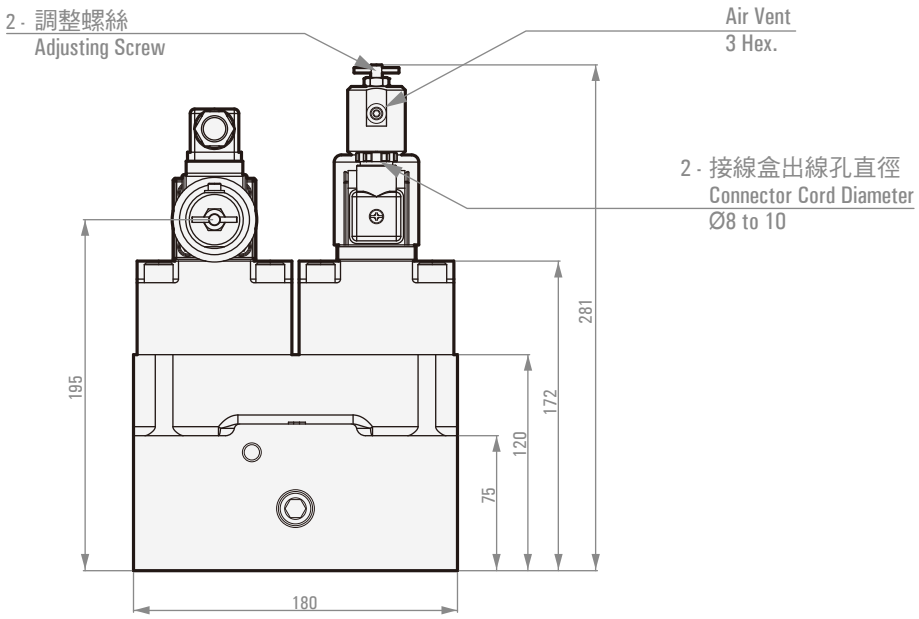

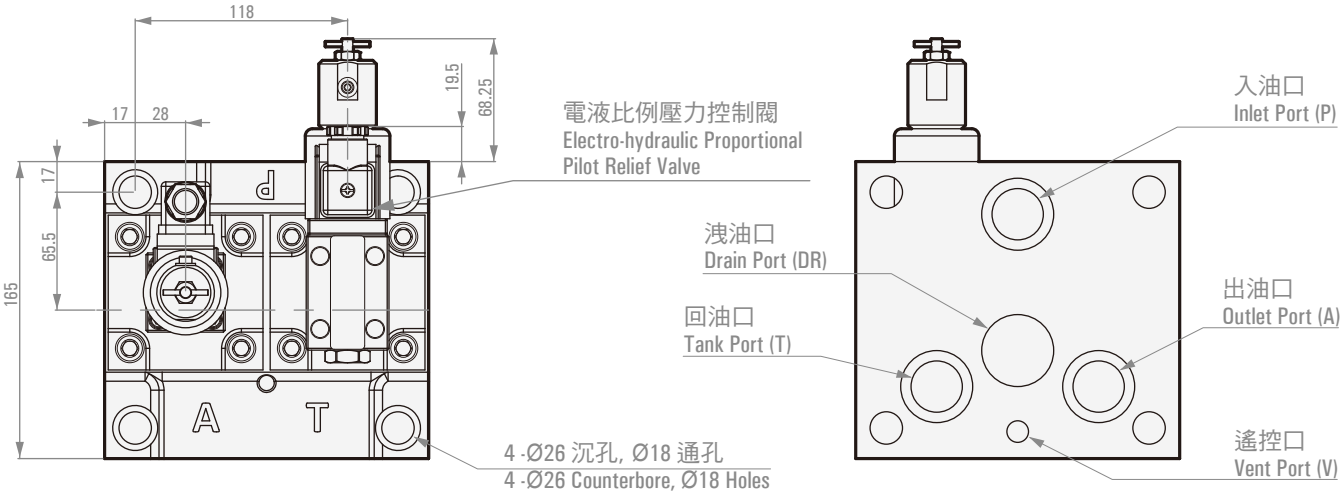

底版圖 Sub-Plates

EFBG-06

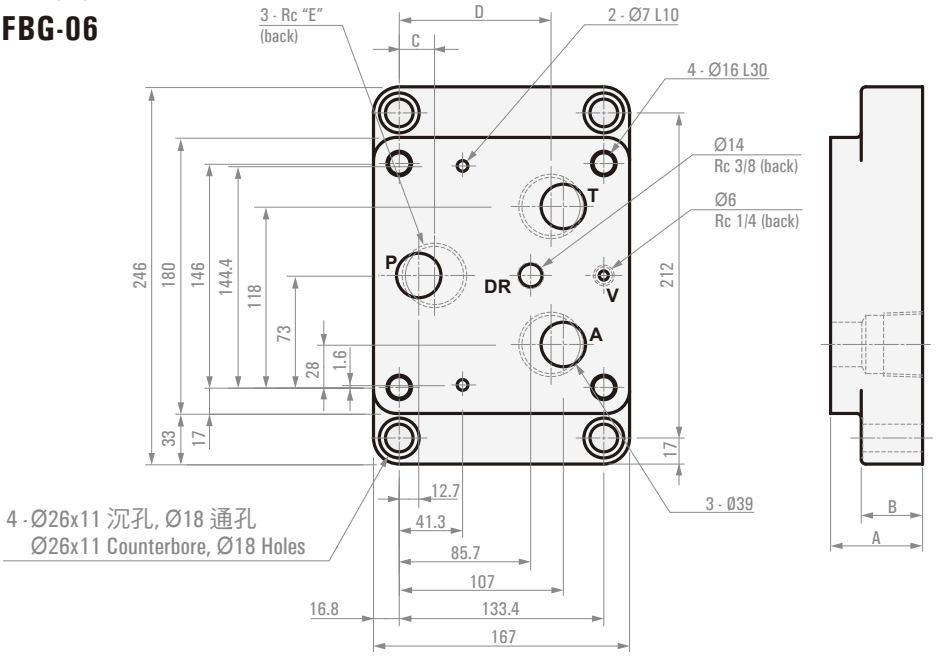

型號 Model	MSR-06X	MSR-06Y
A	95	60
B	25	40
C	16	23
D	107	99
E	1	5/4

疊加式電磁比例減壓閥

Modular Type Electro-hydraulic Proportional Reducing Valve

EOG-G01

P口控制
P Port Control

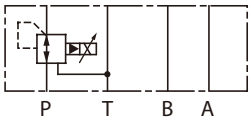

B口控制
B Port Control

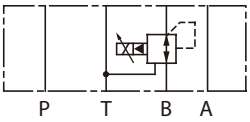

電磁比例減壓閥採用容易使用的疊加閥優點，對液壓系統內的壓力，與輸入電流成比例地進行減壓控制，最適合用於磨床工件夾具、壓力的連續比例控制等工作機台在內的小型液壓系統。另外，由於備有溢流功能，所以具有優良的壓力響應性能。

型號說明 ORDER CODES

EOG -	G01 -	P	1
型號 Model Name	閥門口徑 Thread Connection	控制口 Control Port	壓力調整範圍 Pressure Adjusting Range
EOG	G01 : 1/4"	P : P Port B : B Port	B : 3.1～25.5 kgf/cm^2 (0.3～2.5 MPa) 1 : 4～71 kgf/cm^2 (0.4～7 MPa) 2 : 6～143 kgf/cm^2 (0.6～14 MPa)

規格 SPECIFICATION

型號 Model	EOG-G01
最大操作壓力 Max. Operational Pressure	255 kgf/cm^2 (25 MPa)
最大流量 Max. Flows	30 l/min
壓力調整範圍 Pressure Adjusting Range	B : 3.1～25.5 kgf/cm^2 (0.3～2.5 MPa) 1 : 4～71 kgf/cm^2 (0.4～7 MPa) 2 : 6～143 kgf/cm^2 (0.6～14 MPa)
T口容許背壓 Allowable Back Pressure of T port	＜25 kgf/cm^2 (＜2.5 MPa)
定額電流 Rated Current	850 mA
線圈阻抗 Coil Resistance	20Ω (20° C)
磁滯 Magnetic Hysteresis	＜3% ＜note1＞
放大器型號 Amplifier No.	TW2085
重量 Weight	3.6 kg

* **備註:** 該數據為使用本公司專用功率放大器時的數值 (TW2085附顫震功能)。
* **Note:** Value when a WILSON amplifier TW2085 is used (with dithering).

注意事項 HANDLING

1. 排出空氣：為了進行穩定的壓力控制，首次使用時要扭鬆排氣口排出空氣，並使電磁閥內注滿液壓油。
2. 手動壓力調整螺栓：初次調整或因電器故障等原因閥中無輸入電流時，可以將手動調整螺栓向右轉動，使壓力上昇。平時，必須將手動調整螺栓全部扭回左方並扭緊。
3. 最低控制壓力：由於是內部洩油型式，所以最低控制壓力受到T口背壓影響。
4. 負荷容量：負荷容量 (閥OUT側容量)設置0.5L以上。
5. 操作油選擇：
   油溫: -20 to 70°C　黏度: 12 to 400mm^2/s
   推薦黏度範圍: 15 to 60mm^2/s

1. Air Bleeding : To enable proper pressure control, loosen the air vent when starting up the pump in order to bleed any air from the pump, and fill the inside of the solenoid with hydraulic operating fluid.
2. Manual Pressure Adjusting Screw : For the initial adjustment or when there is no input current to the valve due to an electrical problem or some other reason, valve pressure can be increased by rotating the manual adjustment screw clockwise (rightward). Normally, the manual adjusting screw should be rotated back fully to the left (counterclockwise) and secured with the lock nut.
3. Minimum Control Pressure : Since this valve has an internal drain system, T port back pressure has an effect on minimum control pressure.
4. Load Capacity : Make load capacity (valve OUT side capacity) at least 0.5L.
5. Use an operating fluid that conforms to the both of the following.
   Oil temperature: -20 to 70°C.　Viscosity: 12 to 400mm^2/s.
   The recommended viscosity range is 15 to 60mm^2/s.

性能曲線 PERFORMANCE CURVES

輸入電流-壓力 性能曲線
Input Current – Pressure Characteristics

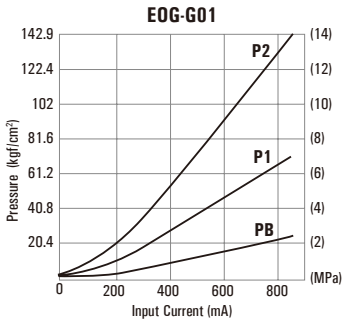

流量-壓力 性能曲線
Flow Rate – Pressure Characteristics

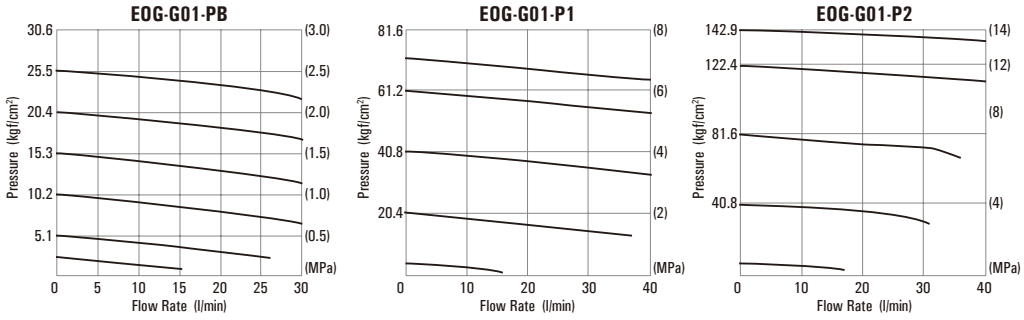

油溫 性能曲線
Fluid Temperature Characteristics

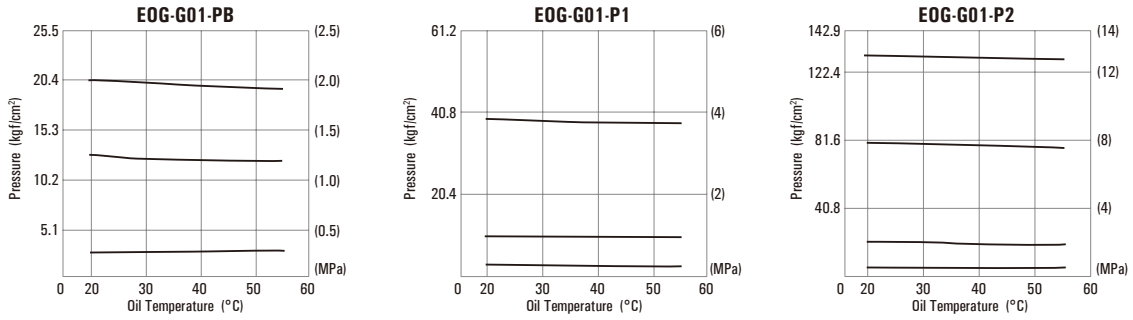

* 操作油黏度 32mm²/s
Hydraulic Operating Fluid Viscosity 32mm²/s

尺寸圖 DIMENSION (UNIT:MM)

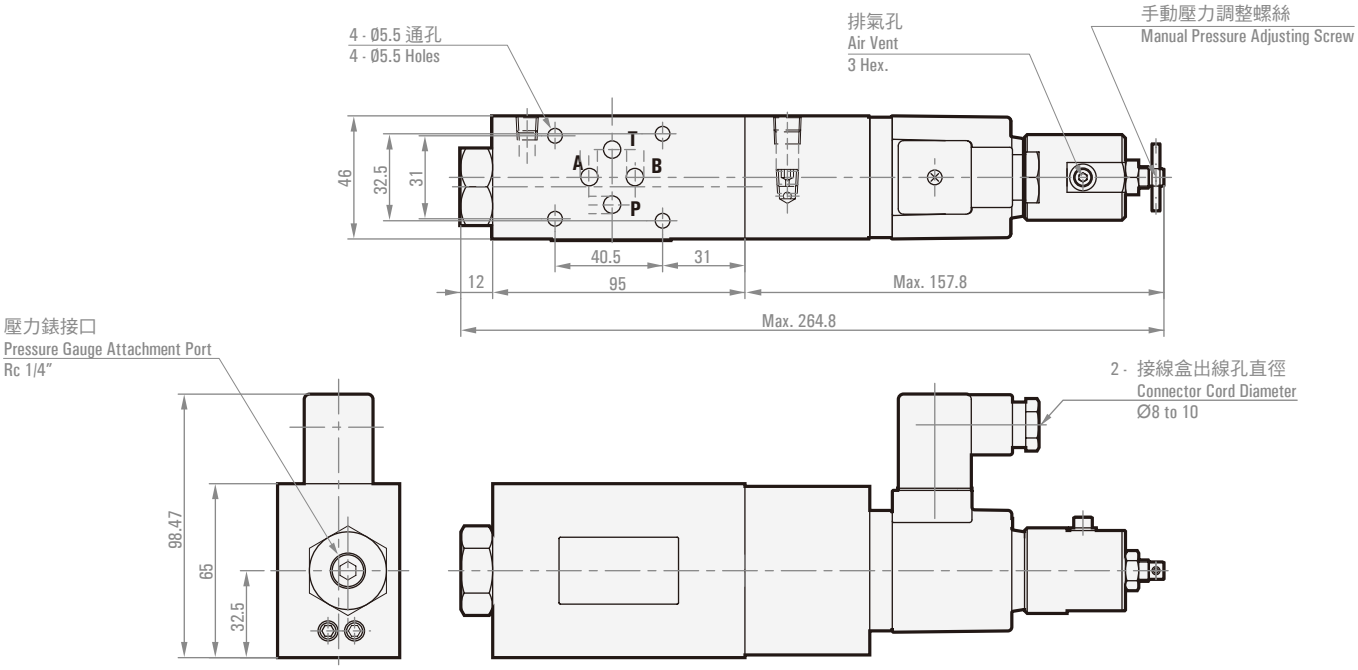

電液比例先導溢流閥

Electro-Hydraulic Proportional Pilot Relief Valve

EDG-G01

帶安全閥
With safety valve

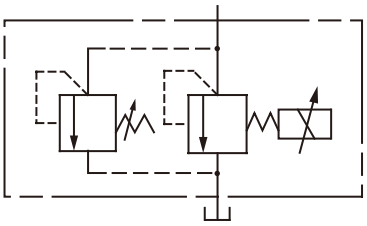

不帶安全閥
Without safety valve

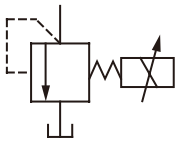

EDG-G01是由一小型直流電磁鐵與一直動式溢流閥組成。它可以用作小流量液壓系統的電液比例控制先導閥，根據輸入電流成比例地調節壓力。使用時需搭配適合的功率放大器一同使用。

型號說明 ORDER CODES

EDG -	G01 -	H2 -	D1 -	R
型號 Model Name	閥門口徑 Thread Connection	壓力調整範圍 Pressure Adjusting Range	線圈電阻 Coil Resistance	安全閥有無 Safety Valve
EDG	G01 : 1/4"	H1 : 10～143 kgf/cm^2 (1.0～14 MPa) H2 : 15.3～214 kgf/cm^2 (1.5～21 MPa) H3 : 15.3～286 kgf/cm^2 (1.5～28 MPa) H4 : 20～357 kgf/cm^2 (2.0～35 MPa)	D1 : 10Ω D2 : 20Ω	R : 帶安全閥 無記號 : 不帶安全閥 R : with safety valve none : without safety valve

注意事項 HANDLING

1. 排出空氣 : 為了有良好的壓力控制， 啟動時請先鬆開壓力口進行排氣，並將電磁閥先注滿液壓油。排氣端口根據M4固定螺絲的鬆緊、外殼的轉動情況，其位置可以改變。
2. 安裝方法 : 若安裝在垂直面上則最低壓力均提高2kgf/cm^2 (0.2MPa)。
3. 手動調整螺栓 : 首次調整或因電器故障等閥中無輸入電流時，可以將手動調整螺栓向右轉動以增加流量。平時，必須把螺栓全部旋回左邊，並請鎖緊螺母。
4. 回油管儘量減少壓力，單獨使用一條管路直接插入油箱油面以下。
5. 最小溢流流量 : 流量過小時，設定壓力可能不夠穩定，所以應將流量控制在0.3 l/min以上。
6. 負荷容量 : 通過主閥直接控制迴路壓力時，請將負荷容量 (閥P口測的容量) 設在40 cm^{3}以上。
7. 操作油選擇 :
   油溫: -20 to 70°C　黏度: 12 to 400mm^2/s
   推薦黏度範圍: 15 to 60mm^2/s

1. Air Bleeding : To enable proper pressure control, loosen the air vent when starting up the pump in order to drain any air from the pump, and fill the inside of the solenoid with hydraulic operational fluid. The position of the air vent can change by loosening the M4 screw and rotating the cover.
2. Mounting Method : Mounting on a vertical surface causes minimum pressure to increase by 2 kgf/cm^2 (0.2 MPa).
3. Manual Pressure Adjusting Screw : For the initial adjustment or when there is no input current to the valve due to an electrical problem or some other reason, valve pressure can be increased by rotating the manual adjustment screw clockwise (rightward). Normally, the manual adjusting screw should be rotated back fully to the left (counterclockwise) and secured with the lock nut.
4. Please minimize the oil pressure in the return line, and make sure that the output of independent tube must be under the oil surface in the tank.
5. Minimum Relief Flow Rate : A small flow rate can cause setting pressure to become unstable. Use a flow rate of at least 0.3 l/min.
6. Load Capacity : When using this valve to control direct circuit pressure, make sure the load volume (P port side volume) is at least 40 cm^3.
7. Use an operating fluid that conforms to the both of the following.
   Oil temperature: -20 to 70°C.　Viscosity: 12 to 400mm^2/s.
   The recommended viscosity range is 15 to 60mm^2/s.

規格 SPECIFICATION

型號 Model	EDG-G01
最大流量 Max. Flows	1.2 l/min
壓力調整範圍 Pressure Adjusting Range	H1 : 10～143 kgf/cm^2 (1.0～14MPa) H2 : 15.3～214 kgf/cm^2 (1.5～21MPa) H3 : 15.3～286 kgf/cm^2 (1.5～28MPa) H4 : 20～357 kgf/cm^2 (2.0～35MPa)
定額電流 Rated Current	800 mA
線圈阻抗 Coil Resistance	10Ω or 20Ω (20°C)
磁滯 Magnetic Hysteresis	＜3%
再現性 Repeatability	＜1%
放大器型號 Amplifier No.	TW2085
重量 Weight	1.6 kg

* 備註: 該數據為使用本公司專用功率放大器時的數值 (TW2085 附顫震功能)。
* **Note:** Value when a WILSON amplifier TW2085 is used (with dithering).

性能曲線 PERFORMANCE CURVES

輸入電流-壓力 曲線
Input Current - Pressure Characteristics

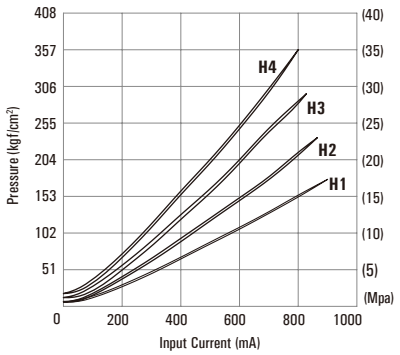

* 操作油黏度 32mm²/s
Hydraulic Operating Fluid Viscosity 32mm²/s

附件 BUNDLED ACCESSORIES

型號 Model	安裝螺絲 Mounting Bolts	數量 Q'ty
EDG-G01	M5 x L45	4

尺寸圖 DIMENSION (UNIT:MM)

EDG-G01

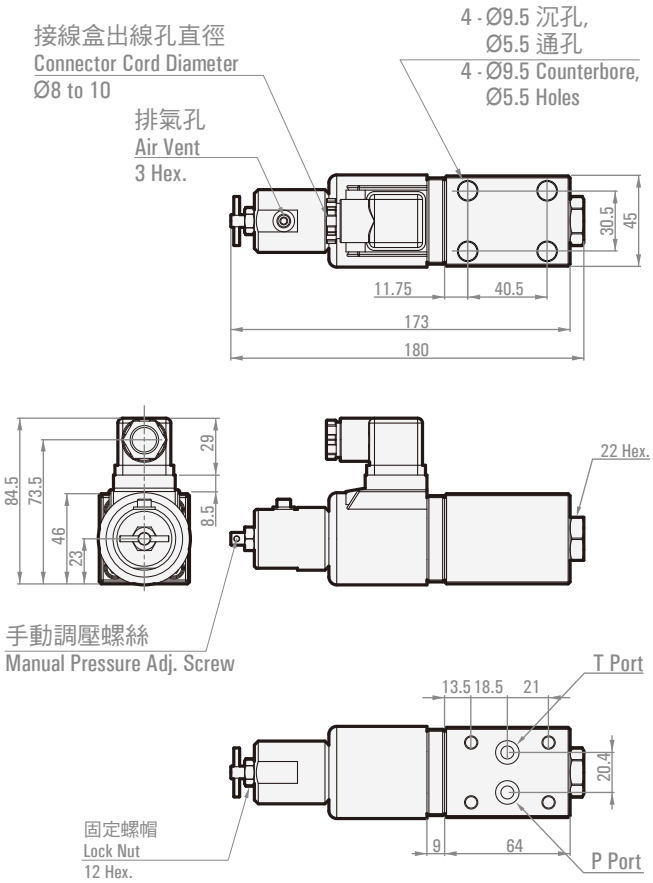

EDG-G01-R

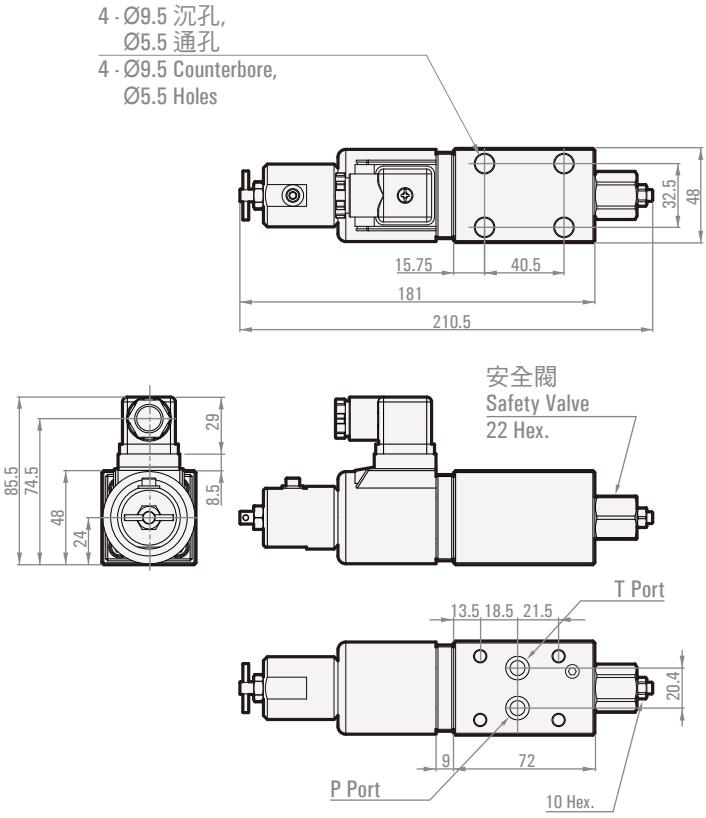

電液比例先導溢流閥

Electro-Hydraulic Proportional Pilot Relief Valve

EBG-G03, G06

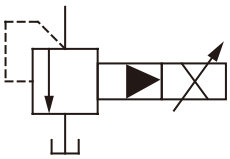

EBG系列由電液比例先導溢流閥和低噪音研製的主閥體組成。由於採用特殊緩衝機構，能使壓力的控制更加精密與穩定。

型號說明 ORDER CODES

EBG -	G03 -	H2 -	D2
型號 Model Name	閥門口徑 Thread Connection	壓力調整範圍 Pressure Adjusting Range	線圈電阻 Coil Resistance
EBG	G03 : 3/8" G06 : 3/4"	H1 : 10～143 kgf/cm^2 (1.0～14 MPa) H2 : 15.3～214 kgf/cm^2 (1.5～21 MPa) H3 : 15.3～286 kgf/cm^2 (1.5～28 MPa) H4 : 20～357 kgf/cm^2 (2.0～35 MPa)	D1 : 10Ω D2 : 20Ω

注意事項 HANDLING

1. 排出空氣：要進行良好的壓力控制，一開始運行前要扭鬆排氣口，充分抽出空氣，電磁閥內需注滿液壓油。
2. 手動調整螺栓：首次調整或因電器故障等閥中無輸入電流時，可以透過手動調整螺栓向右轉動以增加流量。平時，必須把螺栓全部旋回左邊，並請鎖緊螺母。
3. 回油管儘量減少壓力，單獨使用一條管路直接插入油箱油面以下。
4. 安全閥的設定壓力：安全閥的設定是在最高調整壓力上加上15.3～20.4kgf/cm^2 (1.5～2.0MPa)的壓力。實際使用時，請按照實際使用壓力進行調整。
5. 操作油選擇：
   油溫: -20 to 70°C　黏度: 12 to 400mm^2/s
   推薦黏度範圍: 15 to 60mm^2/s

1. Air Bleeding : To enable proper pressure control, loosen the air vent when starting up the pump in order to bleed any air from the pump, and fill the inside of the solenoid with hydraulic operational fluid.
2. Manual Pressure Adjusting Screw : For the initial adjustment or when there is no input current to the valve due to an electrical problem or some other reason, valve pressure can be increased by rotating the manual adjustment screw clockwise (rightward). Normally, the manual adjusting screw should be rotated back fully to the left (counterclockwise) and secured with the lock nut.
3. Please minimize the oil pressure in the return line, and make sure that the output of independent tube must be under the oil surface in the tank.
4. Safety Valve Setting Pressure : The safety valve is set to maximum adjustment pressure plus 15.3 to 20.4 kgf/cm^2 (1.5 to 2.0 MPa). When actually using the valve, adjust in accordance with actual pressure.
5. Use an operating fluid that conforms to the both of the following.
   Oil temperature: -20 to 70°C.　Viscosity: 12 to 400mm^2/s.
   The recommended viscosity range is 15 to 60mm^2/s.

規格 SPECIFICATION

型號 Model	EBG-G03	EBG-G06
最大流量 Max. Flows	100 l/min (26.4 gpm)	200 l/min (52.8 gpm)
壓力控制範圍 Pressure Adjusting Range	H1 : 10～143 kgf/cm^2 (1.0～14MPa) H2 : 15.3～214 kgf/cm^2 (1.5～21MPa) H3 : 15.3～286 kgf/cm^2 (1.5～28MPa) H4 : 20～357 kgf/cm^2 (2.0～35MPa)	
定額電流 Rated Current	800 mA	
線圈阻抗 Coil Resistance	20Ω (20°C)	
磁滯 Magnetic Hysteresis	＜3%	
再現性 Repeatability	＜1%	
放大器型號 Amplifier No.	TW2085	
重量 Weight	6.6 kg	7.8 kg

* **備註:** 該數據為使用本公司專用功率放大器時的數值 (TW2085 附顫震功能)。

* **Note:** Value when a WILSON amplifier TW2085 is used (with dithering).

性能曲線 PERFORMANCE CURVES

輸入電流-壓力 性能曲線

Input Current - Pressure Characteristics

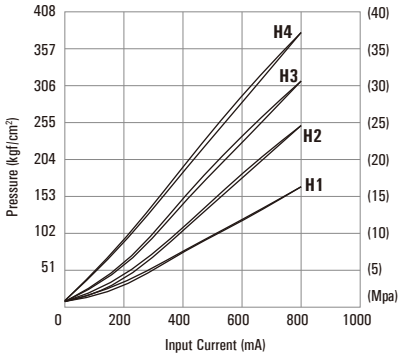

* 操作油黏度 32mm^2/s

Hydraulic Operating Fluid Viscosity 32mm^2/s

流量-壓力 性能曲線

Flow Rate - Pressure Characteristics

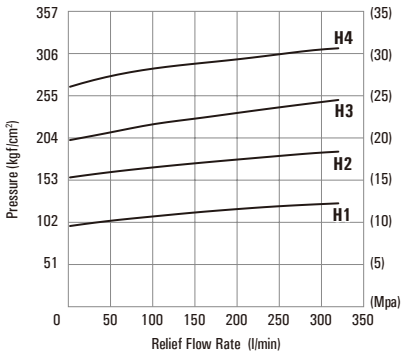

附件 BUNDLED ACCESSORIES

型號 Model	安裝螺絲 Mounting Bolts	數量 Q'ty
EBG-G03	M12 x L35	4

型號 Model	安裝螺絲 Mounting Bolts	數量 Q'ty
EBG-G06	M16 x L45	4

尺寸圖 DIMENSION (UNIT:MM)

EBG-G03

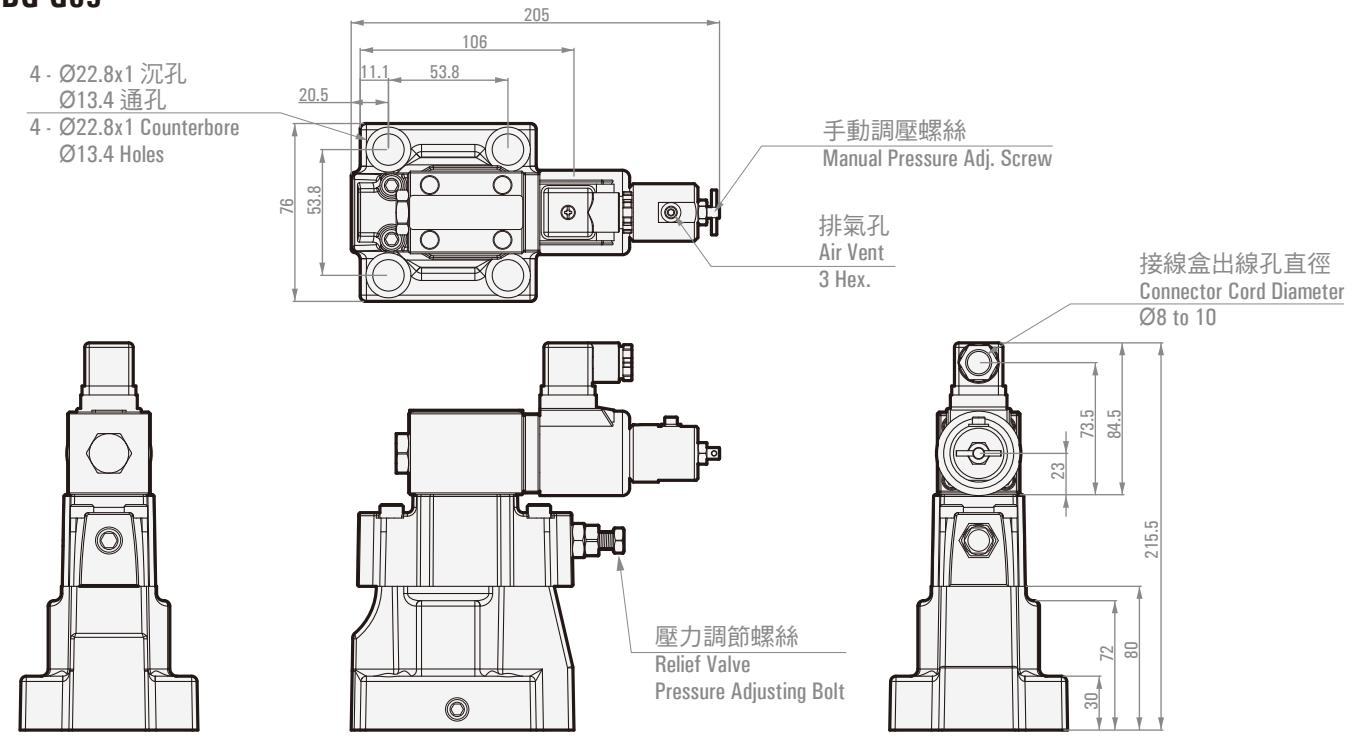

EBG-G06

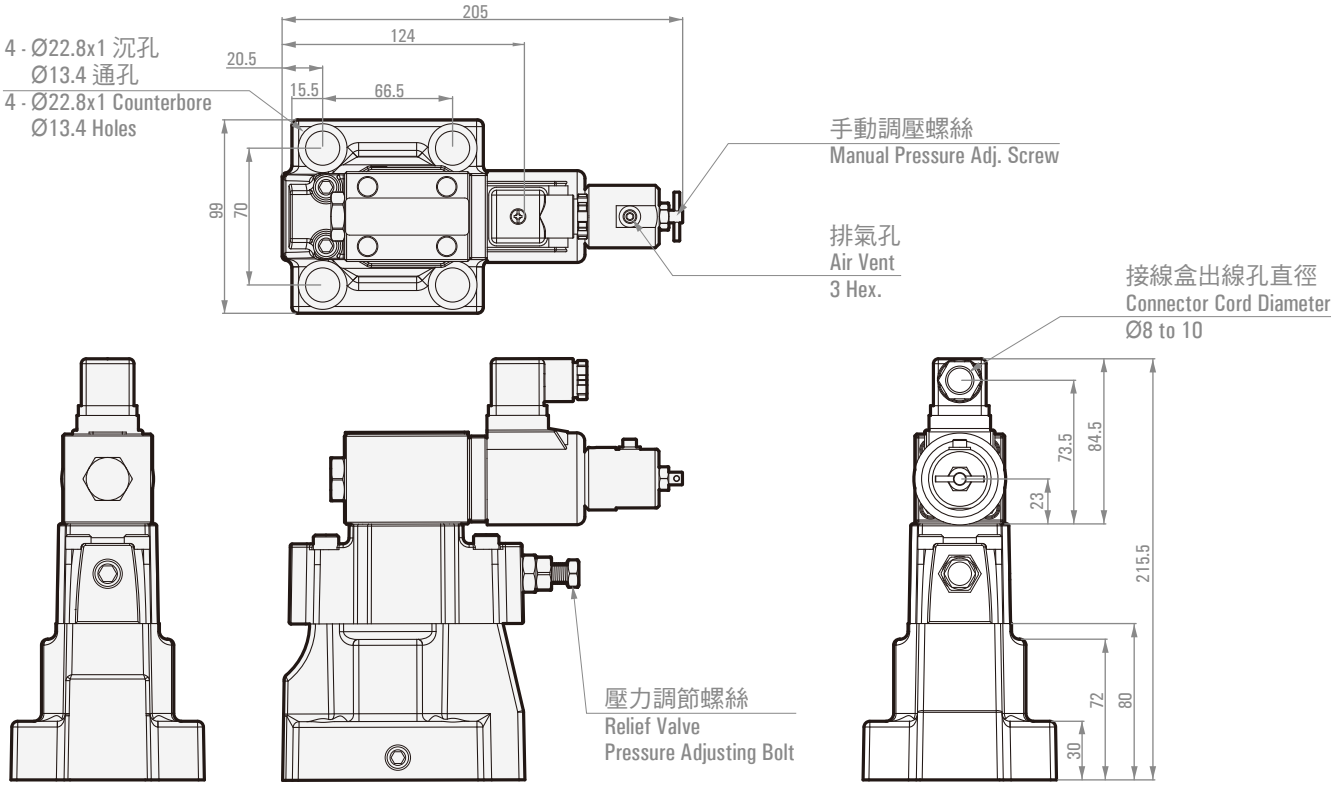

功率放大器
Electronic Amplifier P-C Board

TW9820, TW2085, TW9820-2

TW9820
(without dithering)

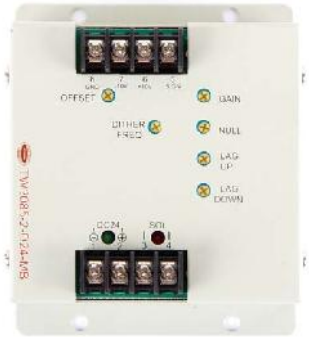

TW2085
(with dithering)

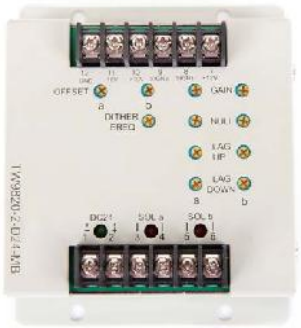

TW9820-2
(with dithering)

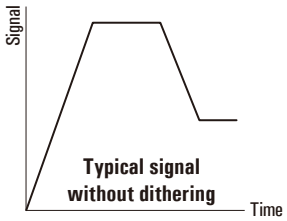

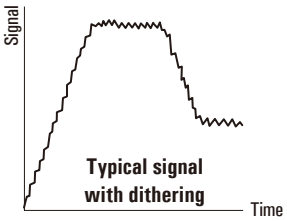

調整顫震頻率主要是可以有效的抵銷遲滯，使閥的反應死區縮短。
The effect used to vibrate a proportional valve spool is called dither. Dithering can offset the hysteresis. The dither frequency is specific to each valve and application,and the valve amplifier, or controller, will have an adjustable dither frequency. Hence, please purchase our amplifier togehter with the proportional valves.

規格 SPECIFICATION

型號 Model	TW9820	TW2085	TW9820-2
電源供應 Supply Voltage	AC28V ±20% DC24V	DC24V	DC24V
保險絲 Fuse	2A	2A	2A
負載阻抗 Load Coil Resistance	20Ω (20°C)	10Ω / 20Ω (20°C)	20Ω (20°C)
輸入控制電壓 Input Control Voltage	0V ~ +10V	0V ~ +10V	0V ~ +10V
最大電流輸出範圍 Max. Current Output Range	0 ~ 900 mA	0 ~ 900 mA	0 ~ 900 mA
零點調整 (Null) Adjust the Null Value	0 ~ 900 mA	0 ~ 900 mA	0 ~ 900 mA
增益調整 (Gain) Adjust the Gain Value	0 ~ 900mA/2.5V	0 ~ 900mA/2.5V	0 ~ 900mA/2.5V
上升延時 / 下降延時 Up Ramp Period / Down Ramp Period	0.1 ~ 2.5 sec.	0.1 ~ 2.5 sec.	0.1 ~ 2.5 sec.
溫度誤差 Temperature Drift	0.2mA / 1° C	0.1mA / 1°C	0.2mA / 1°C
工作溫度 Work Temperature	0 ~ 50° C	0 ~ 50°C	0 ~ 50°C
最大消耗電力 Max. Power Requirement	30VA	15VA	30VA
重量 Weight	0.21 kg	0.21 kg	0.21 kg

配電說明 & 尺寸圖 ELECTRIC DISTRIBUTION & DIMENSION (UNIT:MM)

TW9820

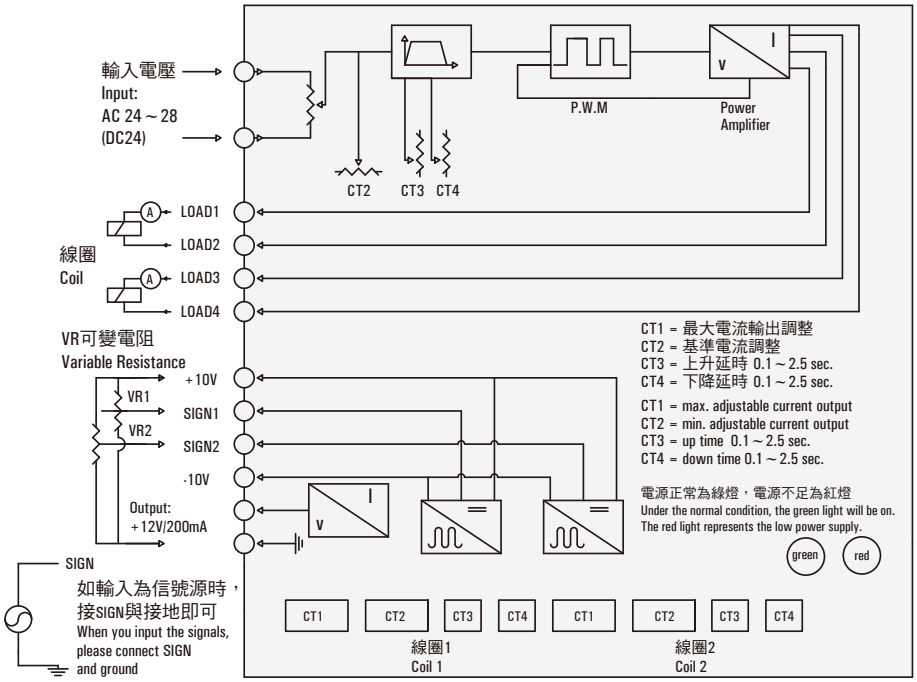

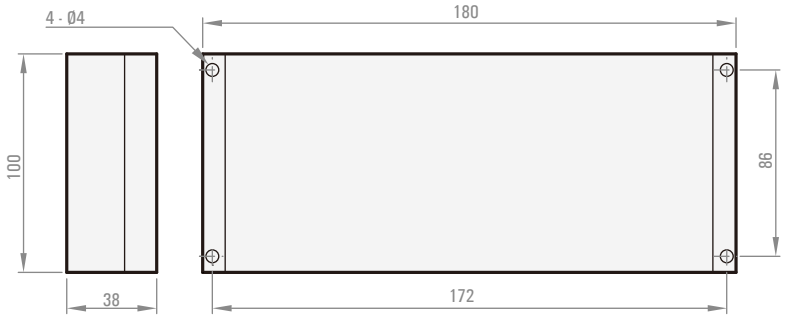

配電說明 INSTRUCTION

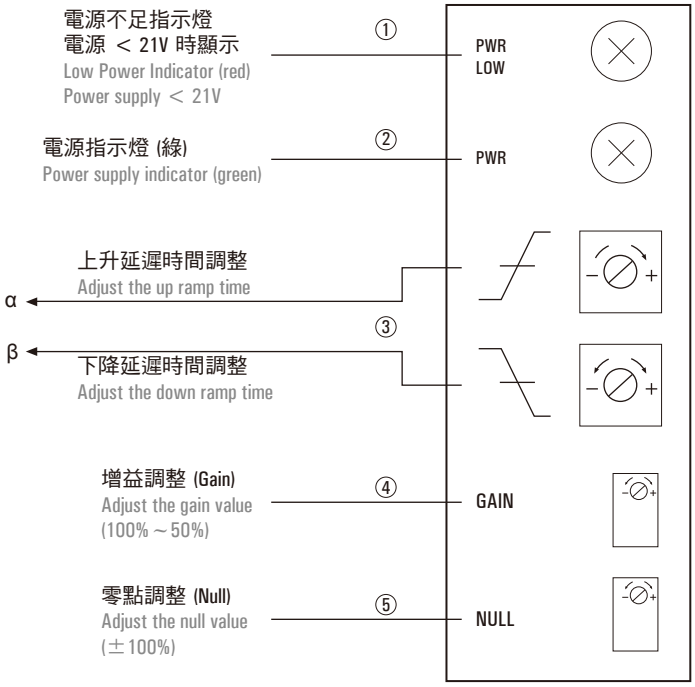

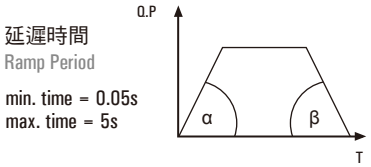

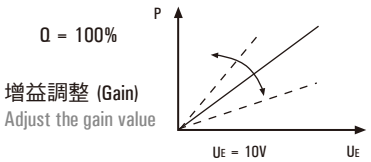

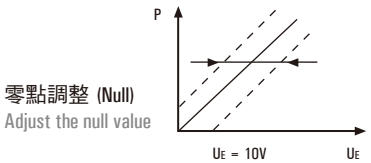

配電說明 & 尺寸圖 ELECTRIC DISTRIBUTION & DIMENSION (UNIT:MM)

TW2085

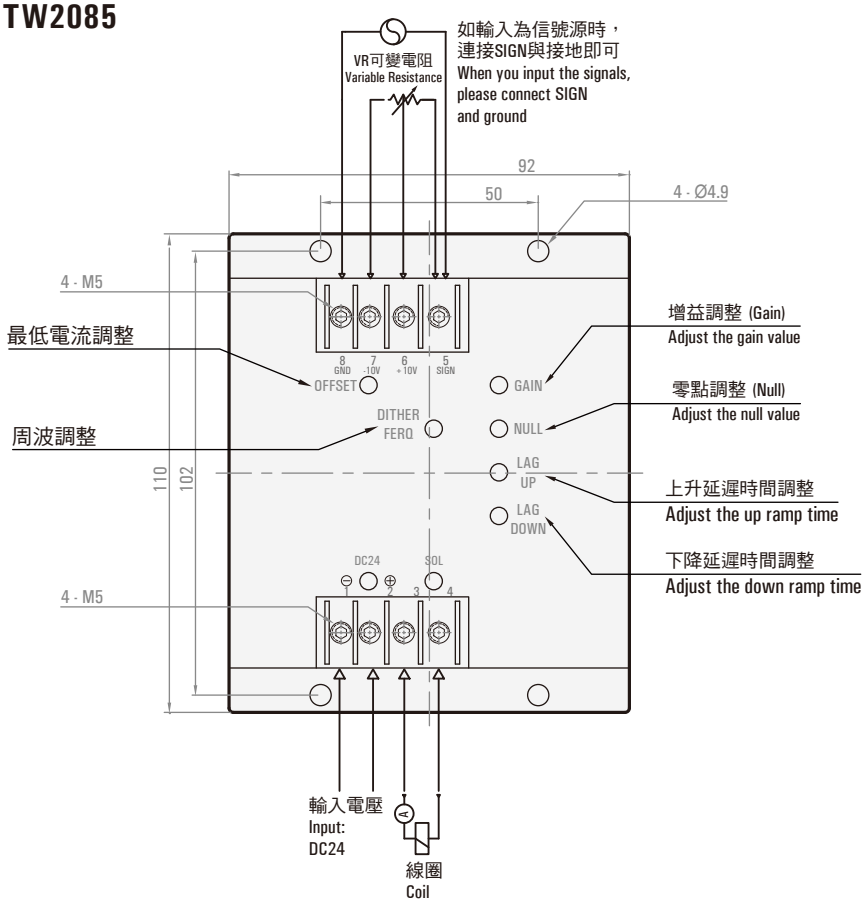

接線圖 Wiring instruction		
1	電源電壓 – Power supply voltage –	DC 24V
2	電源電壓 + Power supply voltage +	
3	閥線圈 SOL Solenoid coil SOL	
4	閥線圈 SOL Solenoid coil SOL	
5	訊號輸入點 Input signal terminal	5 6 7 10kΩ
6	+10V	
7	-10V	
8	接地 – Ground	

* 5, 8 : 數位訊號輸入接腳 (0～10V)
5, 6, 7 : 可變電阻輸入接腳

* Terminal 5, 8 : Input signal terminals (0～10V)
Terminal 5, 6, 7 : Adjustable resistor terminals.

TW9820-2

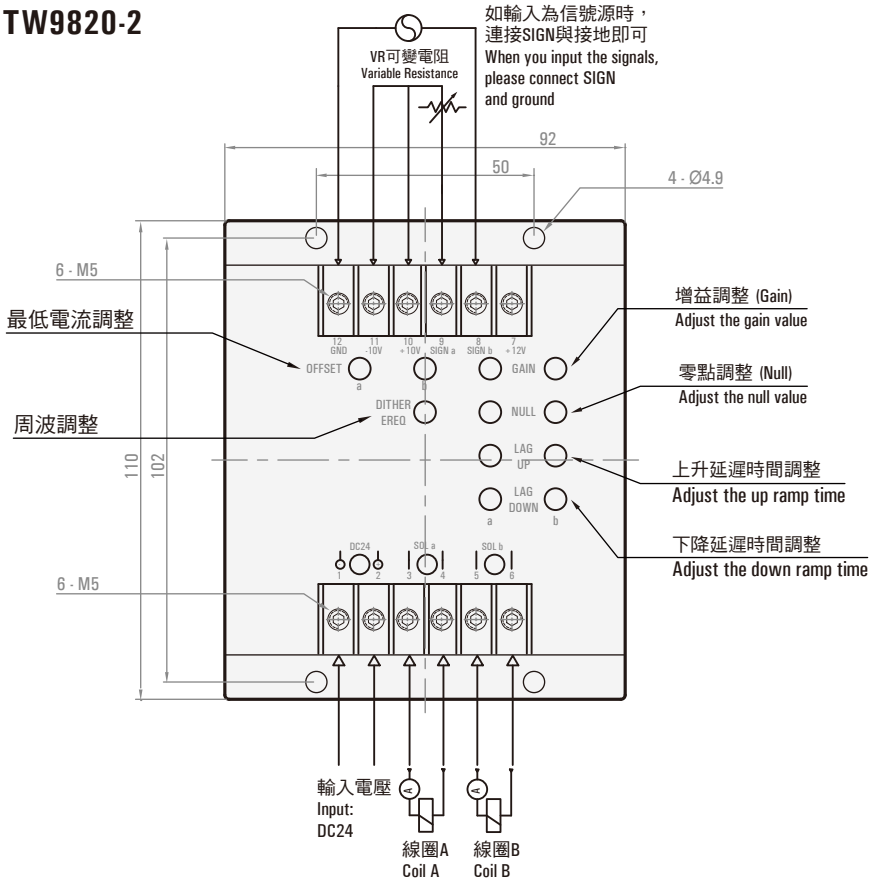

接線圖 Wiring instruction		
1	電源電壓 – Power supply voltage –	DC 24V
2	電源電壓 + Power supply voltage +	
3	閥線圈 SOL a Solenoid coil SOL a	
4	閥線圈 SOL a Solenoid coil SOL a	
5	閥線圈 SOL b Solenoid coil SOL b	
6	閥線圈 SOL b Solenoid coil SOL b	
7	+12V	
8	訊號輸入點 b Input signal terminal b	8(9) 10 11 10kΩ
9	訊號輸入點 a Input signal terminal a	
10	+10V	
11	-10V	
12	接地 – Ground	

* 8/9, 12 : 數位訊號輸入接腳 (0～10V)
8/9, 10, 11 : 可變電阻輸入接腳

* Terminal 8/9, 12 : Input signal terminals (0～10V)
Terminal 8/9, 10, 11 : Adjustable resistor terminals.

電磁換向閥
Solenoid Operated Directional Valve

DSG-02, DSG-03

DSG - ※※ - ※※※ - ※※N

DSG - ※※ - ※※※ - ※※

DSG - ※※ - ※※※ - ※※C

型號說明 ORDER CODES

DSG -	02 -	3C2 -	A2	N
型號 Model Name	閥門口徑 Thread Connection	心軸形式 Spool Type	線圈電壓 Power Source	接線方式 Solenoid Appearance
DSG	02 : 1/4" (NG6) 03 : 3/8" (NG10)	請參照閥軸型號 Please refer to the symbol list	A1 : AC110V A2 : AC220V A3 : AC380V AC24 : AC24V D1 : DC12V D2 : DC24V R1 : RF110V R2 : RF220V	N : 插頭型 無: 接線盒型 C: 出線式 N : DIN connector none : Terminal box type C: Wiring type

規格 SPECIFICATION

型號 Model		DSG-02	DSG-03
最大使用壓力 (P, A, B孔) Max. Pressure (P, A, B Port)	一般形式 normal type	31.5 MPa	
	心軸形式: 3C5, 3C60 spool type: 3C5, 3C60	25 MPa	
最大背壓 (T孔) Permissible Back Pressure (T Port)		16 MPa	
最高換向頻率 Max. Switch Frequency		AC, DC : 240 cycle/min RF : 120 cycle/min	
最大流量 Max. Flow		60 l/min	80 l/min
溫度範圍 Operating Fluid Temp. Range		5 ~ 60 °C (40 ~ 140 °F)	
油黏度 Viscosity Range		20 ~ 300 cSt	
過濾精度 Filtration Required		25μm	
重量 (kgs) Weight	單頭 1 Solenoid	AC : 1.6 DC, RF : 1.9	AC : 3.6 DC, RF : 4.3
	雙頭 2 Solenoids	AC : 2.0 DC, RF : 2.2	AC : 4.6 DC, RF : 5.6
附件螺栓 Screw Bolt		M5x45 x4pcs or 3/16"x1-3/4" x4pcs	M6x35 x4pcs or 1/4"x1-1/2" x4pcs

閥軸型號 SYMBOLS

單頭二位 彈簧復位 Single Coil, Two Positions with Spring Return (standard)		單頭二位 彈簧復位 Single Coil, Two Positions with Spring Return (reverse)		單頭二位 彈簧復位 Single Coil, Two Positions with Spring Return (standard)		單頭二位 彈簧復位 Single Coil, Two Positions with Spring Return (reverse)	
2B2A	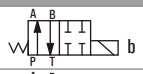	2B2AL	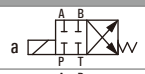	2B2B	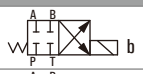	2B2BL	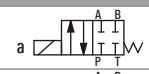
2B3A	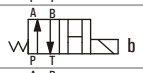	2B3AL	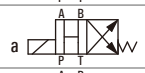	2B3B	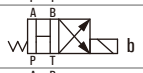	2B3BL	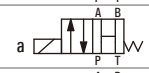
2B4A	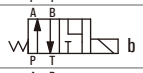	2B4AL	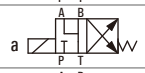	2B4B	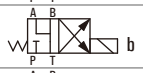	2B4BL	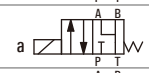
2B40A	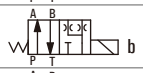	2B40AL	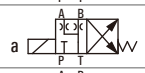	2B40B	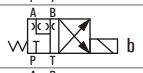	2B40BL	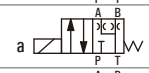
2B5A	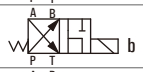	2B5AL	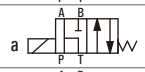	2B5B	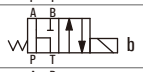	2B5BL	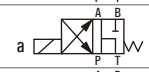
2B60A	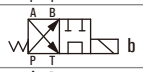	2B60AL	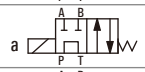	2B60B	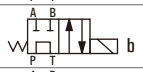	2B60BL	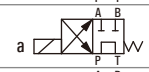
2B7A	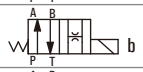	2B7AL	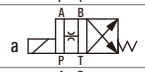	2B7B	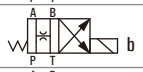	2B7BL	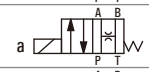
2B8A	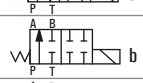	2B8AL	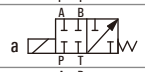	2B8B	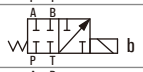	2B8BL	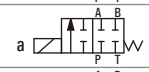
2B9A	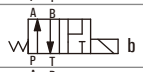	2B9AL	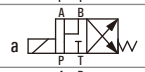	2B9B	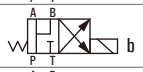	2B9BL	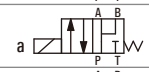
2B10A	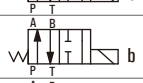	2B10AL	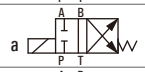	2B10B	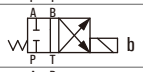	2B10BL	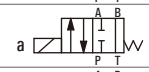
2B11A	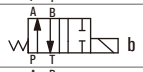	2B11AL	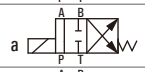	2B11B	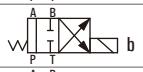	2B11BL	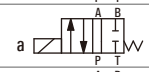
2B12A	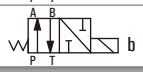	2B12AL	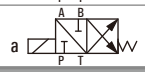	2B12B	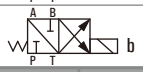	2B12BL	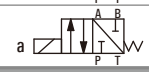

雙頭三位 彈簧復中 Double Coils, Three Positions,with Spring		雙頭三位 機械定位 Double Coils, Two Positions, without Spring		雙頭三位 機械定位 Double Coils, Two Positions,without Spring	
3C2	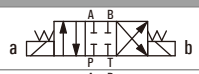	2D2	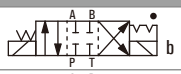	2D2A	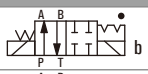
3C3	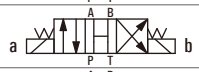	2D3	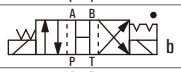	2D3A	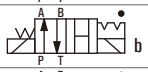
3C4	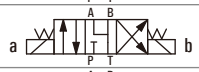	2D7	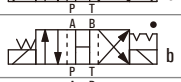	2D4A	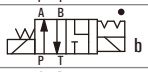
3C40	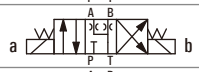	2D8		2D40A	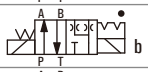
3C5		單頭二位 彈簧復位 Single Coil, Two Positions with Spring Return (standrd)		2D5A	
3C60	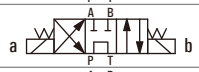			2D7A	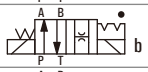
3C7	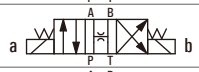	2B2	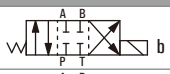	2D9A	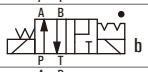
3C8	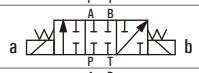	2B3	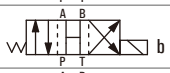	2D10A	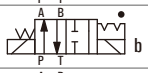
3C9	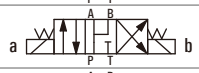	2B8	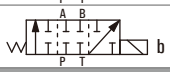	2D11A	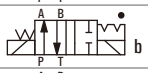
3C10	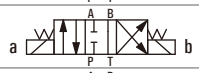	單頭二位 彈簧復位 Single Coil, Two Positions with Spring Return (reverse)		2D12A	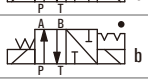
3C11	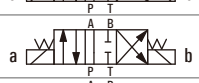				
3C12	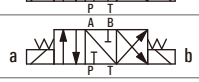	2B2L	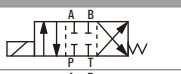		
		2B3L	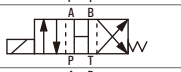		
		2B8L	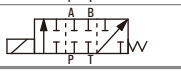		

線圈規格 SPECIFICATIONS & PROPERTIES OF SOLENOIDS

電壓 Voltage		AC					DC					
		AC110V		AC220V		AC24V	DC12V	DC24V	RF110V		RF220V	
頻率 Frequency		50Hz	60Hz	50Hz	60Hz	50Hz	-	-	50Hz	60Hz	50Hz	60Hz
DSG-02	啟動電流 In-rush Current	2.1	1.96	1.05	0.95	1.45	-	-	-	-	-	-
	保持電流 Holding Current	0.6	0.56	0.3	0.27	0.41	2.7	1.3	0.52	0.52	0.19	0.26
DSG-03	啟動電流 In-rush Current	2.8	2.66	1.4	1.33	-	-	-	-	-	-	-
	保持電流 Holding Current	0.8	0.76	0.4	0.38	-	3.8	1.5	0.68	0.68	0.32	0.34
使用電壓範圍 Voltage Tolerance		定額電壓 ±10% Sol. can used for nom. volt. with ±10% of the coil.										
絕緣電阻 Insulation Resistance		超過100MΩ (DC 500V絕緣測試) Over than 100MΩ mega-OHMS										

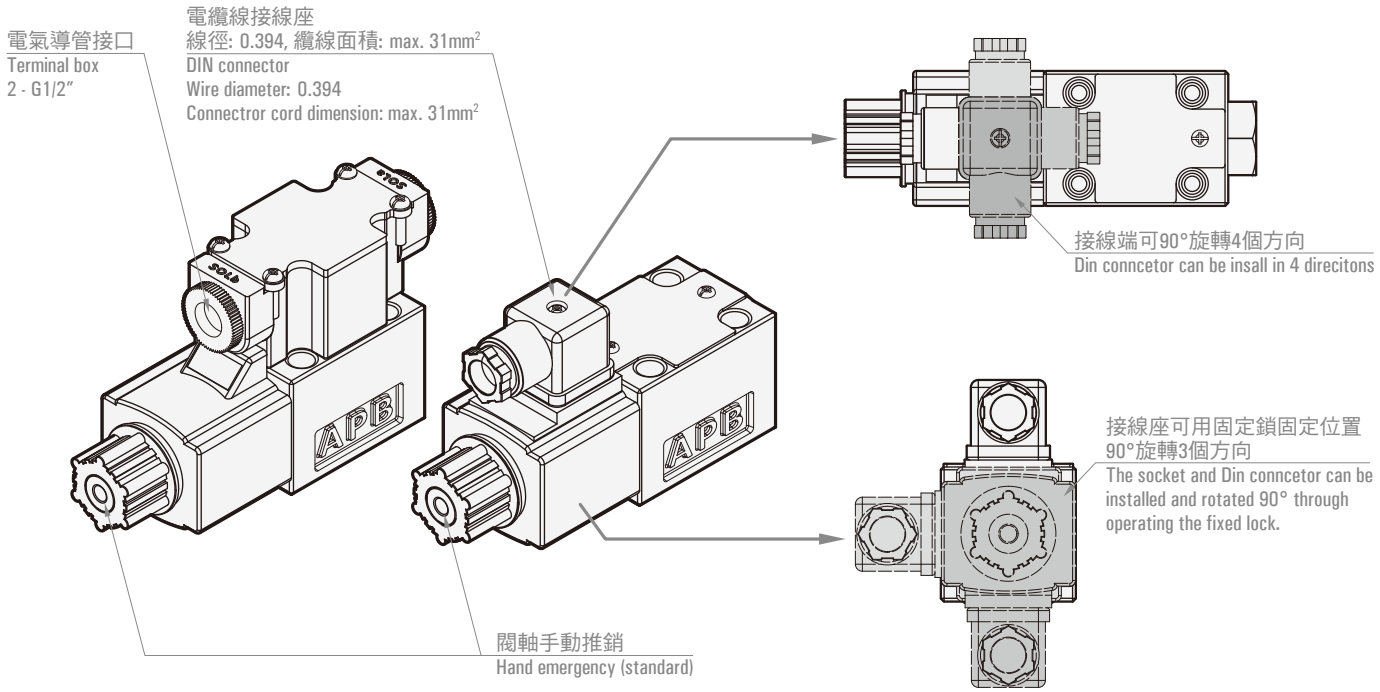

緩衝型(RF)電磁閥特點 PROPORTIES OF SOLENOID DIRECTIONAL VALVE WITH CUSHION FUNCION

1. 電磁緩衝型電磁閥磨耗少，使用壽命長。
2. 油浸式電磁鐵心切換音極小，動作震動小。
3. 高壓、大容量內部壓力損失小，徹底反應流體反力補償壓力損失，最高使用壓力300 kgf/cm²。
4. 線圈使用壽命長，替換容易，吸力強，CE認證。
5. 電磁閥附緩衝，可減少噪音震動，客製化產品如圖。

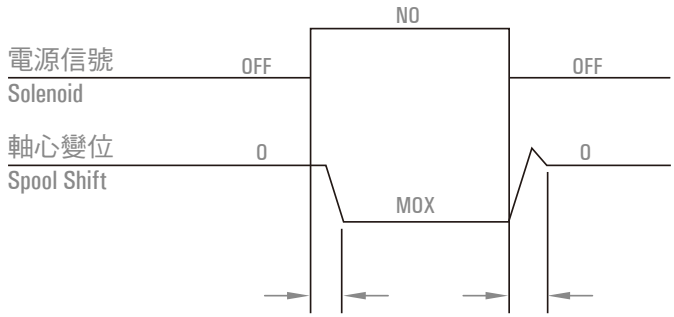

1. The moveable pins are immersed in oil it can reduce the wear of impact and ensure the longer lifespan.
2. Low switching noise, less shock.
3. High pressure, large capacity, with minimal pressure loss. Comprehensive fluid reaction force compensation and low pressure compensation construction provide large capacity and less pressure drop. The max. operation pressure is 300 kgf/cm²。
4. Our solenoid coils equip durable, easy to replace, sufficient switching power and CE certificated.
5. The solenoid directional valves with cushion function can significantly reduce noise and shock. Please see the drawing as below.

尺寸圖 DIMENSION (UNIT:MM)

DSG-02-※※※-A※N

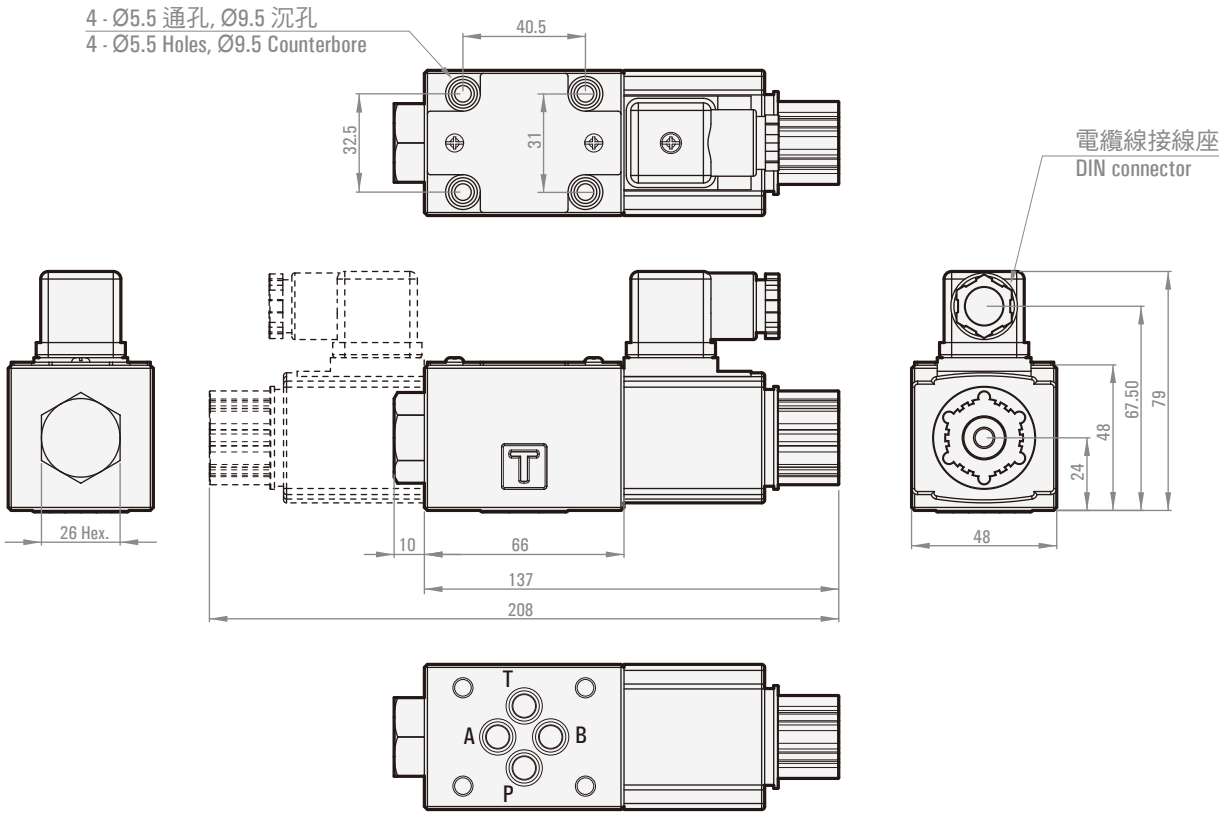

DSG-02-※※※-A※

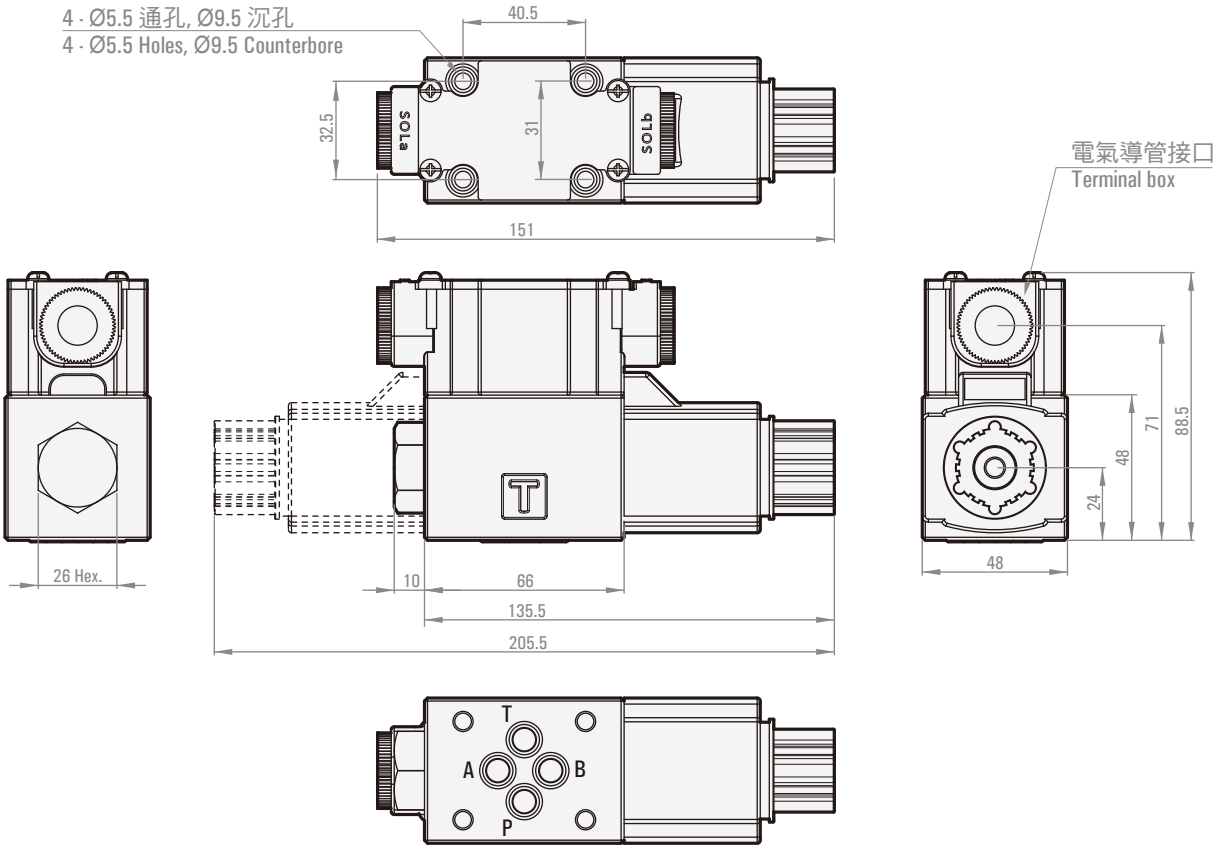

尺寸圖 DIMENSION (UNIT:MM)

DSG-02-※※※-D※N, DSG-02-※※※-R※N

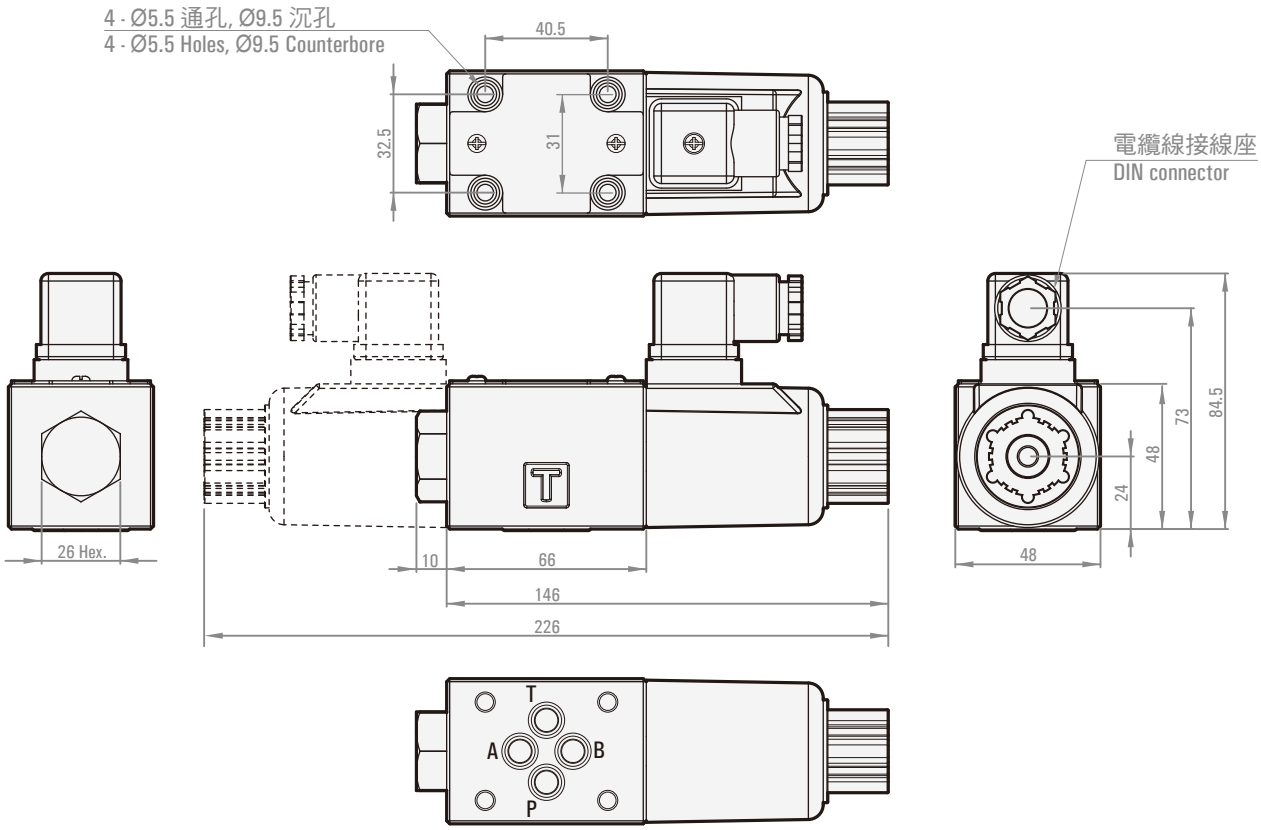

DSG-02-※※※-D※, DSG-02-※※※-R※

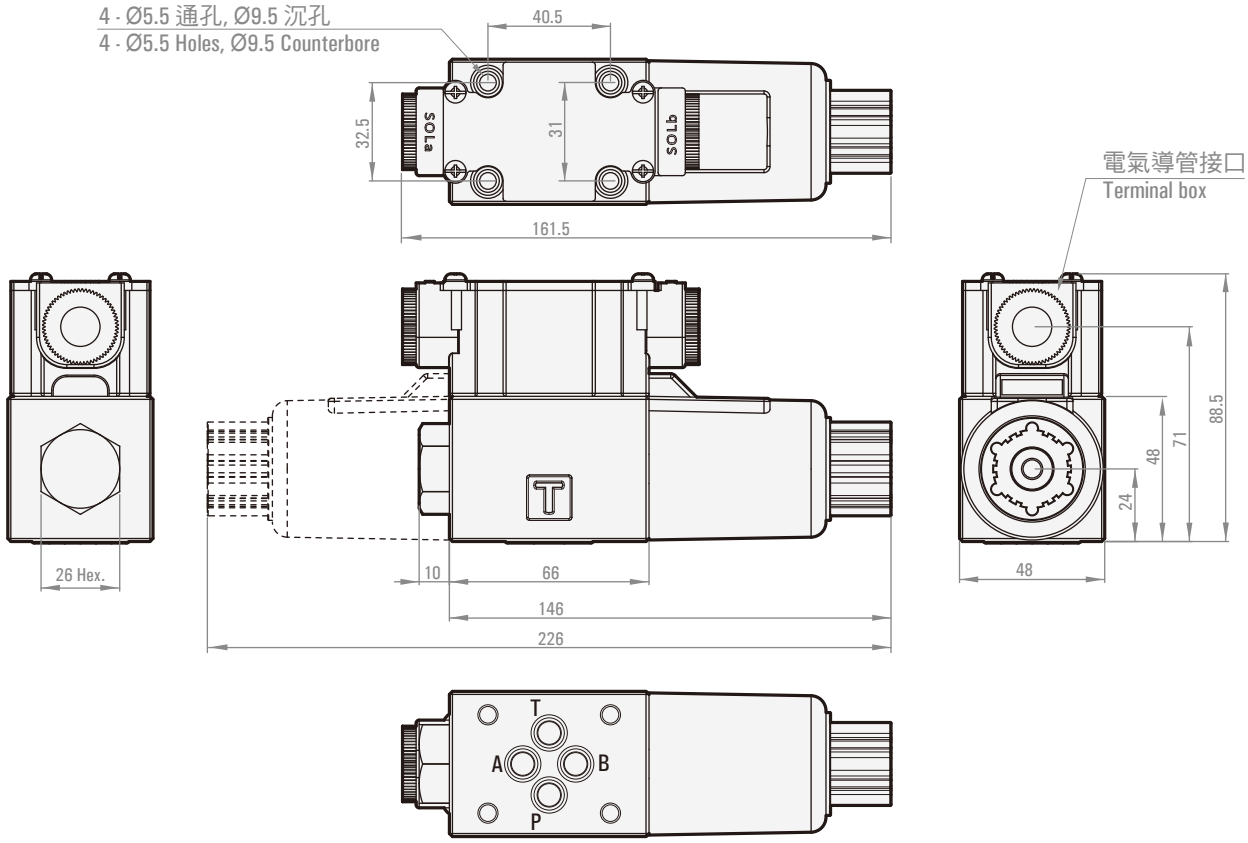

尺寸圖 DIMENSION (UNIT:MM)

DSG-03-※※※-A※N

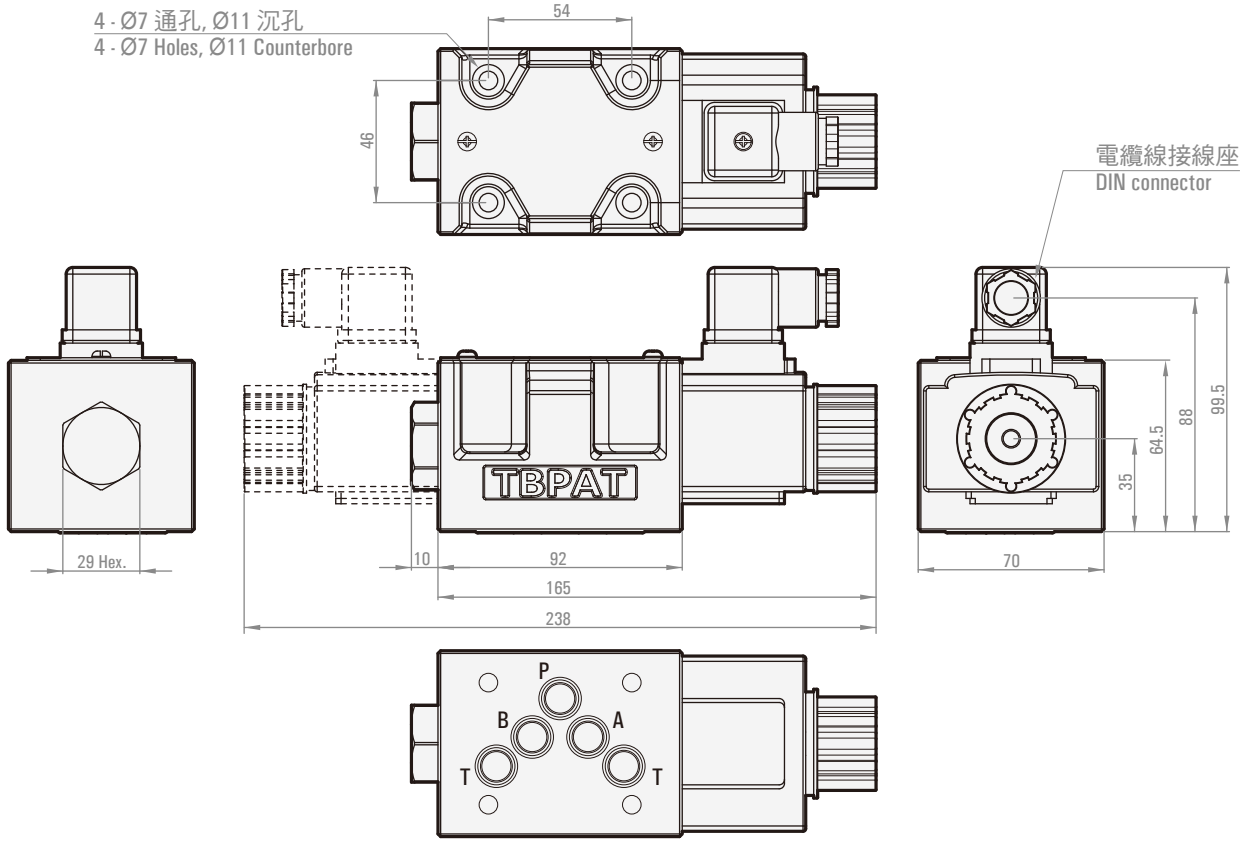

DSG-03-※※※-A※

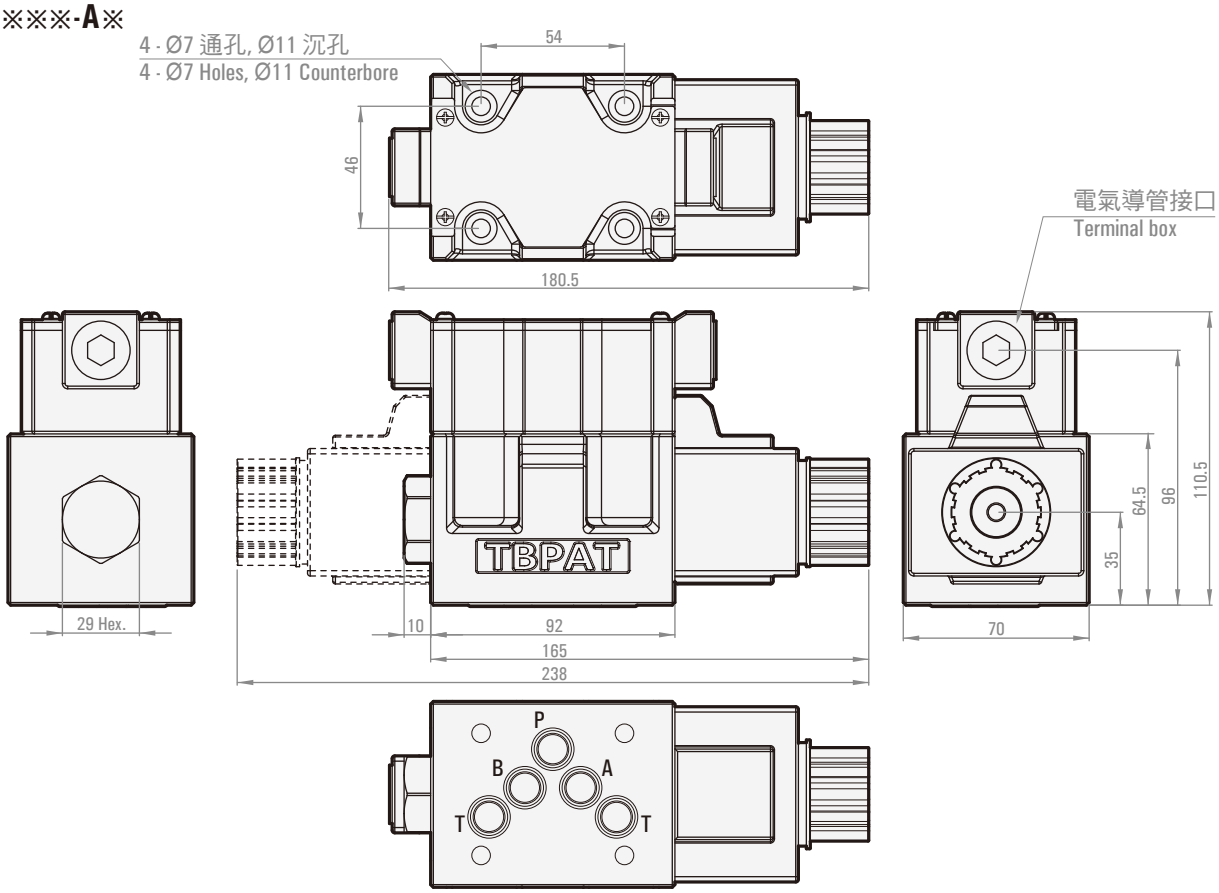

尺寸圖 DIMENSION (UNIT:MM)

DSG-03-※※※-D※N, DSG-03-※※※-R※N

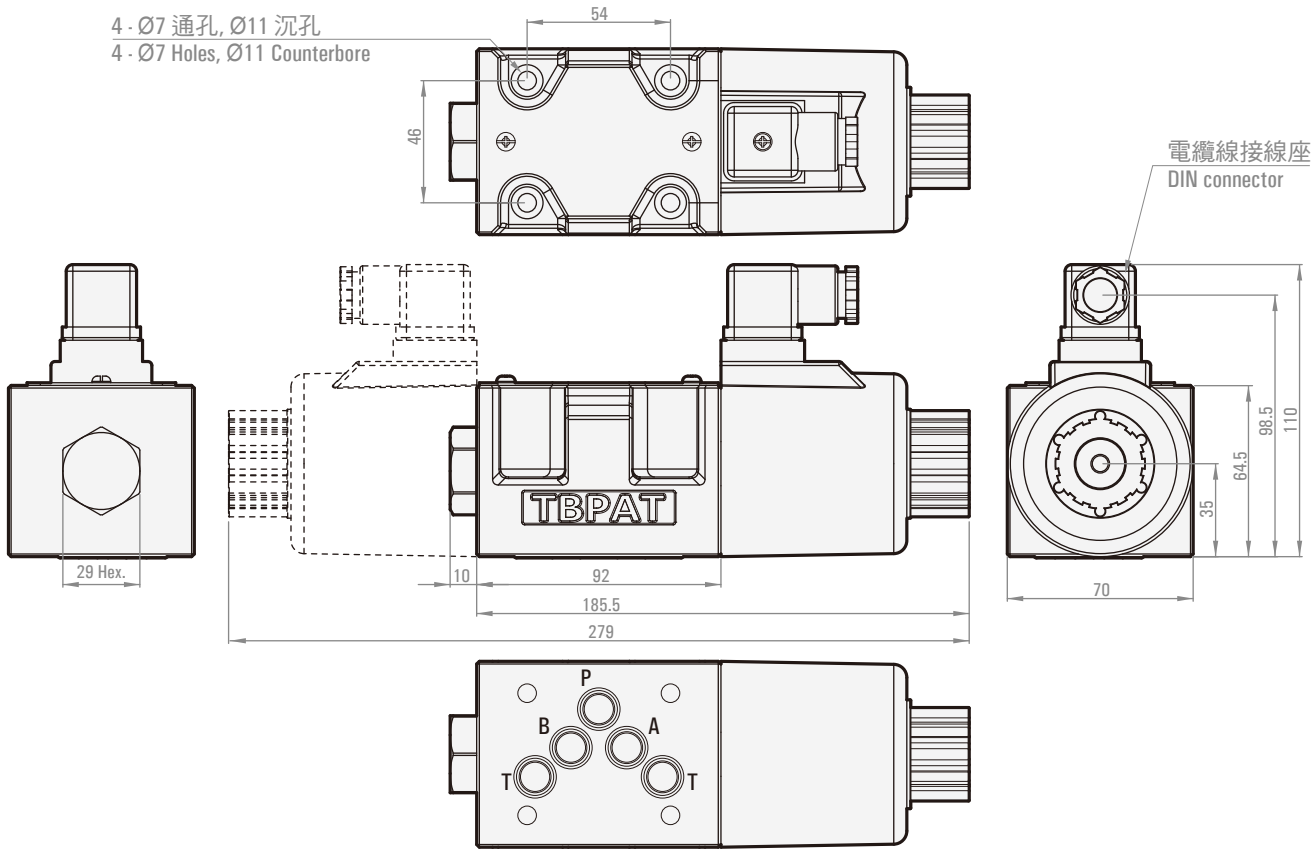

DSG-03-※※※-D※, DSG-03-※※※-R※

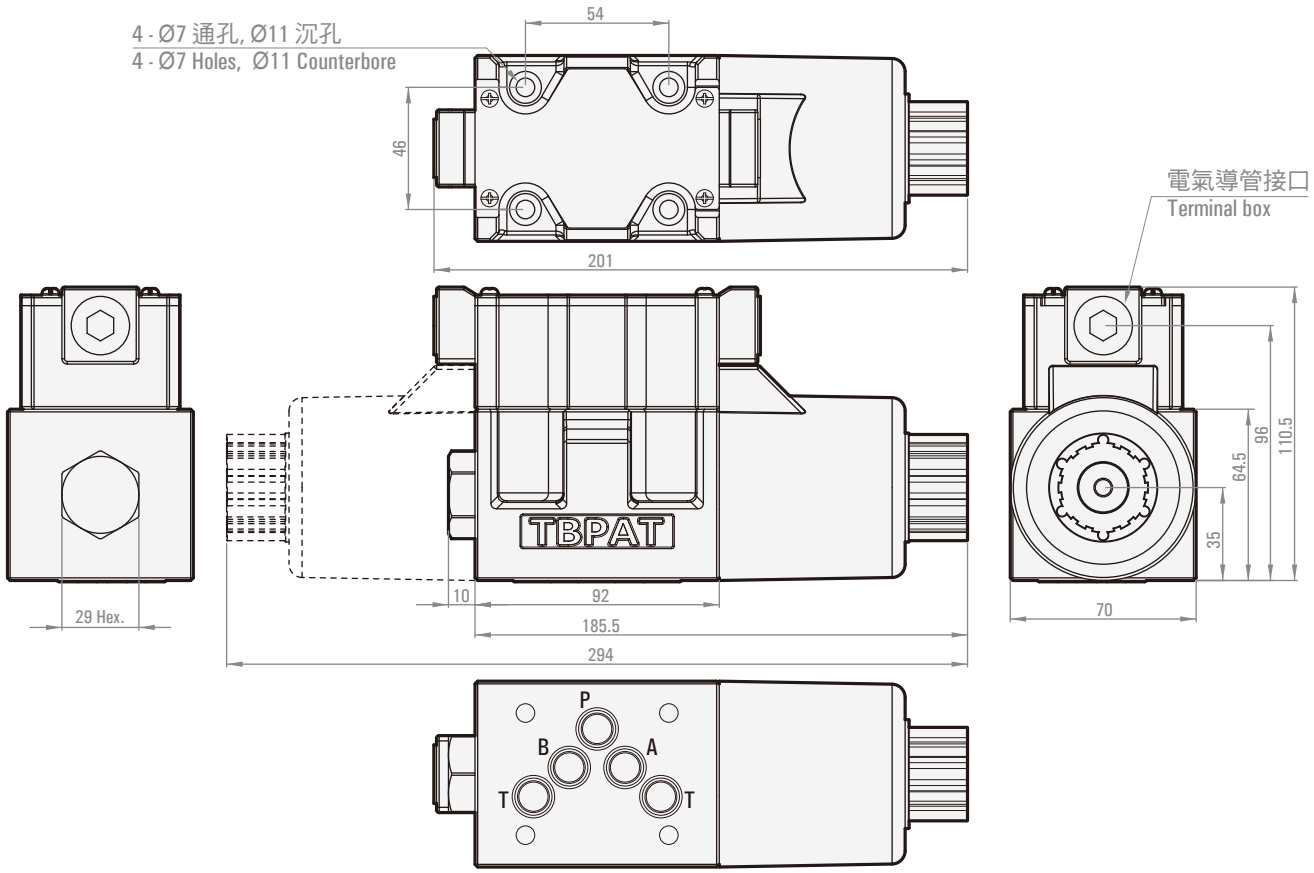

引導換向閥
Pilot Operated Directional Valve

DHG

DHG-04

DHG-06

型號說明 ORDER CODES

DHG -	06 -	3C2 -	ET -	AB
型號 Model Name	口徑 Thread Connection	心軸型式 Spool Type	洩油形式 Drain Type	調整把手 Ajustable Stroke
DHG	04 : PT 1/2" 06 : PT 3/4"	請參照符號列表 Please refer to the symbol list	無 : 內部控制油供給，內部控制油洩油 T : 內部控制油供給，外部控制油洩油 ET : 外部控制油供給，外部控制油洩油 E : 外部控制油供給，內部控制油洩油 none : pilot oil supply internal, pilot oil drain internal T : pilot oil supply internal, pilot oil drain external ET : pilot oil supply external, pilot oil drain external E : pilot oil supply external, pilot oil drain internal	無 : 標準型式 AB : AB側加可調整把手 A : A側加可調整把手 B : B側加可調整把手 none : standard type AB : both side with adjustable strokes A : port A side with adjustable strokes B : port B side with adjustable strokes

規格 SPECIFICATION

型號 Model	最大流量 Max. Flow (l/min)	最大 使用壓力 Max. Operating Pressure (kgf/cm^2)	最高 引導壓力 Max. Pilot Pressure (kgf/cm^2)	最低 引導壓力 Min. Pilot Pressure (kgf/cm^2)	T 孔最高背壓 Max. T-Line Back Pressure (kgf/cm^2)		最高換向頻率 Max. Change Over Frequency (cycles/min)		重量 Weight (kg)
					外部洩油 EXT. Drain	內部洩油 INT. Drain	AC	DC	
DHG-04	300	315	250	8	210	140	120	120	6.1
DHG-06	500	315	250	8	210	140	120	120	12.0

附件 BUNDLED ACCESSORIES

型號 Model	安裝螺絲 Mounting Bolts	數量 Q'ty
DHG-04	M6 x L40	2
	M10 x L45	4

型號 Model	安裝螺絲 Mounting Bolts	數量 Q'ty
DHG-06	M12 x L45	6

符號 SYMBOLS

三位 Three Positions		二位 Two Positions			
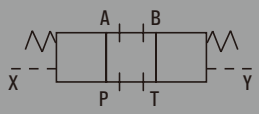		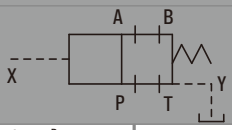			
DHG-3C2	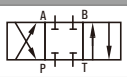	DHG-2B2A		DHG-2B2B	
DHG-3C3	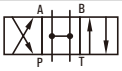	DHG-2B3A		DHG-2B3B	
DHG-3C4	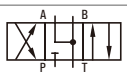	DHG-2B4A		DHG-2B4B	
DHG-3C40	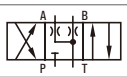	DHG-2B40A		DHG-2B40B	
DHG-3C5	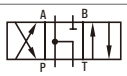	DHG-2B5A		DHG-2B5B	
DHG-3C60	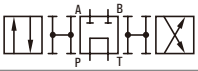	DHG-2B60A		DHG-2B60B	
DHG-3C7	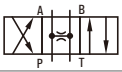	DHG-2B7A		DHG-2B7B	
DHG-3C9		DHG-2B9A		DHG-2B9B	
DHG-3C10	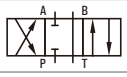	DHG-2B10A		DHG-2B10B	
DHG-3C11	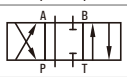	DHG-2B11A		DHG-2B11B	
DHG-3C12	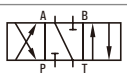	DHG-2B12A		DHG-2B12B	

PILOT(P) 與 DRAIN(D) 功能的選擇 PILOT(P) & DRAIN(D) SPECIFICATIONS

DHG-04

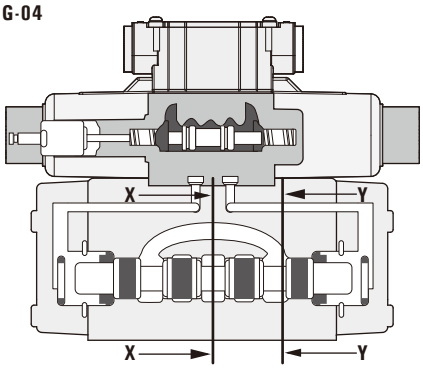

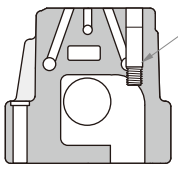

內部導引時，
需將螺塞拆除
If you need the internal pilot, please take of the plug.

X-X 截面
Cross-sectional View X-X

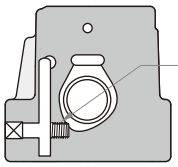

內部回油時，
需將螺塞拆除
If you need the internal drain, please take of the plug.

Y-Y 截面
Cross-sectional View Y-Y

DHG-06

外部導引時，需將1.5mm節流螺塞拆除
If you use external pilot, please unplug the oil stopper.

內部回油時，需將螺塞拆除
If you need the internal drain, please take of the plug.

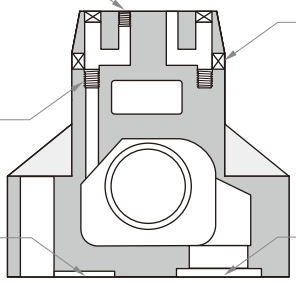

內部導引時，需將螺塞拆除
If you need the internal pilot, please take of the plug.

X孔（外部導引用）
合用內部導引時，閥座上之X孔毋需鑽孔
X port (External pilot) If you use external and internal pilot, you do not need to drig an orifice on the main stage of X port.

Y孔（外部回油）
使用內部回油時，閥座上之Y孔毋需鑽孔
Y port (External drain) If you use external and internal drain, you do not need to drig an orifice on the main stage of Y port.

尺寸圖 DIMENSION (UNIT:MM)

DHG-04

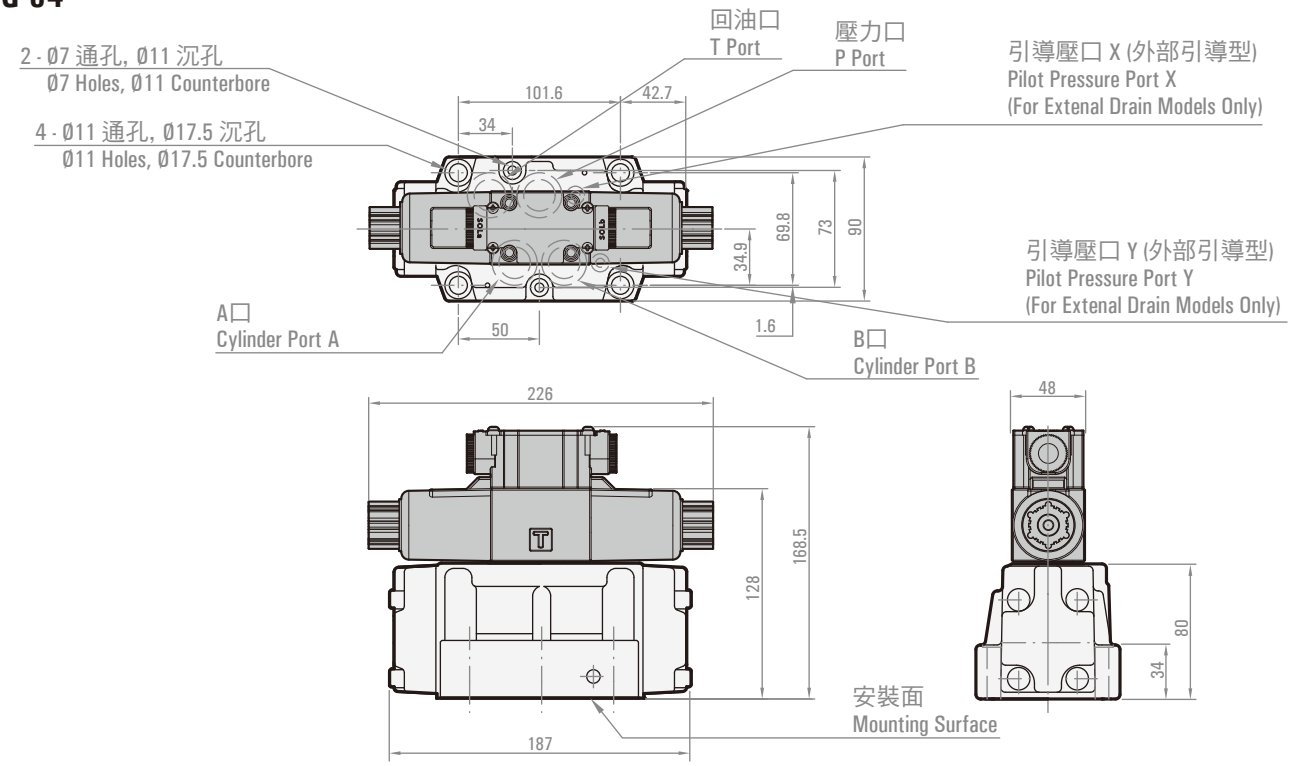

DHG-06

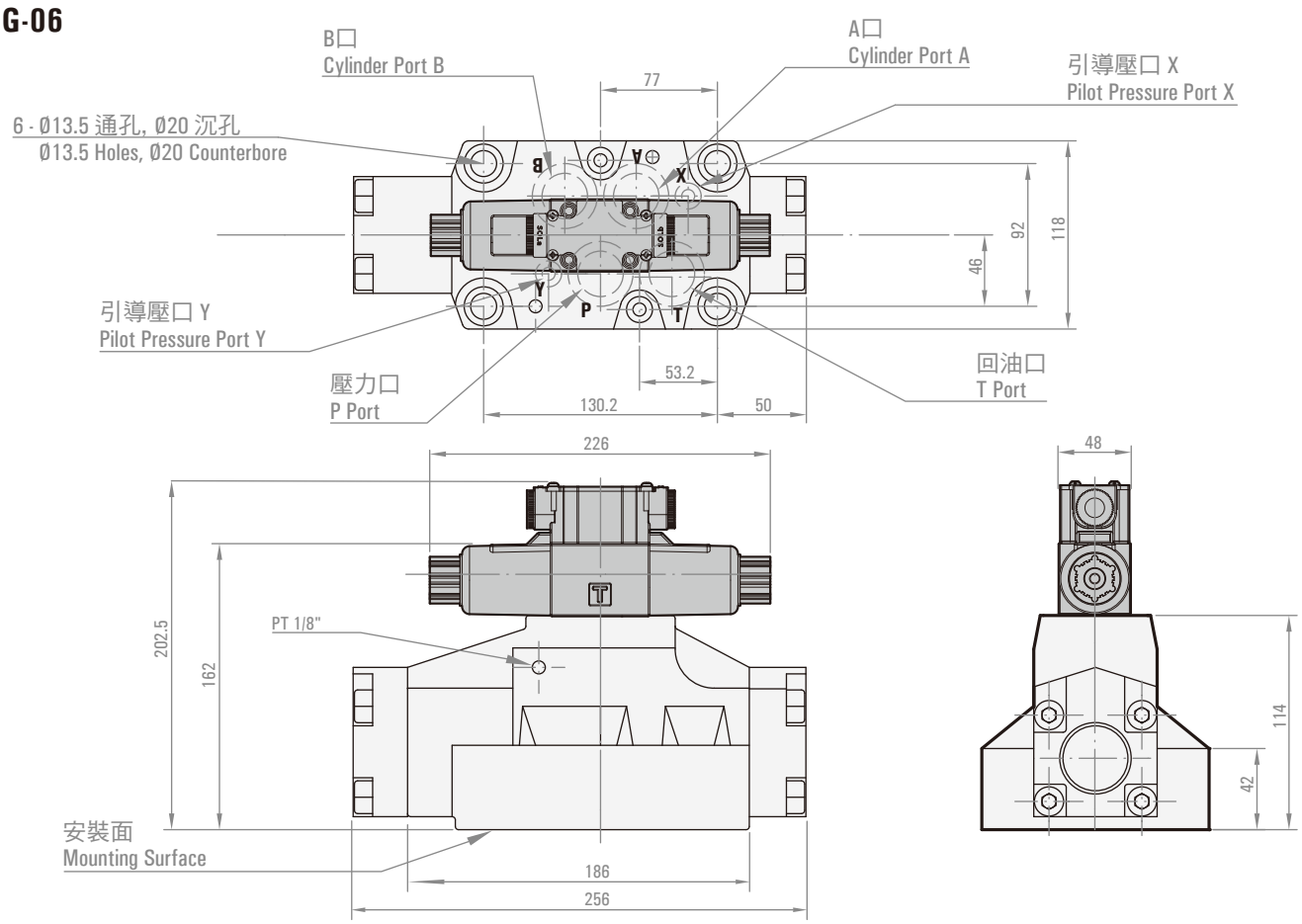

* 電磁閥需另購
Solenoid directional valve is sold separately

尺寸圖 DIMENSION (UNIT:MM)

DHG-04-AB

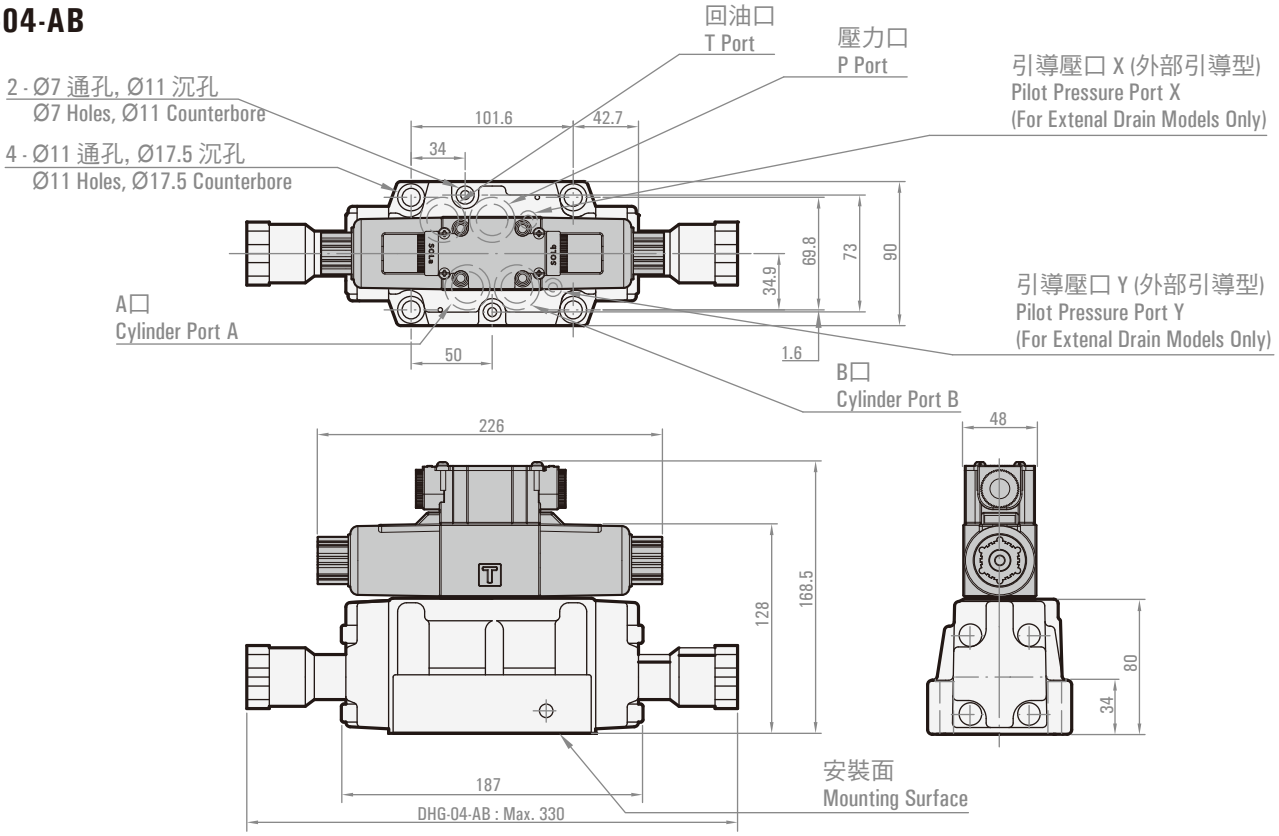

DHG-06-AB

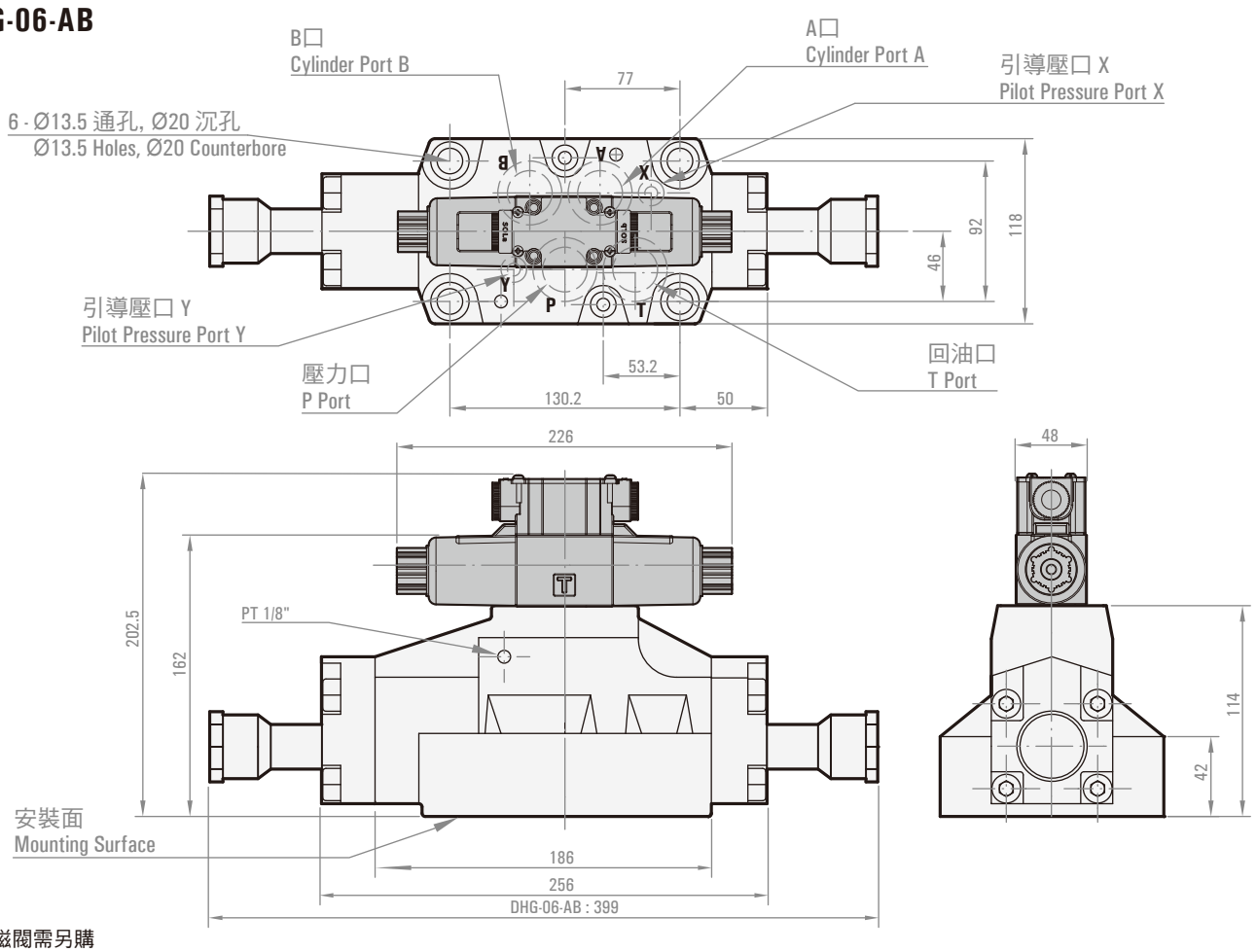

* 電磁閥需另購
Solenoid directional valve is sold separately

積層型控制閥
Modular Hydraulic Valve

閥體類型 MODULAR VALVE TYPE

型號 Model	功能 Function	閥體尺寸 Valve Sizes				符號 Symbols
		02	03	04	06	
MRV	積層型調壓閥 Modular Relief Valve	○	○	○	○	
MBRV	積層型減壓閥 Modular Reducing Valve	○	○	○	○	
MTV	積層型流量閥 Modular Flow Control Valve	○	○	-	-	
MTCV-P	積層型流量閥 Modular Flow Control Valve	○	○	-	-	
MTCV (Metre-out)	積層型流量閥附逆止閥 Modular Flow Control and Check Valve	○	○	○	○	
MTCV (Metre-in)	積層型流量閥附逆止閥 Modular Flow Control and Check Valve	○	○	○	○	
MPCV	積層型引導逆止閥 Modular Pilot Operated Check Valve	○	○	○	○	
MSCV	積層型抗衡閥 Modular Counter Balance Valve	○	○	-	-	
MCV	積層型逆止閥 Modular Check Valve	○	○	-	-	

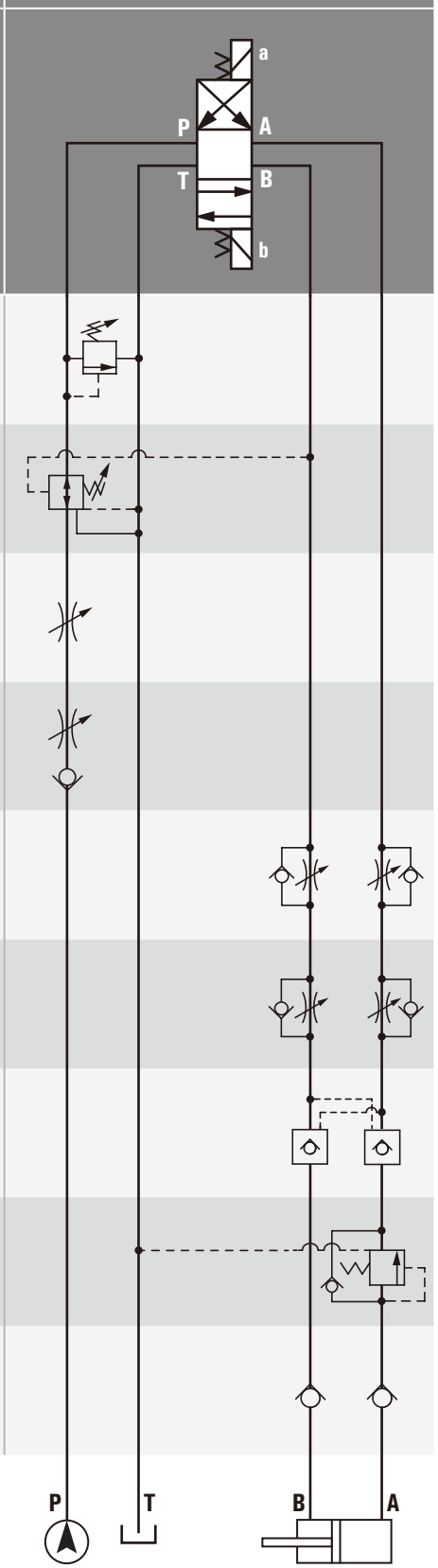

積層型調壓閥
Modular Relief Valve
MRV-02, 03, 04, 06

型號 Model	最大壓力 Max. Pressure (kgf/cm²)	壓力調整範圍 Pressure Adj. Range (kgf/cm²)	最大流量 Max. Flow (l/min)	重量 Weight (kg)
MRV-02-P, A, B	210	1 : 7～70 2 : 35～140 3 : 70～210	35	1.7
MRV-02-W			35	2.5
MRV-03-P, A, B			70	3.2
MRV-03-W			70	4.5
MRV-04-P, A, B			160	6.7
MRV-06-P, A, B			200	11.0

積層型減壓閥
Modular Reducing Valve
MBRV-02, 03, 04, 06

型號 Model	最大壓力 Max. Pressure (kgf/cm²)	壓力調整範圍 Pressure Adj. Range (kgf/cm²)	最大流量 Max. Flow (l/min)	重量 Weight (kg)
MBRV-02-P, A, B	210	0: 3～30 1: 8～70 2: 35～140 3: 70～210	35	1.3
MBRV-03-P, A, B			70	3.3
MBRV-04-P, A, B		1: 8～70 2: 35～140 3: 70～210	120	7.7
MBRV-06-P, A, B			180	11.0

積層型流量閥
Modular Flow Control Valve
MTV-02, 03

型號 Model	最大壓力 Max. Pressure (kgf/cm²)	最大流量 Max. Flow (l/min)	重量 Weight (kg)
MTV-02-P, T	210	35	1.1
MTV-03-P, T		70	2.6

積層型流量閥
Modular Flow Control Valve
MTCV-02, 03-P

型號 Model	最大壓力 Max. Pressure (kgf/cm²)	最大流量 Max. Flow (l/min)	重量 Weight (kg)
MTC V-02-P	210	35	1.1
MTCV-03-P		70	2.6

積層型流量閥附逆止閥
Modular Flow Control and Check Valve
MTCV-02, 03, 04, 06

型號 Model	最大壓力 Max. Pressure (kgf/cm²)	最大流量 Max. Flow (l/min)	重量 Weight (kg)
MTCV-02-A, B, W	210	35	1.4
MTCV-03-A, B, W		70	3.0
MTCV-04-A, B, W		120	6.0
MTCV-06-A, B, W		180	12.5

積層型引導逆止閥
Modular Pilot Operated Check Valve
MPCV-02, 03, 04, 06

型號 Model	最大壓力 Max. Pressure (kgf/cm²)	最大流量 Max. Flow (l/min)	重量 Weight (kg)
MPCV-02-A, B, W	210	35	1.3
MPCV-03-A, B, W		70	3.0
MPCV-04-A, B, W		120	7.0
MPCV-06-A, B, W		180	12.5

積層型抗衡閥
Modular Counter Balance Valve
MSCV-02, 03

型號 Model	最大壓力 Max. Pressure (kgf/cm²)	彈簧壓力 Checking Pressure (kgf/cm²)	最大流量 Max. Flow (l/min)	重量 Weight (kg)
MSCV-02-A, B	210	1 : 8～70 2 : 35～140 3 : 70～210	35	1.5
MSCV-03-A, B			70	4.1

積層型逆止閥
Modular Check Valve
MCV-02, 03

型號 Model	最大壓力 Max. Pressure (kgf/cm²)	彈簧壓力 Checking Pressure (kgf/cm²)	最大流量 Max. Flow (l/min)	重量 Weight (kg)
MCV-02- P, T, A, B, W	210	05 : 0.35 50 : 3.5	35	1.1
MCV-03- P, T, A, B, W			70	2.5

低噪音型先導式溢流閥

Low Noise Type Pilot Operated Relief Valve

SBG

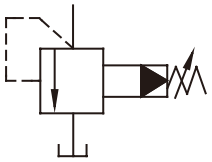

SBG -	06 -	3 -	R -	30
型號 Model Name	口徑 Thread Connection	壓力調整範圍 Pressure Adj. Range	調整把手方向 Knob Direction	設計編號 Design Number
SBG	03 : PT 3/8" 06 : PT 3/4" 10 : PT 5/4"	1 : 7～70 kgf/cm^2 2 : 35～140 kgf/cm^2 3 : 70～250 kgf/cm^2	R : 右 P 口側標準型 L : 左 T 口側 R : Right (P port side standard) L : Left (T port side)	30 : 標準型 31 : 調整把手直結型 30 : standard type 31 : adjust directly type

型號 Model	最大壓力 Max. Pressure (kgf/cm^2)	壓力調整範圍 Pressure Adj. Range (kgf/cm^2)	最大流量 Max. Flow (l/min)	
SBG-03	250	1 : 7～70 2 : 35～140 3 : 70～250	100	5
SBG-06			200	6.2
SBG-10			400	11.3

低噪音型電磁控制溢流閥

Low Noise Type Solenoid Controlled Relief Valve

SBSG

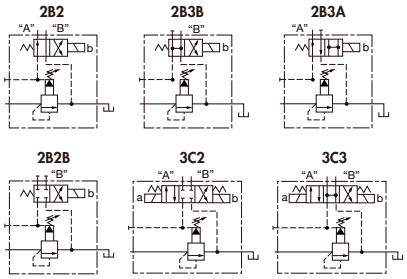

SBSG -	06 -	1PN -	3 -	R -	30
型號 Model Name	口徑 Thread Connection	作動型式 Vent Type	壓力調整範圍 Pressure Adj. Range	調整把手方向 Knob Direction	設計編號 Design Number
SBSG	03 : PT 3/8" 06 : PT 3/4" 10 : PT 5/4"	1PN : 常開式 1NP : 常閉式 1PN : normally vented 1NP : energized to vent	1 : 7～70 kgf/cm^2 2 : 35～140 kgf/cm^2 3 : 70～250 kgf/cm^2	R : 右 P 口側標準型 L : 左 T 口側 R : Right (P port side standard) L : Left (T port side)	30 : 標準型 31 : 調整把手直結型 30 : standard type 31 : adjust directly type

型號 Model	最大壓力 Max. Pressure (kgf/cm^2)	壓力調整範圍 Pressure Adj. Range (kgf/cm^2)	最大流量 Max. Flow (l/min)	重量 Weight (kg)
SBSG-03	250	1 : 7～70 2 : 35～140 3 : 70～250	100	5
SBSG-06			200	6.2
SBSG-10			400	11.3

先導式溢流閥
Pilot Operated Relief Valve

BG

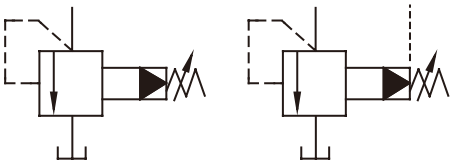

BG -	06 -	3 -	30
型號 Model Name	口徑 Thread Connection	壓力調整範圍 Pressure Adj. Range	設計編號 Design Number
BG	03 : PT 3/8" 06 : PT 3/4" 10 : PT 5/4"	1 : 7～70 kgf/cm2 2 : 35～140 kgf/cm2 3 : 70～250 kgf/cm2	30 : 標準型 31 : 調整把手直結型 30 : standard type 31 : adjust directly type

型號 Model	最大壓力 Max. Pressure (kgf/cm^2)	壓力調整範圍 Pressure Adj. Range (kgf/cm^2)	最大流量 Max. Flow (l/min)	重量 Weight (kg)
BG-03	250	1 : 7～70 2 : 35～140 3 : 70～250	100	5
BG-06			200	6.2
BG-10			400	12.5

電磁控制溢流閥
Solenoid Controlled Relief Valve

BSG

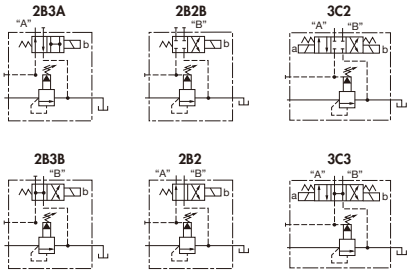

BSG -	06 -	1PN -	3 -	30
型號 Model Name	口徑 Thread Connection	作動型式 Vent Type	壓力調整範圍 Pressure Adj. Range	設計編號 Design Number
BSG	03 : PT 3/8" 06 : PT 3/4" 10 : PT 5/4"	1PN : 常開式 1NP : 常閉式 1PN : normally vented 1NP : energized to vent	1 : 7～70 kgf/cm^2 2 : 35～140 kgf/cm^2 3 : 70～250 kgf/cm^2	30 : 標準型 31 : 調整把手直結型 30 : standard type 31 : adjust directly type

型號 Model	最大壓力 Max. Pressure (kgf/cm^2)	壓力調整範圍 Pressure Adj. Range (kgf/cm^2)	最大流量 Max. Flow (l/min)	重量 Weight (kg)
BSG-03	250	1 : 7～70 2 : 35～140 3 : 70～250	100	5.6
BSG-06			200	7.1
BSG-10			400	11.8

電磁流量控制閥
Solenoid Throttle Valve
FKCS, FPR-MGKS

型號 Model	流量調整範圍 Flow Adj. Range (l/min)	口徑 Thread Connection	自由流量 Free Flow (l/min)	最大使用壓力 Max. Pressure (kgf/cm^2)
FKCS 002-02	0.1 - 2	PT 3/8"	30 - 60	70 - 140
FKCS 004-02	0.1 - 4			
FKCS 006-02	0.1 - 6			
FKCS 002-03	0.1 - 2	PT 3/8"	30 - 60	70 - 140
FKCS 004-03	0.1 - 4			
FKCS 006-03	0.1 - 6			
FPR-MGKS 002-03	0.1 - 2	PT 3/8"	30 - 60	70 - 140
FPR-MGKS 004-03	0.1 - 4			
FPR-MGKS 008-03	0.1 - 8			
FPR-MGKS 012-03	0.1 - 12			

電磁流量控制閥
Solenoid Throttle Valve
FMS-GO

型號 Model	流量調整範圍 Flow Adj. Range (l/min)	口徑 Thread Connection	自由流量 Free Flow (l/min)	最大使用壓力 Max. Pressure (kgf/cm^2)
FMS-GO 02-02 T, P, A	0.1 - 2	PT 1/4"	20	70 - 140
FMS-GO 04-02 T, P, A	0.1 - 4			
FMS-GO 08-02 T, P, A	0.1 - 8			
FMS-GO 02-03 T, P, A	0.1 - 2	PT 3/8"	30 - 60	70 - 140
FMS-GO 04-03 T, P, A	0.1 - 4			
FMS-GO 08-03 T, P, A	0.1 - 8			
FMS-GO 12-03 T, P, A	0.1 - 12			

流量控制閥
Throttle Valve
FKC-G-A

型號 Model	流量調整範圍 Flow Adj. Range (l/min)	口徑 Thread Connection	自由流量 Free Flow (l/min)	最大使用壓力 Max. Pressure (kgf/cm^2)
FKC-G 02001-02A	0.1 - 1	PT 1/4"	20	70
FKC-G 02002-02A	0.1 - 2			
FKC-G 02004-02A	0.1 - 4			
FKC-G 02001-02LA	0.1 - 1	PT 1/4"	20	70
FKC-G 02002-02LA	0.1 - 2			
FKC-G 02004-02LA	0.1 - 4			
FKC-G 002-03A	0.1 - 2	PT 3/8"	30	70
FKC-G 004-03A	0.1 - 4			
FKC-G 008-03A	0.1 - 8			

流量控制閥
Throttle Valve
FKC-G-B

型號 Model	流量調整範圍 Flow Adj. Range (l/min)	口徑 Thread Connection	自由流量 Free Flow (l/min)	最大使用壓力 Max. Pressure (kgf/cm^2)
FKC-G 02001-02B	0.1 - 1	PT 1/4"	20	70
FKC-G 02002-02B	0.1 - 2			
FKC-G 02004-02B	0.1 - 4			
FKC-G 002-03B	0.1 - 2	PT 3/8"	30	70
FKC-G 004-03B	0.1 - 4			
FKC-G 008-03B	0.1 - 8			

4Man

MEXICO BRANCH OFFICE
Roberto Diaz No. 401
Ciudad Industrial
Aguascalientes, Ags.
México
20290

4ManPro@4ManPro.com
(449) 171 3420
www.4ManPro.com/SPA/

USA BRANCH OFFICE
4ManPro®
708 Main St.
10th Floor
Houston, Tx, USA
77002

4ManPro-USA@4ManPro.com
+1 (832) 871 5022
www.4ManPro.com/ENG/

Elements For Manufacturing Processes