4ManPro

Elements For Manufacturing Processes

HI HYDROME

VÁLVULAS DE CONTROL DE PRESIÓN

DIRECT OPERATED TYPE RELIEF VALVE

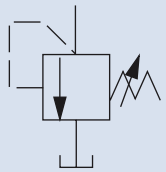

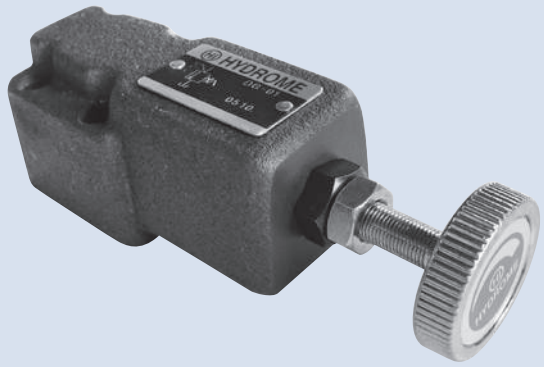

A

How to order

D G - 01 - H
1 2 3 4

1	Model
2	Mounting type G: Sub-plate mounting T: Thread connection
3	Valve size 01: 1/8" remote control 02: 1/4" relief valve
4	Pressure adjusting range B: 5~70 bar C: 10~140 bar H: 35~230 bar 2H: 140~320 bar (for 01)

Specifications

Model		Max. Operating Pressure(bar)	Pressure Adj. Range (bar)	Max. Flow (ipm)	Weight (kg)	Bolt Size DG-※※
Sub-Plate Mounting	Thread Connection					
DG-01	DT-01	300	B: 5~70, C: 10~140, H: 35~230, 2H: 140~320	2	1.5	M5 x 40L
DG-02	DT-02	250	B: 5~70, C: 10~140, H: 35~230	16	1.6	M5 x 45L

DG-01-※-K Is linked type remote control relief valve for low backpressure using.

Dimensions

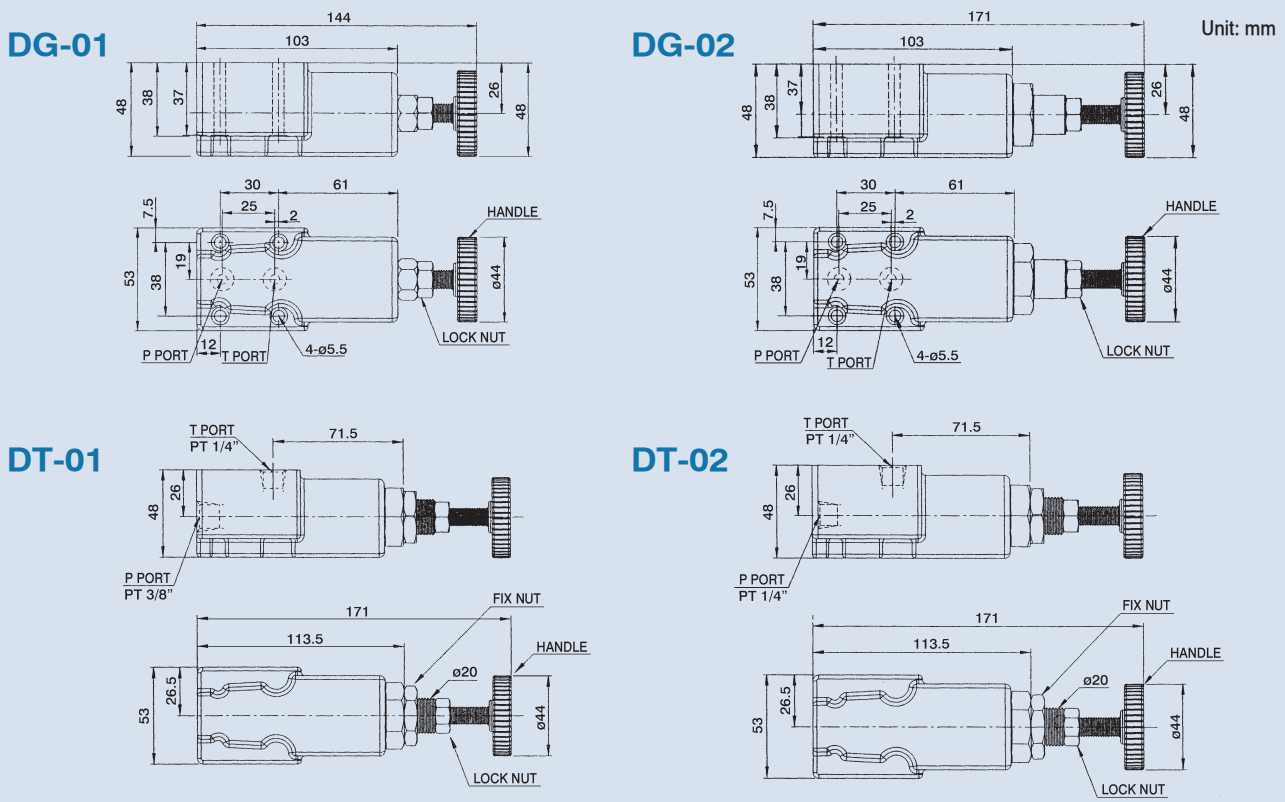

BALANCE PISTON TYPE PILOT OPERATED RELIEF VALVE

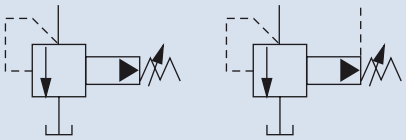

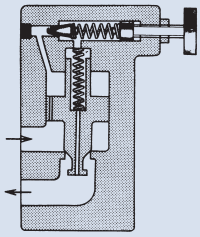

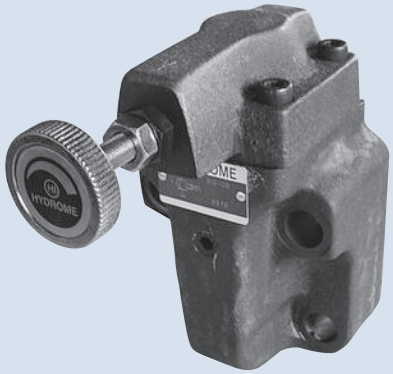

A

How to order

B G - 06 - H
1 2 3 4

1	Model
2	Mounting type G: Sub-plate mounting
3	Valve size 03: 3/8" 06: 3/4" 10: 1-1/4"
4	Pressure adjusting range B: 5~70 bar C: 10~140 bar H: 35~230 bar 2H: 140~320 bar

Specifications

Model	Max. Operating Pressure (bar)	Pressure Adj. Range (bar)	Max. Flow (lpm)	Weight (kg)	Bolt Size
BG-03	300	B: 5~70 C: 10~140 H: 35~230 2H: 140~320	100	5	M12 x 70L x 2pcs M12 x 90L x 2pcs
BG-06			200	6.2	M16 x 55L x 2pcs M16 x 75L x 2pcs
BG-10			400	10	M20 x 70L x 2pcs M20 x 90L x 2pcs

Dimensions

Unit: mm

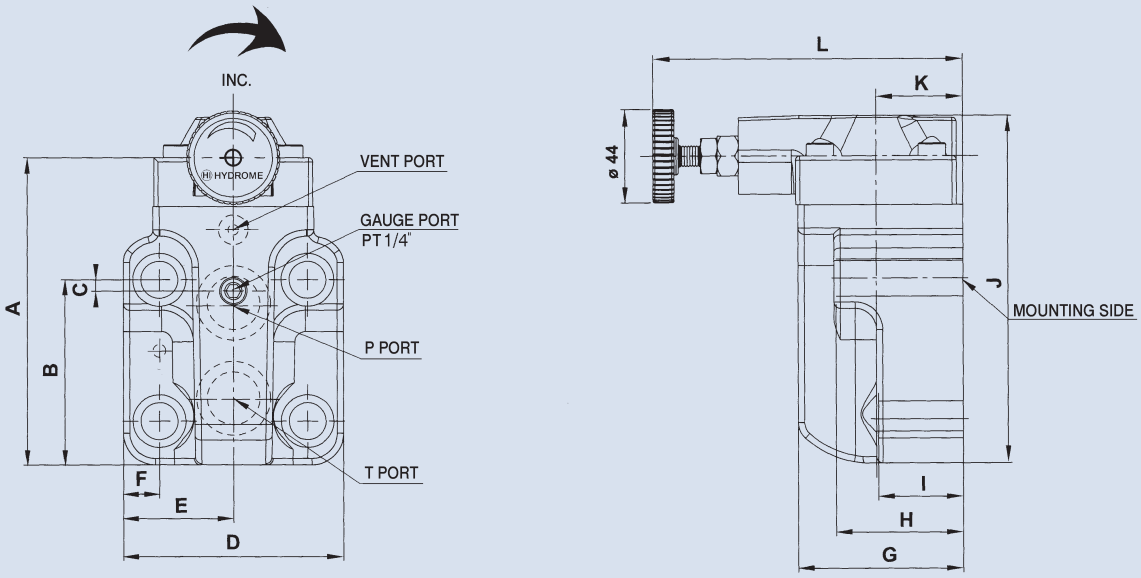

Model	A	B	C	D	E	F	G	H	I	J	K	L
BG-03	117	75.5	21.5	83	41.5	14.5	78	77.5	58.5	136	41	146
BG-06	145	87.5	5.5	104	52	17	78	60	40	164	41	146
BG-10	175	106	8	125	62.5	21.2	90	69.5	49.5	195	46	155

BALANCE PISTON TYPE PILOT OPERATED RELIEF VALVE

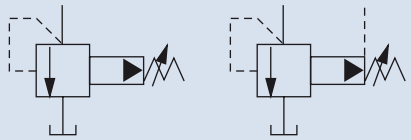

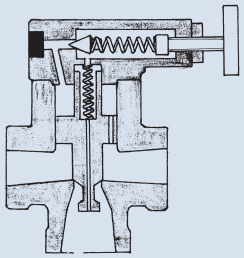

A

How to order

B T - 06 - H
1 2 3 4

1	Model
2	Mounting type T: Thread connection
3	Valve size 03: 3/8" 04: 1/2" 06: 3/4" 10: 1-1/4"
4	Pressure adjusting range B: 5~70 bar C: 10~140 bar H: 35~230 bar 2H: 140~320 bar

Specifications

Model	Max. Operating Pressure (bar)	Pressure Adj. Range (bar)	Max. Flow (lpm)	Weight (kg)
BT-03	300	B: 5~70	60	2.5
BT-04		C: 10~140	100	2.5
BT-06		H: 35~230	200	4
BT-10		2H: 140~320	400	8.5

Dimensions

Unit: mm

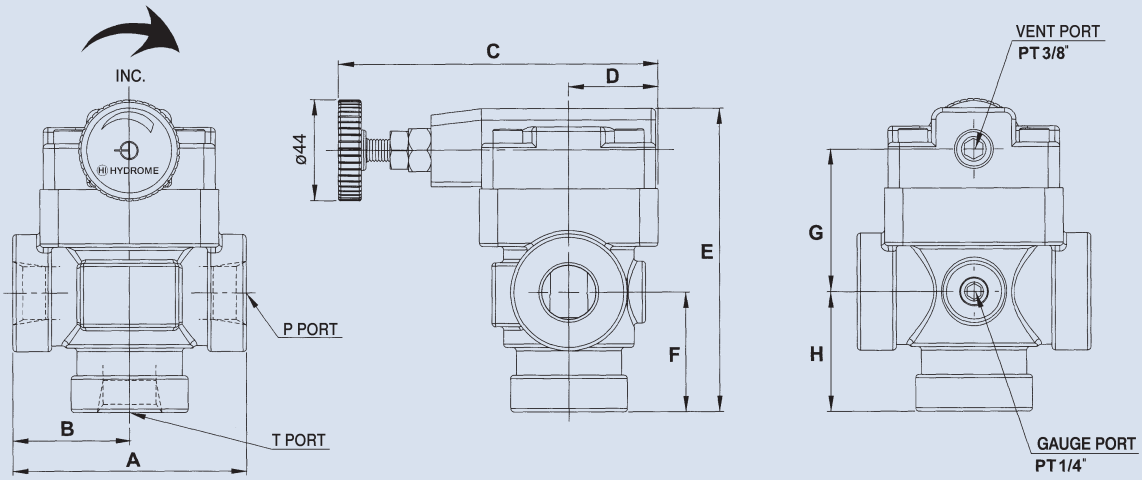

Model	A	B	C	D	E	F	G	H
BT-03	77	38.5	132	31.5	123	42	65	42
BT-06	102	51	140	39	132	52	62	52
BT-10	140	70	152	48	191	84	86	82

BALANCE PISTON TYPE PILOT OPERATED RELIEF VALVE

Performance curves

BT / BG series Test Fluid Viscosity: 35 CST

BT-03, BG-03

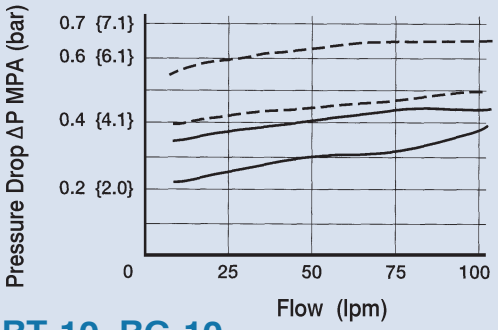

BT-06, BG-06

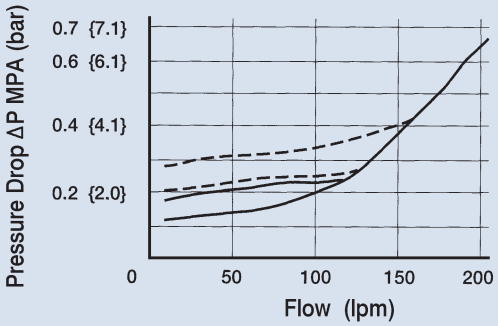

BT-10, BG-10

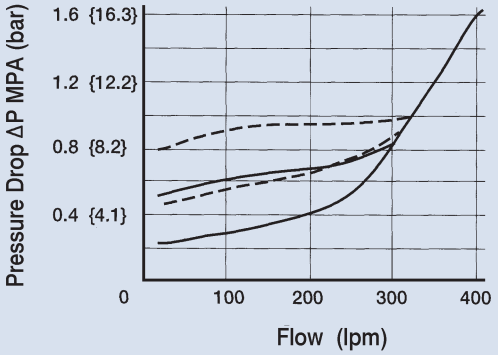

BT-03, BG-03

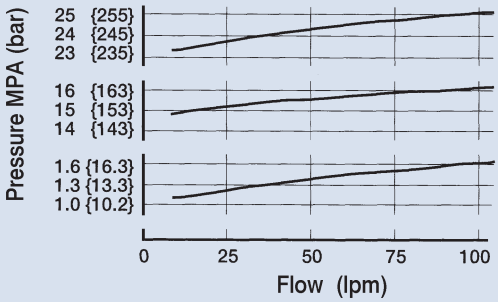

BT-06, BG-06

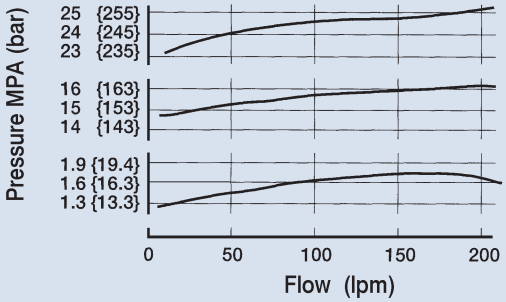

BT-10, BG-10

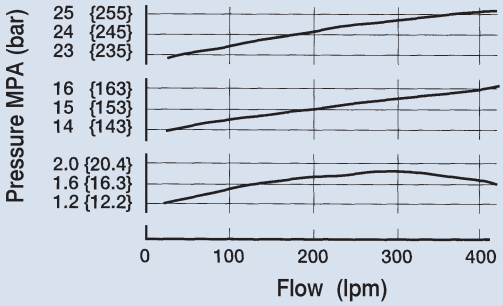

A

BALANCE PISTON TYPE PILOT OPERATED RELIEF VALVE

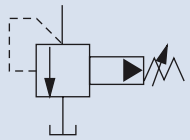

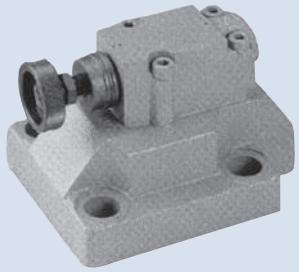

A

How to order

DB - 10 - ※

1 2 3

1	Model Sub-plate mounting
2	Valve size 10: 3/8" 20: 3/4" 30: 1-1/4"
3	Pressure adjusting range B: 5~70 bar C: 7~140 bar H: 35~230 bar 2H: 140~330 bar

Specifications

Model	Max. Operating Pressure (bar)	Pressure Adj. Range (bar)	Max. Flow (lpm)	Weight (kg)	Bolt Size
DB-10	350	B: 5~70 C: 7~140 H: 35~230 2H: 140~330	150	3.5	M12 x 40L
DB-20			250	4.5	M16 x 45L
DB-30			500	6	M20 x 55L

Dimensions

Unit: mm

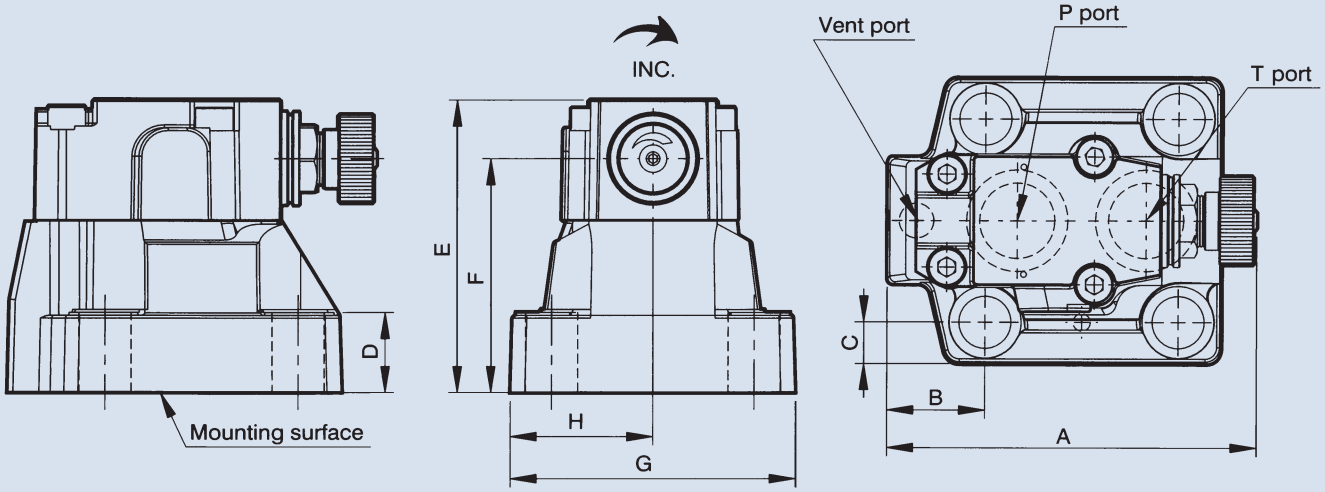

Model	A	B	C	D	E	F	G	H
DB-10	120	27.2	12.1	27	103.6	83.5	78	39
DB-20	126.5	33.8	14.25	27.5	100.6	80.5	98.5	49.25
DB-30	150	42	15.9	29	103.6	83.5	114.5	57.25

BALANCE PISTON TYPE PILOT OPERATED RELIEF VALVE

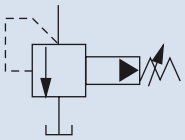

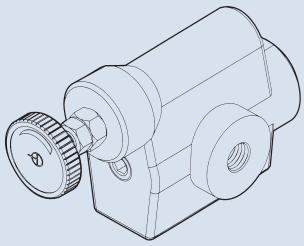

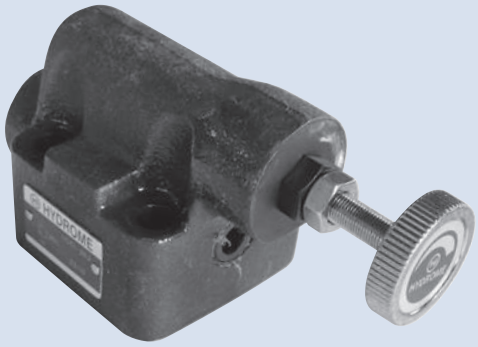

A

How to order

HDRI - G 03 - ※

1 2 3 4

1	Model
2	Mounting type G: Sub-plate mounting T: Thread connection
3	Valve size 3/8"
4	Pressure adjusting range 1: 5~70 bar 2: 35~230 bar

Specifications

Model		Max. Operating Pressure (bar)	Pressure Adj. Range (bar)	Max. Flow (ipm)	Weight (kg)		Bolt Size HDRI-G03
Sub-Plate Mounting	Thread Connection				G Type	T Type	
HDRI-G03	HDRI-T03	250	1: 5~70 2: 35~230	100	3.5	3	M10 x 55L

Dimensions

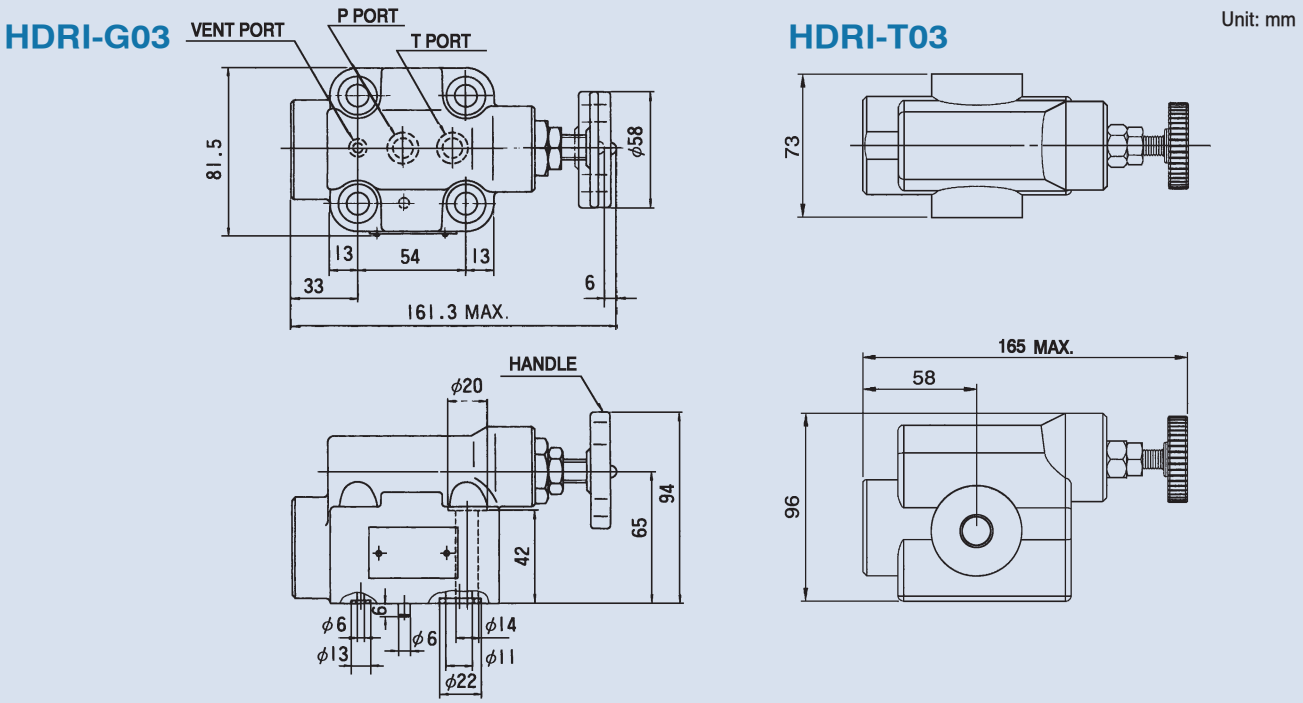

LOW NOISE TYPE PILOT OPERATED RELIEF VALVE

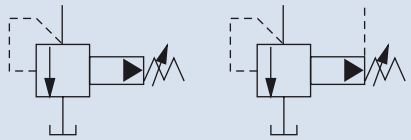

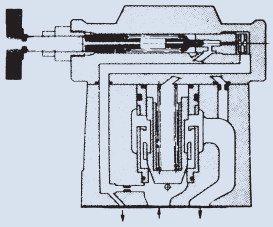

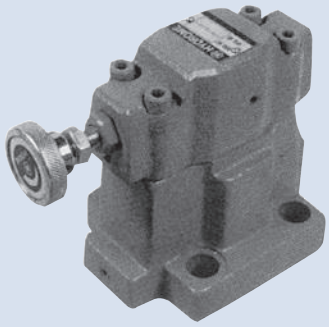

A

How to order

SB G - 06 - H - R
1 2 3 4 5

1	Model
2	Mounting type G: Sub-plate mounting
3	Valve size 03: 3/8" 06: 3/4" 10: 1-1/4"
4	Pressure adjusting range B: 5~70 bar C: 10~140 bar H: 35~230 bar 2H: 140~320 bar
5	Handle position R: Handle at P port (standard, no remarking) L: Handle at T port

Specifications

Model	Max. Operating Pressure (bar)	Pressure Adj. Range (bar)	Max. Flow (lpm)	Weight (kg)	Bolt Size
SBG-03	300	B: 5~70 C: 10~140 H: 35~230 2H: 140~320	100	4.7	M12 x 40L
SBG-06			200	6	M16 x 45L
SBG-10			400	9.5	M20 x 60L

Dimensions

Unit: mm

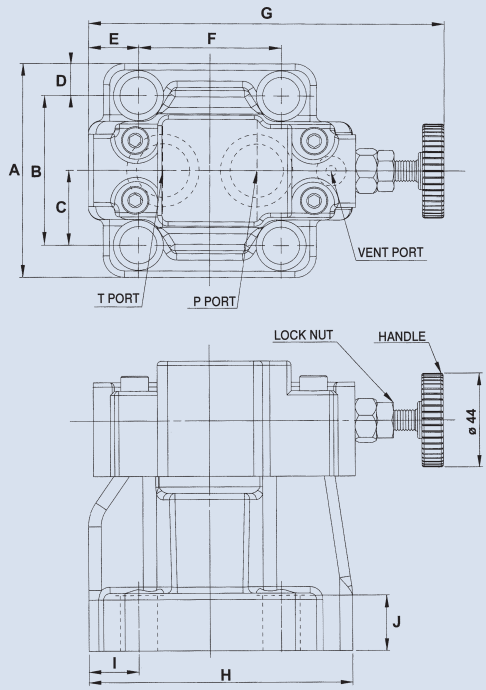

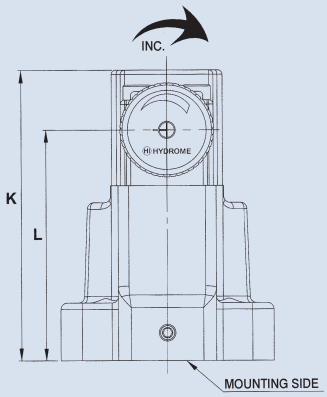

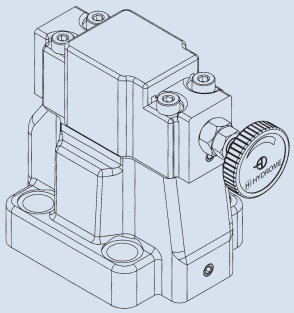

Model	A	B	C	D	E	F
SBG-03	78	54	27	12	34.5	54
SBG-06	100	70	35	15	23.5	67
SBG-10	127	82.6	41.3	22.2	20.5	89

Model	G	H	I	J	K	L
SBG-03	165	107	26.5	23	134	106
SBG-06	167	124	23.5	26	136	108
SBG-10	185	155	20.5	36	145	120

LOW NOISE TYPE PILOT OPERATED RELIEF VALVE

Performance curves

SBG series **Test Fluid Viscosity: 35 CST**

Unit: mm

SBG-03

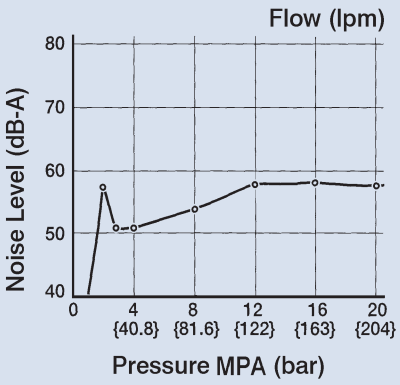

SBG-06

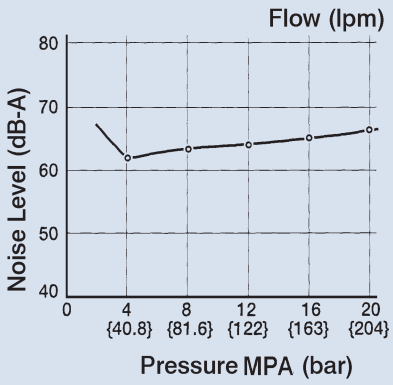

SBG-10

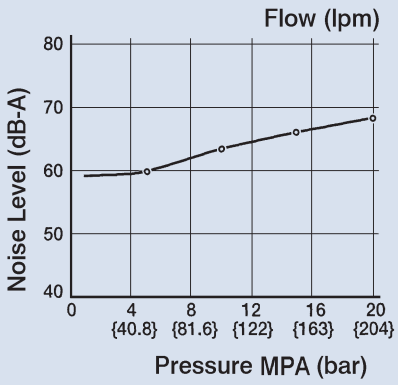

SBG-03

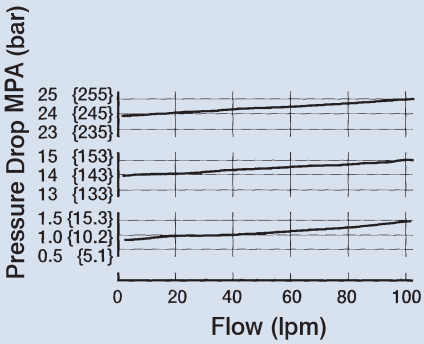

SBG-06

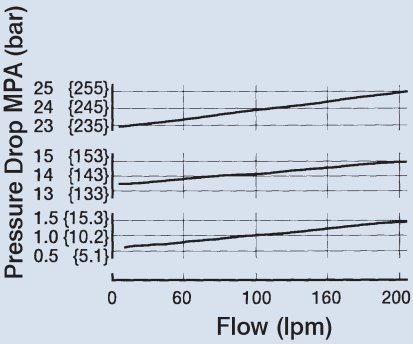

SBG-10

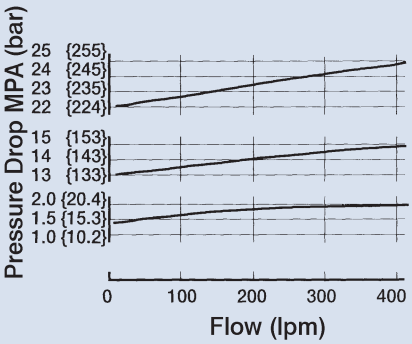

SBG-03

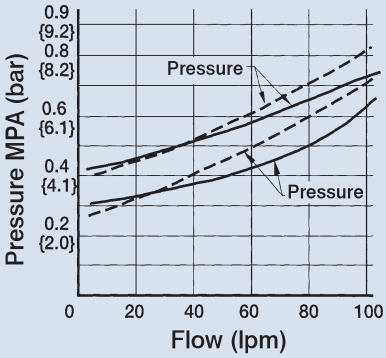

SBG-06

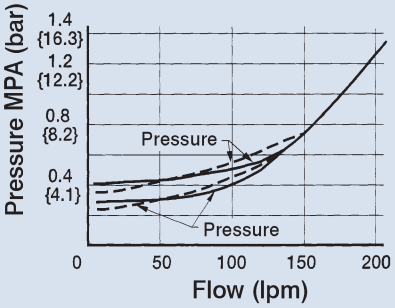

SBG-10

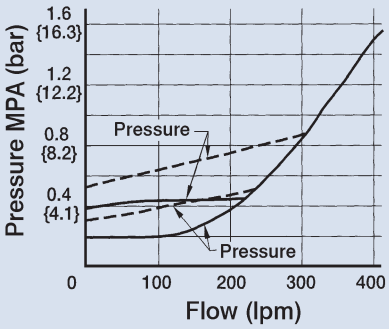

A

SOLENOID CONTROLLED PILOT OPERATED RELIEF VALVE

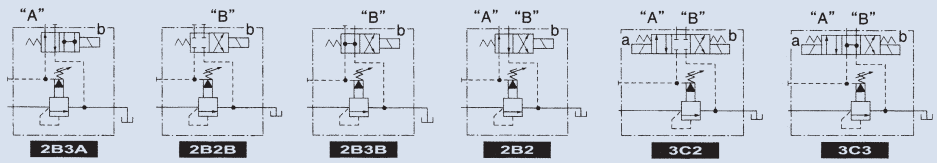

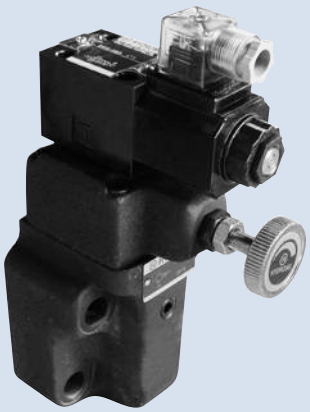

A

How to order

BS G - 06 - H - 2B2 - A22

1 2 3 4 5 6

1	Model
2	Mounting type G: Sub-plate mounting
3	Valve size 03: 3/8" 06: 3/4" 10: 1-1/4"
4	Pressure adjusting range B: 5~70 bar C: 10~140 bar H: 35~230 bar 2H: 140~320 bar
5	Vent type
6	Voltage A11: AC110V (50/60HZ) A22: AC220V (50/60HZ) A24: AC240V (50HZ) A38: AC380V (50HZ) D1: DC12V D2: DC24V

Specifications

Model	Max. Operating Pressure (bar)	Pressure Adj. Range (bar)	Max. Flow (lpm)	Weight (kg)	Bolt Size
BSG-03	300	B: 5~70 C: 10~140 H: 35~230 2H: 140~320	100	5.6	M12 x 70L x 2pcs M12 x 90L x 2pcs
BSG-06			200	7	M16 x 55L x 2pcs M16 x 75L x 2pcs
BSG-10			400	10.8	M20 x 70L x 2pcs M20 x 90L x 2pcs

Dimensions

Unit: mm

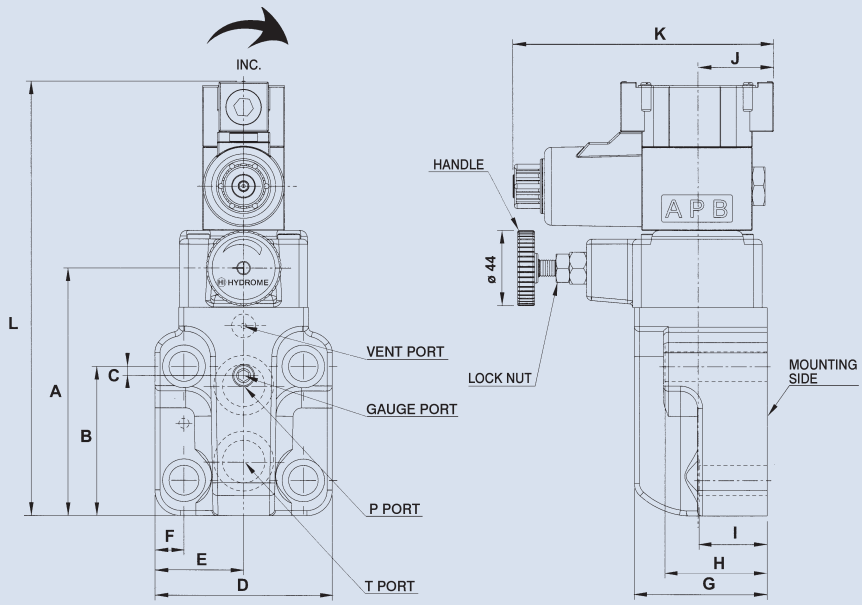

Model	A	B	C	D	E	F
BSG-03	117	75.5	21.5	83	41.5	14.5
BSG-06	145	87.5	5.5	104	52	17
BSG-10	175	106	8	125	62.5	21.2

Model	G	H	I	J	K	L
BSG-03	78	77.5	58.5	45	153	226
BSG-06	78	60	40	45	153	255
BSG-10	90	69.5	49.5	50	153	285

SOLENOID CONTROLLED PILOT OPERATED RELIEF VALVE

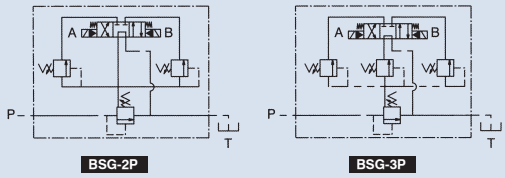

A

How to order

BS G - 06 - H - 2P - 3C60 - A22

1 2 3 4 5 6 7

1	Model
2	Mounting type G: Sub-plate mounting
3	Valve size 03: 3/8" 06: 3/4" 10: 1-1/4"
4	Pressure adjusting range B: 5~70 bar C: 10~140 bar H: 35~230 bar 2H: 140~320 bar
5	2P: Dual pressure adjusting ranges 3P: Three pressure adjusting ranges
6	Vent type 3C3 3C60
7	Voltage A11: AC110V (50/60HZ) A22: AC220V (50/60HZ) A24: AC240V (50HZ) A38: AC380V (50HZ) D1: DC12V D2: DC24V

Specifications

Model	Max. Operating Pressure (bar)	Pressure Adj. Range (bar)	Max. Flow (lpm)	Weight (kg)	Bolt Size
BSG-03	300	B: 5~70 C: 10~140 H: 35~230 2H: 140~320	100	7.5	M12 x 70L x 2pcs M12 x 90L x 2pcs
BSG-06			200	8.7	M16 x 55L x 2pcs M16 x 75L x 2pcs
BSG-10			400	12.5	M20 x 70L x 2pcs M20 x 90L x 2pcs

Dimensions

Unit: mm

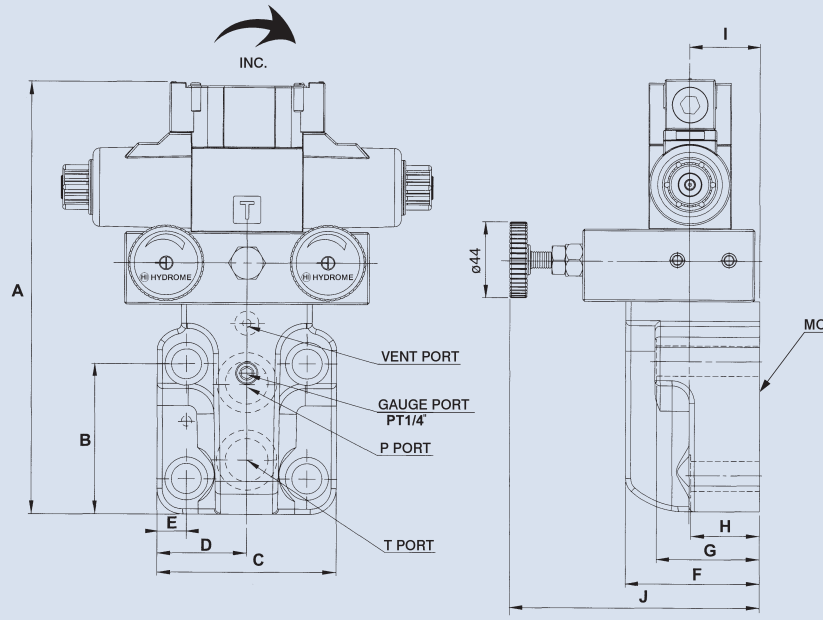

Model	A	B	C	D	E
BSG-03-2P	224	75.5	83	41.5	14.5
BSG-06-2P	251.5	87.5	104	52	17
BSG-10-2P	289.5	106	125	62.5	21.2

Model	F	G	H	I	J
BSG-03-2P	70	77.5	40	41	146
BSG-06-2P	78	60	40	41	146
BSG-10-2P	83	69.5	49.5	46	280

SOLENOID CONTROLLED PILOT OPERATED RELIEF VALVE

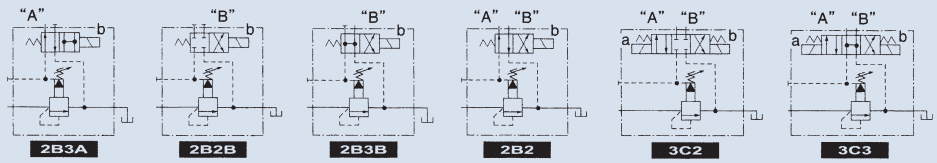

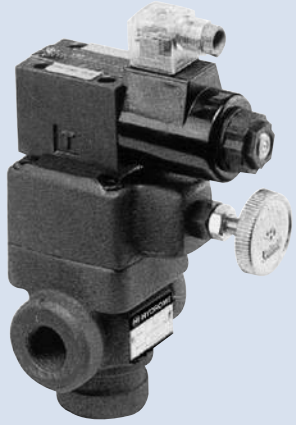

A

How to order

BS T - 06 - H - 2B2 - A22

1 2 3 4 5 6

1	Model
2	Mounting type T: Thread connection
3	Valve size 03: 3/8" 04: 1/2" 06: 3/4" 10: 1-1/4"
4	Pressure adjusting range B: 5~70 bar C: 10~140 bar H: 35~230 bar 2H: 140~320 bar
5	Vent type
6	Voltage A11: AC110V (50/60HZ) A22: AC220V (50/60HZ) A24: AC240V (50HZ) A38: AC380V (50HZ) D1: DC12V D2: DC24V

Specifications

Model	Max. Operating Pressure (bar)	Pressure Adj. Range (bar)	Max. Flow (lpm)	Weight (kg)
BST-03	300	B: 5~70	60	4.6
BST-04		C: 10~140	100	4.6
BST-06		H: 35~230	200	4.6
BST-10		2H: 140~320	400	9.4

Dimensions

Unit: mm

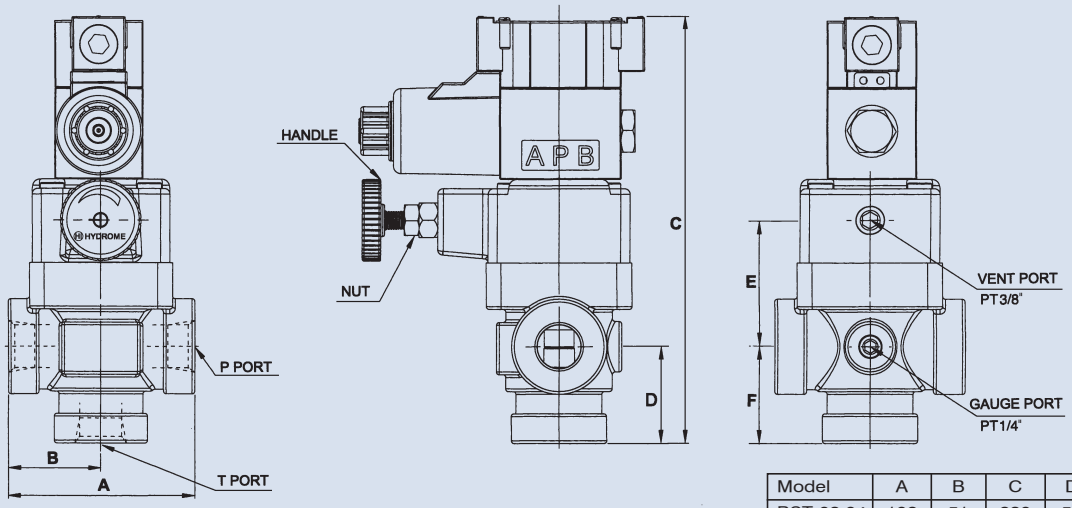

Model	A	B	C	D	E	F
BST-03,04	102	51	230	52	68	52
BST-06	120	51	230	52	68	52
BST-10	140	70	284	84	86	82

SOLENOID CONTROLLED PILOT OPERATED RELIEF VALVE

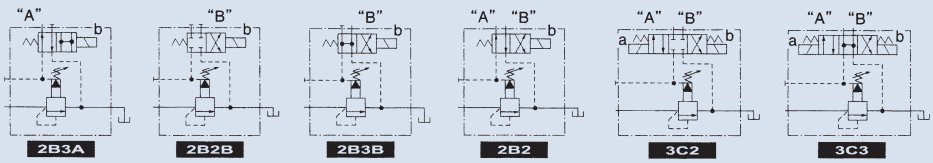

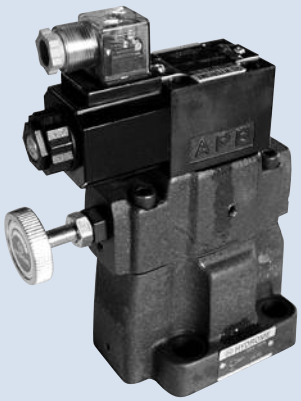

A

How to order

SBS G - 06 - H - 2B2 - A22

1 2 3 4 5 6

1	Model
2	Mounting type G: Sub-plate mounting
3	Valve size 03: 3/8" 06: 3/4" 10: 1-1/4"
4	Pressure adjusting range B: 5~70 bar C: 10~140 bar H: 35~230 bar 2H: 140~320 bar
5	Vent type
6	Voltage A11: AC110V (50/60HZ) A22: AC220V (50/60HZ) A24: AC240V (50HZ) A38: AC380V (50HZ) D1: DC12V D2: DC24V

Specifications

Model	Max. Operating Pressure (bar)	Pressure Adj. Range (bar)	Max. Flow (lpm)	Weight (kg)	Bolt Size
SBSG-03	300	B: 5~70 C: 10~140 H: 35~230 2H: 140~320	100	5	M12 x 40L
SBSG-06			200	6.2	M16 x 45L
SBSG-10			400	9.5	M20 x 60L

Dimensions

Unit: mm

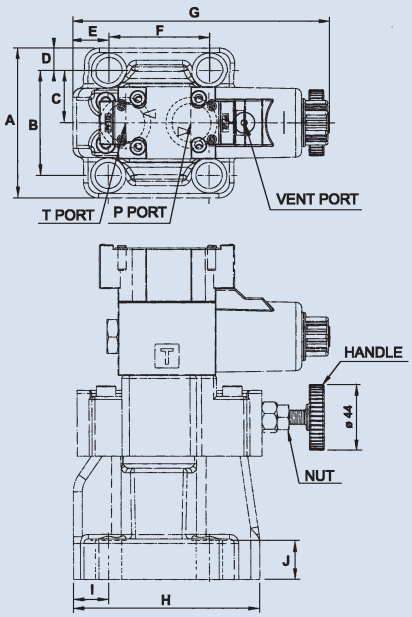

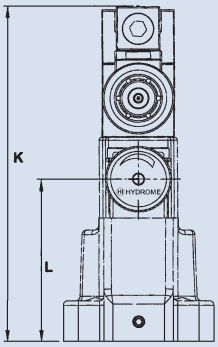

Model	A	B	C	D	E	F
SBSG-03	78	54	27	12	34.5	54
SBSG-06	100	70	35	15	23.5	67
SBSG-10	127	82.6	41.3	22.2	20.5	89

Model	G	H	I	J	K	L
SBSG-03	169	107	26.5	23	222	106
SBSG-06	171	124	23.5	26	224	108
SBSG-10	190	155	20.5	36	273	120

SOLENOID CONTROLLED PILOT OPERATED RELIEF VALVE

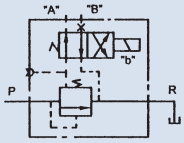

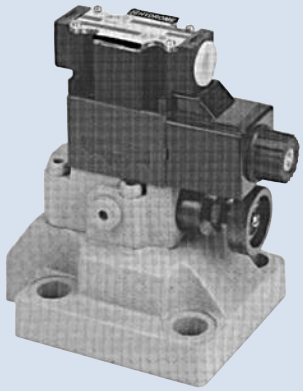

A

How to order

DBW - 10 - H - A22
1 2 3 4

1	Model	Sub-plate mounting
2	Valve size	10: 3/8" 20: 3/4" 30: 1-1/4"
3	Pressure adjusting range	B: 5~70 bar C: 7~140 bar H: 35~230 bar 2H: 140~330 bar
4	Voltage	A11: AC110V (50/60HZ) A22: AC220V (50/60HZ) A24: AC240V (50HZ) A38: AC380V (50HZ) D1: DC12V D2: DC24V

Specifications

Model	Max. Operating Pressure (bar)	Pressure Adj. Range (bar)	Max. Flow (lpm)	Weight (kg)	Bolt Size
DBW-10	350	B: 5~70 C: 7~140 H: 35~230 2H: 140~330	150	3.5	M12 x 40L
DBW-20			250	4.5	M16 x 45L
DBW-30			500	6	M20 x 60L

Dimensions

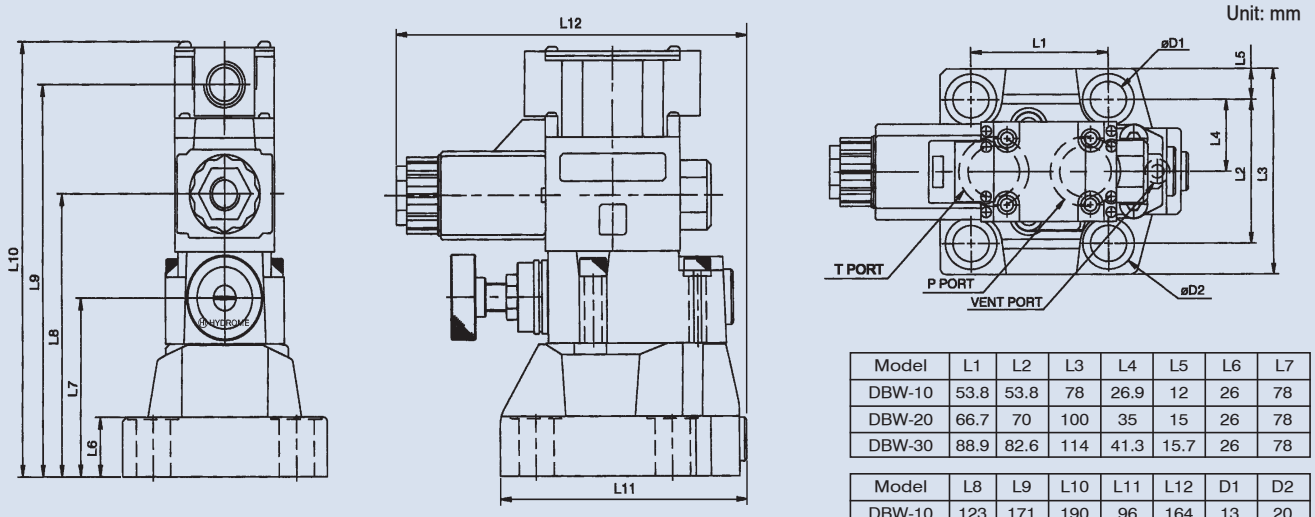

Model	L1	L2	L3	L4	L5	L6	L7
DBW-10	53.8	53.8	78	26.9	12	26	78
DBW-20	66.7	70	100	35	15	26	78
DBW-30	88.9	82.6	114	41.3	15.7	26	78

Model	L8	L9	L10	L11	L12	D1	D2
DBW-10	123	171	190	96	164	13	20
DBW-20	123	171	190	120.5	171	17.5	25
DBW-30	123	171	190	151	183	21.5	30

BACK PRESSURE CONTROL VALVE

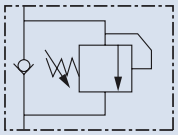

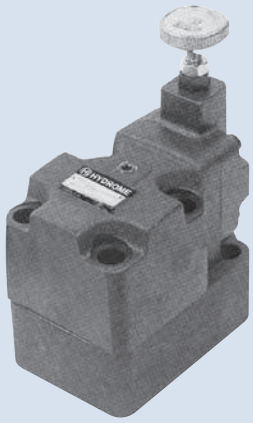

A

How to order

BR - 06 - B
1 2 3

1	Model
2	Valve size 03: 3/8" 06: 3/4" 10: 1-1/4"
3	Pressure adjusting range B: 5~70 bar C: 10~140 bar

Specifications

Model	Max. Operating Pressure (bar)	Pressure Adj. Range (bar)	Max. Flow (lpm)	Weight (kg)	Bolt Size
BR-03	250	B: 5~70 C: 10~140	100	7.5	M12 x 110L x 2pcs M12 x 130L x 2pcs
BR-06			200	11	M16 x 120L x 2pcs M16 x 140L x 2pcs
BR-10			400	19	M20 x 140L x 2pcs M20 x 160L x 2pcs

Dimensions

Unit: mm

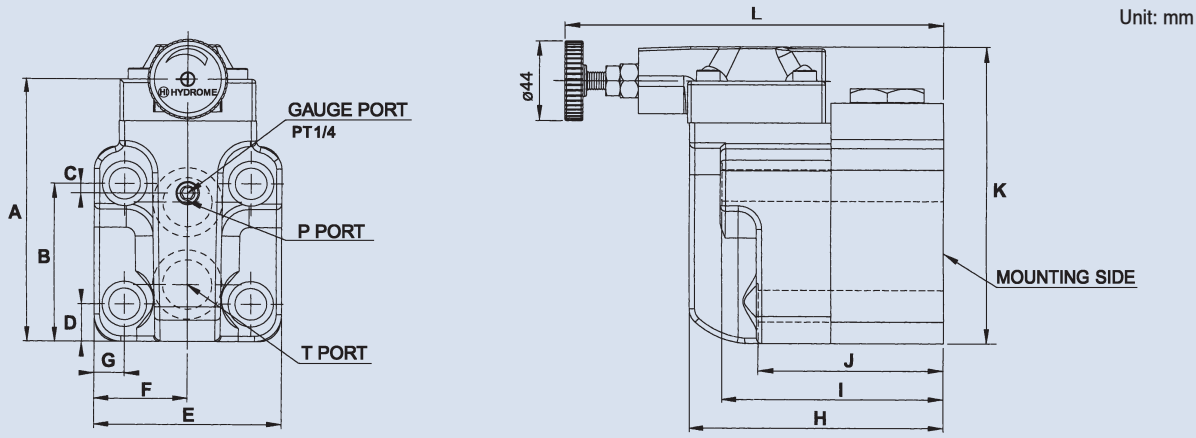

Model	A	B	C	D	E	F	G	H	I	J	K	L
BR-03	120.5	79.5	22	25.7	83	41.5	14.6	117	116.5	97.5	139.5	190.3
BR-06	148	86	1	19.3	104	52	17	118	97	87	167	186.4
BR-10	181	112.7	8	23.8	125	62.5	21.2	163	142.5	122.5	201.7	230

UNLOADING RELIEF VALVE

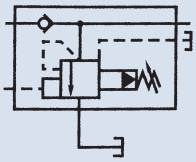

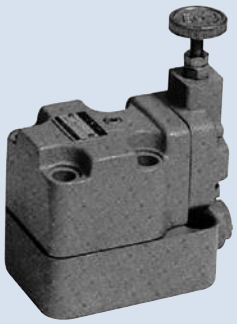

A

How to order

BUC G - 06 - H

1 2 3 4

1	Model
2	Mounting type G: Sub-plate mounting
3	Valve size 03: 3/8" 06: 3/4" 10: 1-1/4"
4	Pressure adjusting range B: 5~70 bar C: 10~140 bar H: 35~230 bar

Specifications

Model	Max. Operating Pressure (bar)	Pressure Adj. Range (bar)	Max. Flow (lpm)	Weight (kg)
BUCG-03	250	B: 5~70	90	8.5
BUCG-06		C: 10~140	200	12.5
BUCG-10		H: 35~230	400	19.5

Dimensions

Unit: mm

BUCG-03

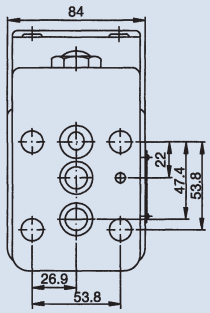

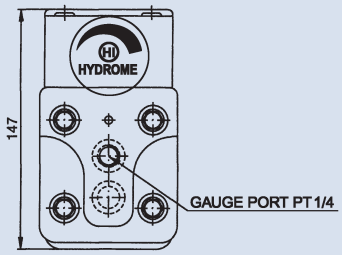

BUCG-06

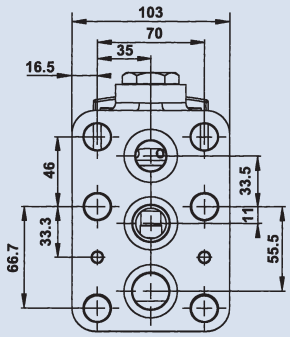

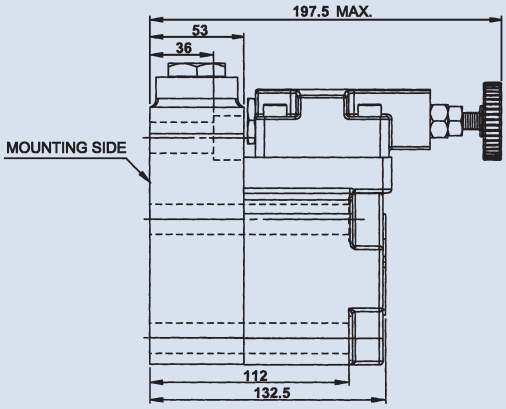

PRESSURE REDUCING VALVE

FEATURES:

- Pressure reducing valve is used in a branch of circuitry where a constant reduced pressure than the main relief setting is required. It can also be remote controlled by connecting form its remote control port(RC).
- Pressure reducing valve when combined with a built-in check valve, the free reverse flow can be accomplished. Pressure reducing valve without built-in check valve can be used in P line of a circuit. With a built-in check valve, it can be used in either A or B line of an actuator.

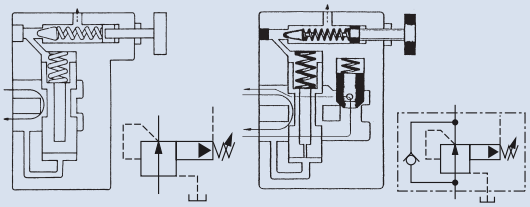

A

How to order

RC G - 03 - B

1 2 3 4

1	Model R: Pressure reducing valve RC: Pressure reducing with check valve
2	Mounting type G: Sub-plate mounting T: Thread connection
3	Valve size 03: 3/8" 06: 3/4" 10: 1-1/4"
4	Pressure adjusting range B: 5~70 bar C: 10~140 bar H: 35~230 bar

Specifications

Model		Max. Operating Pressure (bar)	Pressure Adj. Range (bar)	Max. Flow (lpm)	Weight (kg)		Bolt Size
Sub-Plate Mounting	Thread Connection				RG, RCG	RT, RCT	RG, RCG
RG-03 / RCG-03	RT-03,04 / RCT-03,04	250	B: 5~70	50	4.6 / 5.5	4.2 / 4.5	M10 x 55L x 4pcs M10 x 70L x 4pcs
RG-06 / RCG-06	RT-06 / RCT-06		C: 10~140	125	7.2 / 8.2	7.4 / 7.8	M10 x 55L x 4pcs M10 x 80L x 4pcs
RG-10 / RCG-10	RT-10 / RCT-10		H: 35~230	250	12 / 14.8	12 / 16.4	M10 x 55L x 6pcs M10 x 95L x 6pcs

Performance curves

Unit: mm

RG-03, RCG-03, RT-03, RCT-03

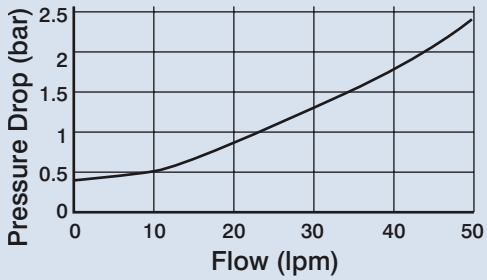

RG-10, RCG-10, RT-10, RCT-10

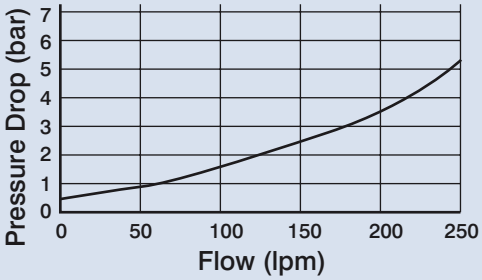

RG-06, RCG-06, RT-06, RCT-06

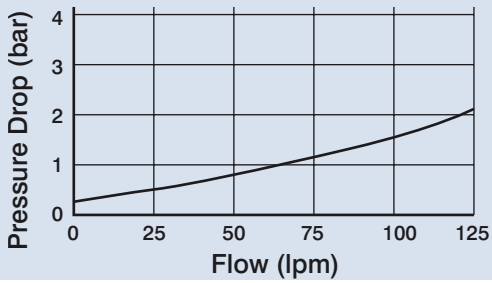

PRESSURE REDUCING VALVE

A

Dimensions

RT-03, 06, 10

Unit: mm

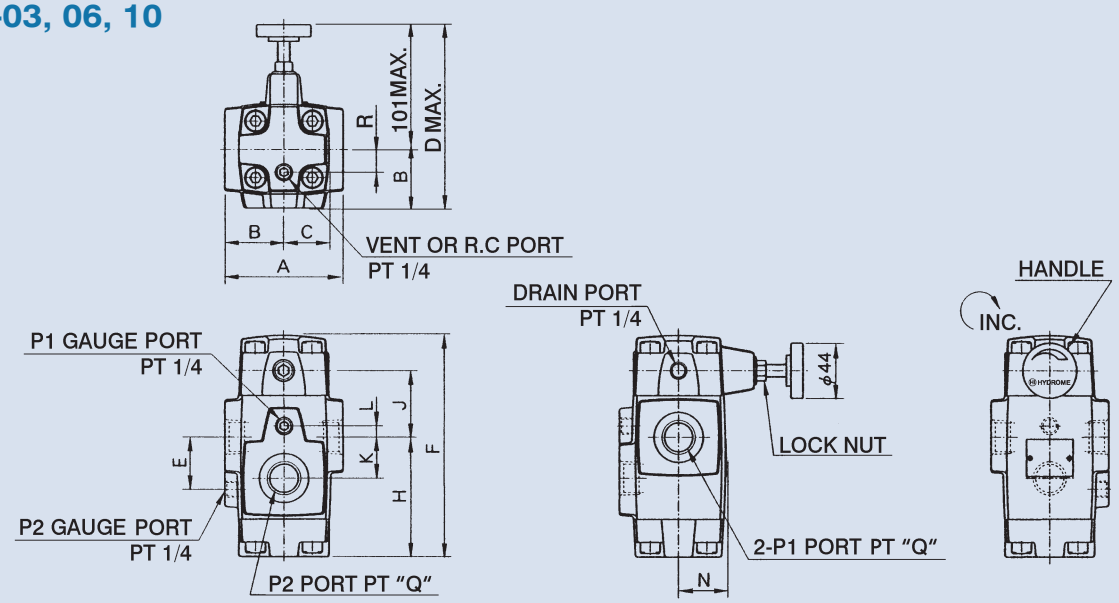

Model	A	B	C	D	E	F	H	J	K	L	N	Q	R
RT-03	82	41	33	148	28	155	85	48	28		32	3/8	10
RT-06	96	48	36.5	149	42	179	97.5	53.5	33	9	39	3/4	18.5
RT-10	132	66	43	167	52	216	124	64	40	12	46	1-1/4	18.5

RCT-03, 06, 10

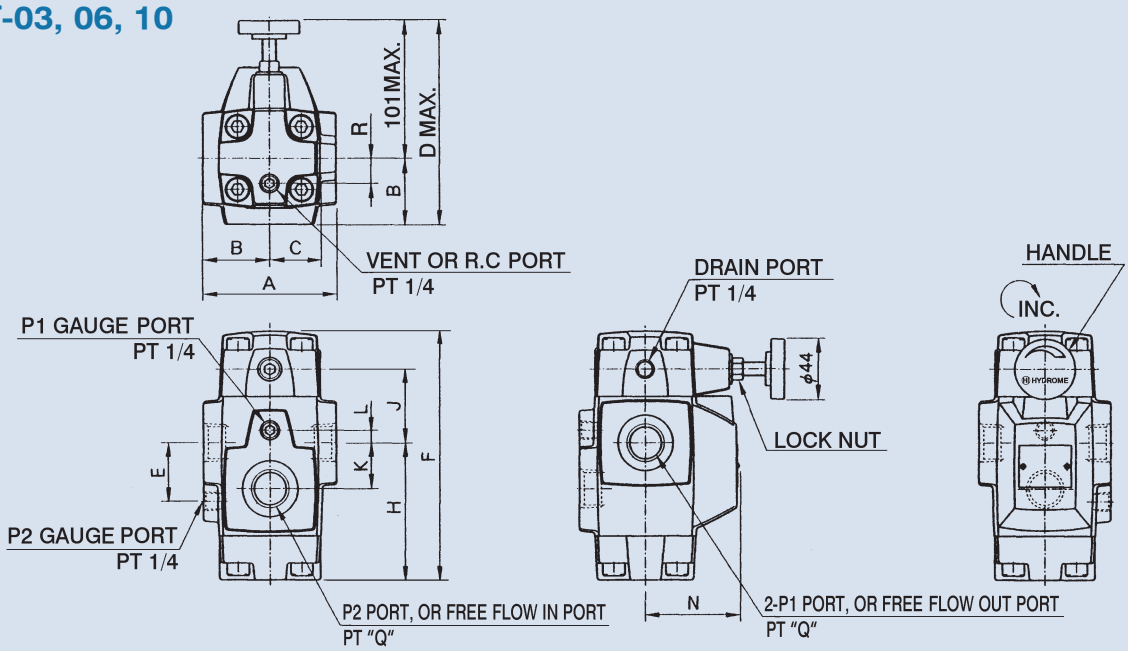

Model	A	B	C	D	E	F	H	J	K	L	N	Q	R
RCT-03	82	41	30	148	28	155	85	48	28		55	3/8	10
RCT-06	96	48	36.5	149	42	179	97.5	53.5	33	9	68	3/4	18.5
RCT-10	132	66	43	167	52	216	124	64	40	12	86	1-1/4	18.5

PRESSURE REDUCING VALVE

Dimensions

RG-03, 06

Unit: mm

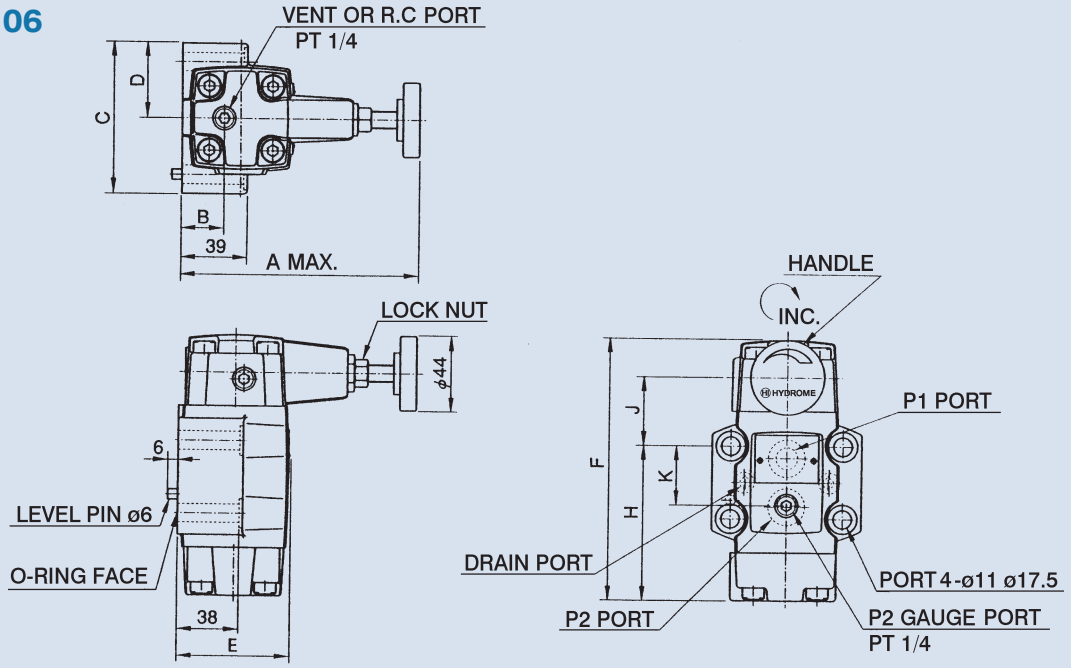

Model	A	B	C	D	E	F	H	J	K
RG-03	142	25	89	44.5	67	155.5	92.4	40.6	34.9
RG-06	141	21.5	102	51	79	179	111	40	48

RG-10

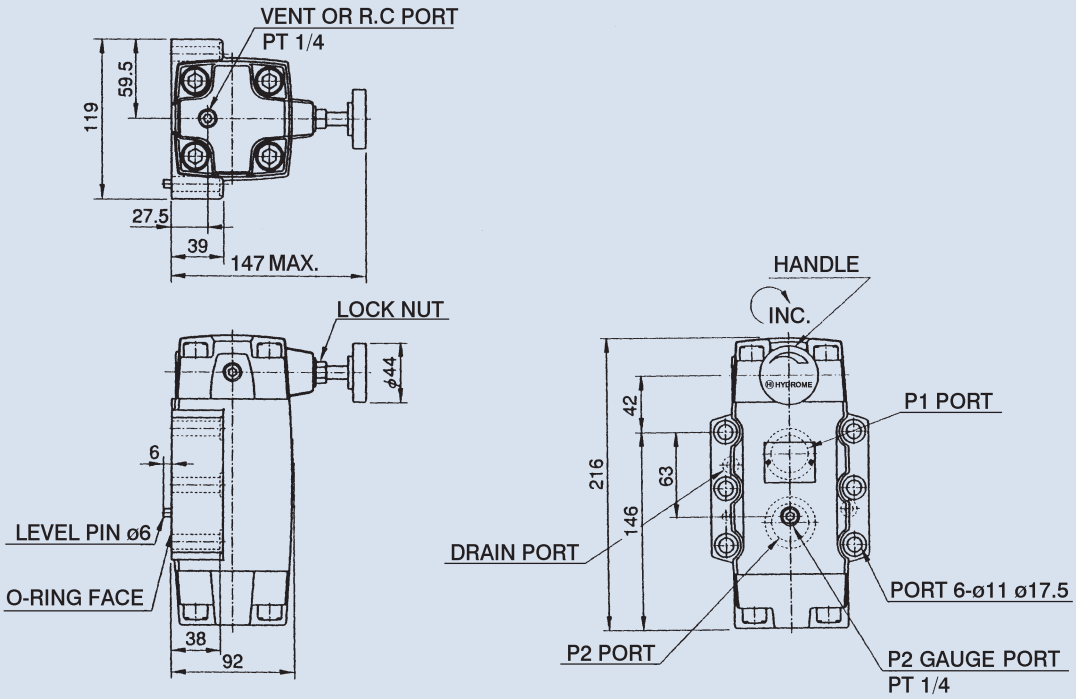

A

PRESSURE REDUCING VALVE

A

Dimensions

RCG-03, 06

Unit: mm

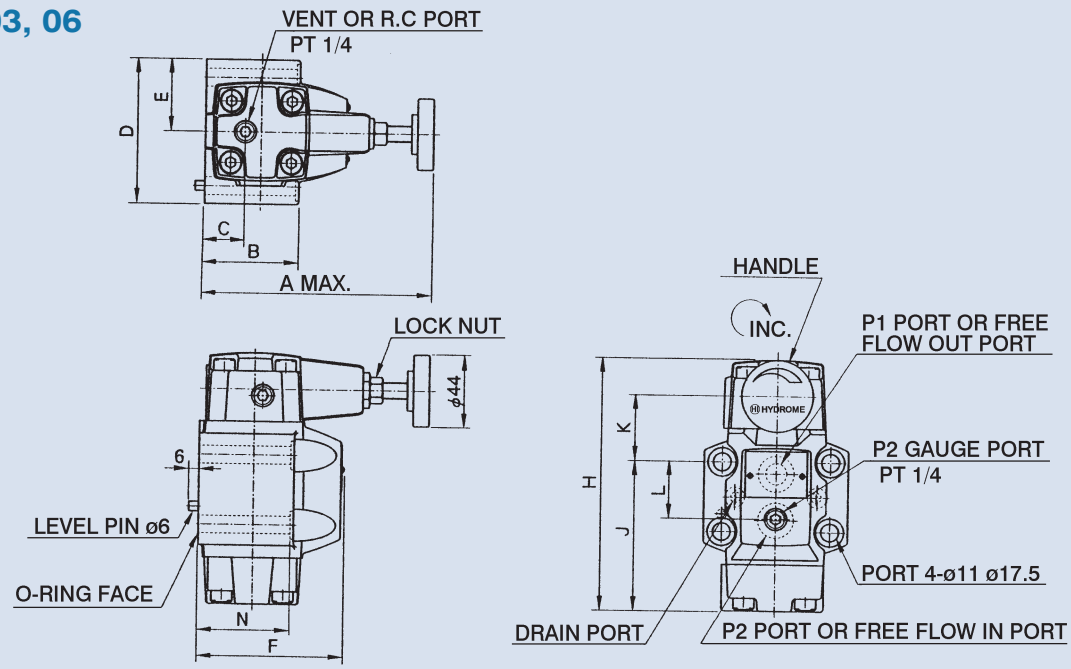

Model	A	B	C	D	E	F	H	J	K	L	N
RCG-03	142	59	25	89	44.5	90	155	92.4	40.6	34.9	58
RCG-06	141	69	21.5	102	51	108	179	111	40	48	68

RCG-10

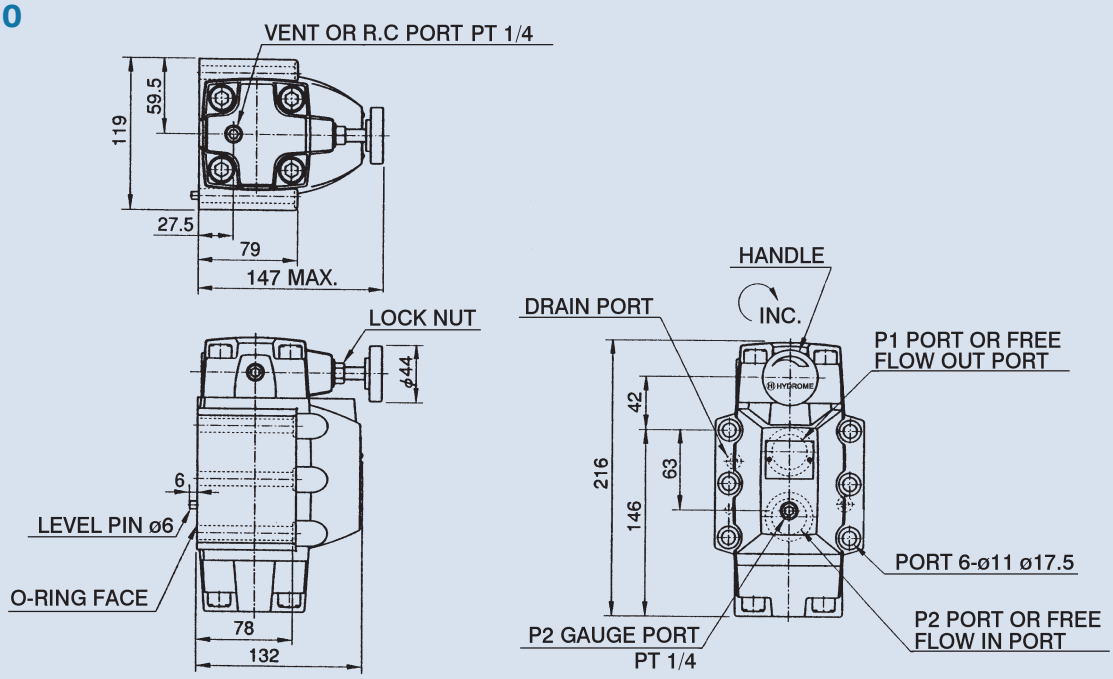

SEQUENCE VALVE AND COUNTERBALANCE VALVE

FEATURES:

- HG series is the direct acting type pressure control valve which uses either internal or external pilot pressure to make the valve operate. By the different way of assembly, the valve can be functioned as low pressure relief valve, sequence valve, or unloading valve.
- HCG series valve is HG valve with a check valve built-in, so that free revers flow can be accomplished. The valve can then be served as sequence valve or counterbalance valve. HCG valve can use either internal pilot, or external pilot. When it is used as sequence valve, it should be externally drained; and if used as counterbalance valve, it should be internally drained.
- Remarks: NPT ports for HCT series can be made by special order.

A

How to order

H C G - 03 - B - 4

1 2 3 4 5 6

1	Model
2	C: With check
3	Mounting type G: Sub-plate mounting T: Thread connection
4	Valve size
5	Pressure adjusting range
6	Valve type

Specifications

Model		Pressure Adj. Range (bar)	Max. Flow (lpm)	Weight (kg)	
Sub-Plate Mounting	Thread Connection			HG, HCG	HT, HCT
HG-03 / HCG-03	HT-03 / HCT-03	A: 18~35 B: 35~70 C: 70~140 H: 140~210	60	4 / 5	3.7 / 4.1
HG-06 / HCG-06	HT-06 / HCT-06		130	6.1 / 7.4	6.2 / 7.1
HG-10 / HCG-10	HT-10 / HCT-10		250	11.0 / 13.8	12.0 / 13.8

Without check	The type of pilot, drain	Function drawing	Symbol
1.Low pressure relief	Internal pilot internal drain	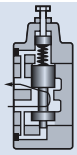	
2.Sequence valve	Internal pilot external drain	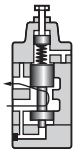	
3.Sequence valve	External pilot external drain	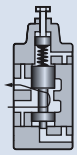	
4.Unloading relief	External pilot internal drain	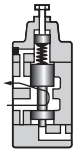	

With check	The type of pilot, drain	Function drawing	Symbol
1.Counter balance valve	Internal pilot internal drain	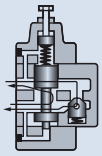	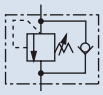
2.Sequence & check valve	Internal pilot external drain	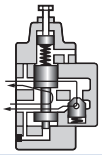	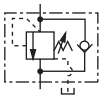
3.Sequence & check valve	External pilot external drain	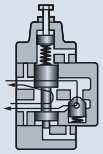	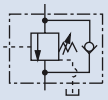
4.Counter balance valve	External pilot internal drain	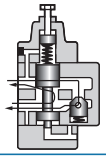	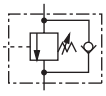

SEQUENCE VALVE AND COUNTERBALANCE VALVE

A

Dimensions

Unit: mm

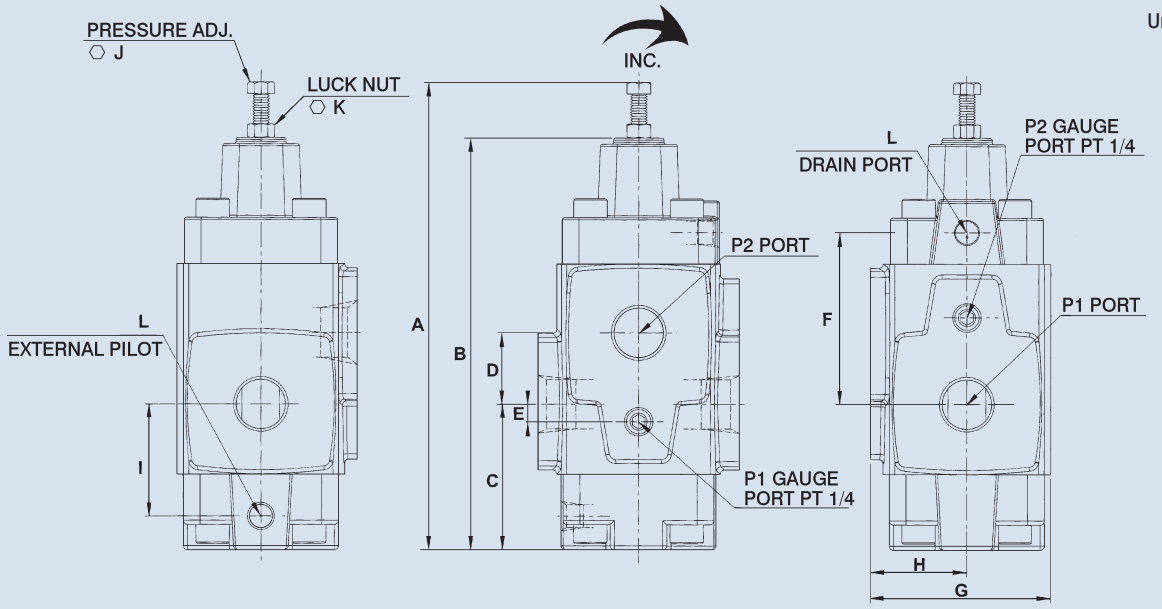

Model	A	B	C	D	E	F	G	H	I	J	K	L
HT-03	192	167.5	58	30	0	69	74	41.5	45	10	13	1/8
HT-06	223	196	69	34	8	82	86	46	53	10	13	1/4
HT-10	266	239	87	41	11	98	110	65	68	10	17	1/4

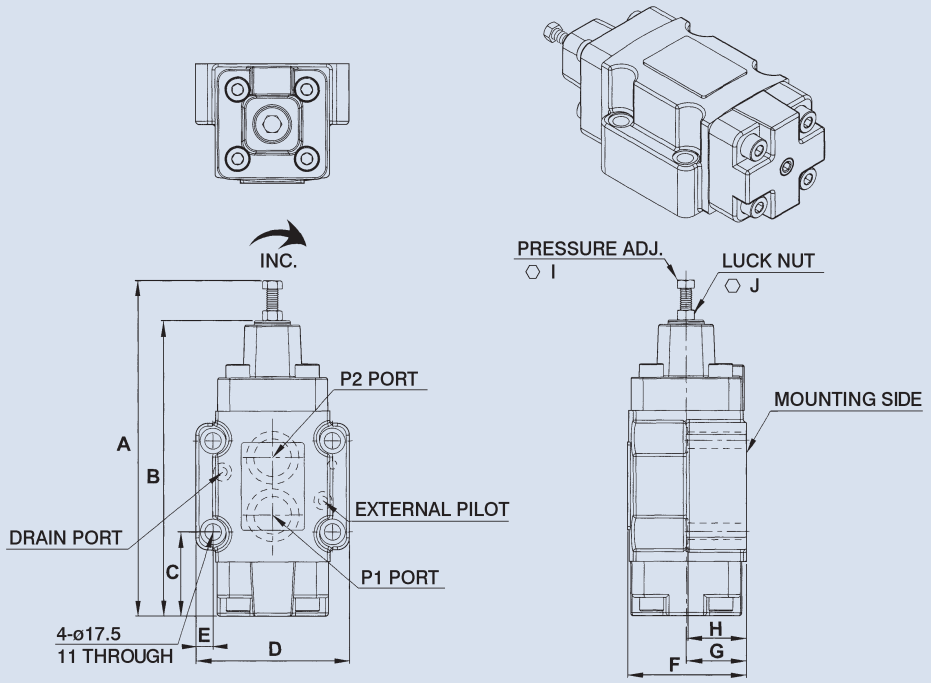

Model	A	B	C	D	E	F	G	H	I	J	Bolt size
HG-03	192	168	50.6	89	11.2	69	42	35	10	13	M10 x 50L x 4pcs
HG-06	223	196	60	102	11.3	79	46	39	10	13	M10 x 55L x 4pcs
HG-10	266	239	65	119	11	96	48.5	40	10	17	M10 x 60L x 6pcs

SEQUENCE VALVE AND COUNTERBALANCE VALVE

Dimensions

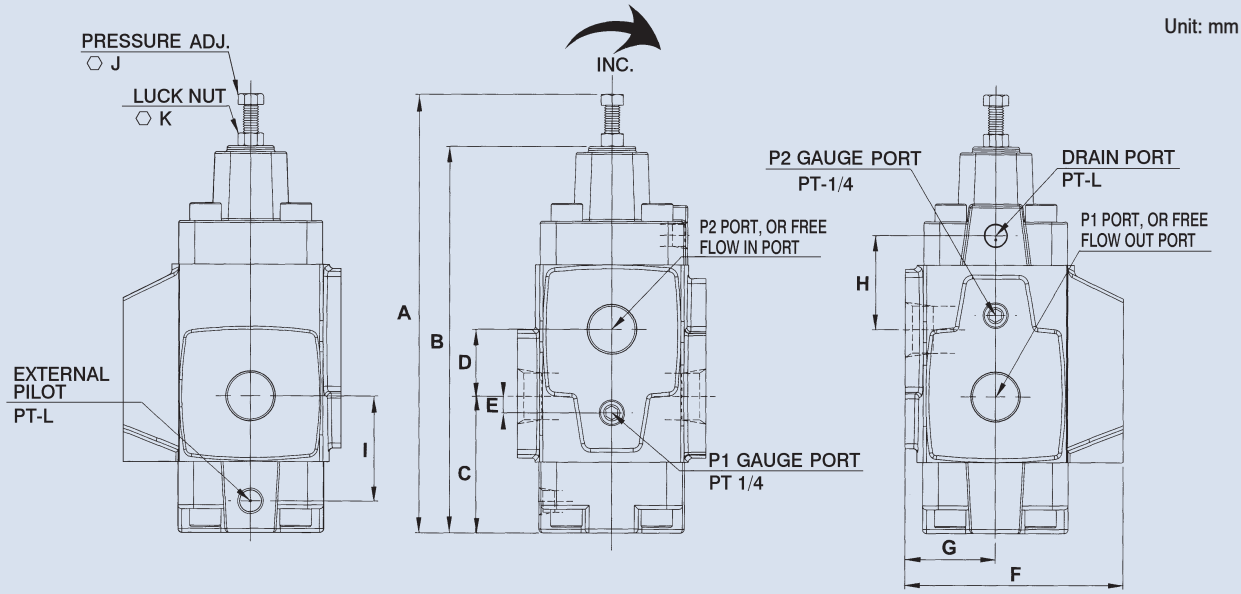

Model	A	B	C	D	E	F	G	H	I	J	K	L
HCT-03	195	170.5	59.5	28	0	95	41.5	39	45	10	13	1/8
HCT-06	213.5	189.5	66	34	8.3	111	46	46.5	53.5	10	13	1/4
HCT-10	267.5	237	87	40	15	154	64	59	68	10	17	1/4

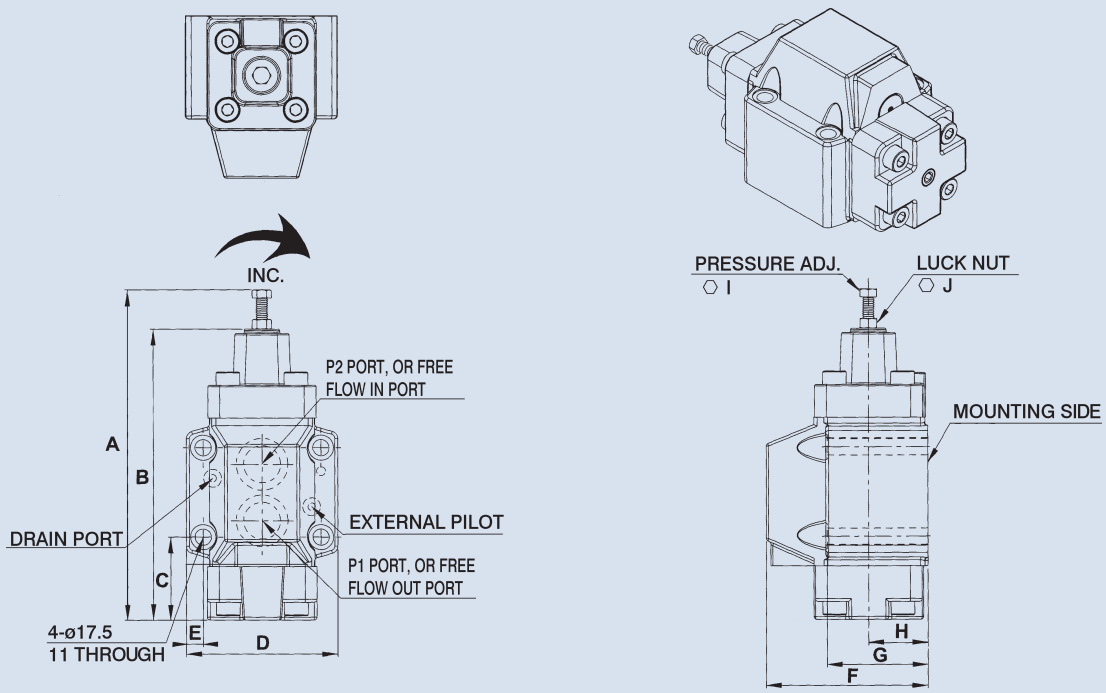

Model	A	B	C	D	E	F	G	H	I	J	Bolt size
HCG-03	192	167.5	50.6	89	11.2	90	58	35	10	13	M10 x 70L x 4pcs
HCG-06	222	196	60	102	11.3	109	68	40	10	13	M10 x 80L x 4pcs
HCG-10	266	239	65	119	11.5	131	80	48	10	17	M10 x 95L x 6pcs

SUBPLATE FOR VALVES BG, DB, SBG, BR, RCG, HCG, CPDG

A

Dimensions

Unit: mm

BGM, DBM, SBGM, BRM

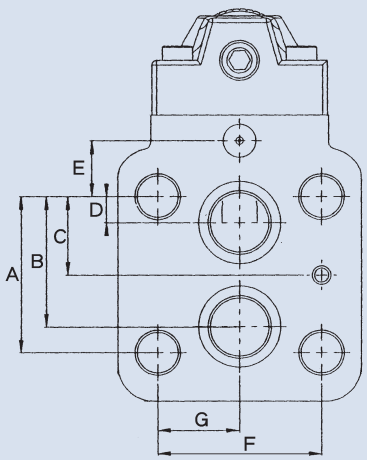

Port size	A	B	C	D	E	F	G
03	53.8	47.4	22	22	0	53.8	26.9
06	66.7	55.5	33.4	11	23.8	70	35
10	88.9	76.2	44.5	12.7	31.8	82.6	41.3

RGM-03, RCGM-03, HGM-03, HCGM-03, CPDGM-03

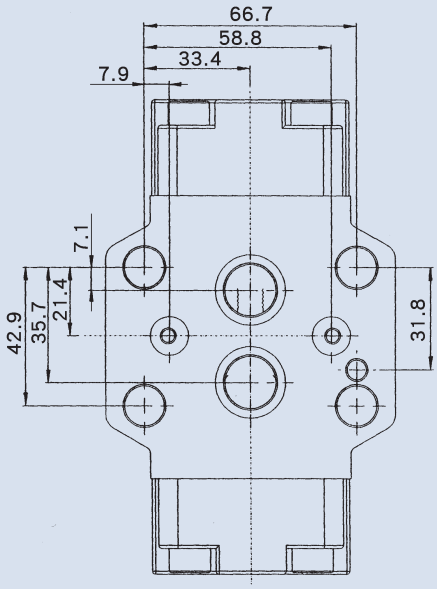

RGM-06, RCGM-06, HGM-06, HCGM-06, CPDGM-06

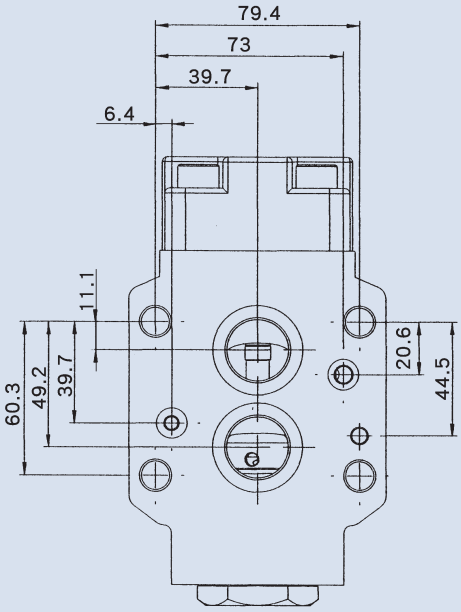

RGM-10, RCGM-10, HGM-10, HCGM-10, CPDGM-10

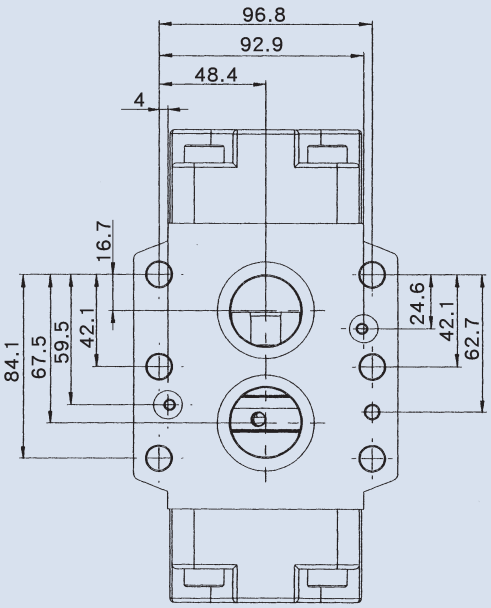

4ManPro
Mexico Branch Office
Elements For Manufacturing Processes

MEXICO BRANCH OFFICE
Roberto Diaz No. 401
Ciudad Industrial
Aguascalientes, Ags.
México
20290

4ManPro@4ManPro.com
(449) 171 3420
www.4ManPro.com/SPA/

USA BRANCH OFFICE
Pennzoil Place
700 Milam
Suite 1300
Houston, Tx, USA
77002

4ManPro-USA@4ManPro.com
+1 (832) 871 5022
www.4ManPro.com/ENG/

Elements For Manufacturing Processes

HI HYDROME