4ManPro

Elements For Manufacturing Processes

HI HYDROME

BLOQUES DE CONTROL

BASE PLATE FOR MODULAR VALVE

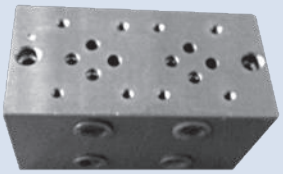

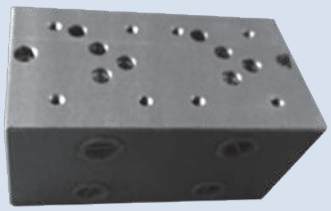

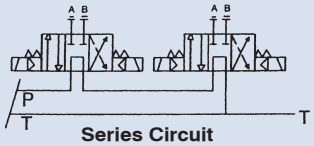

Series Circuit

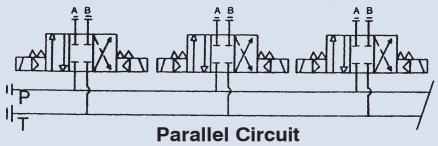

Parallel Circuit

How to order

MMC - 02 - 3W - 1 - 03 - P

1 2 3 4 5 6

1	Model	
2	Norminal valve size	02: Size 1/4" (ISO CETOP 3, NFPA D03, DIN NG 6) 03: Size 3/8" (ISO CETOP 5, NFPA D05, DIN NG 10) 04: Size 1/2" (ISO CETOP 7, NFPA D07, DIN NG 16) 06: Size 3/4" (ISO CETOP 8, NFPA D08, DIN NG 25)
3	Quantity of valve station	
4	Code of port thread	1: PT 2: NPT
5	Port size	For MMC-02 02: 1/4" 03: 3/8" (normal) For MMC-03 03: 3/8" 04: 1/2" (normal) For MMC-04 04: 1/2" 06: 3/4" For MMC-06 06: 3/4" 08: 1"
6	Hydraulic circuit	P: Parallel circuit (normal) S: Series circuit

Specifications

Model	Quantity Of Valve Station	Code Of Port Thread	Port Size	Tie Bolt	Dimensions			Weight (kg)
					L1	L2	L3	
MMC-02-2W	2	1	PT 3/8"	M5 x 0.8P	130	110	65	4.1
		2	NPT 3/8"	#10-24UNC				
MMC-02-3W	3	1	PT 3/8"	M5 x 0.8P	180	160	65	5.9
		2	NPT 3/8"	#10-24UNC				
MMC-02-4W	4	1	PT 3/8"	M5 x 0.8P	230	210	115	7.7
		2	NPT 3/8"	#10-24UNC				
MMC-02-5W	5	1	PT 3/8"	M5 x 0.8P	280	260	115	9.5
		2	NPT 3/8"	#10-24UNC				
MMC-02-6W	6	1	PT 3/8"	M5 x 0.8P	330	310	165	11.3
		2	NPT 3/8"	#10-24UNC				
MMC-03-2W	2	1	PT 1/2"	M6 x 1P	170	156	85	7.3
		2	NPT 1/2"	1/4-20UNC				
MMC-03-3W	3	1	PT 1/2"	M6 x 1P	245	231	85	11
		2	NPT 1/2"	1/4-20UNC				
MMC-03-4W	4	1	PT 1/2"	M6 x 1P	320	306	160	14.7
		2	NPT 1/2"	1/4-20UNC				
MMC-03-5W	5	1	PT 1/2"	M6 x 1P	395	381	160	18.4
		2	NPT 1/2"	1/4-20UNC				
MMC-03-6W	6	1	PT 1/2"	M6 x 1P	470	456	235	22.1
		2	NPT 1/2"	1/4-20UNC				

BASE PLATE FOR MODULAR VALVE

Dimensions

Unit: mm

MMC-02-1W

Weight: 2.3 kgs

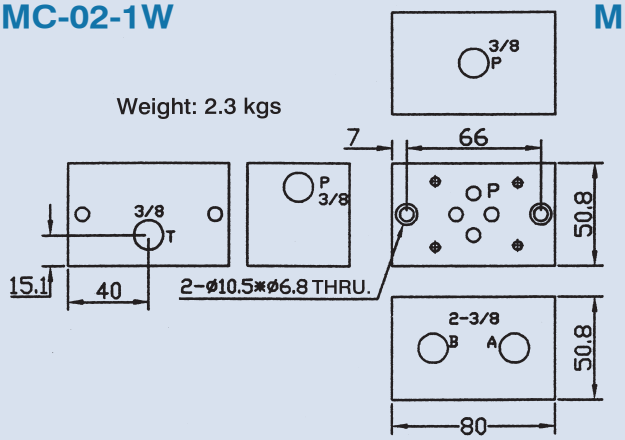

MMC-03-1W

Weight: 3.6 kgs

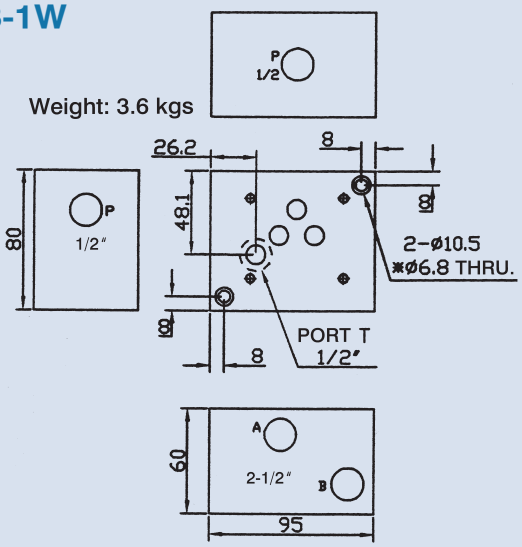

MMC-02-6W

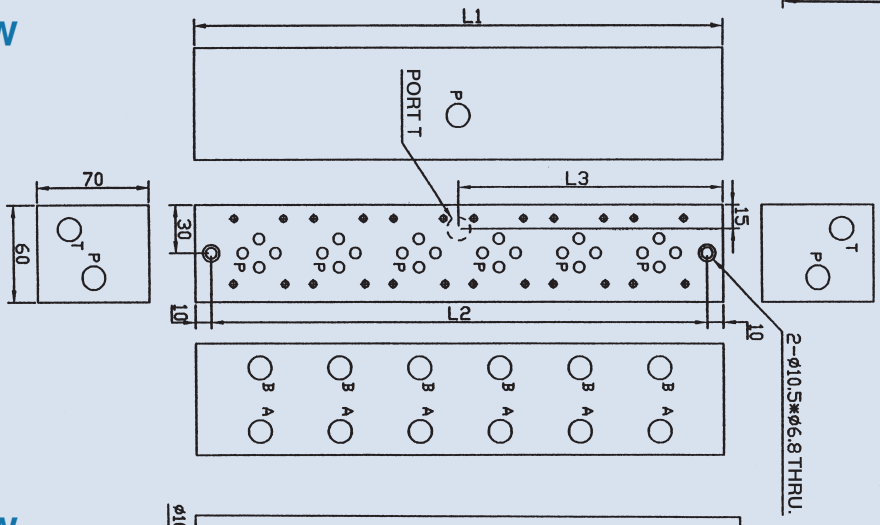

MMC-03-5W

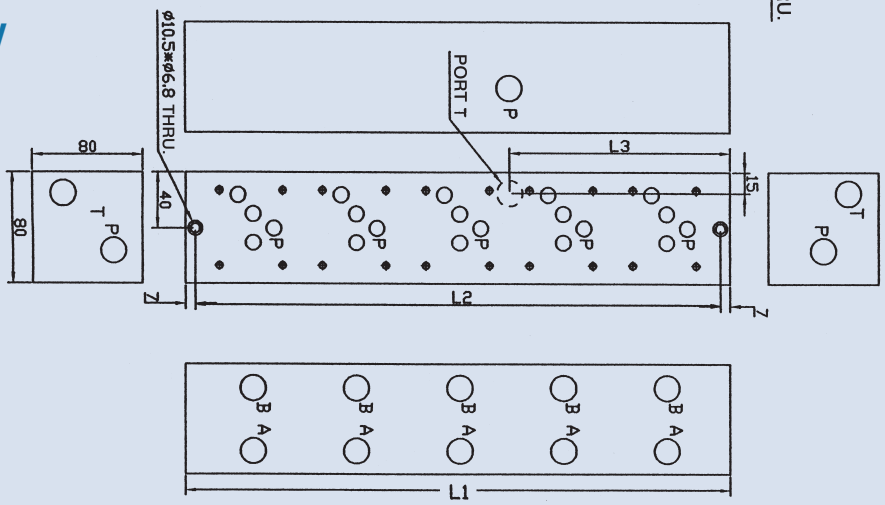

MANIFOLD FOR CARTRIDGE VALVE

Specifications

Ordering Code	Ports	Weight kg (lbs)
CS08-2N-3G-A	G 1/4	0.2
CS08-2N-3G-B	G 3/8	(0.44)
CS10-2N-3G-A	G 1/2	0.37
CS10-2N-3G-B	G 3/8	(0.82)
CS12-2N-3G-A	G 1/2	0.66
CS12-2N-3G-B	G 3/4	(1.46)

Cavity CS08-2N / CS10-2N / CS12-2N

Piping Threads

1P: PT 2N: NPT 3G: PF (G) 4A: SAE 5B: BSP

Max. Pressure 3600 psi (250 bar)

Features

Note: The maximum allowable pressure for the standard aluminum-alloy bodies is 250 bar; we also supply the ductile iron and steel bodies for higher pressure need.

Dimensions

Unit: mm (inch)

CS08-2N

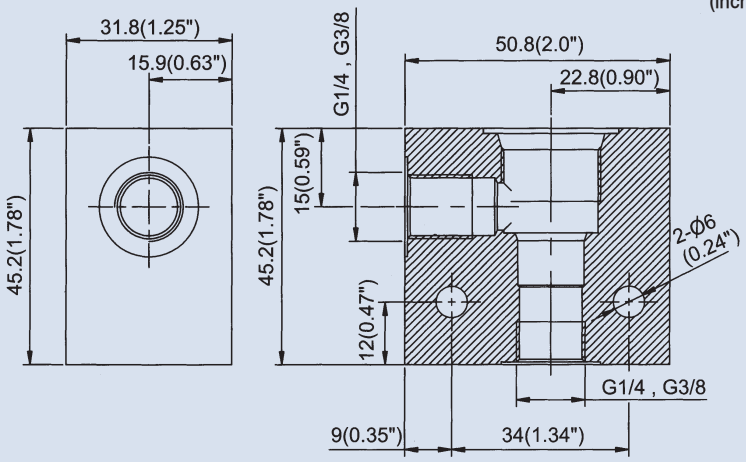

CS10-2N

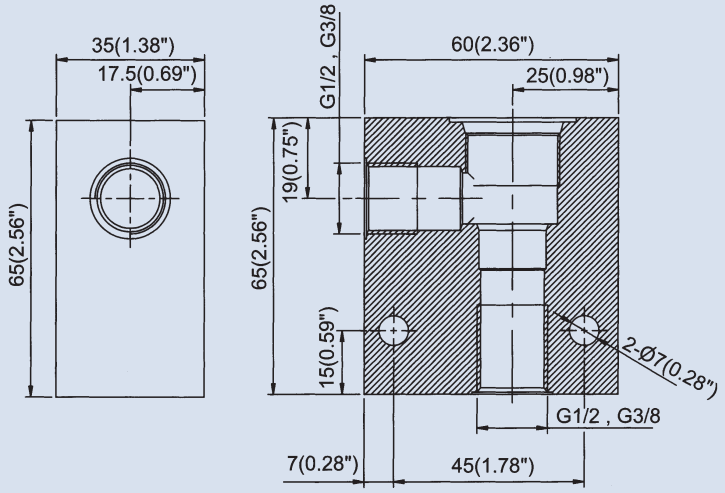

CS12-2N

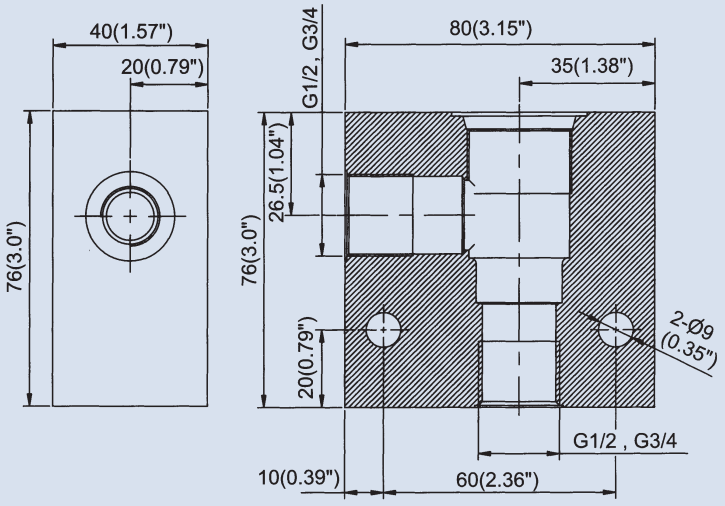

MANIFOLD FOR CARTRIDGE VALVE

F

Specifications

Ordering Code	Ports	Weight kg (lbs)
CS16-2N-3G-A	G 3/4	0.86
CS16-2N-3G-B	G 1	(1.90)
CS20-2N-3G-A	G 1-1/4	1.56
CS20-2N-3G-B	G 1	(3.44)
CS42-2N-3G-A	G 1-1/4	2.10 (4.63)

Cavity CS16-2N / CS20-2N / CS42-2N

Piping Threads

1P: PT 2N: NPT 3G: PF (G) 4A: SAE 5B: BSP

Max. Pressure 3600 psi (250 bar)

Features

Note: The maximum allowable pressure for the standard aluminum-alloy bodies is 250 bar; we also supply the ductile iron and steel bodies for higher pressure need.

Dimensions

CS16-2N

Unit: mm (inch)

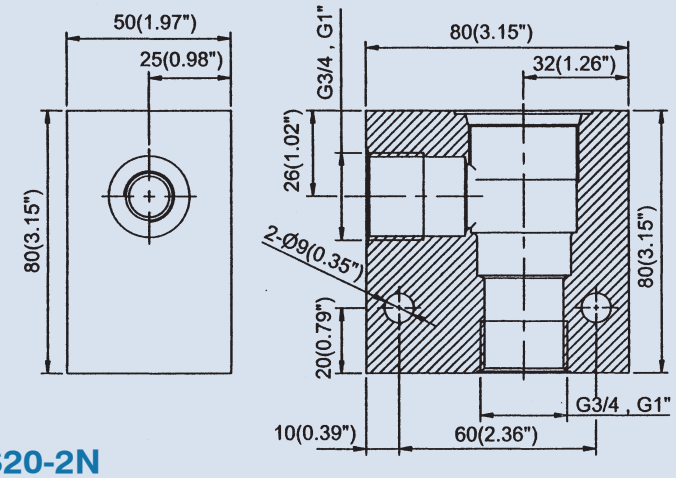

CS20-2N

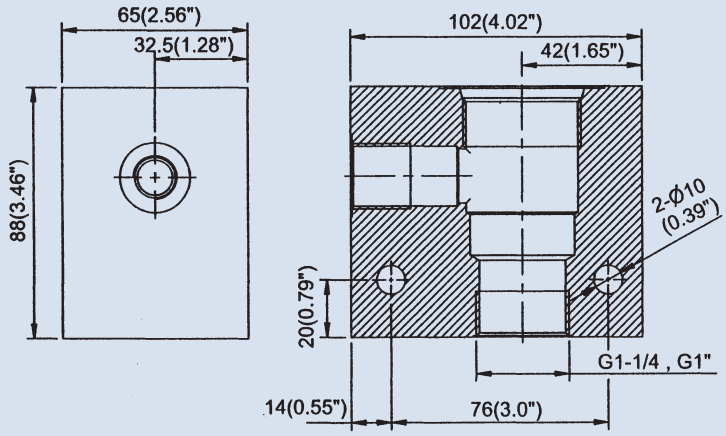

CS42-2N

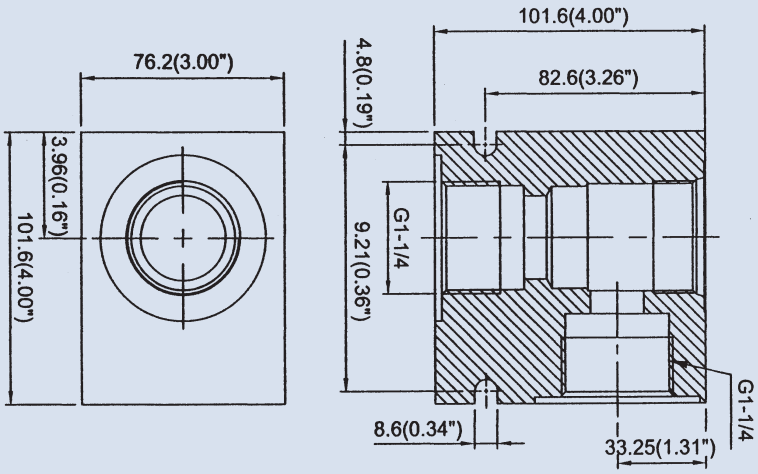

MANIFOLD FOR CARTRIDGE VALVE

Specifications

Ordering Code	Ports	Weight kg (lbs)
CS08-3N-3G-A	G 3/8	0.35 (0.77)
CS10-3N-3G-A	G 3/8	0.40 (0.88)
CS12-3N-3G-A	G 1/2	0.81 (1.79)

Cavity CS08-3N / CS10-3N / CS12-3N

Piping Threads

1P: PT 2N: NPT 3G: PF (G) 4A: SAE 5B: BSP

Max. Pressure 3600 psi (250 bar)

Features

Note: The maximum allowable pressure for the standard aluminum-alloy bodies is 250 bar; we also supply the ductile iron and steel bodies for higher pressure need.

Dimensions

Unit: mm (inch)

CS08-3N

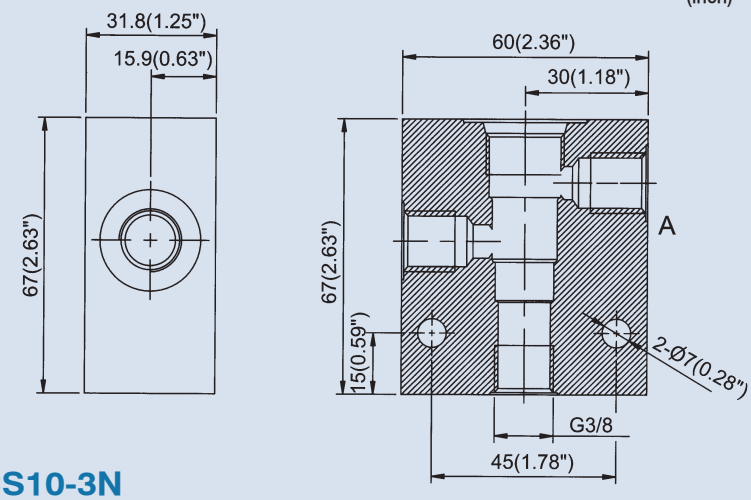

CS10-3N

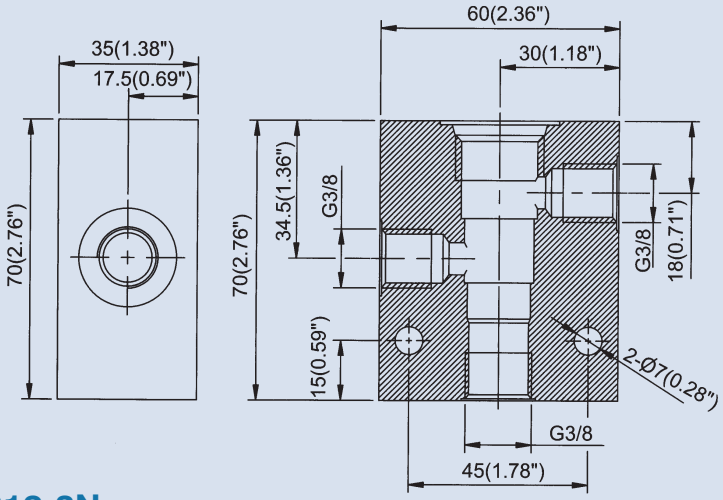

CS12-3N

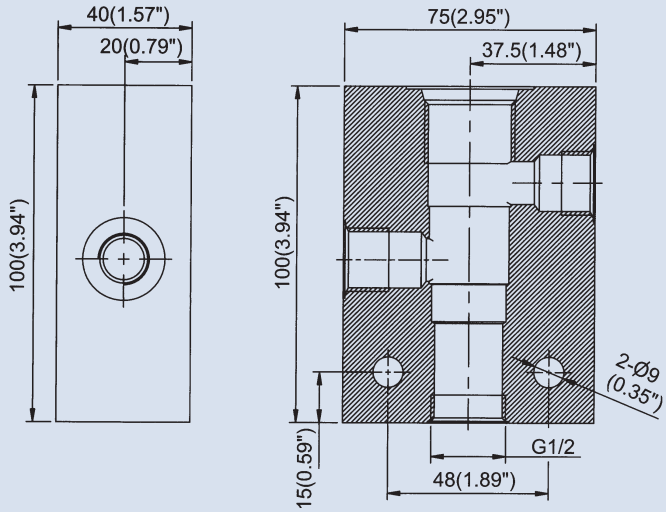

MANIFOLD FOR CARTRIDGE VALVE

F

Specifications

Ordering Code	Ports	Weight kg (lbs)
CS08-3S-3G-A	G 3/8	0.31 (0.68)
CS10-3S-3G-A	G 1/2	0.40 (0.88)
CS12-3S-3G-A	G 3/4	0.81 (1.79)

Cavity CS08-3S / CS10-3S / CS12-3S

Piping Threads

1P: PT 2N: NPT 3G: PF (G) 4A: SAE 5B: BSP

Max. Pressure 3600 psi (250 bar)

Features

Note: The maximum allowable pressure for the standard aluminum-alloy bodies is 250 bar; we also supply the ductile iron and steel bodies for higher pressure need.

Dimensions

Unit: mm (inch)

CS08-3S

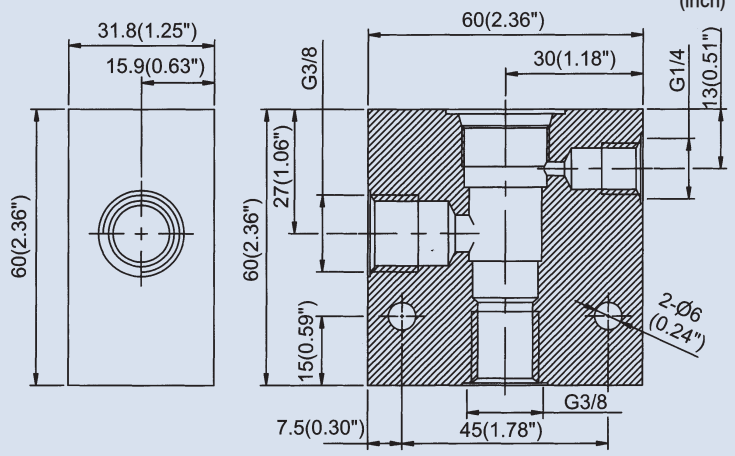

CS10-3S

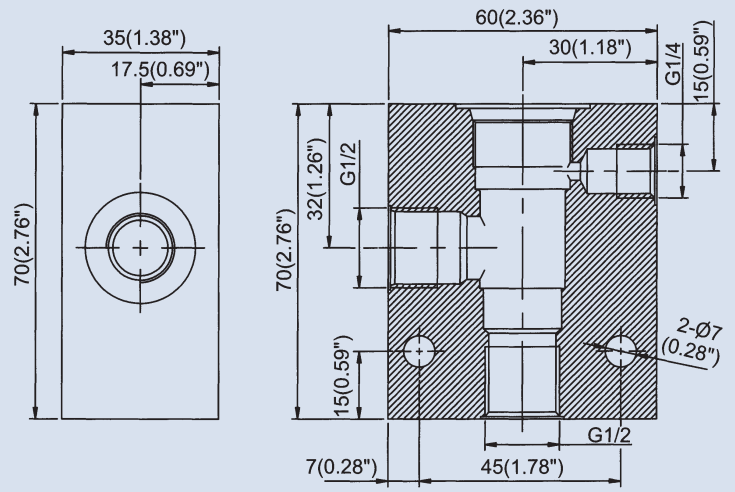

CS12-3S

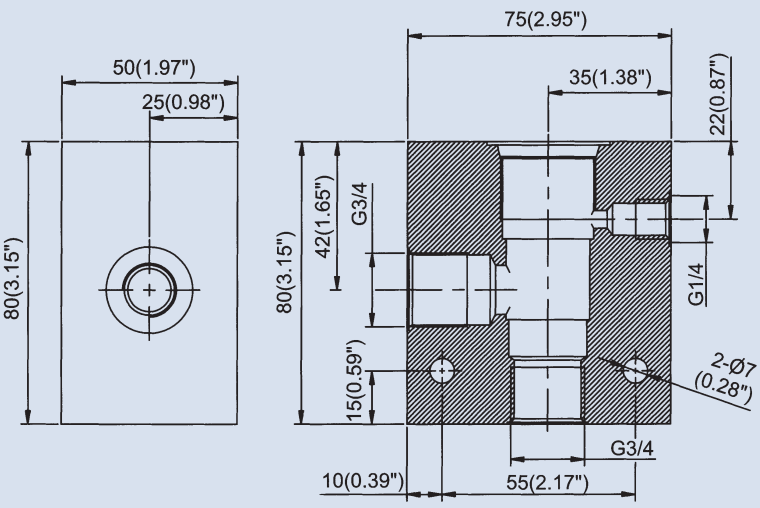

MANIFOLD FOR CARTRIDGE VALVE

Specifications

Ordering Code	Ports	Weight kg (lbs)
CS08-4N-3G-A	G 3/8	0.42 (0.93)
CS10-4N-3G-A	G 1/2	0.48 (1.06)
CS10-4N-3G-B	G 3/8	
CS12-4N-3G-A	G 3/4	1.78 (3.92)

Cavity CS08-4N / CS10-4N / CS12-4N

Piping Threads

1P: PT 2N: NPT 3G: PF (G) 4A: SAE 5B: BSP

Max. Pressure 3600 psi (250 bar)

Features

Note: The maximum allowable pressure for the standard aluminum-alloy bodies is 250 bar; we also supply the ductile iron and steel bodies for higher pressure need.

Dimensions

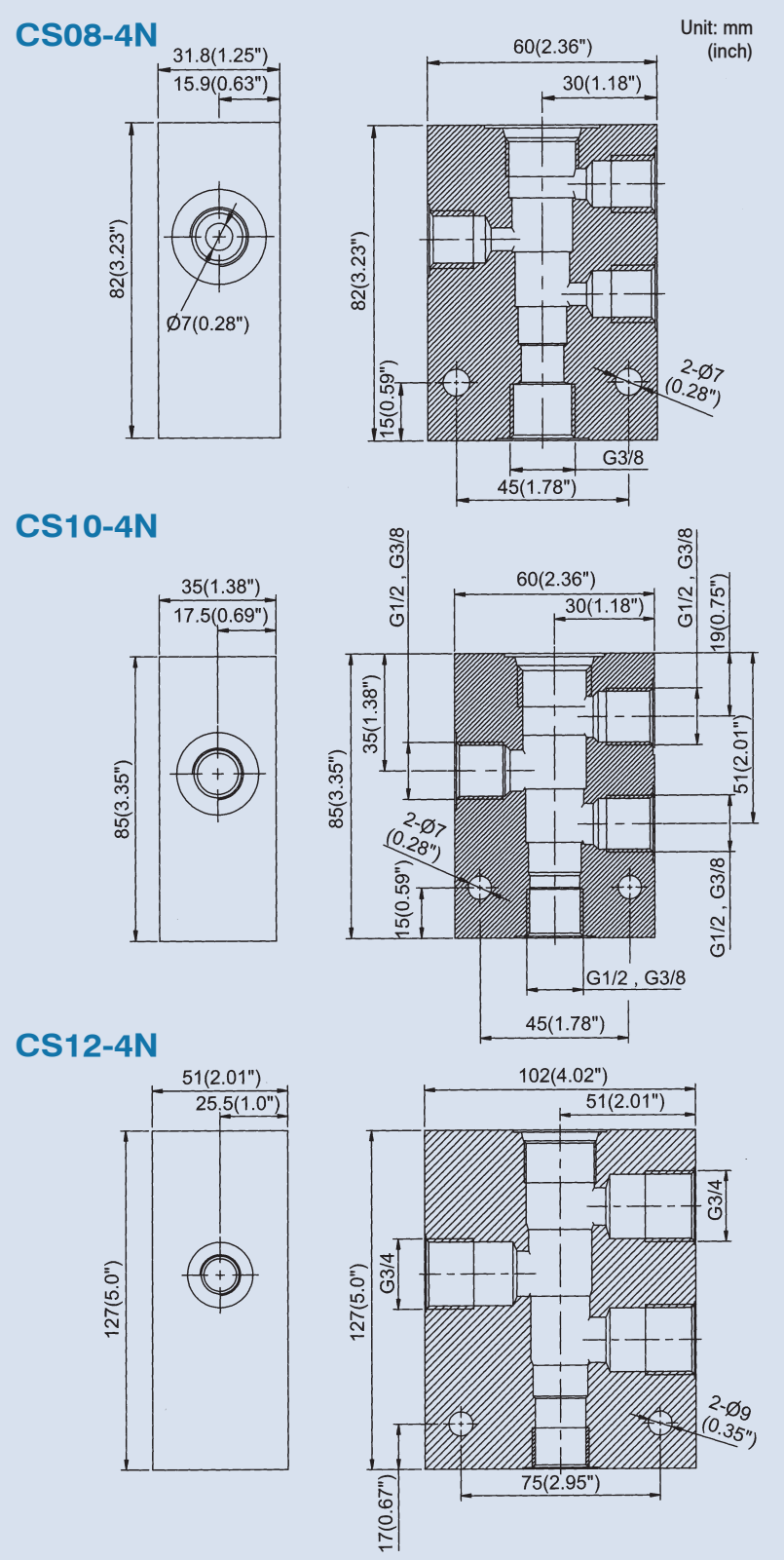

MANIFOLD FOR CARTRIDGE VALVE

F

Specifications

Ordering Code	Ports	Weight kg (lbs)
CST-2A-3G-A	G 3/8	0.65
CST-2A-3G-B	G 1/2	(1.43)
CST-3A-3G-A	G 3/8	0.40
CST-3A-3G-B	G 1/2	(0.88)
CST-3A-3G-C	G 3/4	
CST-5A-3G-A	G 3/8	0.35
CST-5A-3G-B	G 1/2	(0.77)

Cavity CST-2A / CST-3A / CST-5A

Piping Threads

1P: PT 2N: NPT 3G: PF (G) 4A: SAE 5B: BSP

Max. Pressure 3600 psi (250 bar)

Features

Note: The maximum allowable pressure for the standard aluminum-alloy bodies is 250 bar; we also supply the ductile iron and steel bodies for higher pressure need.

Dimensions

CST-2A

Unit: mm

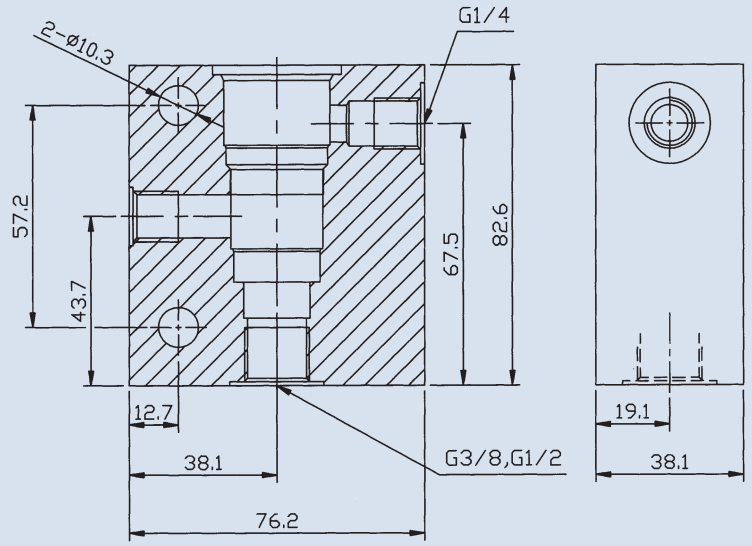

CST-3A

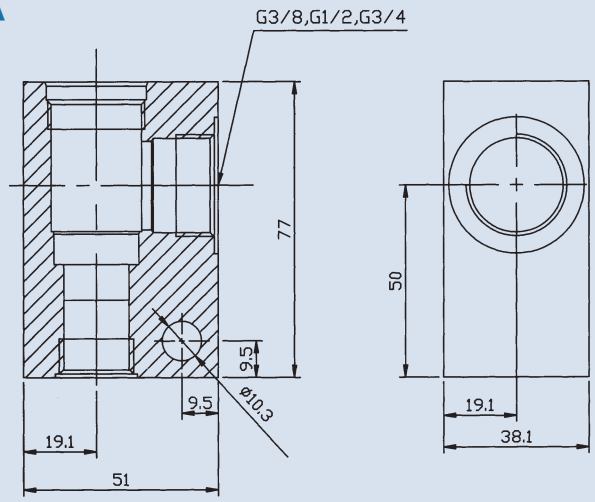

CST-5A

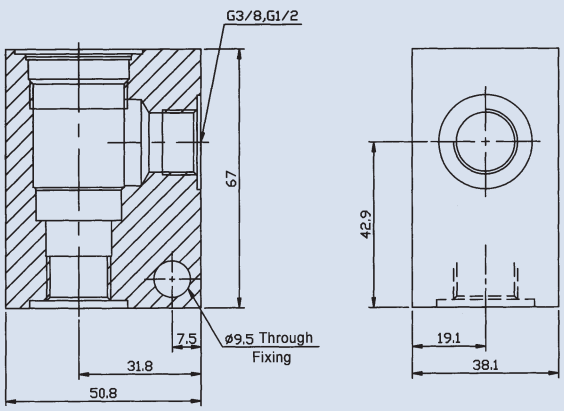

MANIFOLD FOR CARTRIDGE VALVE

Specifications

Ordering Code	Ports	Weight kg (lbs)
CST-10A-3G-A	G 3/8	0.27
CST-10A-3G-B	G 1/2	(0.60)
CST-11A-3G-A	G 1/4	0.50
CST-11A-3G-B	G 3/8	(1.10)
CST-13A-3G-A	G 1/4	0.23
CST-13A-3G-B	G 3/8	(0.51)

Cavity CST-10A / CST-11A / CST-13A

Piping Threads

1P: PT 2N: NPT 3G: PF (G) 4A: SAE 5B: BSP

Max. Pressure 3600 psi (250 bar)

Features

Note: The maximum allowable pressure for the standard aluminum-alloy bodies is 250 bar; we also supply the ductile iron and steel bodies for higher pressure need.

Dimensions

Unit: mm

CST-10A

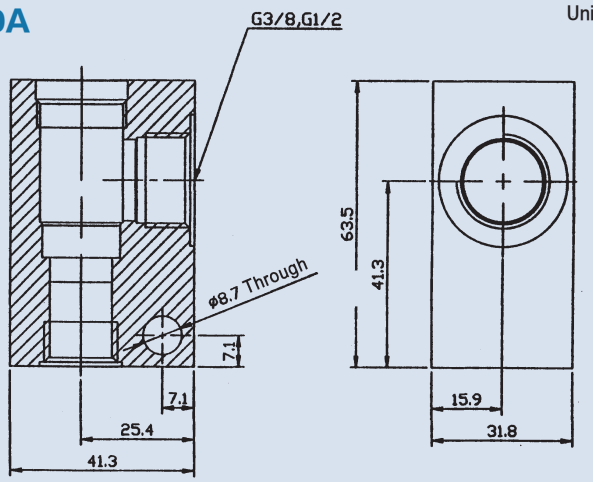

CST-11A

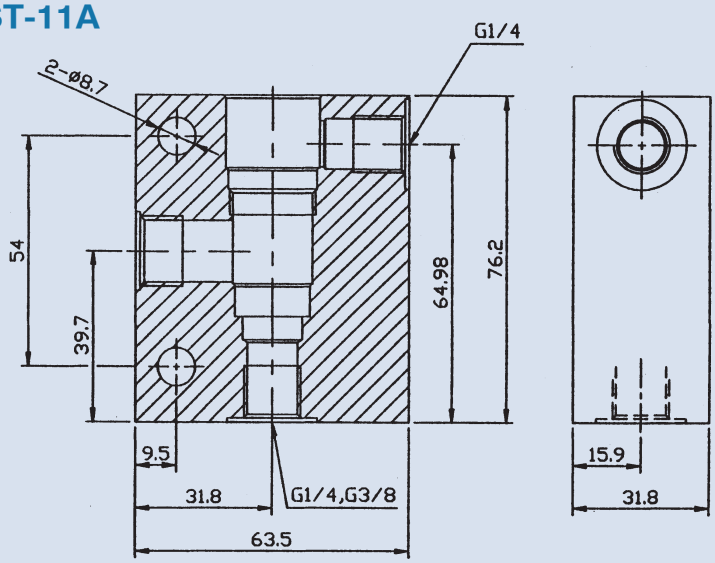

CST-13A

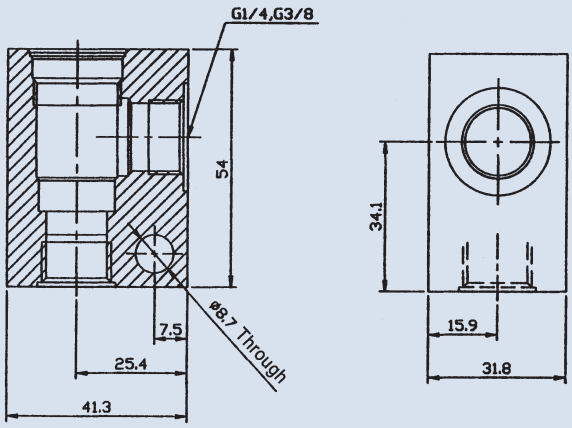

MANIFOLD FOR CARTRIDGE VALVE

F

Specifications

Ordering Code	Ports	Weight kg (lbs)
CST-16A-3G-A	G 3/4	1.21
CST-16A-3G-B	G 1	(2.67)
CST-17A-3G-A	G 3/4	1.69
CST-17A-3G-B	G 1	(3.73)
CST-18A-3G-A	G 1/4	2.83
CST-18A-3G-B	G 3/8	(6.24)

Cavity CST-16A / CST-17A / CST-18A

Piping Threads

1P: PT 2N: NPT 3G: PF (G) 4A: SAE 5B: BSP

Max. Pressure 3600 psi (250 bar)

Features

Note: The maximum allowable pressure for the standard aluminum-alloy bodies is 250 bar; we also supply the ductile iron and steel bodies for higher pressure need.

Dimensions

Unit: mm

CST-16A

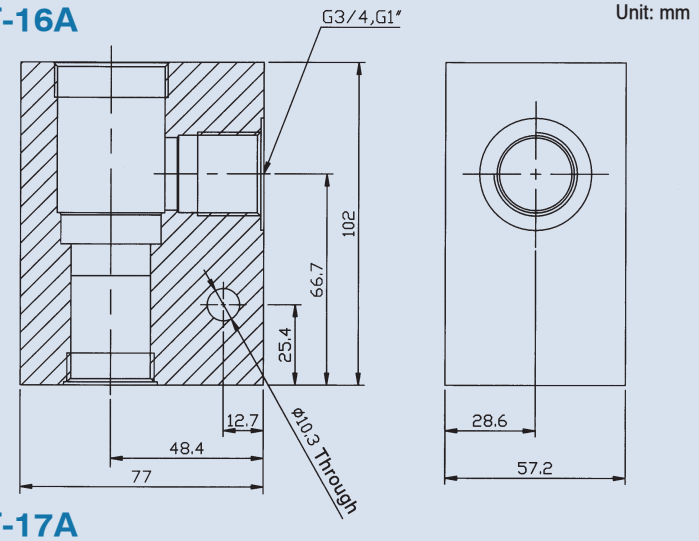

CST-17A

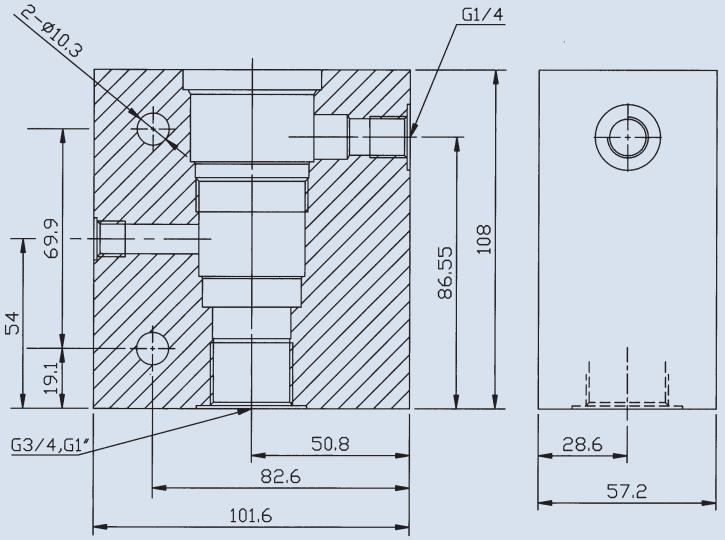

CST-18A

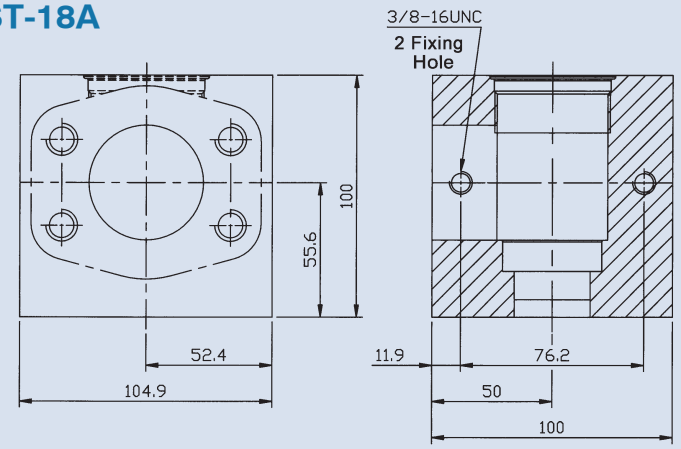

4ManPro
Mexico Branch Office
Elements For Manufacturing Processes

MEXICO BRANCH OFFICE
Roberto Diaz No. 401
Ciudad Industrial
Aguascalientes, Ags.
México
20290

4ManPro@4ManPro.com
(449) 171 3420
www.4ManPro.com/SPA/

USA BRANCH OFFICE
Pennzoil Place
700 Milam
Suite 1300
Houston, Tx, USA
77002

4ManPro-USA@4ManPro.com
+1 (832) 871 5022
www.4ManPro.com/ENG/

Elements For Manufacturing Processes

HI HYDROME