4ManPro

Elements For Manufacturing Processes

FULL CATALOG





SERIES		DESCRIPTION	PAGE
■	BS	SERVO SLIDES WITH HARDENED GUIDES AND BALL SCREW	1
■	BS-H	REINFORCED SERVO SLIDES WITH HARDENED GUIDES AND BALL SCREW	125
■	MULTI SPINDLE HEADS	MULTI-HEADS FOR TAPPING/DRILLING WITH 2 ~ 16 SPINDLE TIPS	168
■	CBB	SERVO CROSS TABLE WITH HARDENED LINEAR GUIDES AND BALL SCREW	249
■	CHH	CROSS TABLES WITH HYDRAULIC DISPLACEMENT	274
■	CHH-H	CROSS TABLES WITH HIGH PERFORMANCE HYDRAULIC DISPLACEMENT	308
■	CHS	HYDRAULIC CROSS TABLES WITH LEAD SCREW	327
■	CHS-H	HYDRAULIC CROSS TABLES WITH HIGH PERFORMANCE LEAD SCREW	361
■	CK	PLATFORM WITH ADJUSTABLE HORIZONTAL HEIGHT	380
■	CST	MANUAL CROSSED SLIDING TABLES	384
■	D51N	DOUBLE HEAD FOR TAPPING/DRILLING	405
■	EXT	HIGH SPEED CNC GEAR INDEXING TABLE	410
■	FMD	COMPACT SERVO SPINDLE FOR BORING/MILLING FLANGE TYPE	419
■	FMDC	COMPACT SERVO SPINDLE FOR BORING/MILLING FLANGE TYPE WITH TOOL CHANGE SYSTEM	423
■	FMDM	FACING COMPACT SERVO SPINDLE HEAD FLANGE TYPE	427
■	H-CNC	CNC SPINDLES	431
■	HCT	HYDRAULIC INDEXING TABLES	468
■	HF	SQUARE BOX SLIDE PROFILE	493
■	HFV	DOVETAIL SLIDE PROFILE	502
■	HS	HYDRAULIC DRIVE SLIDES	511
■	HS-H	HIGH PERFORMANCE HYDRAULIC DRIVE SLIDES	635
■	NXT	CNC INDEXING TABLES WITH HYDRAULIC COUPLING	678
■	RH	SERVO SLIDES WITH LINEAR GUIDES AND BALL SCREW	719
■	RHE	HIGH PERFORMANCE SERVO SLIDES WITH LINEAR GUIDES AND BALL SCREW	747
■	S	BORING/MILLING SPINDLES (WITH SQUARE HOUSING)	772
■	SC & SCS	BORING/MILLING SPINDLES WITH AUTOMATIC TOOL LOADING/UNLOADING TOOL SYSTEM	882
■	SD	DRILLING HEADS	911
■	SFHD	FLANGE TYPE HYDRAULIC DRILLING HEADS	980
■	SFSD	SERVO FLANGE TYPE DRILLING/TAPPING HEADS	1021
■	SFSDL	DRILLING/TAPPING SERVO SPINDLE HEAD FLANGE TYPE	1062
■	SFST	TAPPING SPINDLE HEAD FLANGE TYPE WITH LEAD SCREW TRANSMISSION	1071
■	SFSTL	SERVO TAPPING HEADS WITH LEAD SCREW DRIVE FLANGE TYPE	1092
■	SM	COMPACT BORING/MILLING SPINDLES WITH INTEGRATED SERVO MOTOR	1097
■	SR	BORING/MILLING SPINDLES (WITH ROUND HOUSING)	1116
■	SRR	HIGH PERFORMANCE BORING/MILLING HEADS	1157
■	SSD	SERVO FLANGE TYPE DRILLING/TAPPING HEADS	1202
■	SSFC	DRILLING/TAPPING HEADS WITH AUTOMATIC TOOL CHANGE SYSTEM	1258
■	SSFD	FLANGE TYPE DRILLING/TAPPING HEADS FLANGE TYPE	1263
■	SSFDL	TAPING/DRILLING HEADS FOR DRILLING/TAPPING WITH LINEAR RAIL, FLANGE TYPE	1268
■	SSFSD	SERVO FACING SPINDLE HEAD FLANGE TYPE	1276
■	S-SR	FACING SPINDLES HEADS	1293
■	ST	TAPPING HEADS	1350
■	ST & STD	MANUAL SLIDES WITH GRADUATED SCREW	1368
■	SWHI	CNC INDEXING TABLES WITH HYDRAULIC GEAR COUPLING	1408
■	TY	HYDRAULIC/PNEUMATIC INDEXING TABLES	1418
■	VAH	HIGH PERFORMANCE VERTICAL SLIDE	1428
■	VAP	VERTICAL SLIDE WITH PLATFORM	1444
■	VAS I	REINFORCED VERTICAL SLIDE WITH MASTER SCREW	1454
■	VAS II	VERTICAL SLIDE WITH ANGLE	1467
■	VCHH	HYDRAULIC VERTICAL CROSS TABLES WITH LEAD SCREW	1483
■	VCHS	MIXED VERTICAL CROSS TABLE WITH LEAD SCREW (MANUAL+HYDRAULIC)	1496
■	VCSS	MANUAL VERTICAL CROSS TABLE WITH LEAD SCREW	1509
■	VRB	SERVO VERTICAL SLIDE	1522
■	VSS	VERTICAL SLIDE WITH SERVO MOTOR	1526

4ManPro
Elements for Manufacturing Processes

BS SERIES

SERVO SLIDES WITH HARDENED GUIDES AND BALL SCREW

BS150-200/300

Servo Slides With Hardeness Guideways & Ball Screw

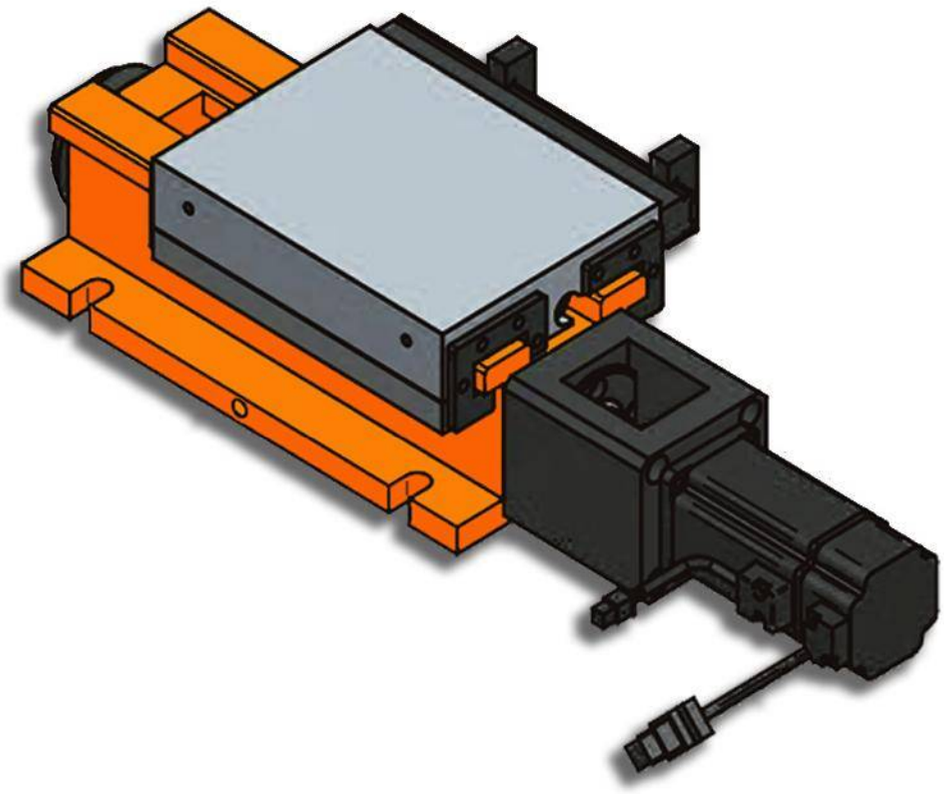

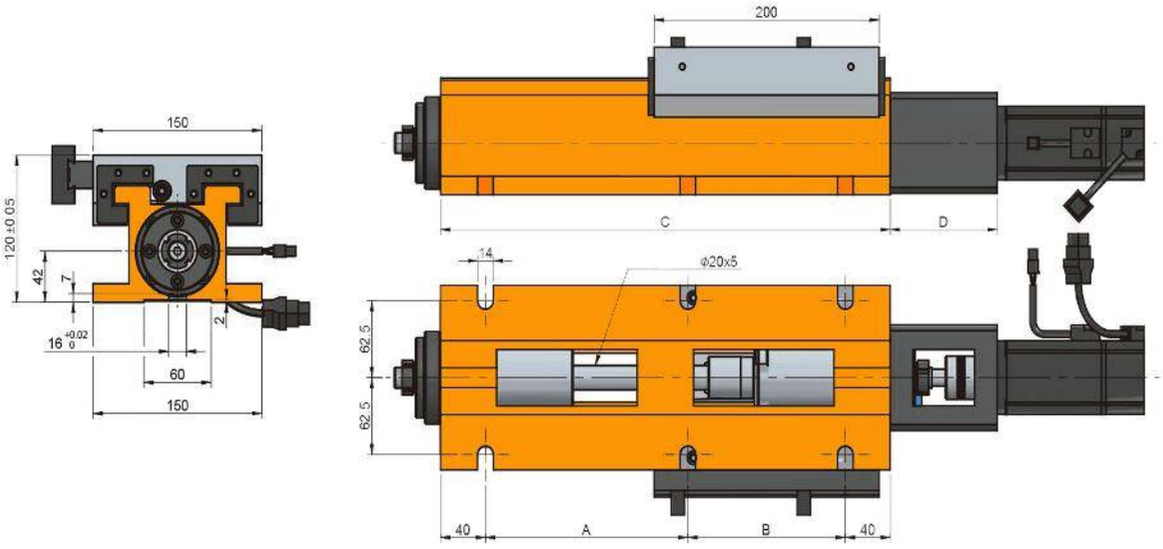
150
120 ±0.05
42
7
2
16 +0.02 0
60
150
200
C
D
14
ϕ20x5
62.5
62.5
40
A
B
40

Characteristics & Dimensions

MODEL	BS150-200/300
Profile Width	*150.00*
A	*220.00*
B	-
C	*300.00*
C1	-
C2	-
C3	-
C4	-
C5	-
D	*95.00*
Profile Lenght	-
Lead Screw Pace	-
Total Stroke	*80.00*
System Total Weight (Kg)	*37.00*

*** Roundness ≤ 0.003 mm.
**** All dimension are given in milimeters.

BS150-200/400

Servo Slides With Hardeness Guideways & Ball Screw

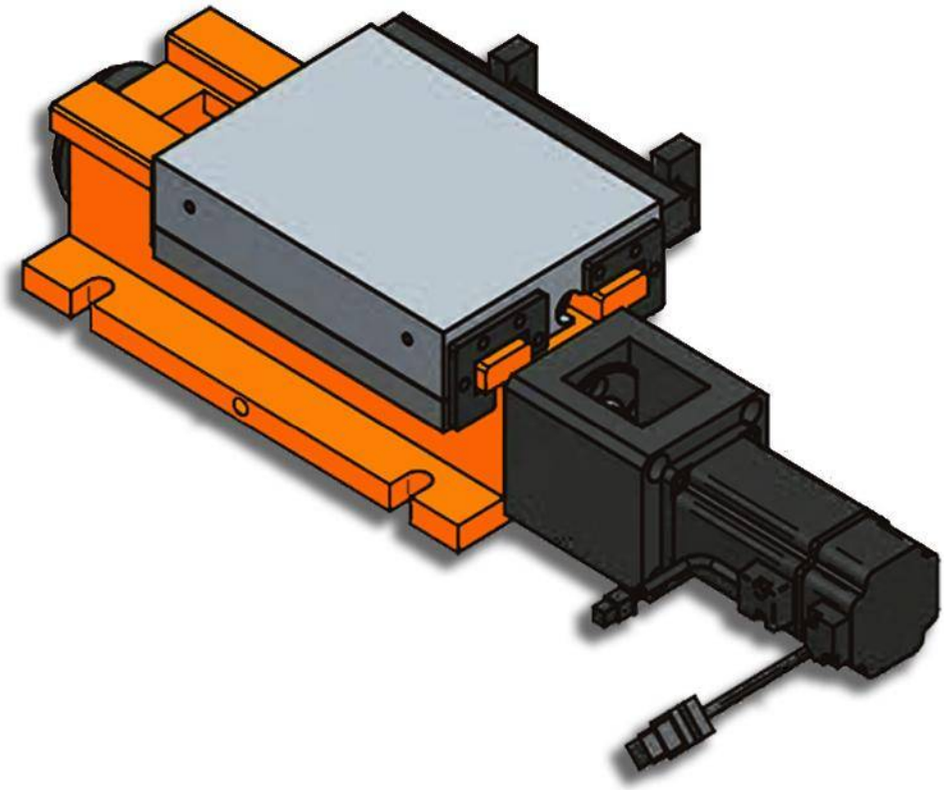

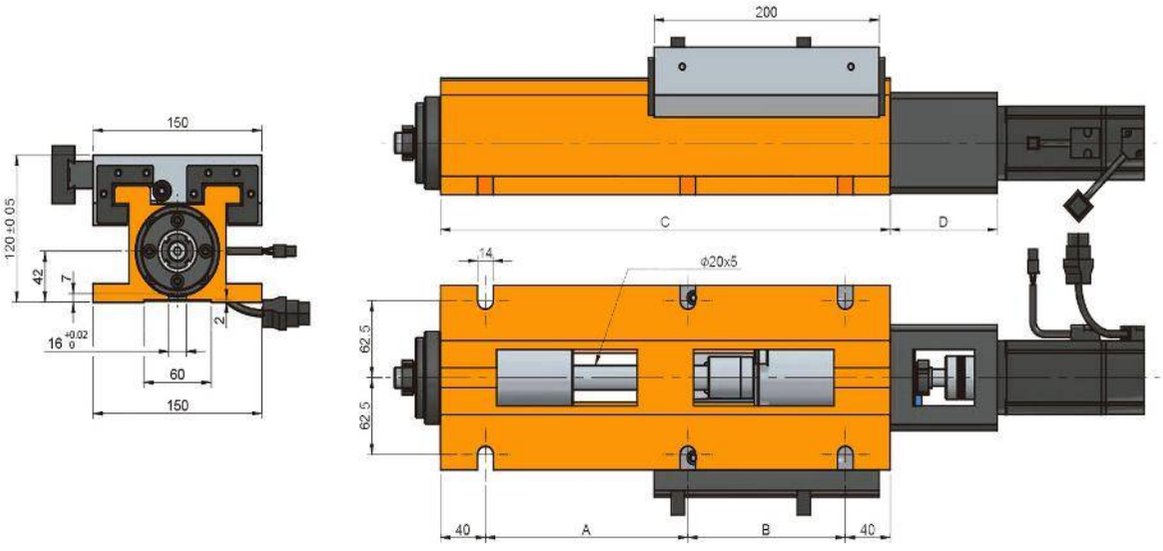
150
120±0.05
42
7
2
16 +0.02 0
60
150
200
C
D
14
ϕ20x5
62.5
62.5
40
A
B
40

Characteristics & Dimensions

MODEL	BS150-200/300
Profile Width	*150.00*
A	*220.00*
B	-
C	*300.00*
C1	-
C2	-
C3	-
C4	-
C5	-
D	*95.00*
Profile Lenght	-
Lead Screw Pace	-
Total Stroke	*80.00*
System Total Weight (Kg)	*37.00*

***** Roundness ≤ 0.003 mm.*
****** All dimension are given in milimeters.*

BS180-250/370

Servo Slides With Hardeness Guideways & Ball Screw

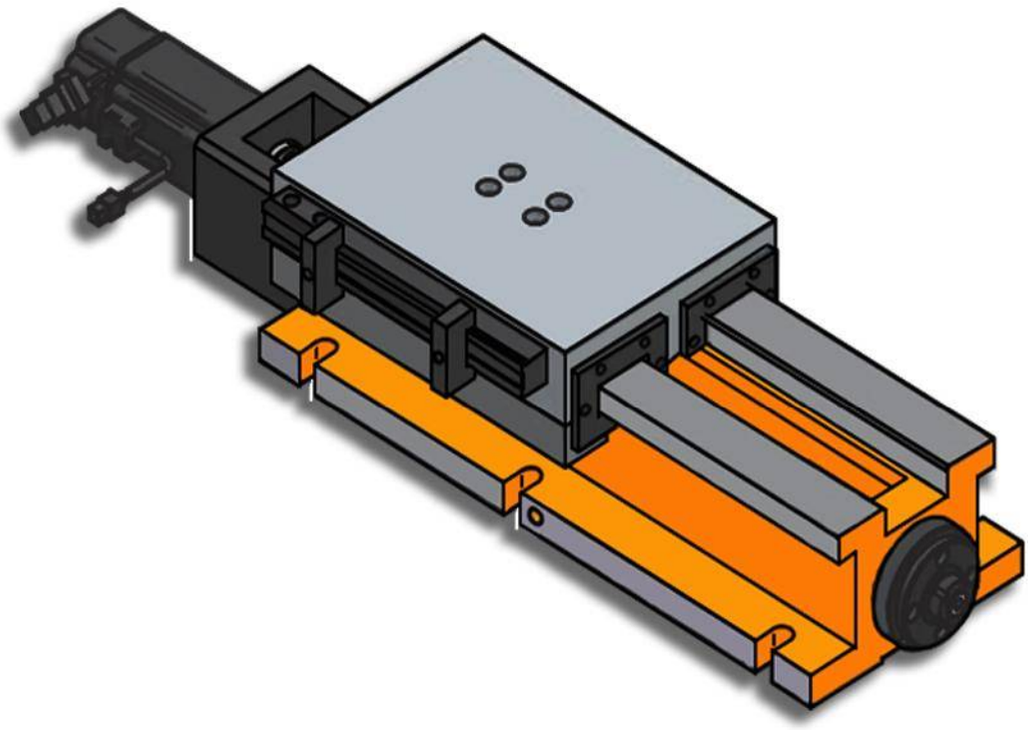

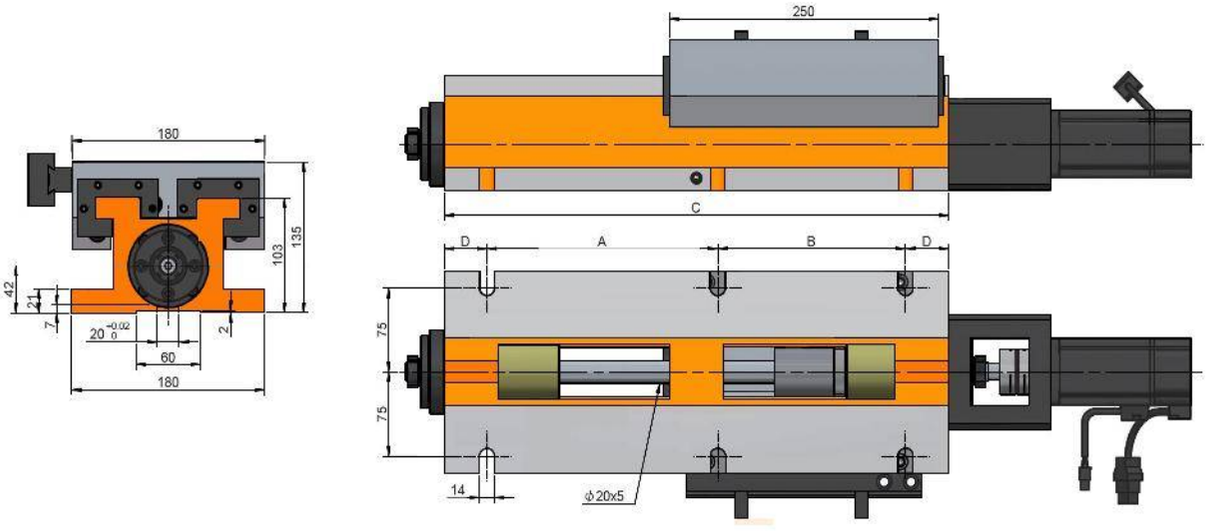
250
C
D
A
B
D
180
135
103
42
21
7
2
20 -0.02 0
60
180
75
75
14
ϕ20x5

Characteristics & Dimensions

MODEL	HS180-250/370
Profile Width	*180.00*
A	*180.00*
B	*140.00*
C	*370.00*
C1	-
C2	-
C3	-
C4	-
C5	-
D	*25.00*
Profile Lenght	*370.00*
Lead Screw Pace	*5 - Ø20*
Total Stroke	*100.00*
System Total Weight (Kg)	*66.00*

*** Roundness ≤ 0.003 mm.
**** All dimension are given in milimeters.

BS180-250/470

Servo Slides With Hardeness Guideways & Ball Screw

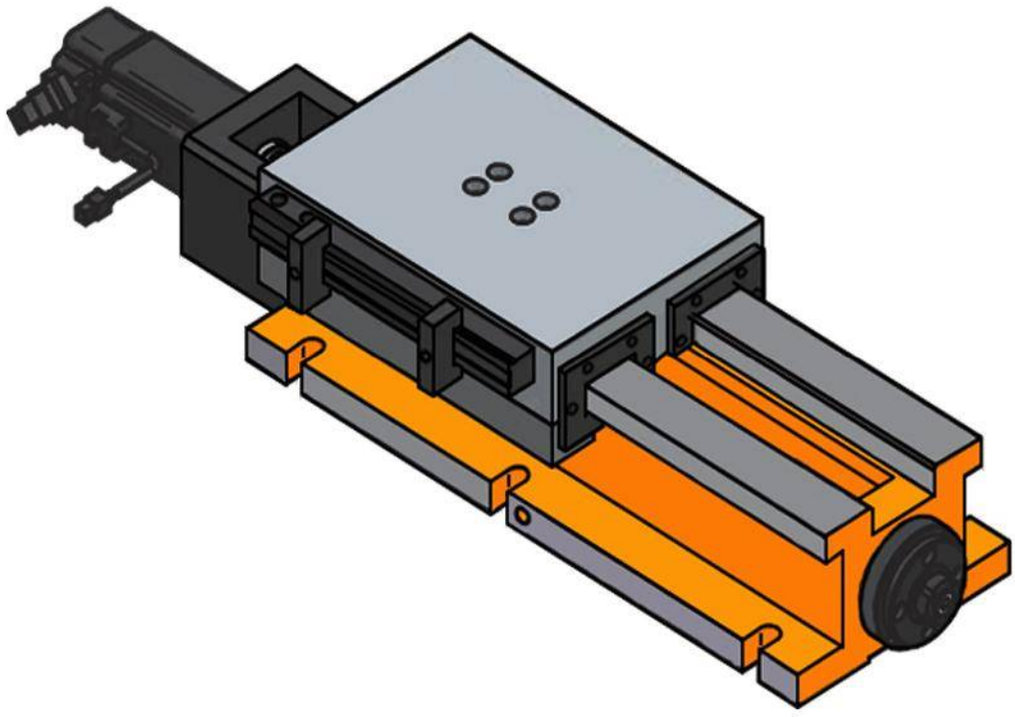

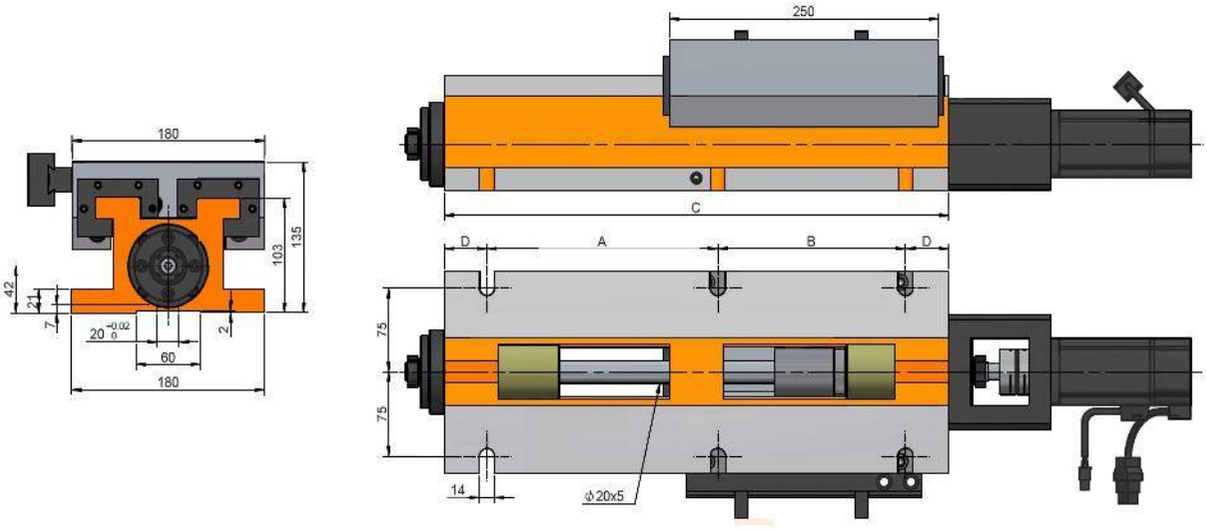
180
135
103
42
21
7
20 -0.02 0
2
60
180
250
C
D
A
B
D
75
75
14
ϕ20x5

Characteristics & Dimensions

MODEL	BS180-250/470
Profile Width	*180.00*
A	*215.00*
B	*175.00*
C	*470.00*
C1	-
C2	-
C3	-
C4	-
C5	-
D	*95.00*
Profile Lenght	*470.00*
Lead Screw Pace	*5 - Ø20*
Total Stroke	*200.00*
System Total Weight (Kg)	*72.00*

*** Roundness ≤ 0.003 mm.
**** All dimension are given in milimeters.

BS220-300/420

Servo Slides With Hardeness Guideways & Ball Screw

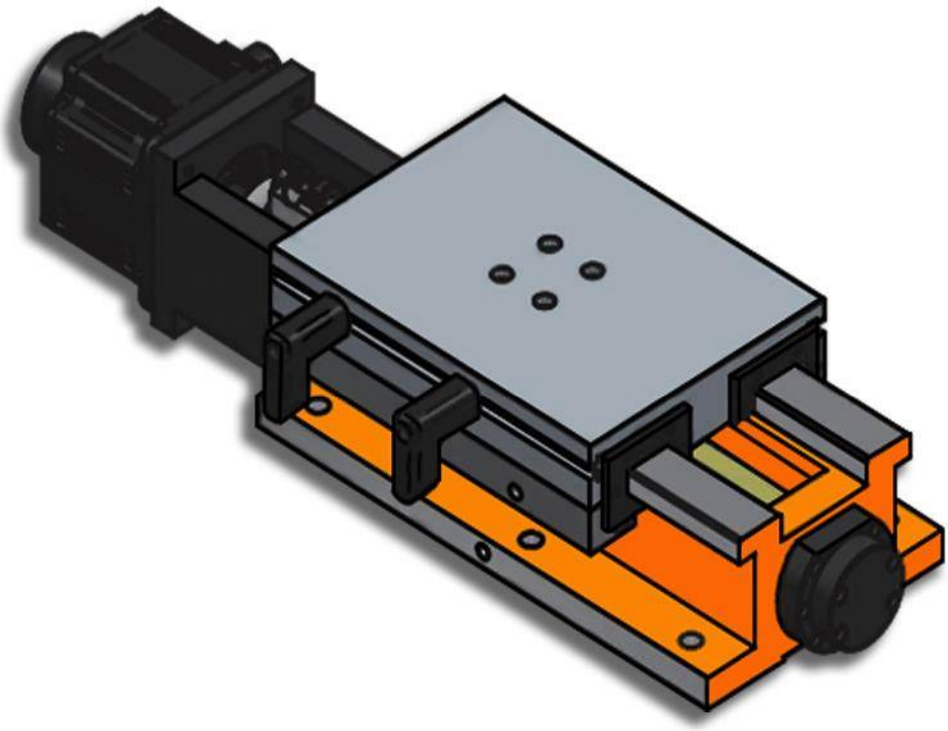

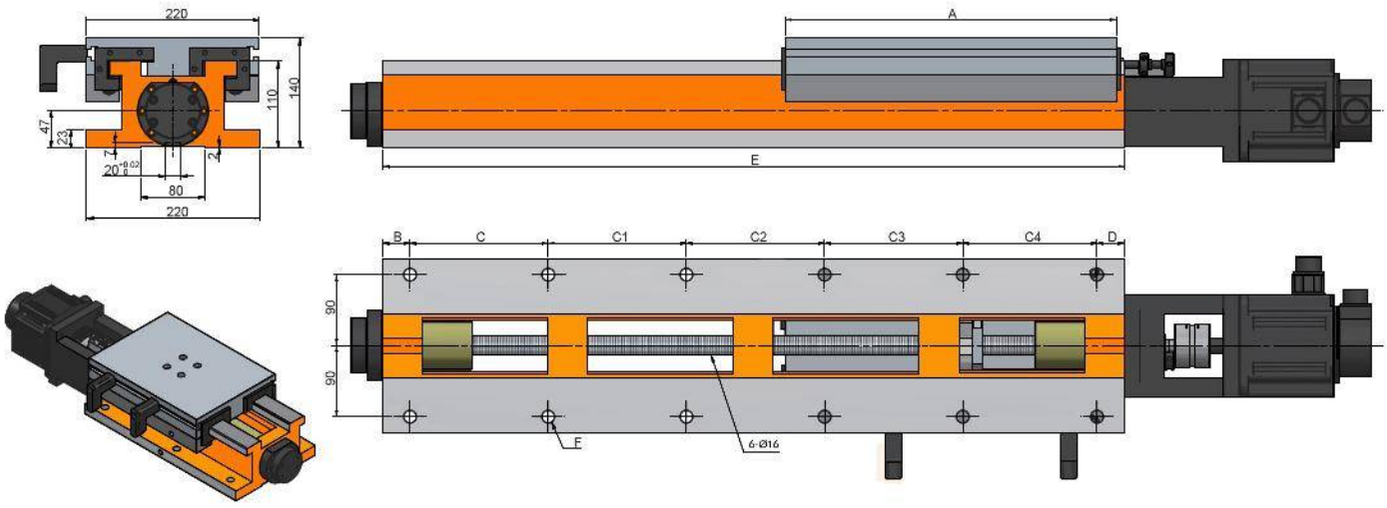
220
140
110
47
23
7
2
20
80
220
A
E
B
C
C1
C2
C3
C4
D
90
90
F
6-Ø16

Characteristics & Dimensions

MODEL	BS220-300/420
Profile Width	*220.00*
A	*300.00*
B	*35.00*
C	*150.00*
C1	*200.00*
C2	-
C3	-
C4	-
C5	-
D	*35.00*
Profile Lenght	*420.00*
Lead Screw Pace	*6 - Ø16*
Total Stroke	*100.00*
System Total Weight (Kg)	*62.00*

*** Roundness ≤ 0.003 mm.
**** All dimension are given in milimeters.

BS220-300/520

Servo Slides With Hardeness Guideways & Ball Screw

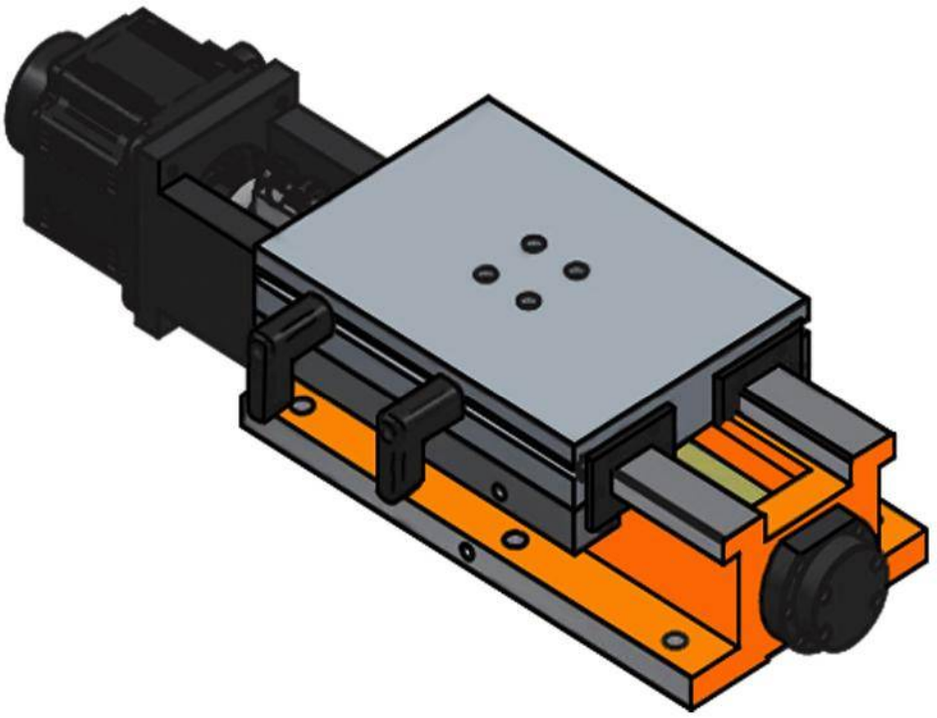

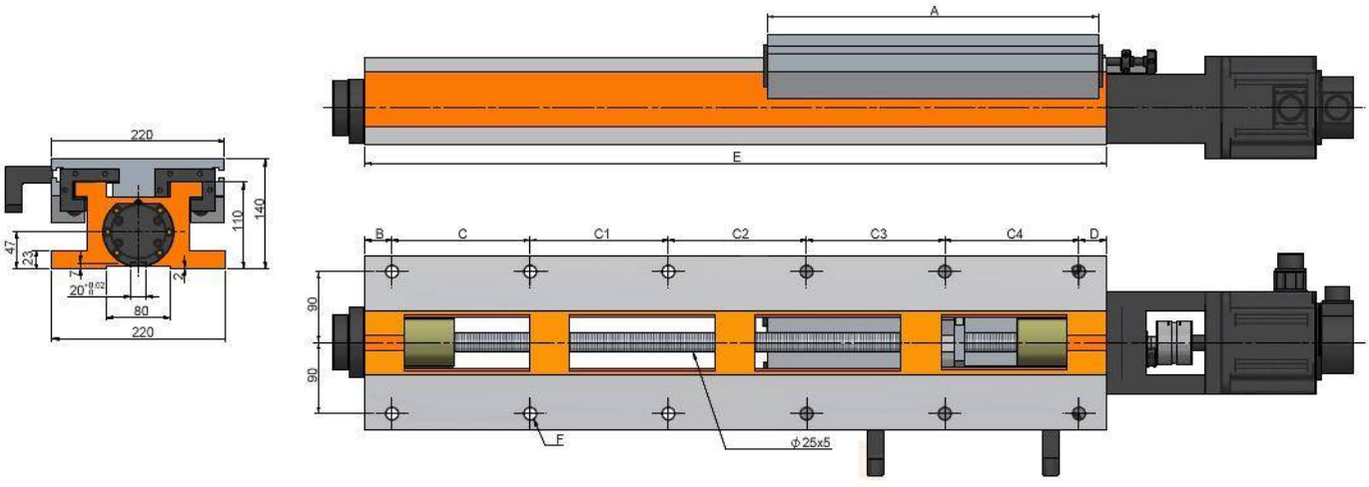
A
E
220
110
140
47
23
7
20
80
220
B
C
C1
C2
C3
C4
D
90
90
F
ϕ25x5

Characteristics & Dimensions

MODEL	BS220-300/520
Profile Width	*220.00*
A	*300.00*
B	*35.00*
C	*150.00*
C1	*150.00*
C2	*150.00*
C3	*-*
C4	*-*
C5	*-*
D	*35.00*
Profile Lenght	*420.00*
Lead Screw Pace	*8 - Ø16*
Total Stroke	*200.00*
System Total Weight (Kg)	*73.00*

***** Roundness ≤ 0.003 mm.*
****** All dimension are given in milimeters.*

BS220-300/670

Servo Slides With Hardeness Guideways & Ball Screw

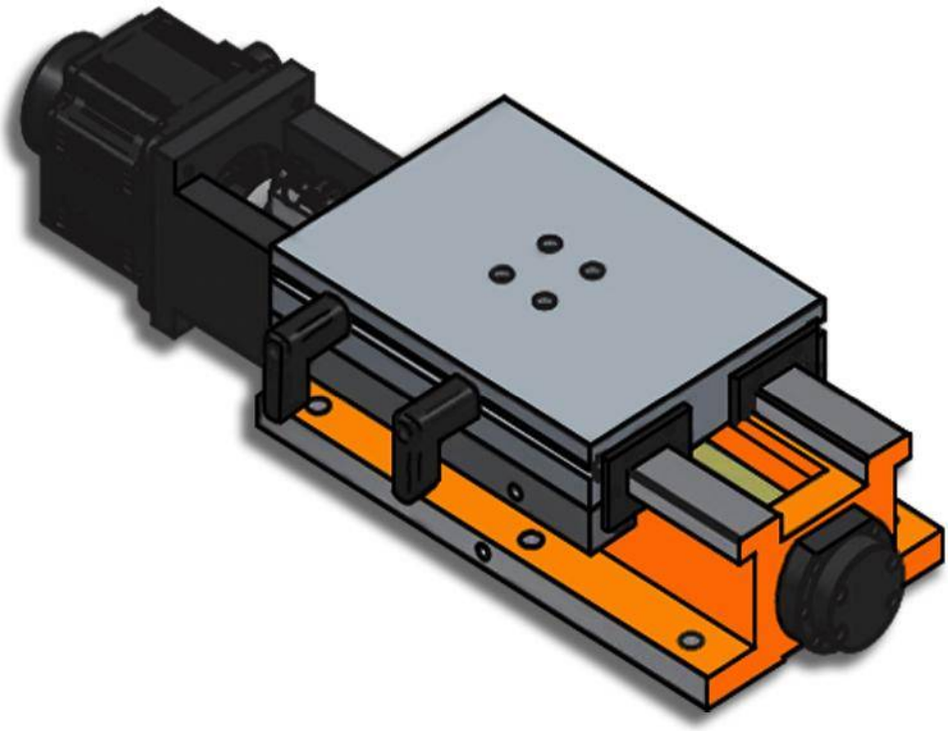

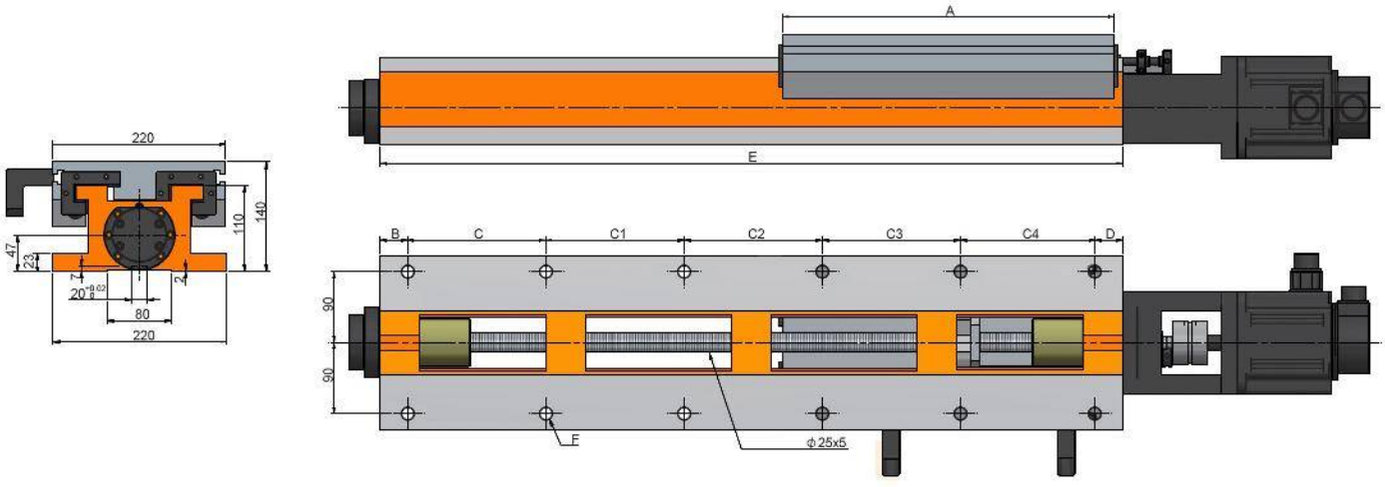
220
140
110
47
23
2
80
220
A
E
B
C
C1
C2
C3
C4
D
90
90
F
ϕ25x5

Characteristics & Dimensions

MODEL	BS220-300/670
Profile Width	*220.00*
A	*300.00*
B	*35.00*
C	*140.00*
C1	*140.00*
C2	*140.00*
C3	*180.00*
C4	*-*
C5	*-*
D	*35.00*
Profile Lenght	*670.00*
Lead Screw Pace	*10 - Ø16*
Total Stroke	*350.00*
System Total Weight (Kg)	*85.00*

***** Roundness ≤ 0.003 mm.*
****** All dimension are given in milimeters.*

BS220-420/670

Servo Slides With Hardeness Guideways & Ball Screw

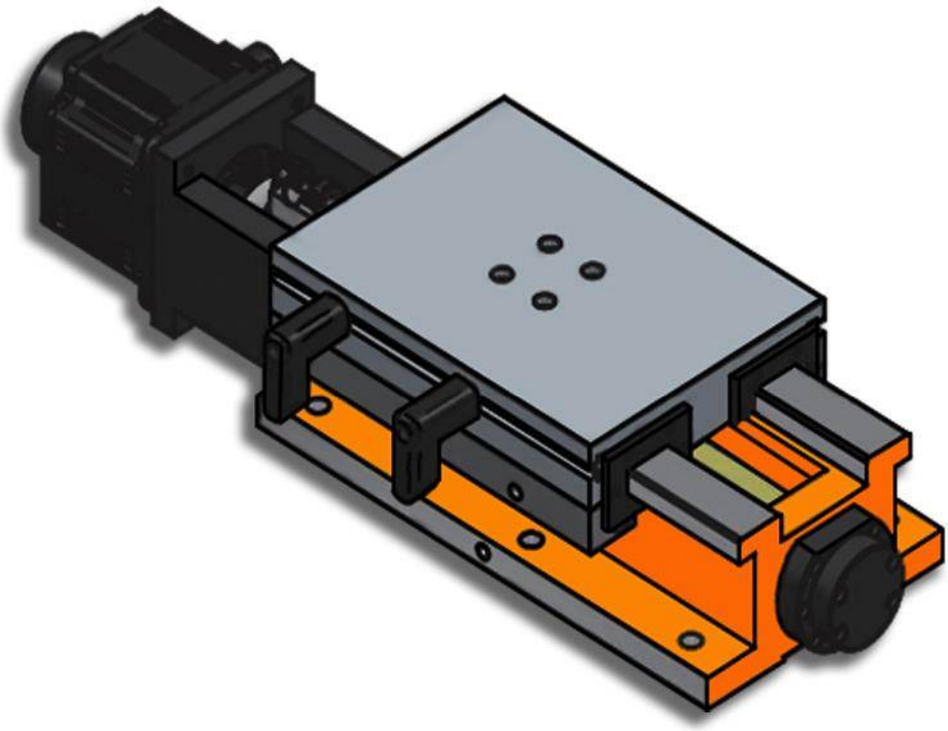

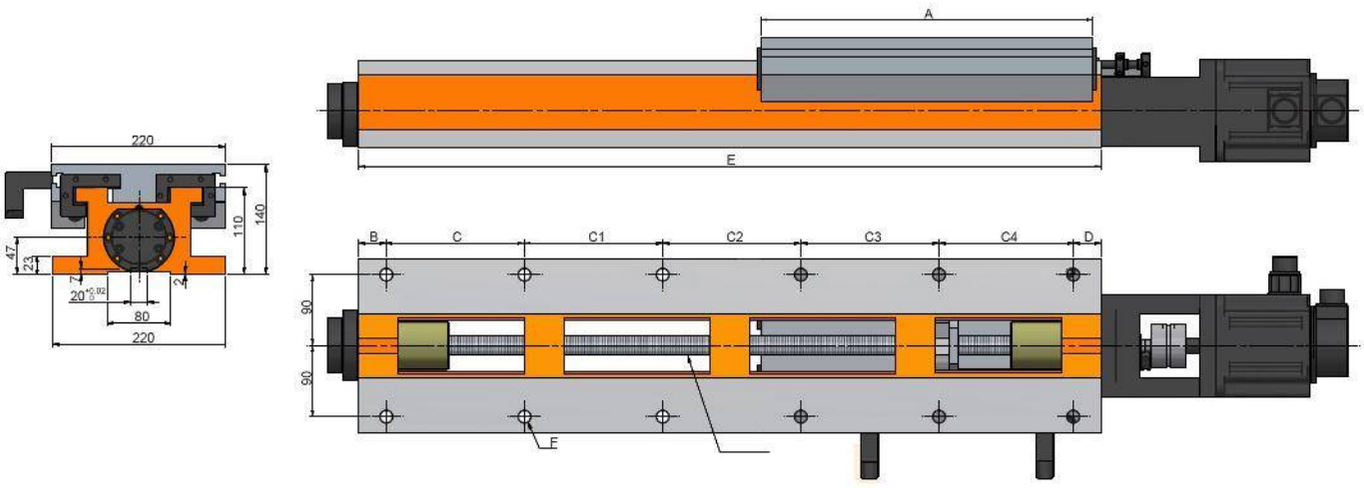
A
E
220
140
110
47
23
7
2
80
220
B
C
C1
C2
C3
C4
D
90
90
F

Characteristics & Dimensions

MODEL	BS220-420/670
Profile Width	*220.00*
A	*420.00*
B	*35.00*
C	*140.00*
C1	*140.00*
C2	*140.00*
C3	*180.00*
C4	*-*
C5	*-*
D	*35.00*
Profile Lenght	*670.00*
Lead Screw Pace	*10 - Ø16*
Total Stroke	*230.00*
System Total Weight (Kg)	*90.00*

***** Roundness ≤ 0.003 mm.*
****** All dimension are given in milimeters.*

BS220-420/800

Servo Slides With Hardeness Guideways & Ball Screw

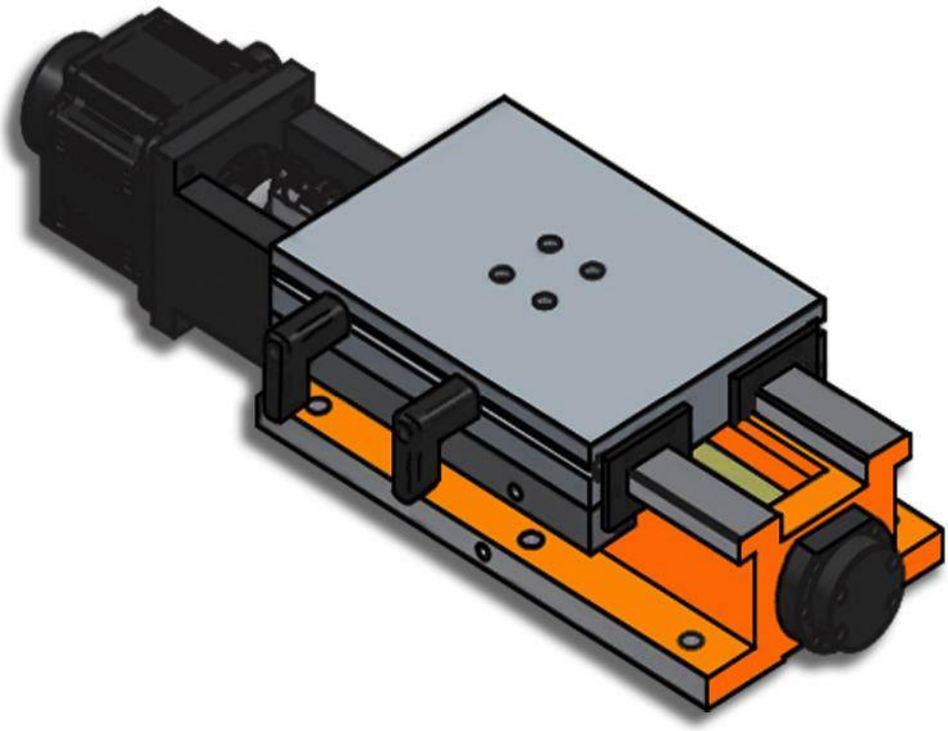

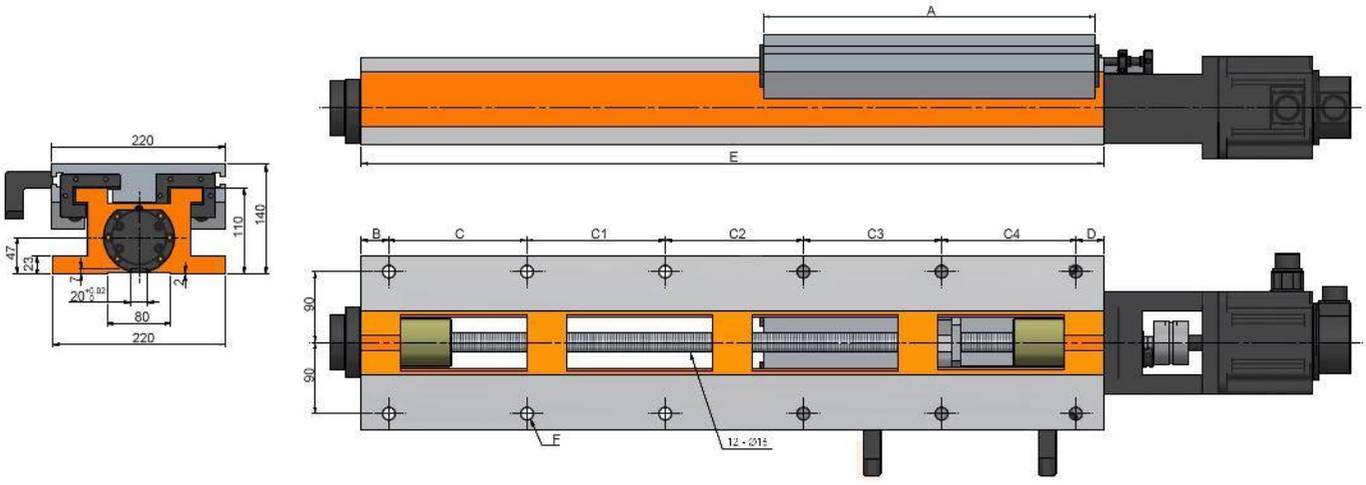
A
E
220
140
110
47
23
7
20
80
220
B
C
C1
C2
C3
C4
D
90
90
F
12 - Ø15

Characteristics & Dimensions

MODEL	BS220-420/800
Profile Width	*220.00*
A	*420.00*
B	*35.00*
C	*140.00*
C1	*140.00*
C2	*140.00*
C3	*140.00*
C4	*170.00*
C5	*-*
D	*35.00*
Profile Lenght	*800.00*
Lead Screw Pace	*12 - Ø16*
Total Stroke	*360.00*
System Total Weight (Kg)	*95.00*

***** Roundness ≤ 0.003 mm.*
****** All dimension are given in milimeters.*

BS220-420/940

Servo Slides With Hardeness Guideways & Ball Screw

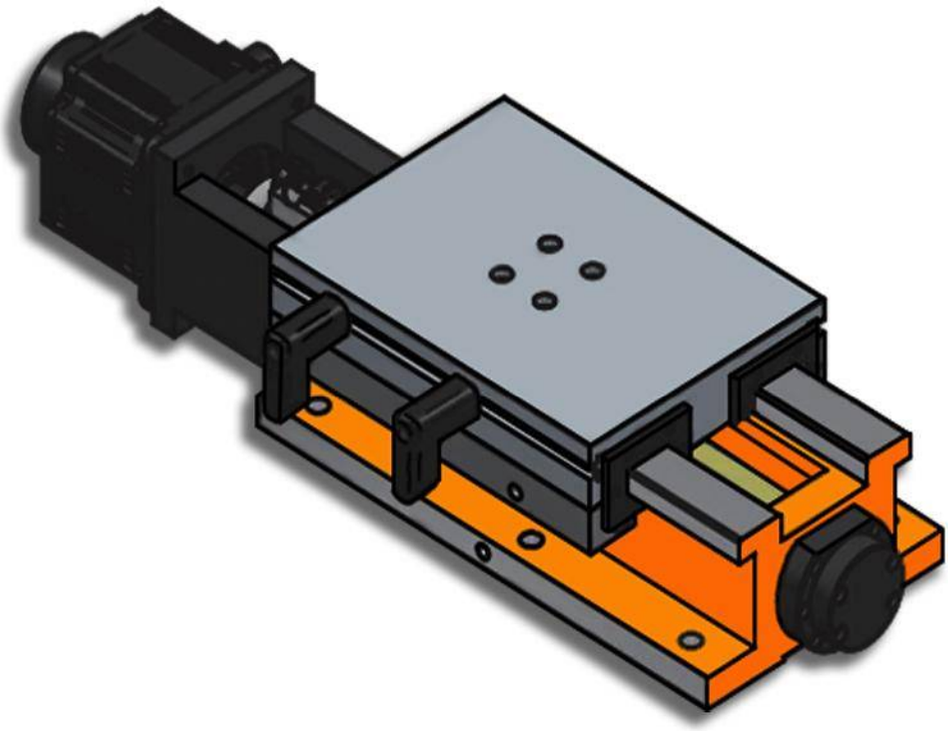

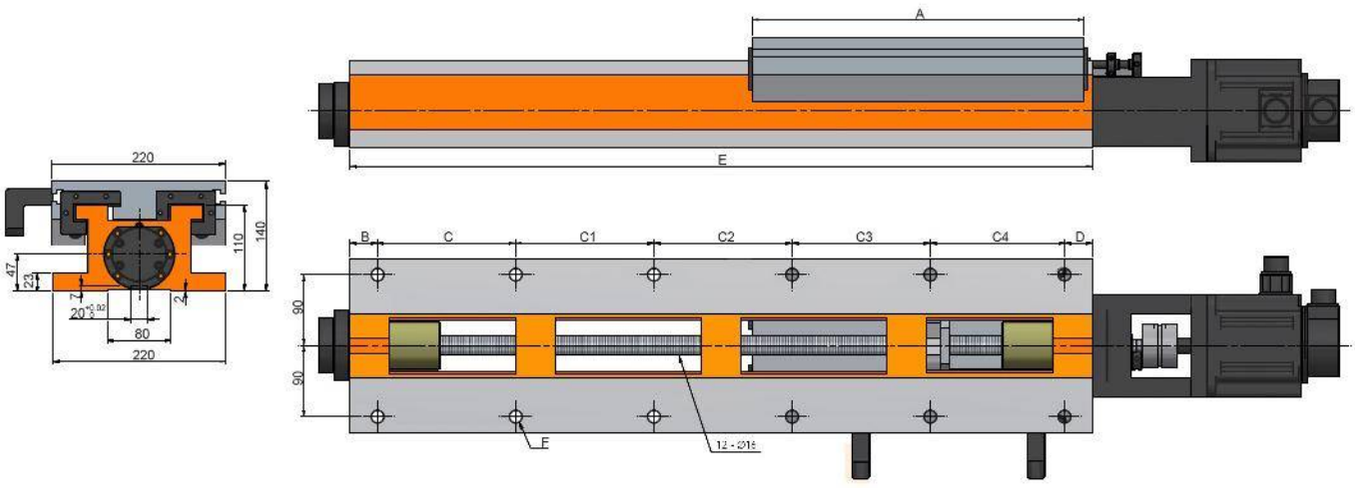
A
E
220
140
110
47
23
7
20
80
220
B
C
C1
C2
C3
C4
D
90
90
F
12 - Ø15

Characteristics & Dimensions

MODEL	BS220-420/940
Profile Width	*220.00*
A	*420.00*
B	*35.00*
C	*175.00*
C1	*175.00*
C2	*175.00*
C3	*175.00*
C4	*170.00*
C5	*-*
D	*35.00*
Profile Lenght	*940.00*
Lead Screw Pace	*12 - Ø16*
Total Stroke	*500.00*
System Total Weight (Kg)	*110.00*

***** Roundness ≤ 0.003 mm.*
****** All dimension are given in milimeters.*

BS250-300/420

Servo Slides With Hardeness Guideways & Ball Screw

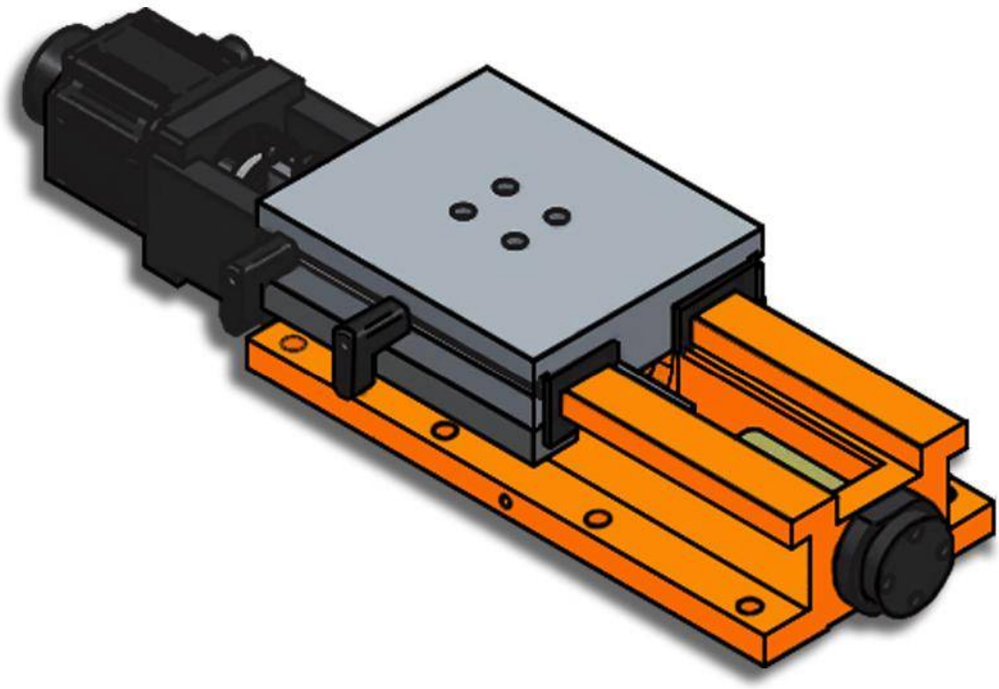

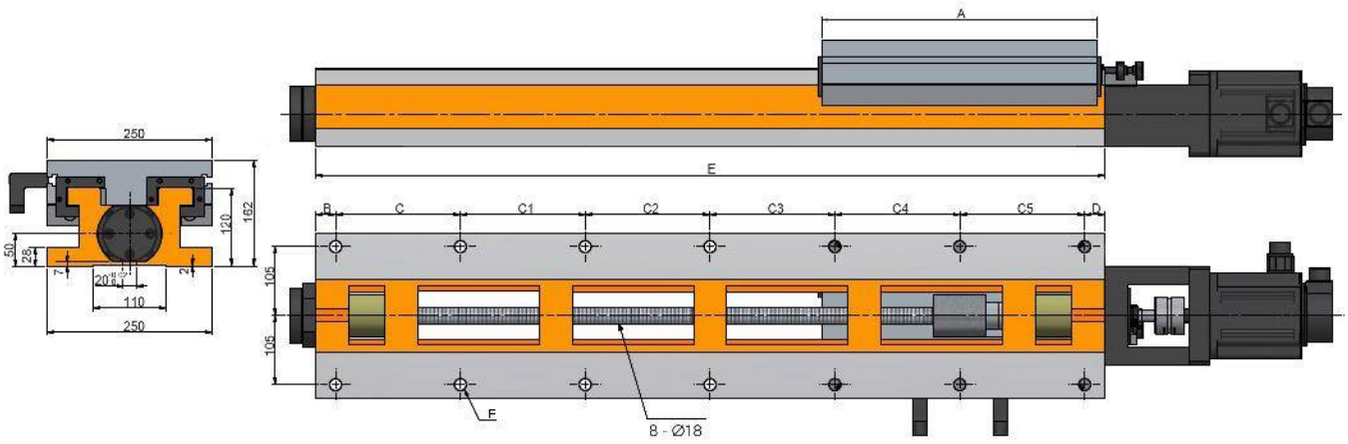
A
E
B
C
C1
C2
C3
C4
C5
D
250
162
120
50
28
7
20
110
250
105
105
F
8 - Ø18

Characteristics & Dimensions

MODEL	BS250-300/420
Profile Width	*250.00*
A	*300.00*
B	*35.00*
C	*150.00*
C1	*200.00*
C2	-
C3	-
C4	-
C5	-
D	*35.00*
Profile Lenght	*420.00*
Lead Screw Pace	*6 -Ø18*
Total Stroke	*100.00*
System Total Weight (Kg)	*82.00*

*** Roundness ≤ 0.003 mm.
**** All dimension are given in milimeters.

BS250-300/560

Servo Slides With Hardeness Guideways & Ball Screw

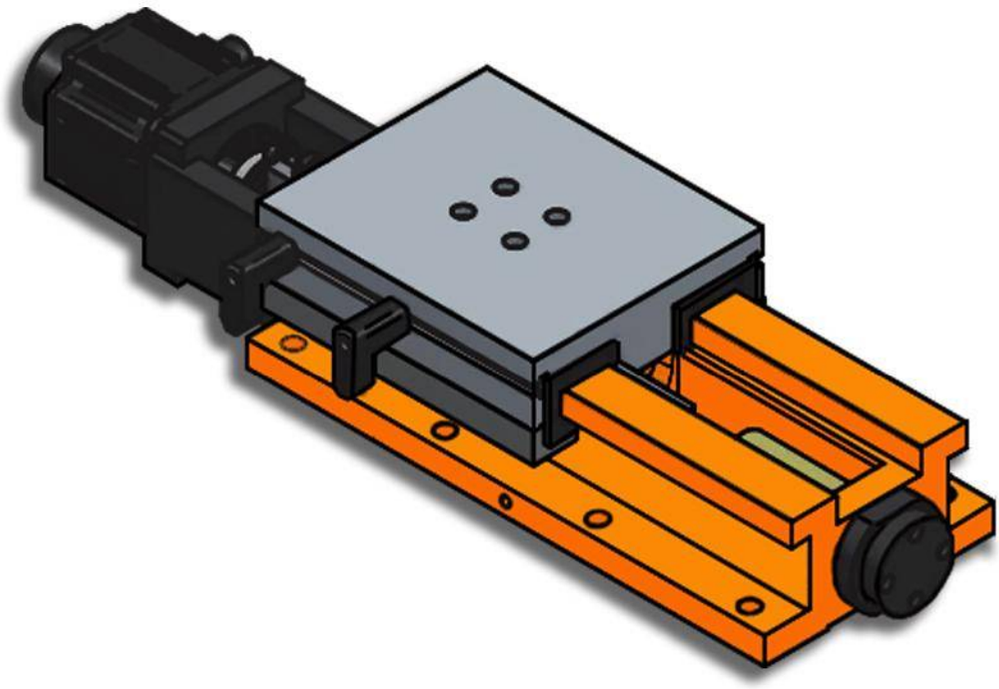

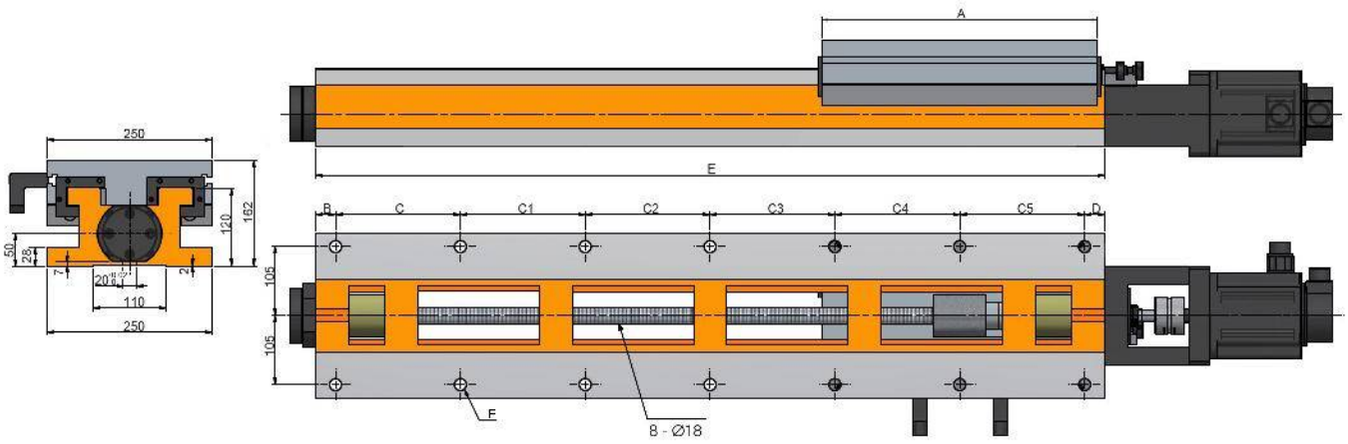
A
E
B
C
C1
C2
C3
C4
C5
D
250
162
120
50
28
7
20
110
250
105
105
F
8 - Ø18

Characteristics & Dimensions

MODEL	BS250-300/560
Profile Width	*250.00*
A	*300.00*
B	*35.00*
C	*165.00*
C1	*165.00*
C2	*165.00*
C3	*-*
C4	*-*
C5	*-*
D	*30.00*
Profile Lenght	*560.00*
Lead Screw Pace	*8 - Ø18*
Total Stroke	*240.00*
System Total Weight (Kg)	*90.00*

***** Roundness ≤ 0.003 mm.*
****** All dimension are given in milimeters.*

BS250-420/560

Servo Slides With Hardeness Guideways & Ball Screw

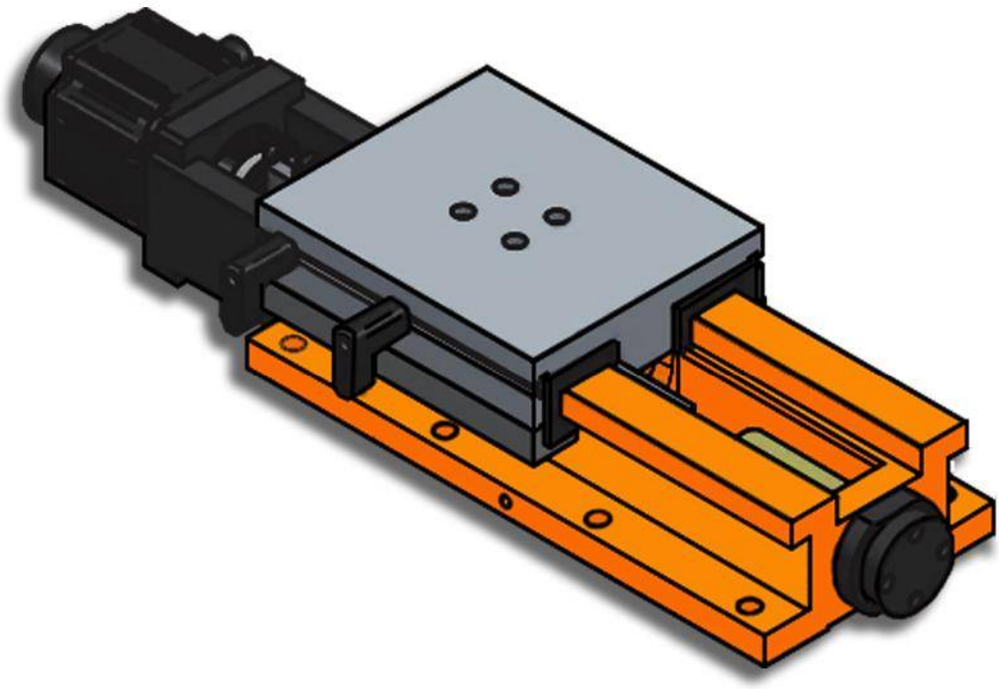

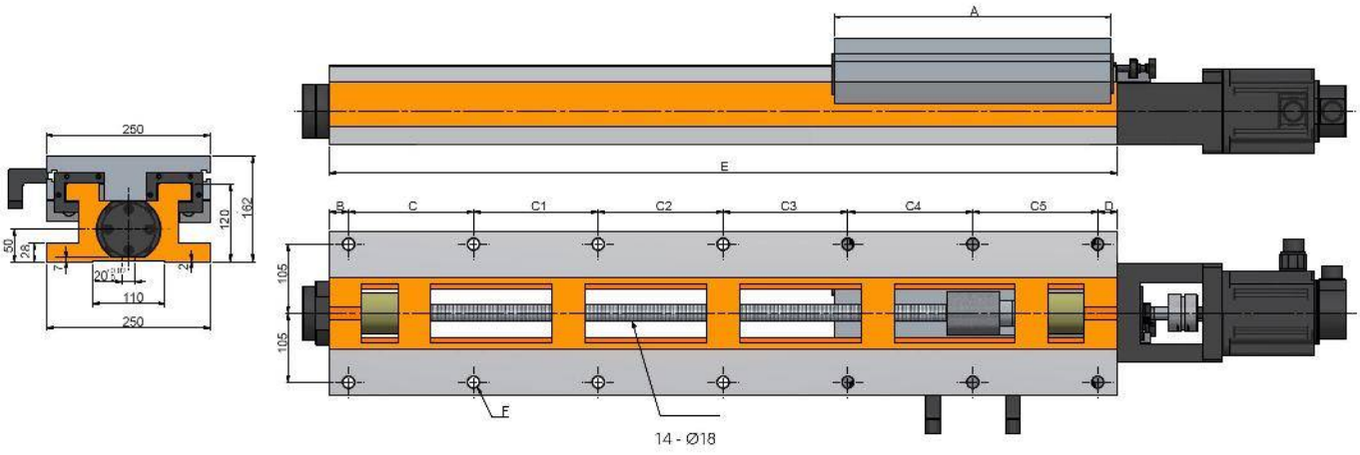
A
E
B
C
C1
C2
C3
C4
C5
D
250
162
120
50
28
7
20
110
250
105
105
F
14 - Ø18

Characteristics & Dimensions

MODEL	BS250-420/560
Profile Width	*250.00*
A	*420.00*
B	*35.00*
C	*165.00*
C1	*165.00*
C2	*165.00*
C3	*-*
C4	*-*
C5	*-*
D	*30.00*
Profile Lenght	*560.00*
Lead Screw Pace	*8 - Ø18*
Total Stroke	*120.00*
System Total Weight (Kg)	*94.00*

***** Roundness ≤ 0.003 mm.*
****** All dimension are given in milimeters.*

BS250-420/670

Servo Slides With Hardeness Guideways & Ball Screw

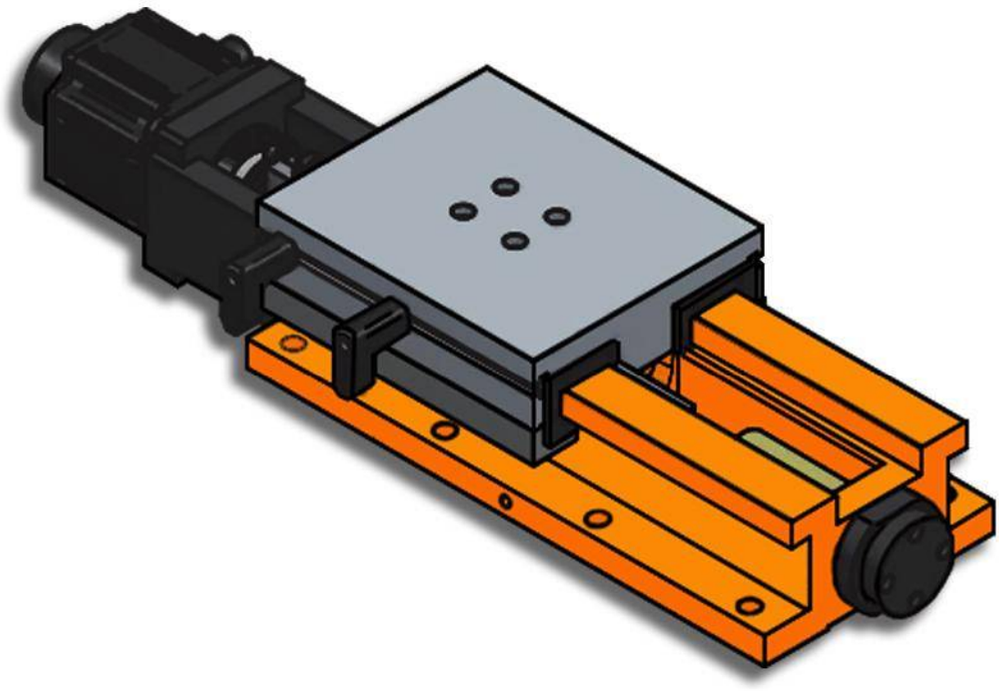

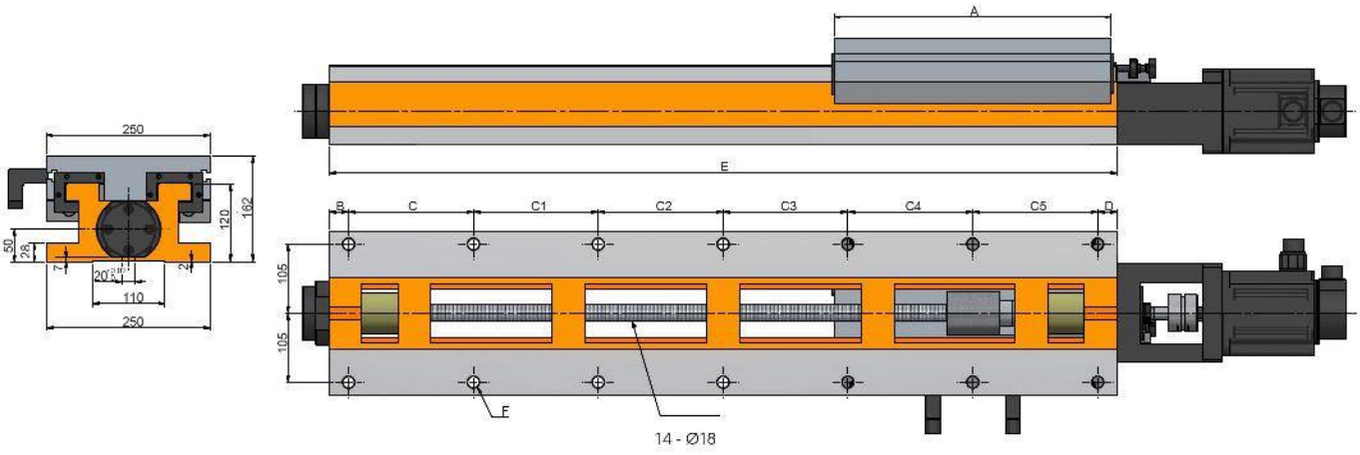
A
E
B
C
C1
C2
C3
C4
C5
D
250
162
120
50
28
7
20
110
250
105
105
F
14 - Ø18

Characteristics & Dimensions

MODEL	BS250-420/670
Profile Width	*250.00*
A	*420.00*
B	*35.00*
C	*140.00*
C1	*140.00*
C2	*140.00*
C3	*180.00*
C4	*-*
C5	*-*
D	*35.00*
Profile Lenght	*670.00*
Lead Screw Pace	*10 - Ø18*
Total Stroke	*230.00*
System Total Weight (Kg)	*110.00*

***** Roundness ≤ 0.003 mm.*
****** All dimension are given in milimeters.*

BS250-420/750

Servo Slides With Hardeness Guideways & Ball Screw

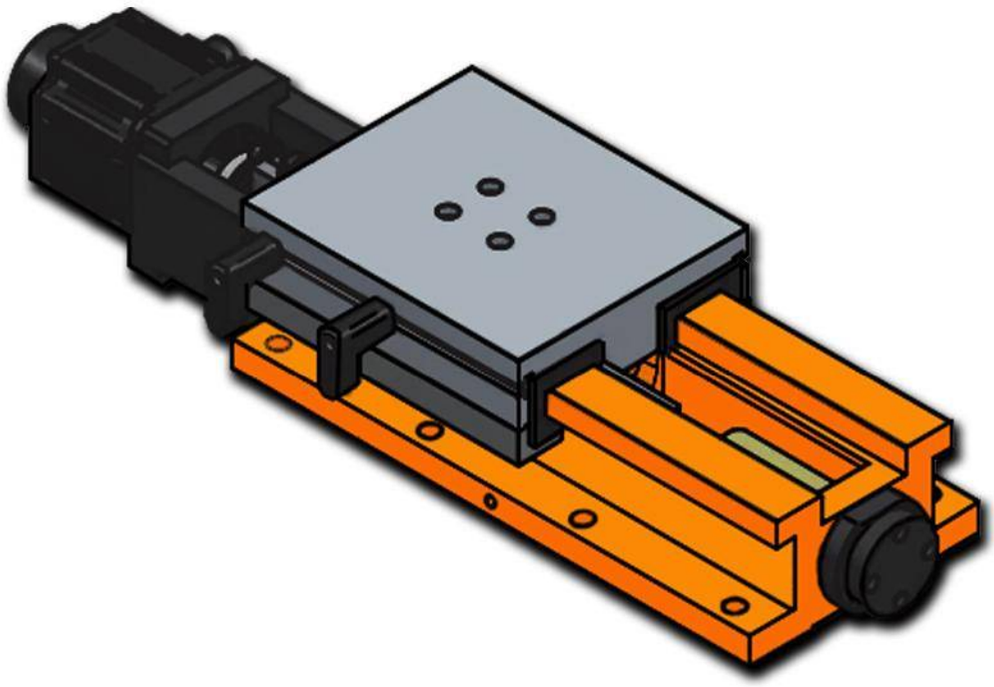

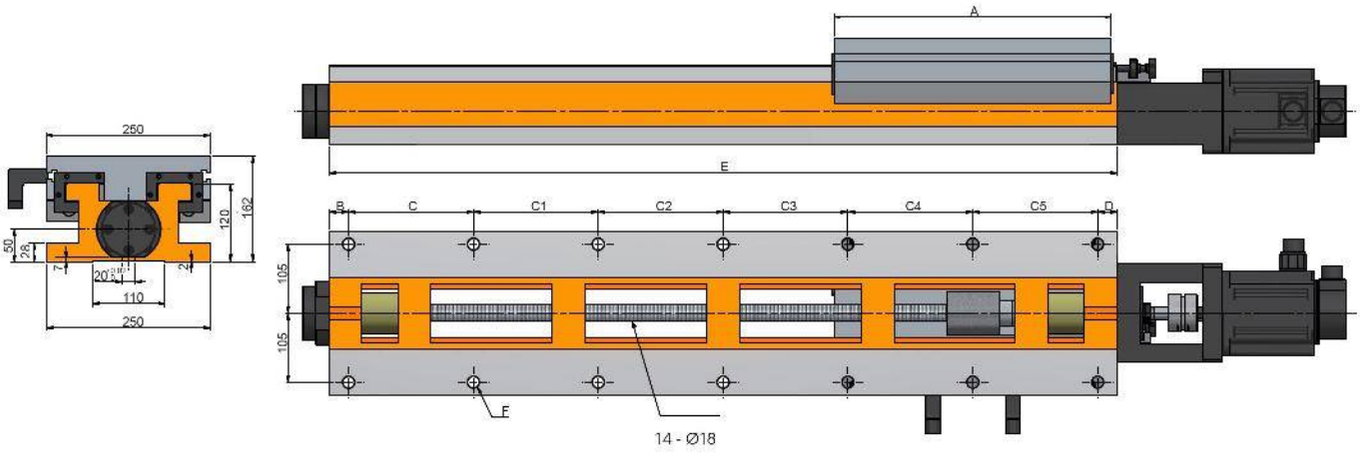
A
E
B
C
C1
C2
C3
C4
C5
D
250
162
120
50
28
7
20
110
250
105
105
F
14 - Ø18

Characteristics & Dimensions

MODEL	BS250-420/750
Profile Width	*250.00*
A	*420.00*
B	*25.00*
C	*140.00*
C1	*140.00*
C2	*140.00*
C3	*140.00*
C4	*140.00*
C5	*-*
D	*25.00*
Profile Lenght	*750.00*
Lead Screw Pace	*12 - Ø18*
Total Stroke	*310.00*
System Total Weight (Kg)	*130.00*

*** Roundness ≤ 0.003 mm.
**** All dimension are given in milimeters.

BS250-420/940

Servo Slides With Hardeness Guideways & Ball Screw

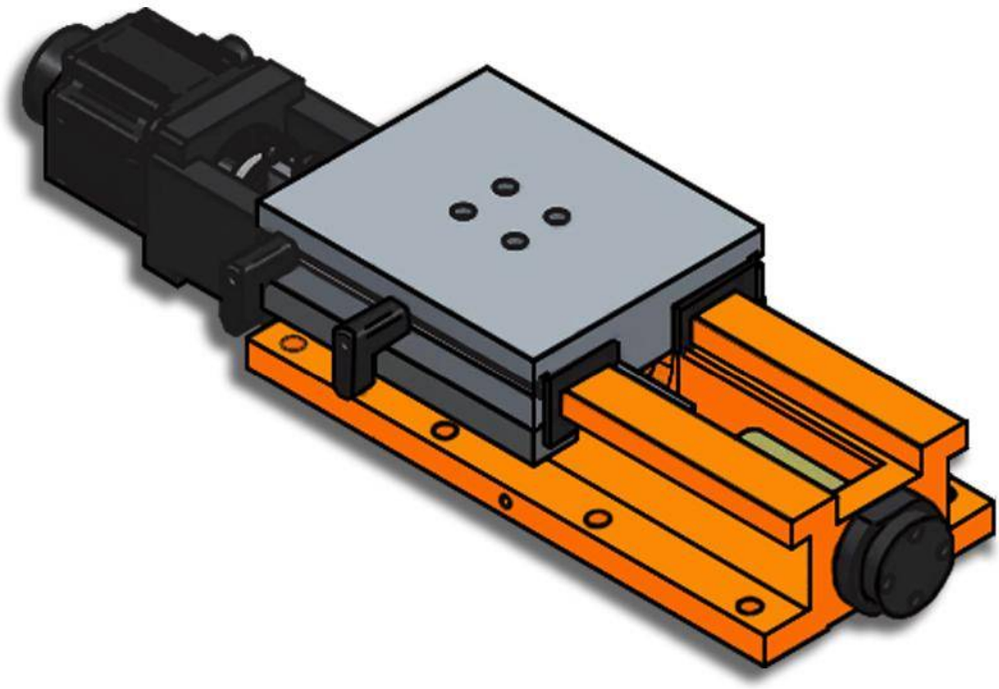

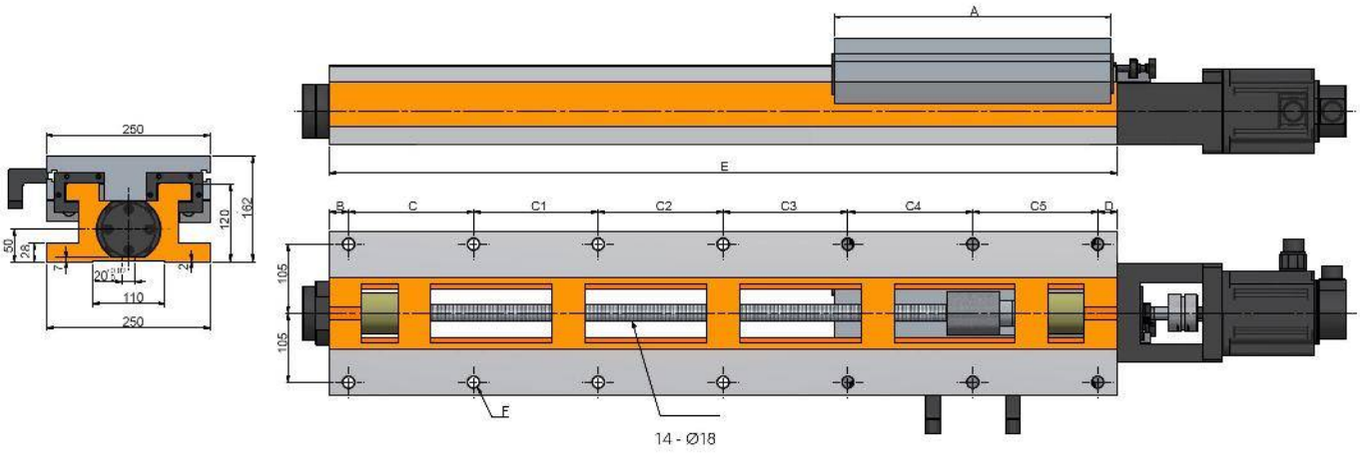
A
E
B
C
C1
C2
C3
C4
C5
D
250
162
120
50
28
7
20
110
250
105
105
F
14 - Ø18

Characteristics & Dimensions

MODEL	BS250-420/940
Profile Width	*220.00*
A	*420.00*
B	*35.00*
C	*175.00*
C1	*175.00*
C2	*175.00*
C3	*175.00*
C4	*175.00*
C5	*-*
D	*30.00*
Profile Lenght	*940.00*
Lead Screw Pace	*12 - Ø16*
Total Stroke	*500.00*
System Total Weight (Kg)	*155.00*

***** Roundness ≤ 0.003 mm.*
****** All dimension are given in milimeters.*

BS250-420/1200

Servo Slides With Hardeness Guideways & Ball Screw

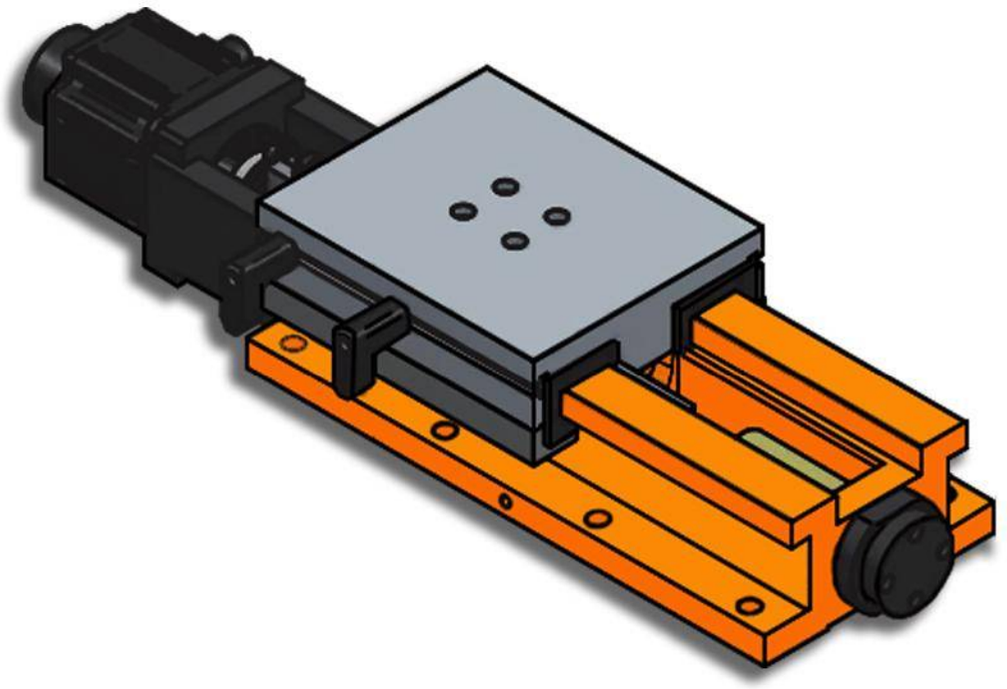

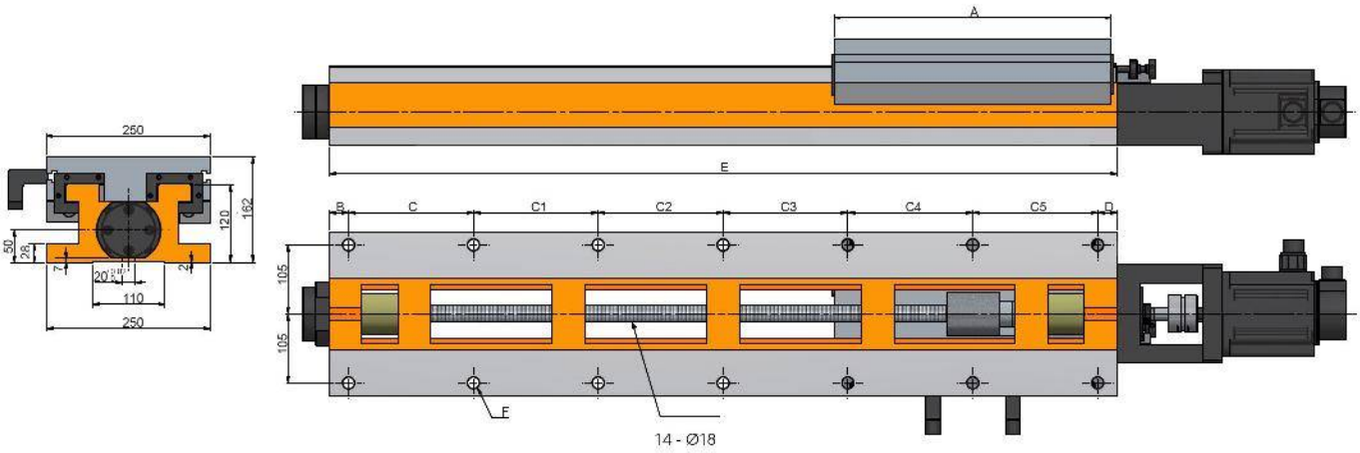
A
E
B
C
C1
C2
C3
C4
C5
D
105
105
F
14 - Ø18
250
162
120
50
28
7
20
110
250

Characteristics & Dimensions

MODEL	BS250-420/1200
Profile Width	*250.00*
A	*420.00*
B	*30.00*
C	*190.00*
C1	*190.00*
C2	*190.00*
C3	*190.00*
C4	*190.00*
C5	*190.00*
D	*30.00*
Profile Lenght	*1,200.00*
Lead Screw Pace	*14 - Ø18*
Total Stroke	*760.00*
System Total Weight (Kg)	*192.00*

***** Roundness ≤ 0.003 mm.*
****** All dimension are given in milimeters.*

BS300-300/420

Servo Slides With Hardeness Guideways & Ball Screw

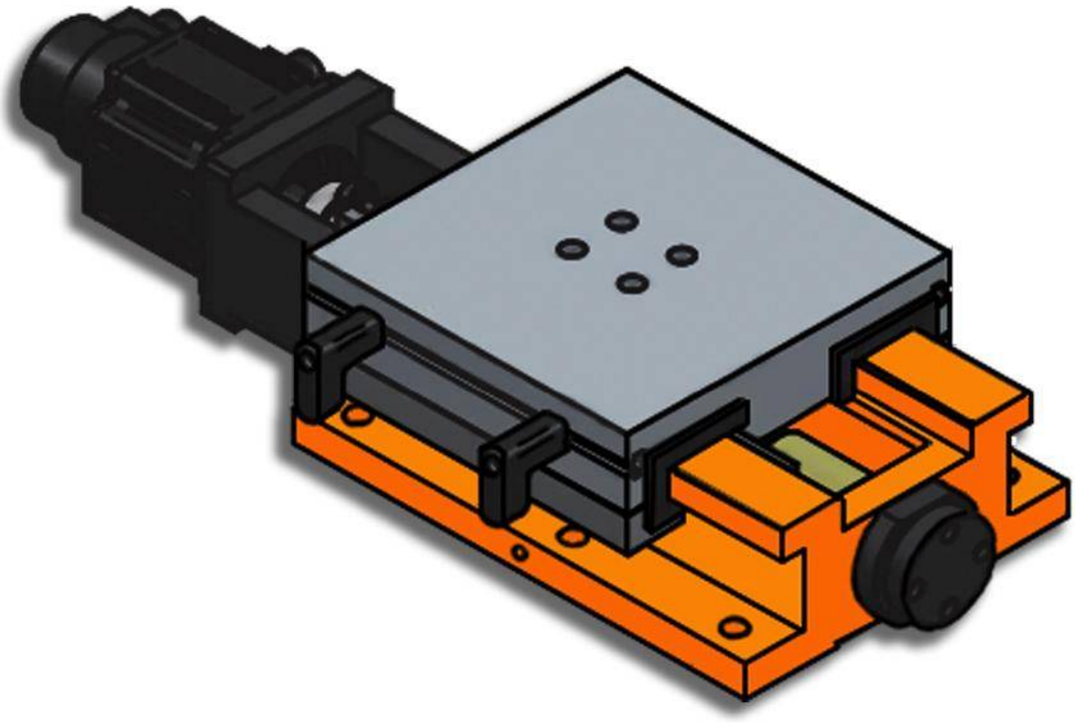

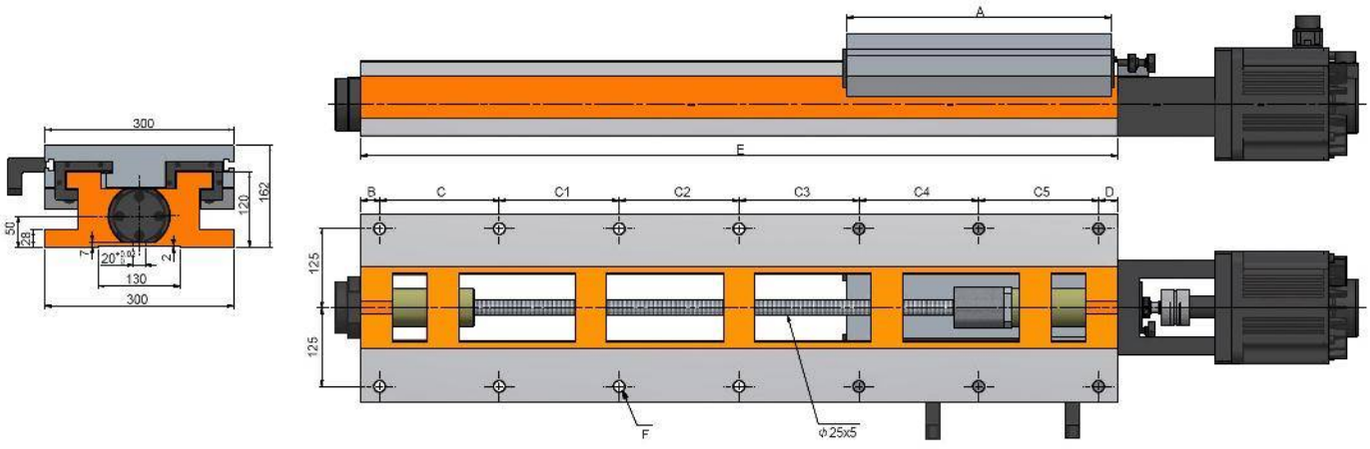
300
162
120
50
28
7
20
2
130
300
A
E
B
C
C1
C2
C3
C4
C5
D
125
125
F
Φ25x5

Characteristics & Dimensions

MODEL	BS300-300/420
Profile Width	*300.00*
A	*300.00*
B	*35.00*
C	*150.00*
C1	*200.00*
C2	-
C3	-
C4	-
C5	-
D	*35.00*
Profile Lenght	*420.00*
Lead Screw Pace	*100.00*
Total Stroke	*6 - Ø18*
System Total Weight (Kg)	*100.00*

***** Roundness ≤ 0.003 mm.*
****** All dimension are given in milimeters.*

BS300-360/560

Servo Slides With Hardeness Guideways & Ball Screw

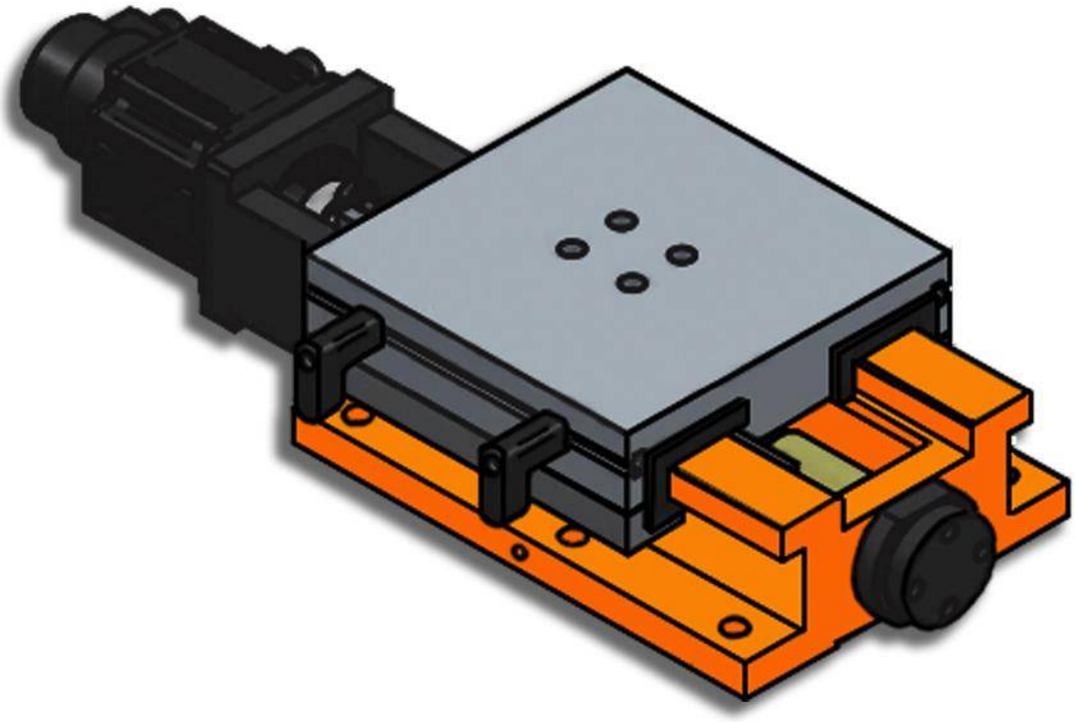

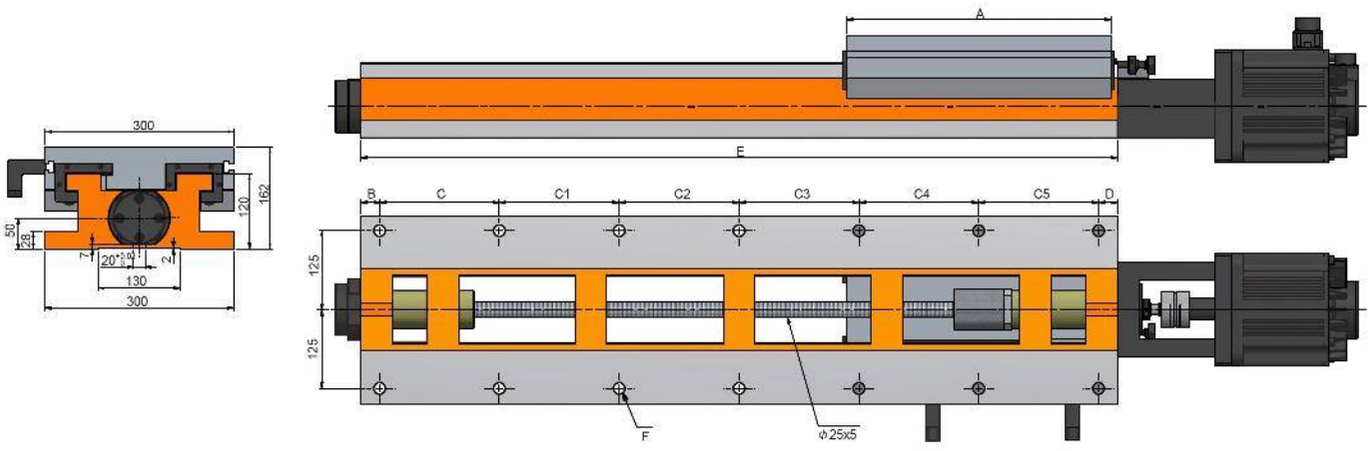
300
162
120
50
28
7
20
2
130
300
A
E
B
C
C1
C2
C3
C4
C5
D
125
125
F
Φ25x5

Characteristics & Dimensions

MODEL	BS300-360/560
Profile Width	*300.00*
A	*360.00*
B	*35.00*
C	*165.00*
C1	*165.00*
C2	*165.00*
C3	-
C4	-
C5	-
D	*30.00*
Profile Lenght	*560.00*
Lead Screw Pace	*180.00*
Total Stroke	*8 - Ø18*
System Total Weight (Kg)	*115.00*

*** Roundness ≤ 0.003 mm.
**** All dimension are given in milimeters.

BS300-420/560

Servo Slides With Hardeness Guideways & Ball Screw

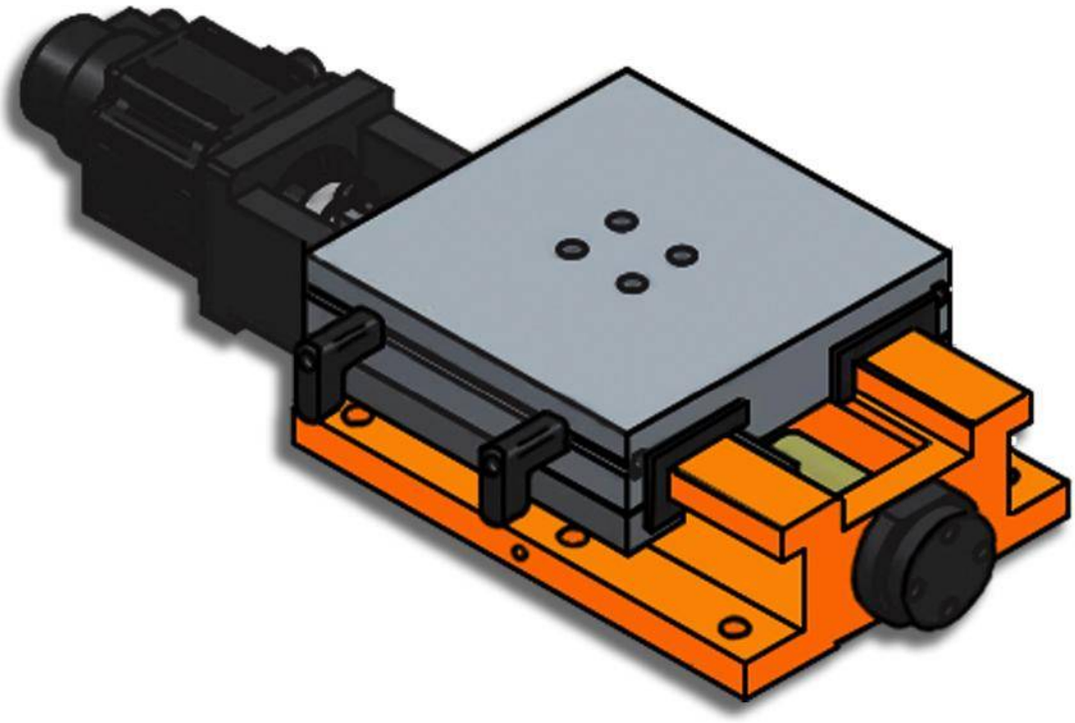

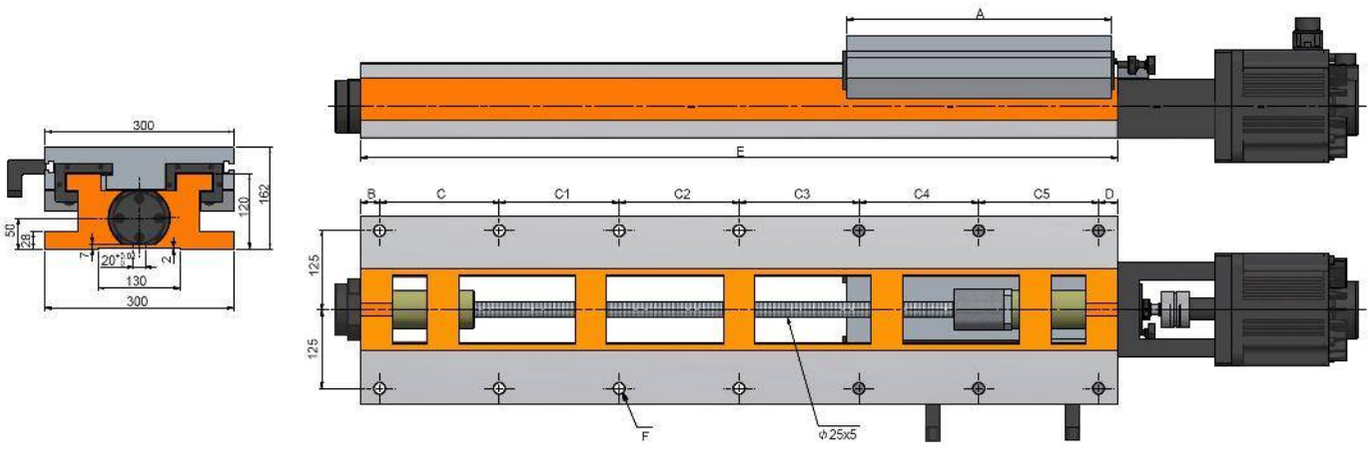
300
120
162
50
28
7
20
2
130
300
A
E
B
C
C1
C2
C3
C4
C5
D
125
125
F
Φ25x5

Characteristics & Dimensions

MODEL	BS300-420/560
Profile Width	*300.00*
A	*420.00*
B	*35.00*
C	*165.00*
C1	*165.00*
C2	*165.00*
C3	*-*
C4	*-*
C5	*-*
D	*30.00*
Profile Lenght	*560.00*
Lead Screw Pace	*120.00*
Total Stroke	*8 - Ø18*
System Total Weight (Kg)	*117.00*

***** Roundness ≤ 0.003 mm.*
****** All dimension are given in milimeters.*

BS300-420/670

Servo Slides With Hardeness Guideways & Ball Screw

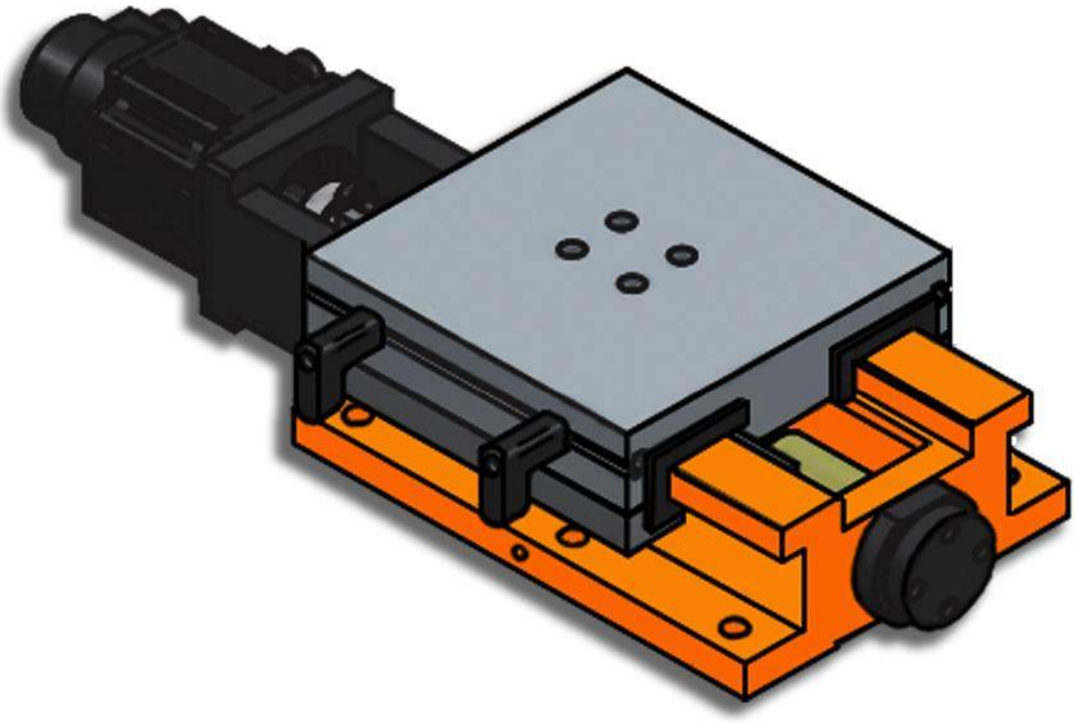

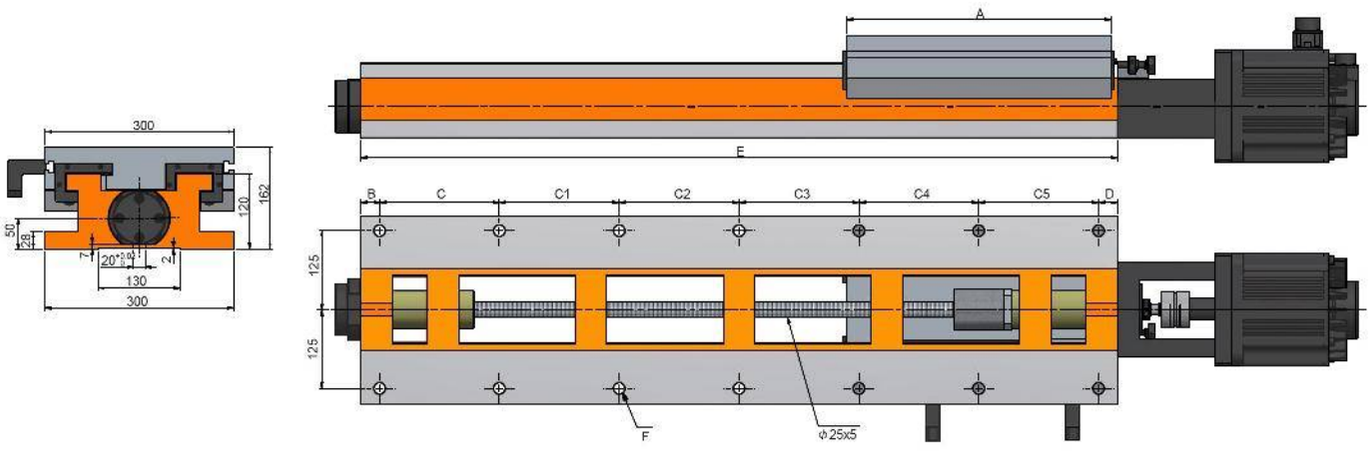
300
162
120
50
28
7
20
2
130
300
A
E
B
C
C1
C2
C3
C4
C5
D
125
125
F
Φ25x5

Characteristics & Dimensions

MODEL	BS300-420/670
Profile Width	*300.00*
A	*420.00*
B	*35.00*
C	*140.00*
C1	*140.00*
C2	*140.00*
C3	*180.00*
C4	*-*
C5	*-*
D	*35.00*
Profile Lenght	*670.00*
Lead Screw Pace	*230.00*
Total Stroke	*10 - Ø18*
System Total Weight (Kg)	*135.00*

***** Roundness ≤ 0.003 mm.*
****** All dimension are given in milimeters.*

BS300-420/800

Servo Slides With Hardeness Guideways & Ball Screw

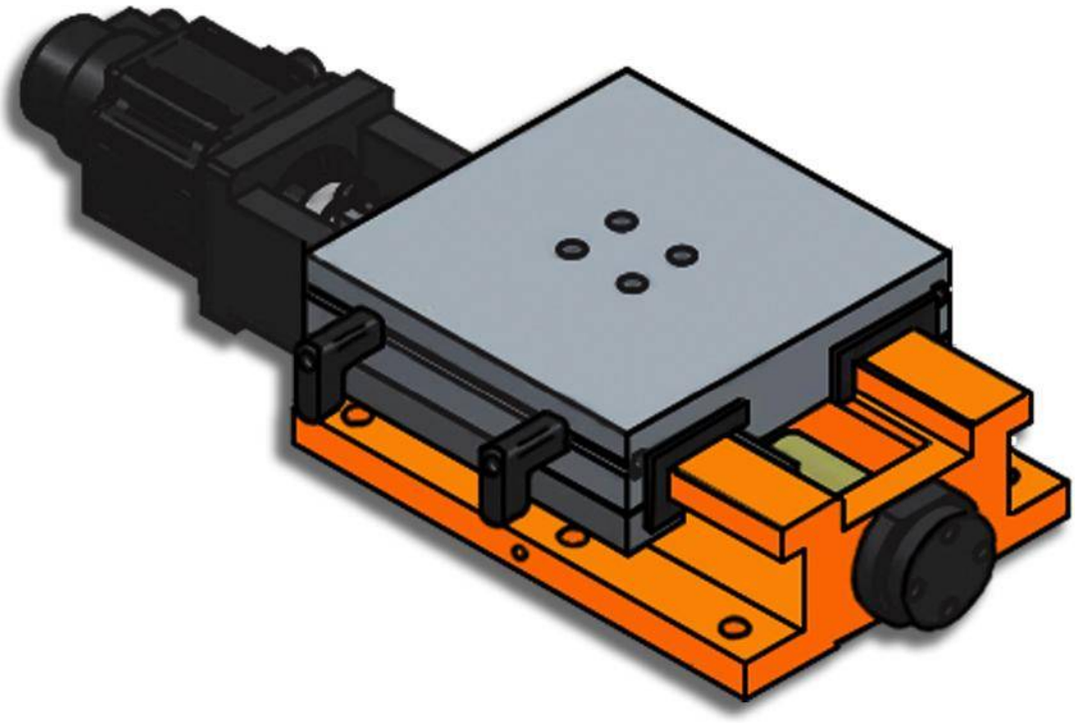

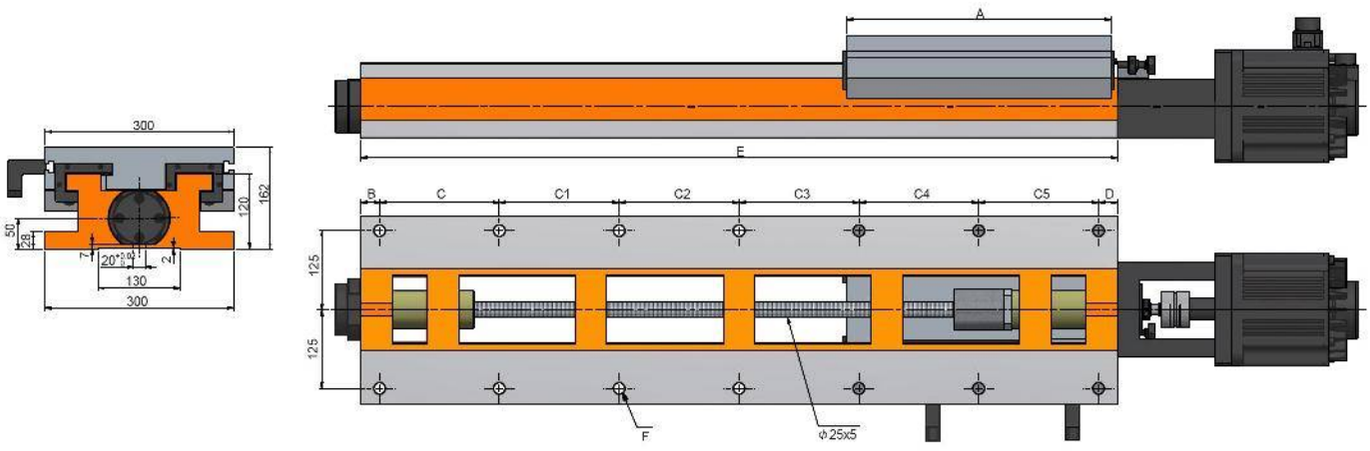
300
120
162
50
28
7
20
2
130
300
A
E
B
C
C1
C2
C3
C4
C5
D
125
125
F
Φ25x5

Characteristics & Dimensions

MODEL	BS300-420/800
Profile Width	*300.00*
A	*420.00*
B	*35.00*
C	*140.00*
C1	*140.00*
C2	*140.00*
C3	*140.00*
C4	*170.00*
C5	-
D	*35.00*
Profile Lenght	*800.00*
Lead Screw Pace	*360.00*
Total Stroke	*12 - Ø18*
System Total Weight (Kg)	*185.00*

**** Roundness ≤ 0.003 mm.*
***** All dimension are given in milimeters.*

BS300-420/940

Servo Slides With Hardeness Guideways & Ball Screw

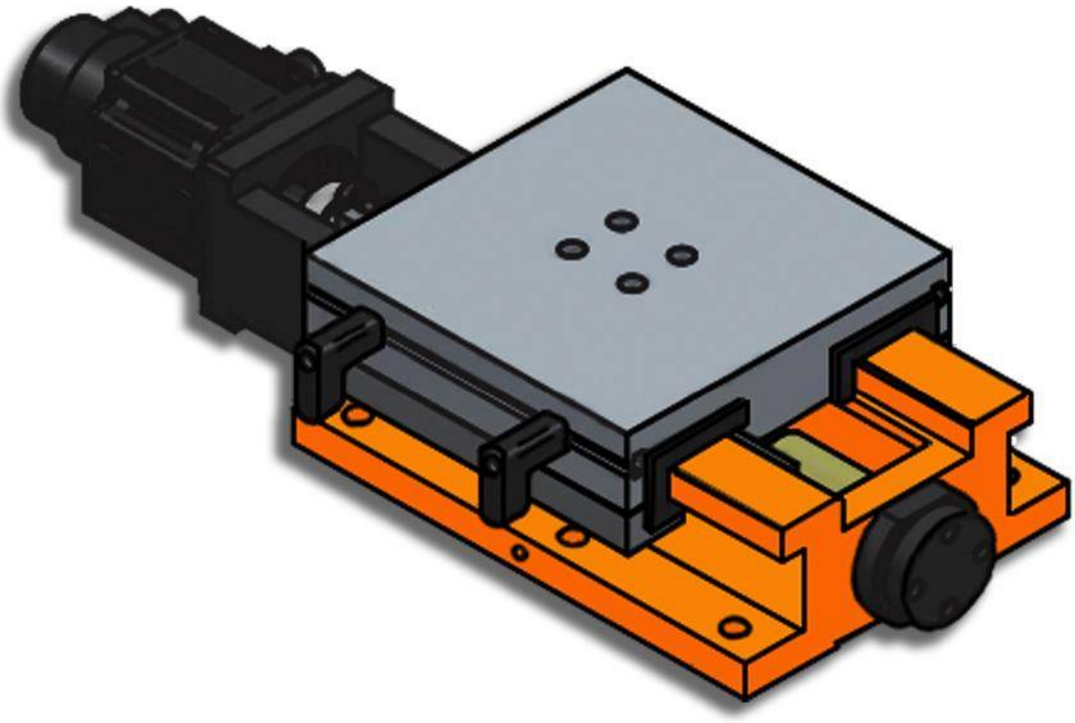

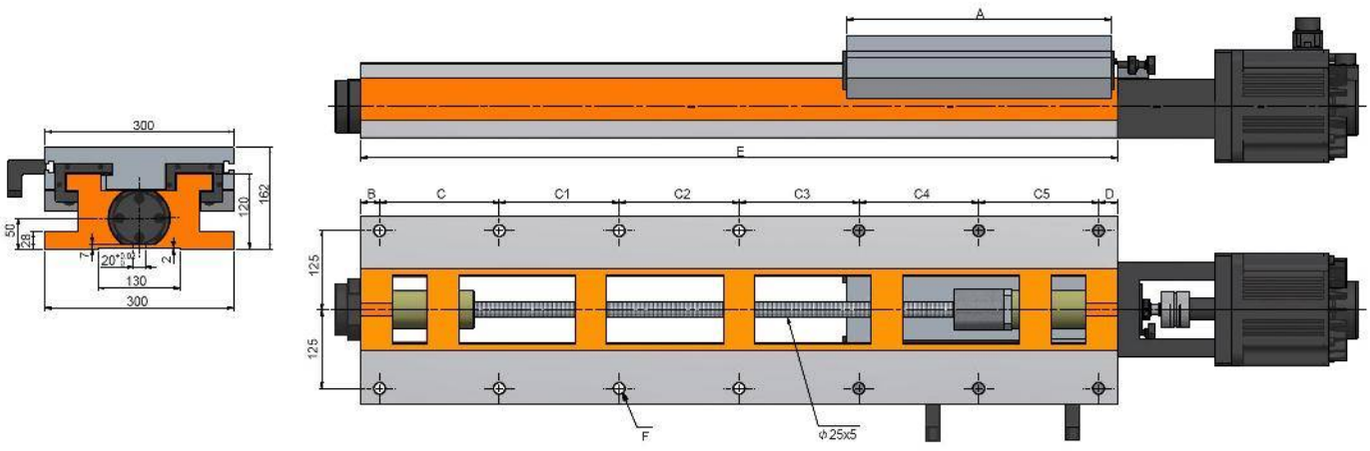
300
162
120
50
28
7
20
2
130
300
A
E
B
C
C1
C2
C3
C4
C5
D
125
125
F
Φ25x5

Characteristics & Dimensions

MODEL	BS300-420/940
Profile Width	*300.00*
A	*420.00*
B	*35.00*
C	*175.00*
C1	*175.00*
C2	*175.00*
C3	*175.00*
C4	*175.00*
C5	*-*
D	*30.00*
Profile Lenght	*940.00*
Lead Screw Pace	*500.00*
Total Stroke	*12 - Ø18*
System Total Weight (Kg)	*198.00*

***** Roundness ≤ 0.003 mm.*
****** All dimension are given in milimeters.*

BS300-420/1200

Servo Slides With Hardeness Guideways & Ball Screw

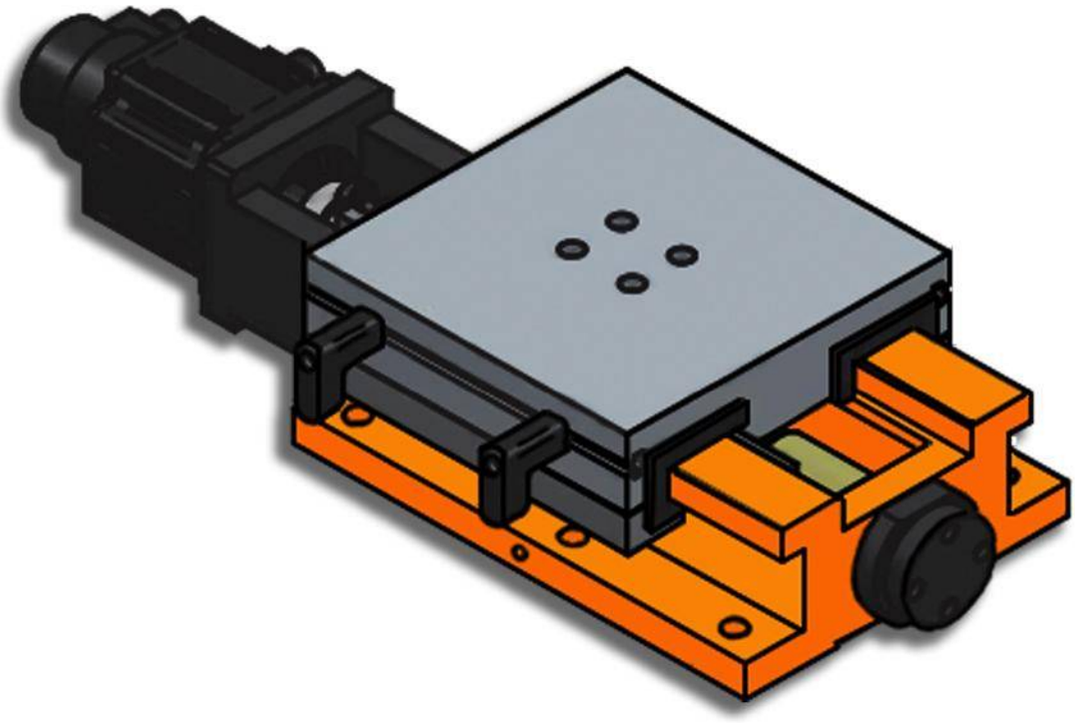

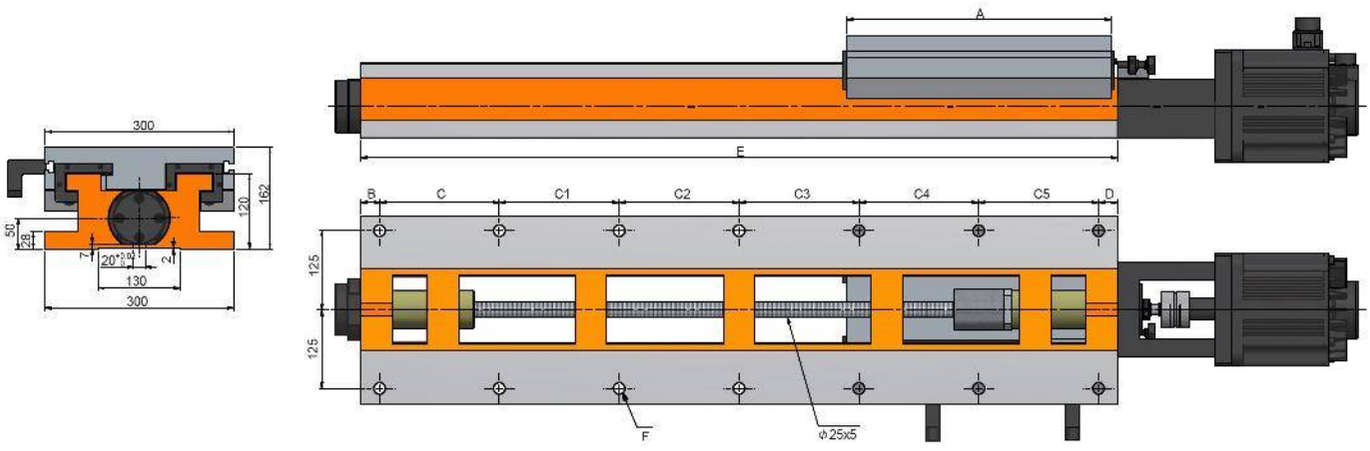
300
162
120
50
28
7
20
2
130
300
A
E
B
C
C1
C2
C3
C4
C5
D
125
125
F
Φ25x5

Characteristics & Dimensions

MODEL	BS300-420/1200
Profile Width	*300.00*
A	*420.00*
B	*30.00*
C	*190.00*
C1	*190.00*
C2	*190.00*
C3	*190.00*
C4	*190.00*
C5	*190.00*
D	*30.00*
Profile Lenght	*1,200.00*
Lead Screw Pace	*760.00*
Total Stroke	*14 - Ø18*
System Total Weight (Kg)	*210.00*

*** Roundness ≤ 0.003 mm.
**** All dimension are given in milimeters.

BS360-360/560

Servo Corredera Con Guías Templadas Y Tornillo Embalado

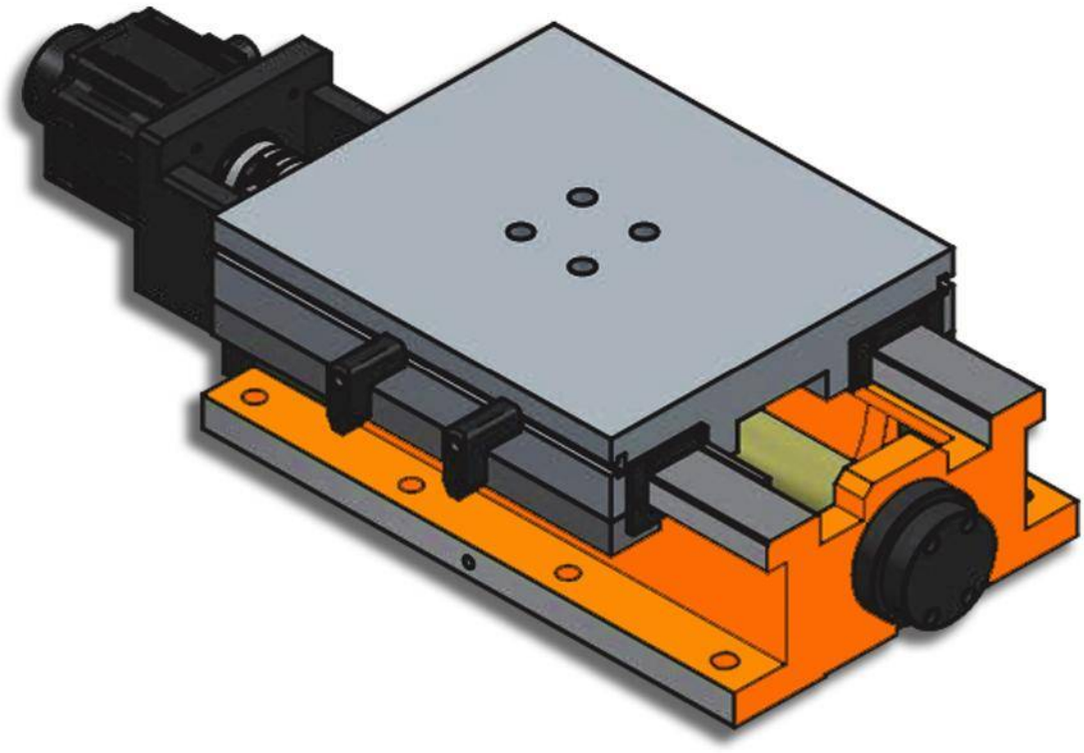

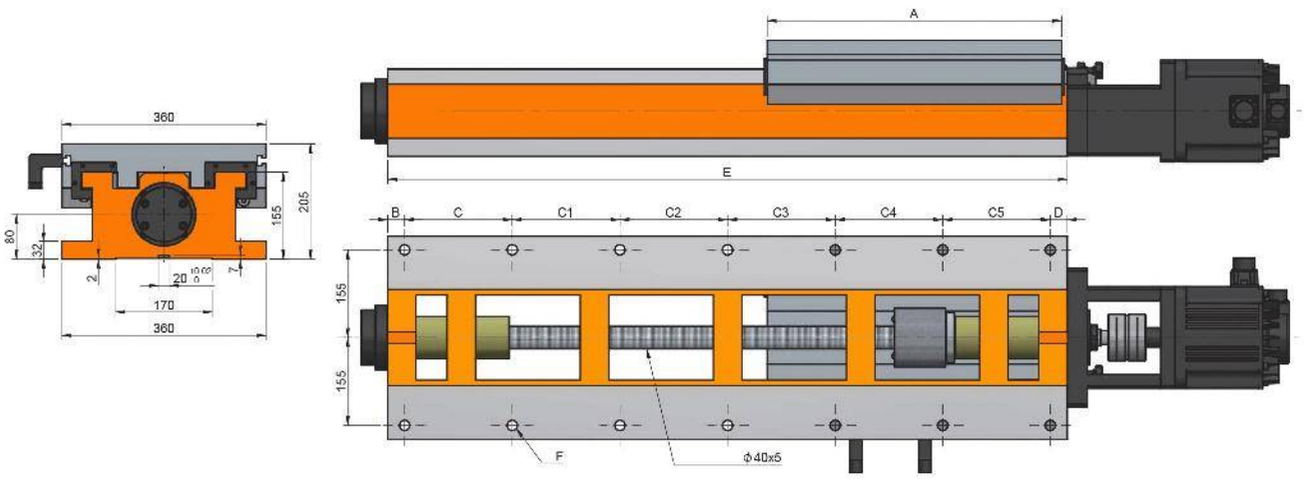
360
205
155
80
32
2
20
15
8
7
170
360
A
E
B
C
C1
C2
C3
C4
C5
D
155
155
F
Φ40x5

Characteristics & Dimensions

MODEL	BS360-360/560
Profile Width	*360.00*
A	*360.00*
B	*35.00*
C	*165.00*
C1	*165.00*
C2	*165.00*
C3	-
C4	-
C5	-
D	*30.00*
Profile Lenght	*560.00*
Lead Screw Pace	*8 - Ø18*
Total Stroke	*180.00*
System Total Weight (Kg)	*167.00*

*** Roundness ≤ 0.003 mm.
***** All dimension are given in milimeters.

BS360-420/560

Servo Slides With Hardeness Guideways & Ball Screw

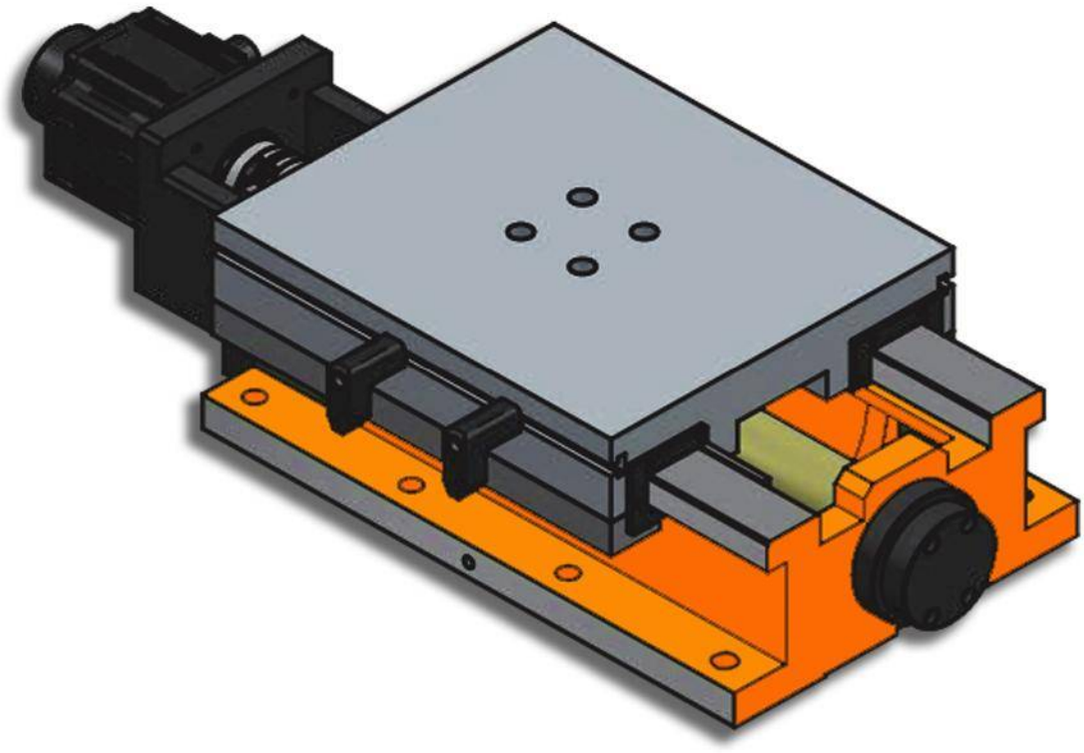

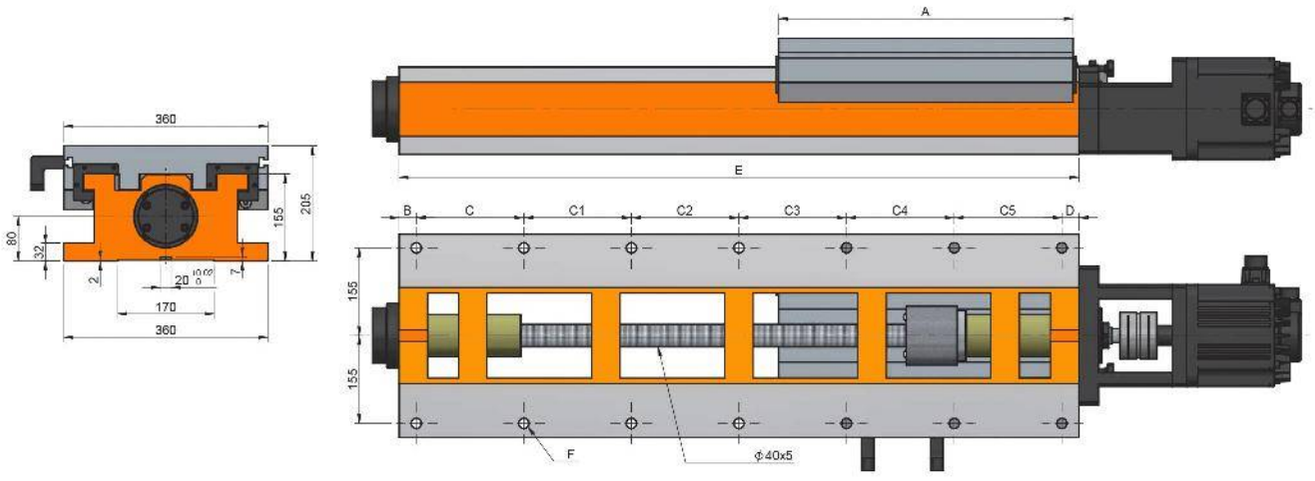
A
E
B
C
C1
C2
C3
C4
C5
D
360
205
155
80
32
2
20
7
170
360
155
155
F
ϕ40x5

Characteristics & Dimensions

MODEL	BS360-420/560
Ancho Del Perfil	*360.00*
A	*420.00*
B	*35.00*
C	*165.00*
C1	*165.00*
C2	*165.00*
C3	-
C4	-
C5	-
D	*30.00*
Longitud Del Perfil	*560.00*
Paso Del Tornillo Patrón	*8 - Ø18*
Carrera Total	*120.00*
Peso Total Del Sistema (Kg)	*171.00*

***** Roundness ≤ 0.003 mm.*
****** All dimension are given in milimeters.*

BS360-420/670

Servo Slides With Hardeness Guideways & Ball Screw

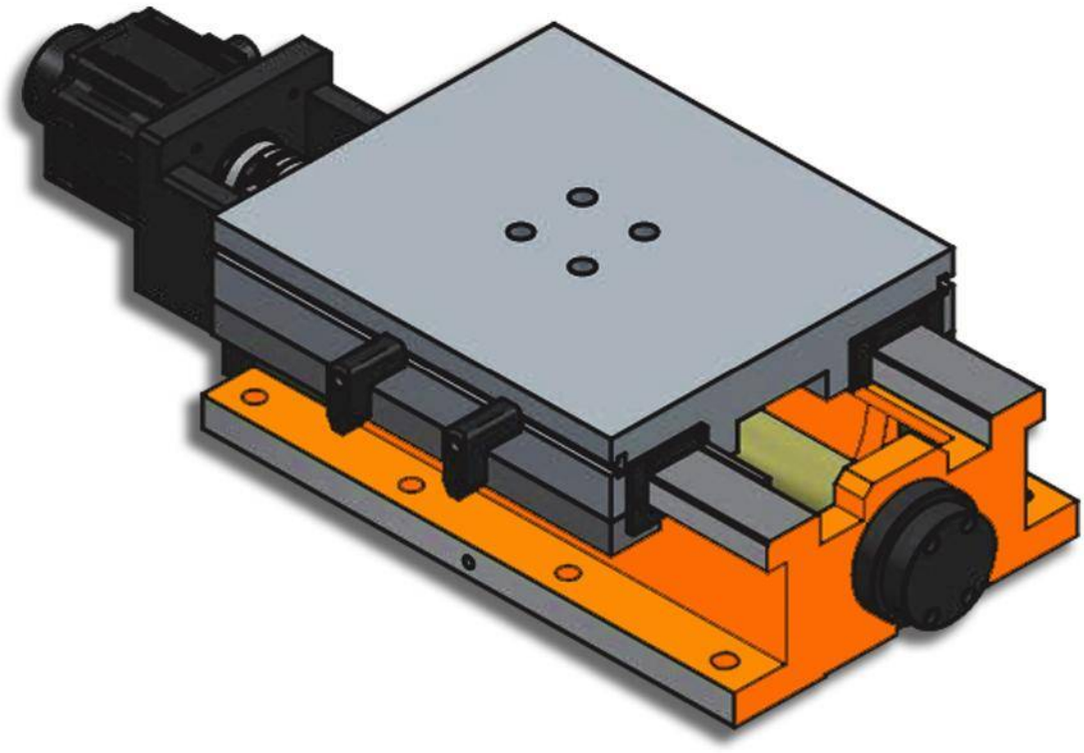

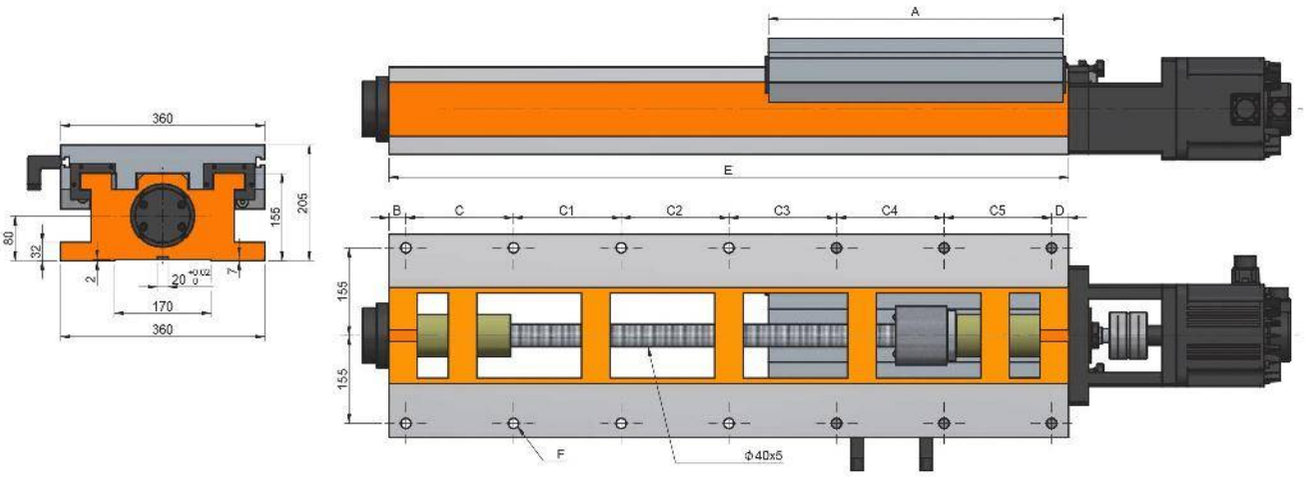
A
E
B
C
C1
C2
C3
C4
C5
D
360
205
155
80
32
2
7
20
170
360
155
155
F
Φ40x5

Characteristics & Dimensions

MODEL	BS360-420/670
Profile Width	*360.00*
A	*420.00*
B	*35.00*
C	*140.00*
C1	*140.00*
C2	*140.00*
C3	*180.00*
C4	*-*
C5	*-*
D	*35.00*
Profile Lenght	*670.00*
Lead Screw Pace	*10 - Ø18*
Total Stroke	*230.00*
System Total Weight (Kg)	*192.00*

***** Roundness ≤ 0.003 mm.*
****** All dimension are given in milimeters.*

BS360-420/800

Servo Slides With Hardeness Guideways & Ball Screw

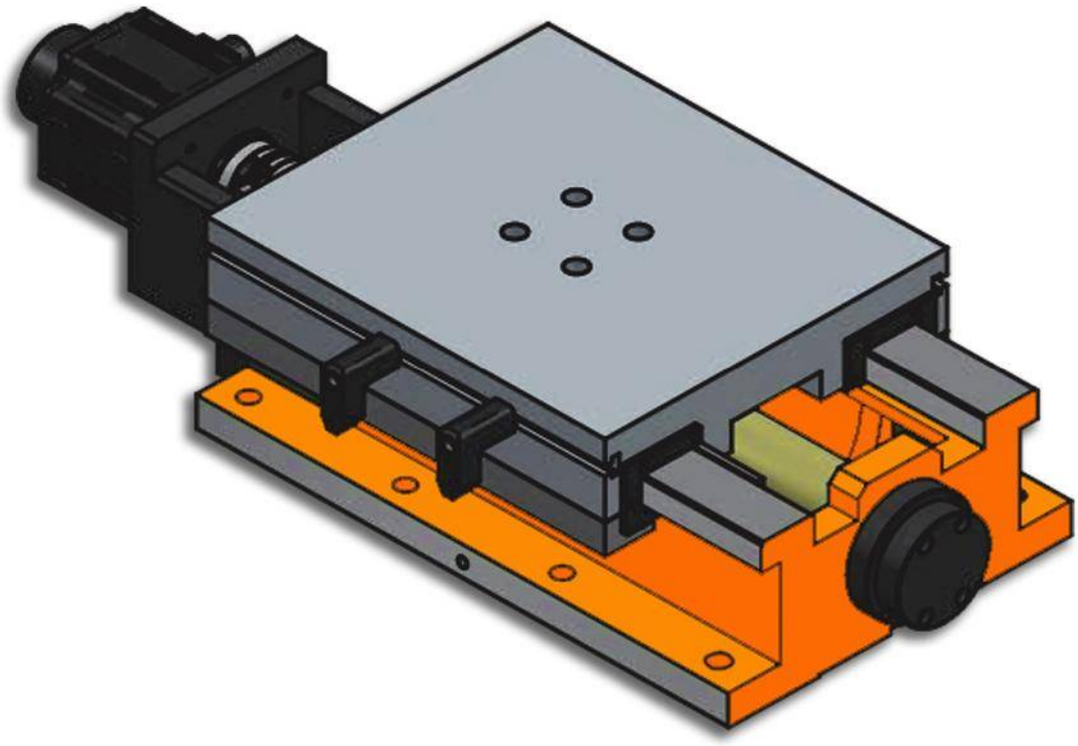

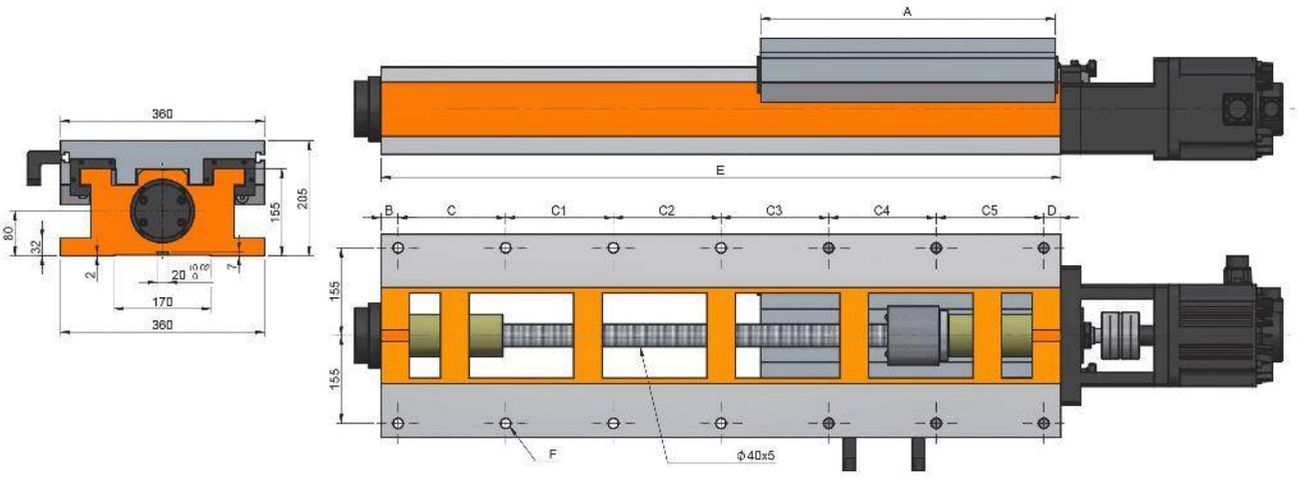
360
205
155
80
32
2
20
7
170
360
A
E
B
C
C1
C2
C3
C4
C5
D
155
155
F
Φ40x5

Characteristics & Dimensions

MODEL	BS360-420/800
Profile Width	*360.00*
A	*420.00*
B	*35.00*
C	*140.00*
C1	*140.00*
C2	*140.00*
C3	*140.00*
C4	*170.00*
C5	*-*
D	*35.00*
Profile Lenght	*800.00*
Lead Screw Pace	*12 - Ø18*
Total Stroke	*360.00*
System Total Weight (Kg)	*207.00*

***** Roundness ≤ 0.003 mm.*
****** All dimension are given in milimeters.*

BS360-520/800

Servo Slides With Hardeness Guideways & Ball Screw

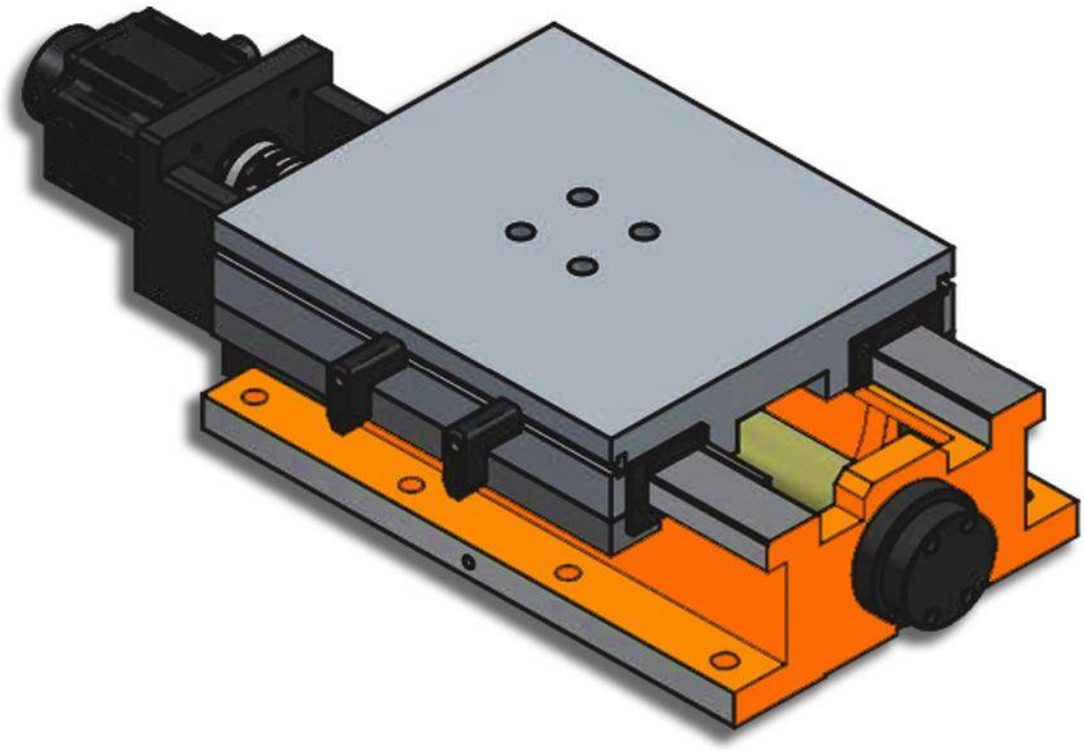

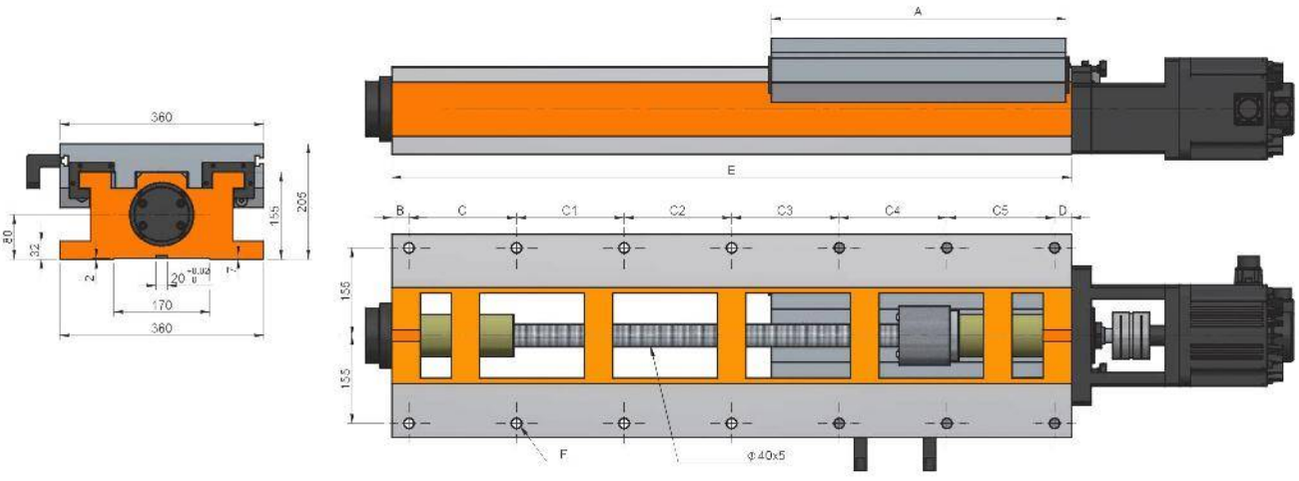
360
80
32
2
20
7
170
360
155
205
A
E
B
C
C1
C2
C3
C4
C5
D
155
155
F
Φ40x5

Characteristics & Dimensions

MODEL	BS360-520/800
Profile Width	*360.00*
A	*520.00*
B	*35.00*
C	*140.00*
C1	*140.00*
C2	*140.00*
C3	*140.00*
C4	*170.00*
C5	*-*
D	*35.00*
Profile Lenght	*800.00*
Lead Screw Pace	*12 - Ø18*
Total Stroke	*260.00*
System Total Weight (Kg)	*212.00*

***** Roundness ≤ 0.003 mm.*
****** All dimension are given in milimeters.*

BS360-520/940

Servo Slides With Hardeness Guideways & Ball Screw

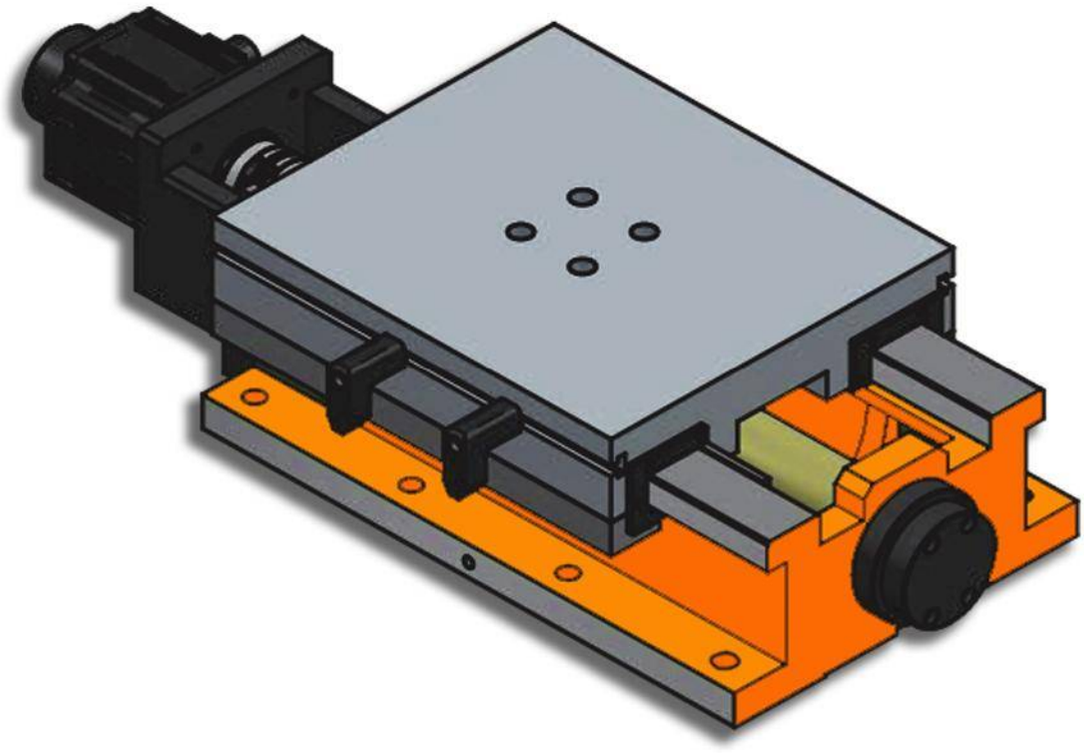

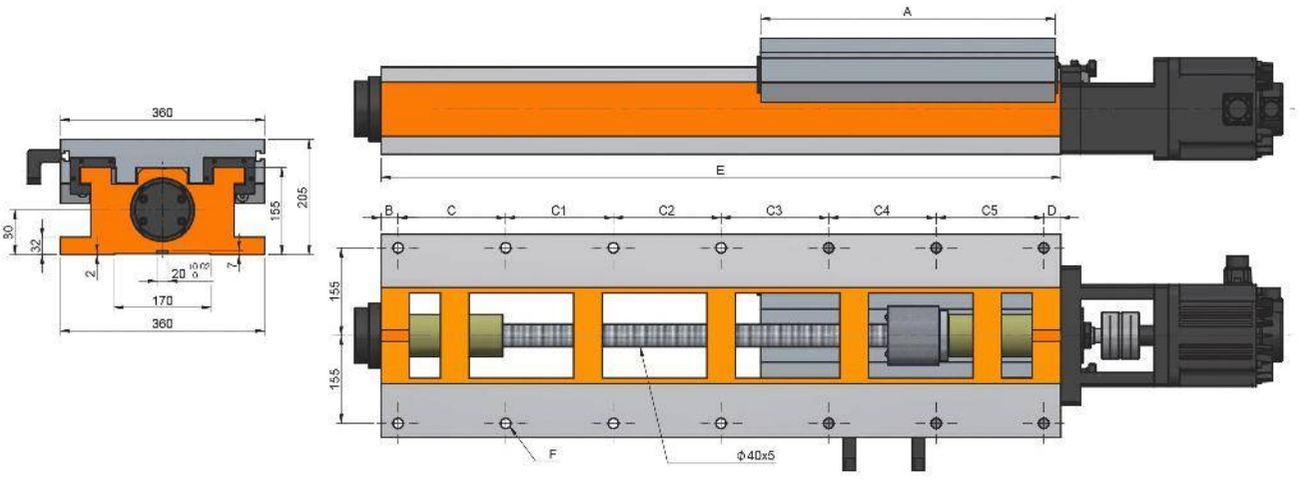
A
E
360
205
155
30
32
2
20
7
170
360
B
C
C1
C2
C3
C4
C5
D
155
155
F
Φ40x5

Characteristics & Dimensions

MODEL	BS360-520/940
Profile Width	*360.00*
A	*530.00*
B	*35.00*
C	*175.00*
C1	*175.00*
C2	*175.00*
C3	*175.00*
C4	*175.00*
C5	*-*
D	*30.00*
Profile Lenght	*940.00*
Lead Screw Pace	*12 - Ø18*
Total Stroke	*400.00*
System Total Weight (Kg)	*227.00*

***** Roundness ≤ 0.003 mm.*
****** All dimension are given in milimeters.*

BS360-600/1200

Servo Slides With Hardeness Guideways & Ball Screw

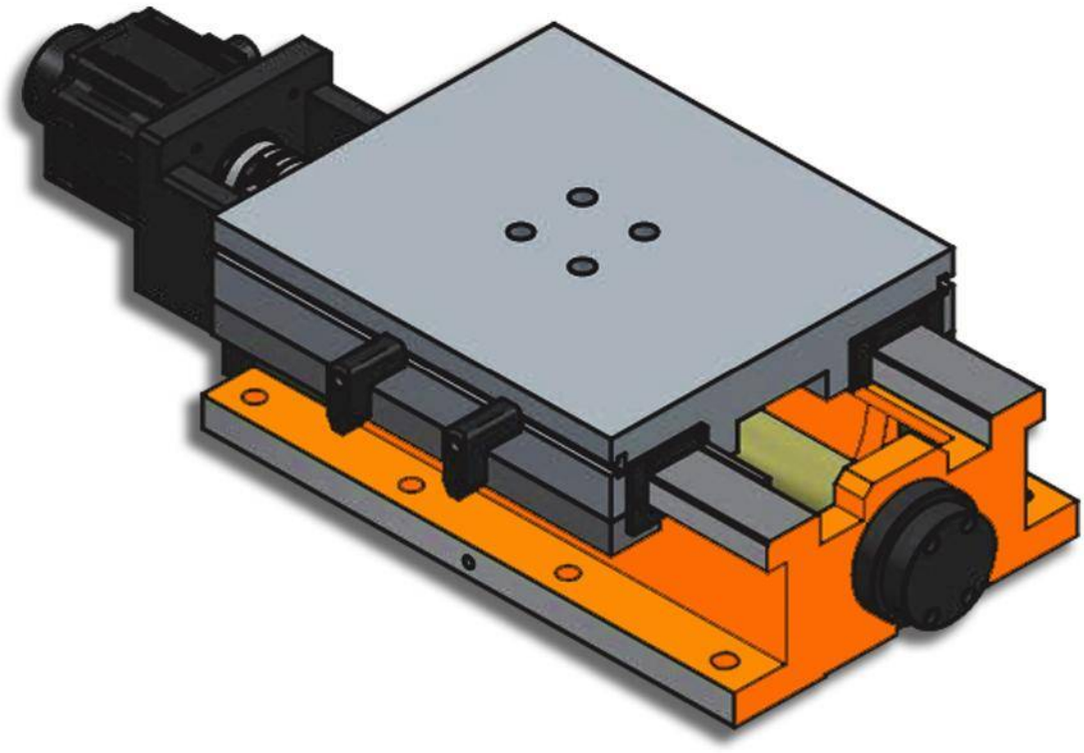

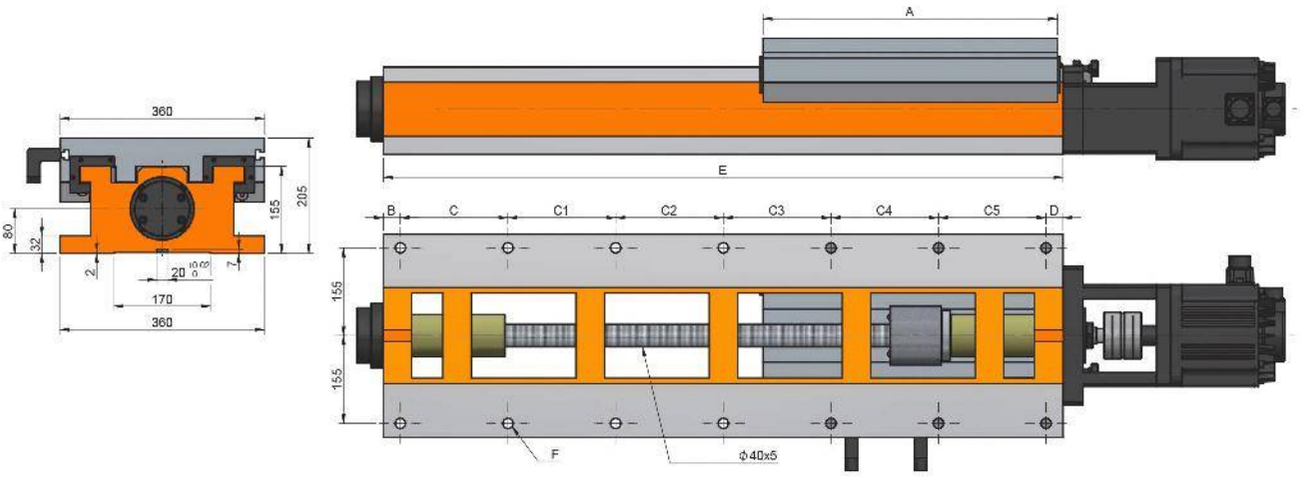
360
205
155
80
32
2
20
7
170
360
A
E
B
C
C1
C2
C3
C4
C5
D
155
155
F
Φ40x5

Characteristics & Dimensions

MODEL	BS360-600/1200
Profile Width	*360.00*
A	*600.00*
B	*30.00*
C	*190.00*
C1	*190.00*
C2	*190.00*
C3	*190.00*
C4	*190.00*
C5	*190.00*
D	*30.00*
Profile Lenght	*1,200.00*
Lead Screw Pace	*14 - Ø18*
Total Stroke	*580.00*
System Total Weight (Kg)	*273.00*

***** Roundness ≤ 0.003 mm.*
****** All dimension are given in milimeters.*

BS420-420/560

Servo Slides With Hardeness Guideways & Ball Screw

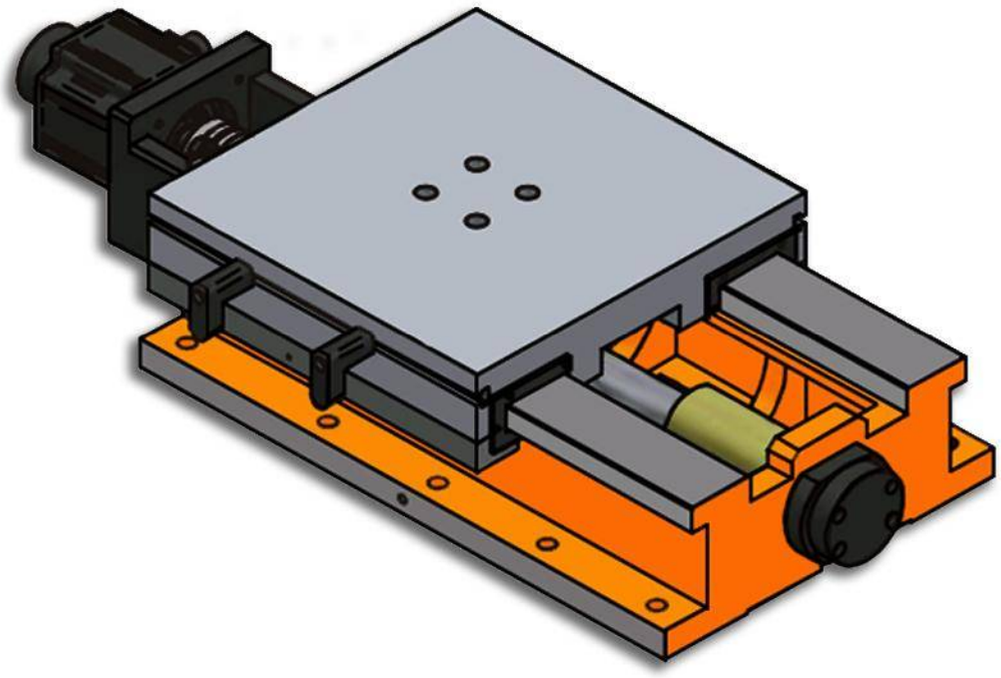

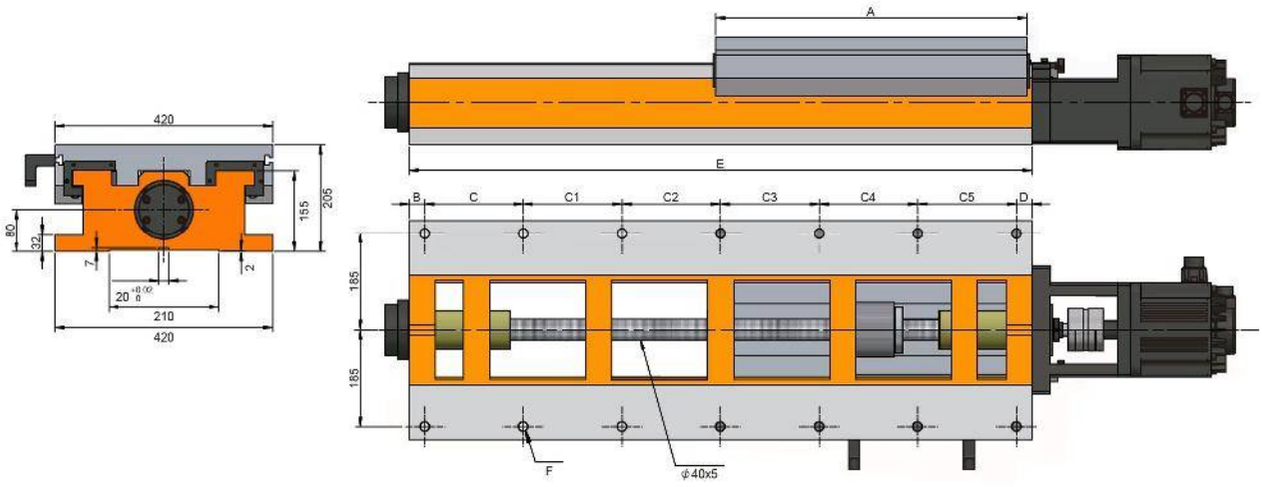
A
E
B
C
C1
C2
C3
C4
C5
D
420
155
205
80
32
Z
2
20
210
420
185
185
F
φ40x5

Characteristics & Dimensions

MODEL	BS420-420/560
Profile Width	*420.00*
A	*420.00*
B	*35.00*
C	*165.00*
C1	*165.00*
C2	*165.00*
C3	-
C4	-
C5	-
D	*30.00*
Profile Lenght	*560.00*
Lead Screw Pace	*8 - Ø18*
Total Stroke	*120.00*
System Total Weight (Kg)	*221.00*

***** Roundness ≤ 0.003 mm.*
****** All dimension are given in milimeters.*

BS420-420/670

Servo Slides With Hardeness Guideways & Ball Screw

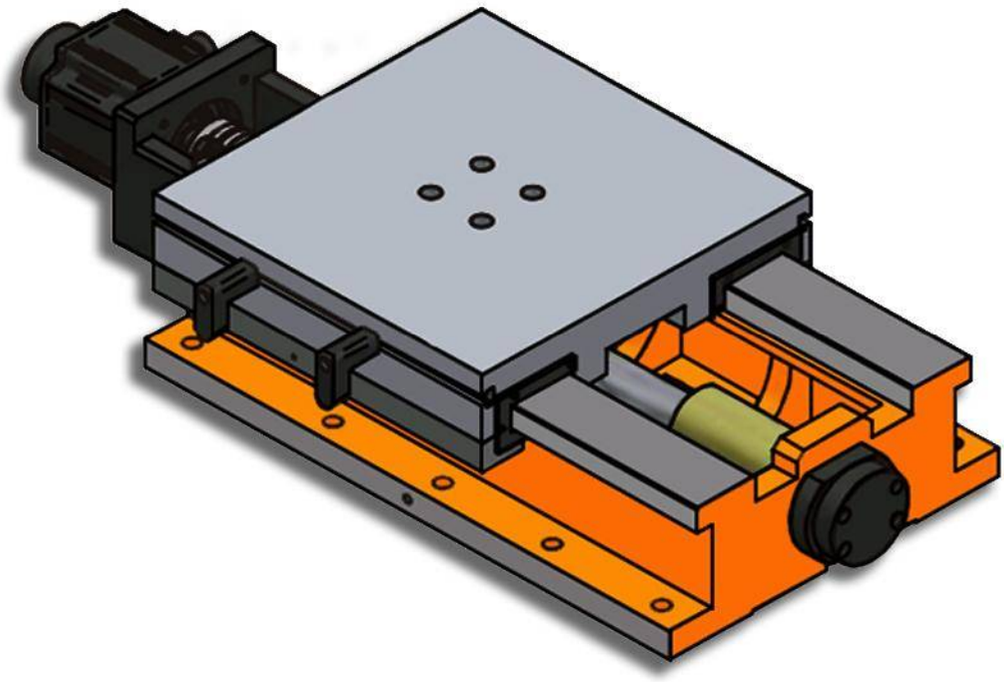

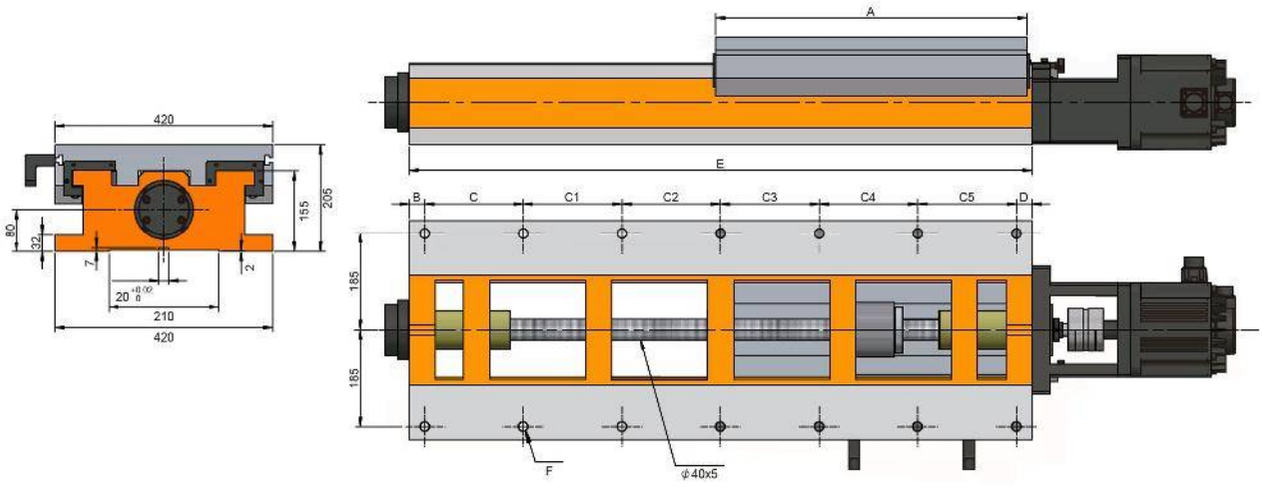
A
E
B
C
C1
C2
C3
C4
C5
D
420
155
205
80
32
Z
2
20
210
420
185
185
F
φ40x5

Characteristics & Dimensions

MODEL	BS420-420/670
Profile Width	*420.00*
A	*420.00*
B	*35.00*
C	*140.00*
C1	*140.00*
C2	*140.00*
C3	*180.00*
C4	*-*
C5	*-*
D	*35.00*
Profile Lenght	*670.00*
Lead Screw Pace	*10 - Ø18*
Total Stroke	*230.00*
System Total Weight (Kg)	*230.00*

***** Roundness ≤ 0.003 mm.*
****** All dimension are given in milimeters.*

BS420-520/940

Servo Slides With Hardeness Guideways & Ball Screw

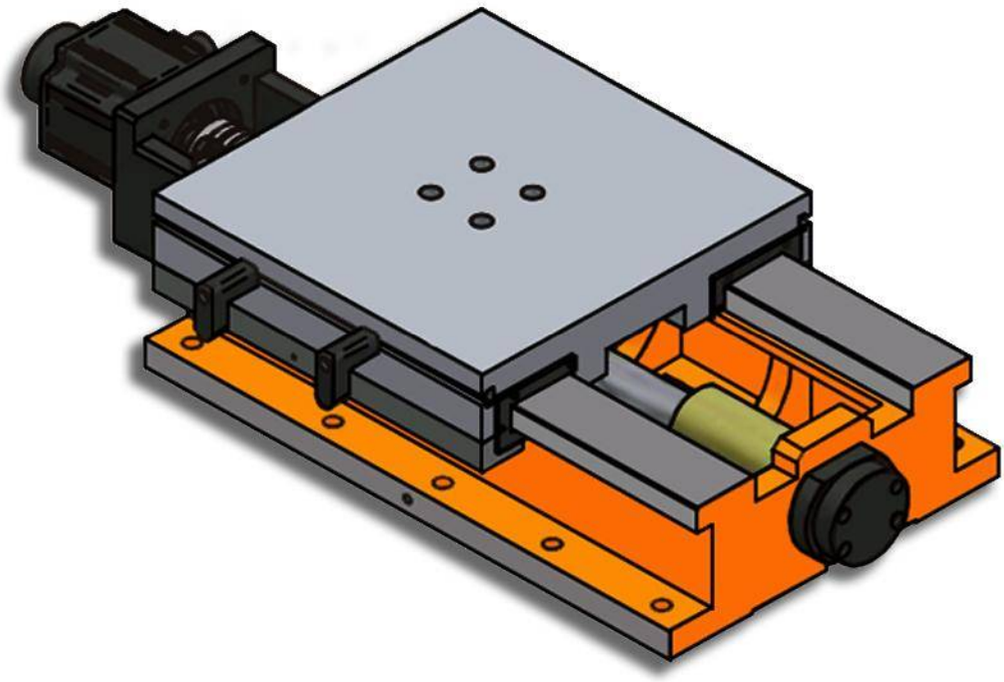

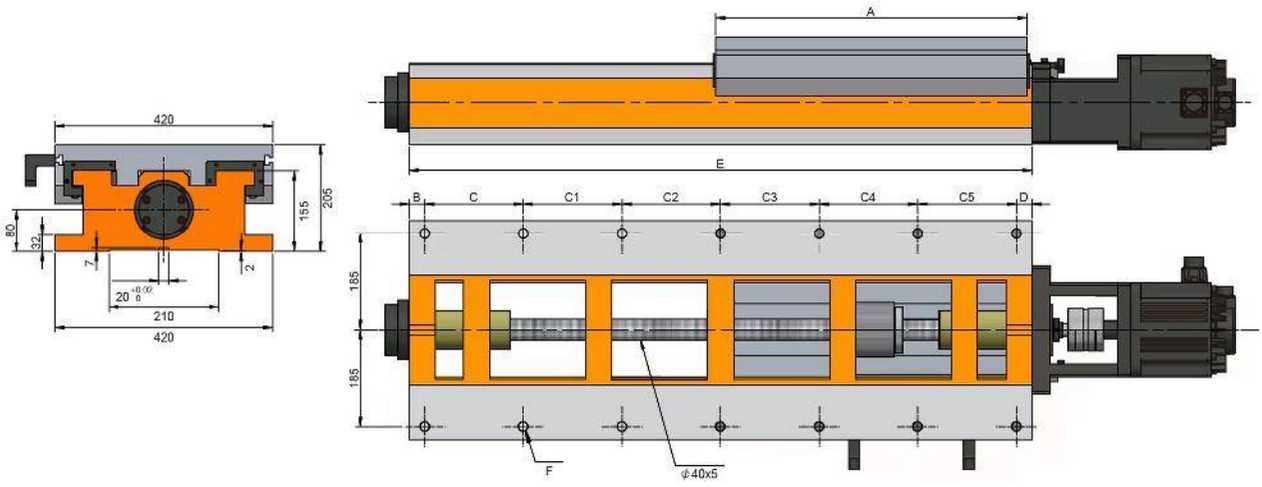
A
E
B
C
C1
C2
C3
C4
C5
D
420
155
205
80
32
Z
2
20
210
420
185
185
F
φ40x5

Characteristics & Dimensions

MODEL	BS420-520/940
Profile Width	*420.00*
A	*520.00*
B	*35.00*
C	*175.00*
C1	*175.00*
C2	*175.00*
C3	*175.00*
C4	*175.00*
C5	*-*
D	*30.00*
Profile Lenght	*940.00*
Lead Screw Pace	*12 - Ø18*
Total Stroke	*400.00*
System Total Weight (Kg)	*292.00*

***** Roundness ≤ 0.003 mm.*
****** All dimension are given in milimeters.*

BS420-600/1200

Servo Slides With Hardeness Guideways & Ball Screw

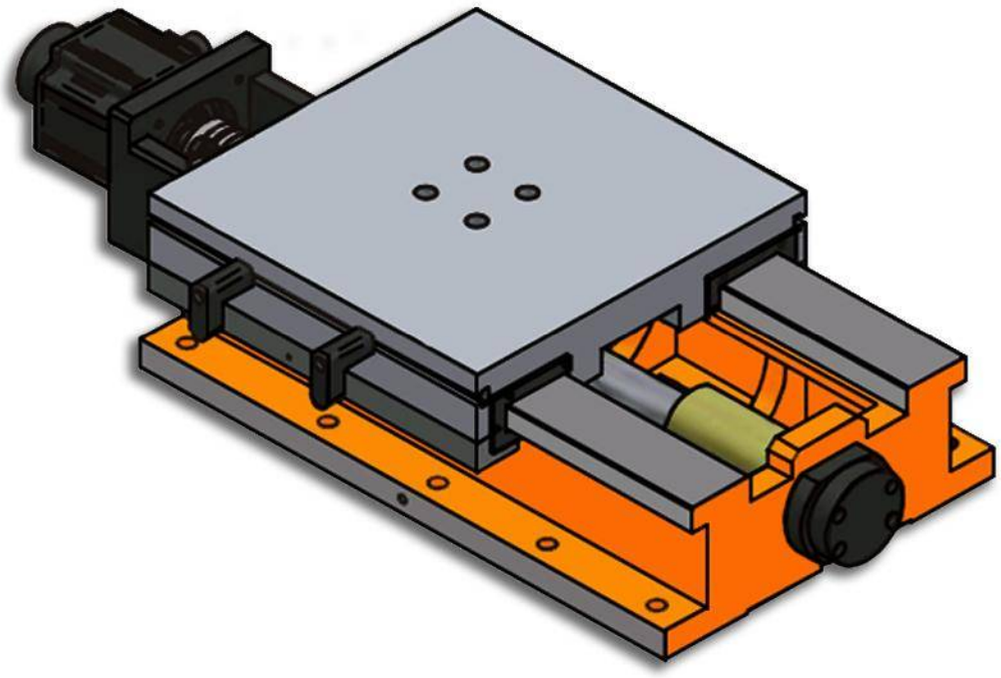

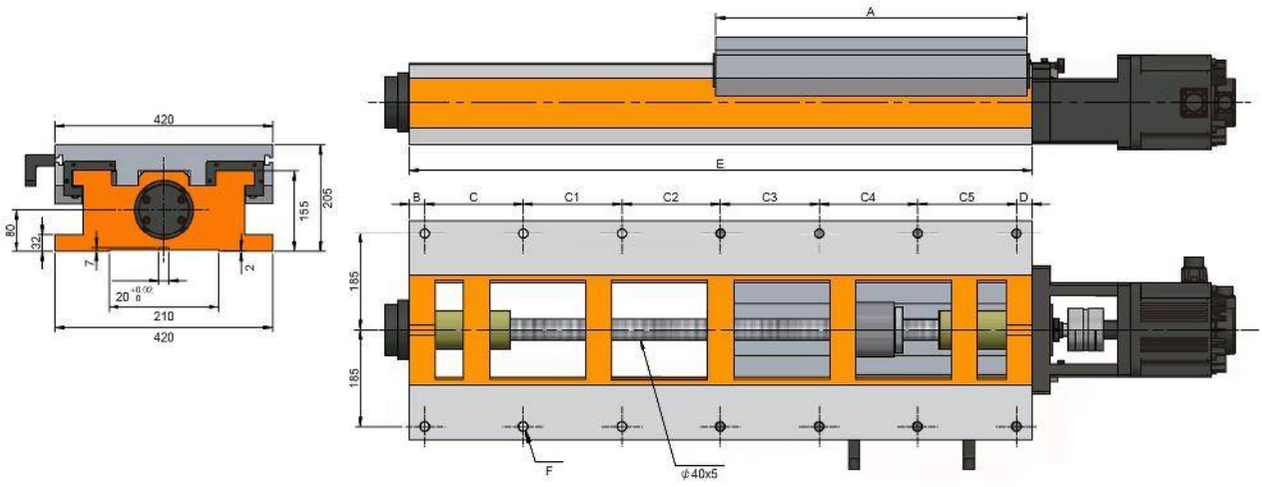
A
E
B
C
C1
C2
C3
C4
C5
D
420
155
205
80
32
Z
2
20 +0.05 0
210
420
185
185
F
φ40x5

Characteristics & Dimensions

MODEL	BS420-600/1200
Profile Width	*420.00*
A	*600.00*
B	*30.00*
C	*190.00*
C1	*190.00*
C2	*190.00*
C3	*190.00*
C4	*190.00*
C5	*190.00*
D	*30.00*
Profile Lenght	*1,200.00*
Lead Screw Pace	*14 - Ø18*
Total Stroke	*580.00*
System Total Weight (Kg)	*323.00*

***** Roundness ≤ 0.003 mm.*
****** All dimension are given in milimeters.*

BS500-520/885

Servo Slides With Hardeness Guideways & Ball Screw

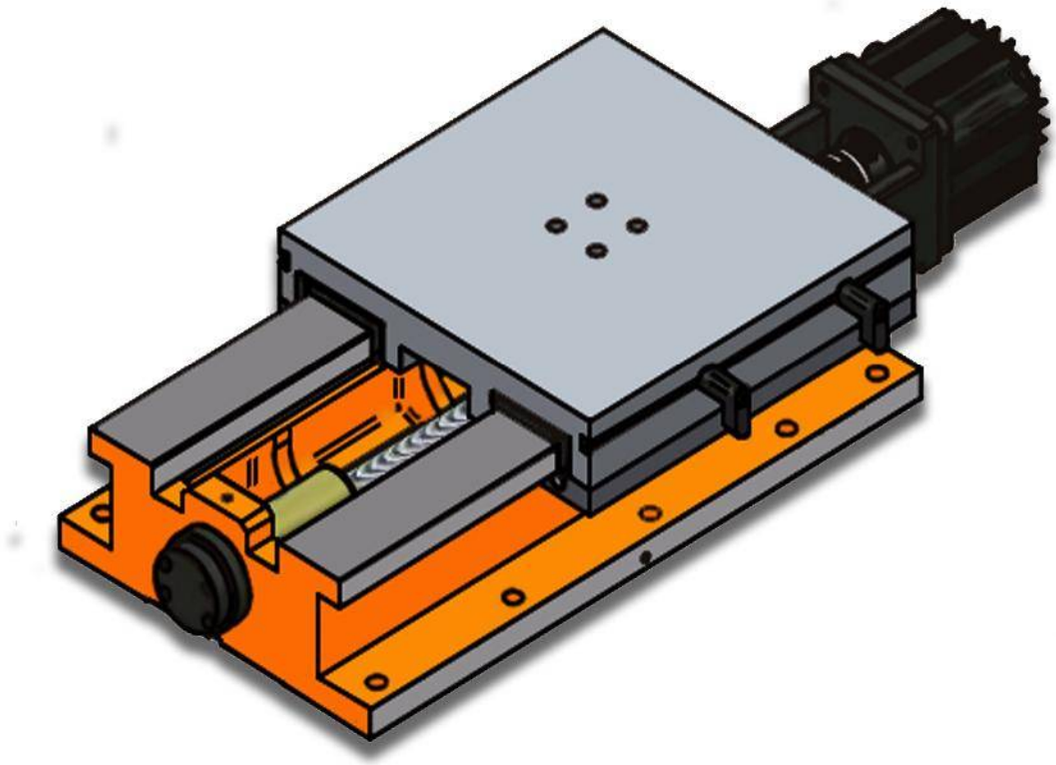

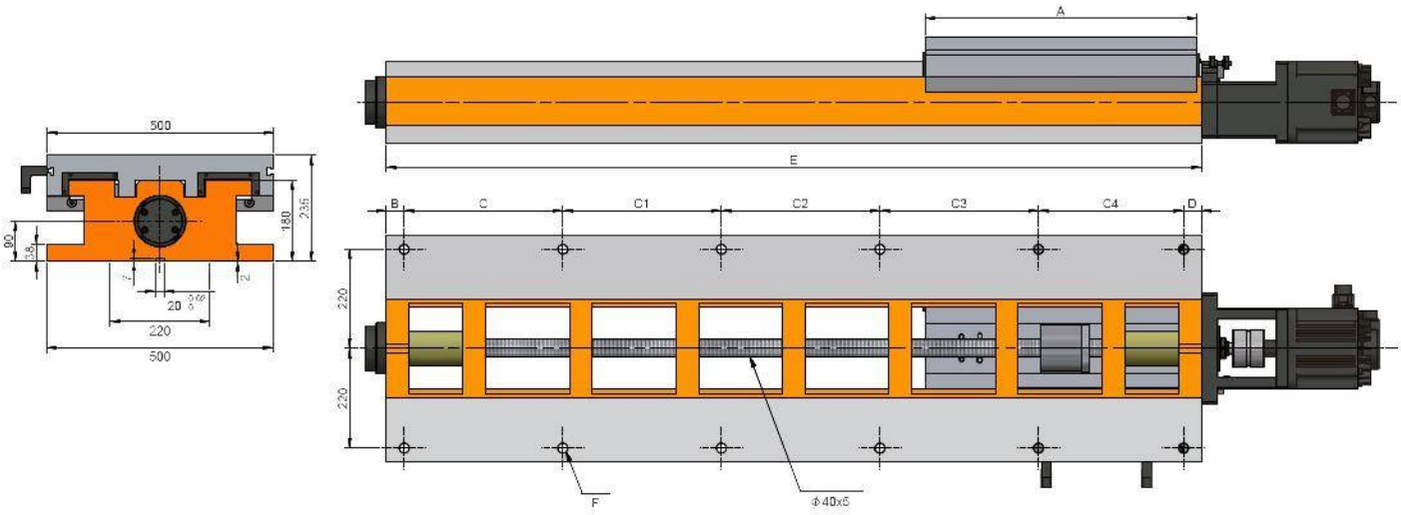
A
E
B
C
C1
C2
C3
C4
D
500
235
180
90
18
20
220
500
220
220
F
Φ40x5

Characteristics & Dimensions

MODEL	BS500-520/885
Profile Width	*500.00*
A	*520.00*
B	*40.00*
C	*220.00*
C1	*220.00*
C2	*220.00*
C3	*142.00*
C4	-
C5	-
D	*40.00*
Profile Lenght	*885.00*
Lead Screw Pace	*10 - Ø18*
Total Stroke	*345.00*
System Total Weight (Kg)	*422.00*

*** Roundness ≤ 0.003 mm.
**** All dimension are given in milimeters.

BS500-600/1200

Servo Corredera Con Guías Templadas y Tornillo Embalado

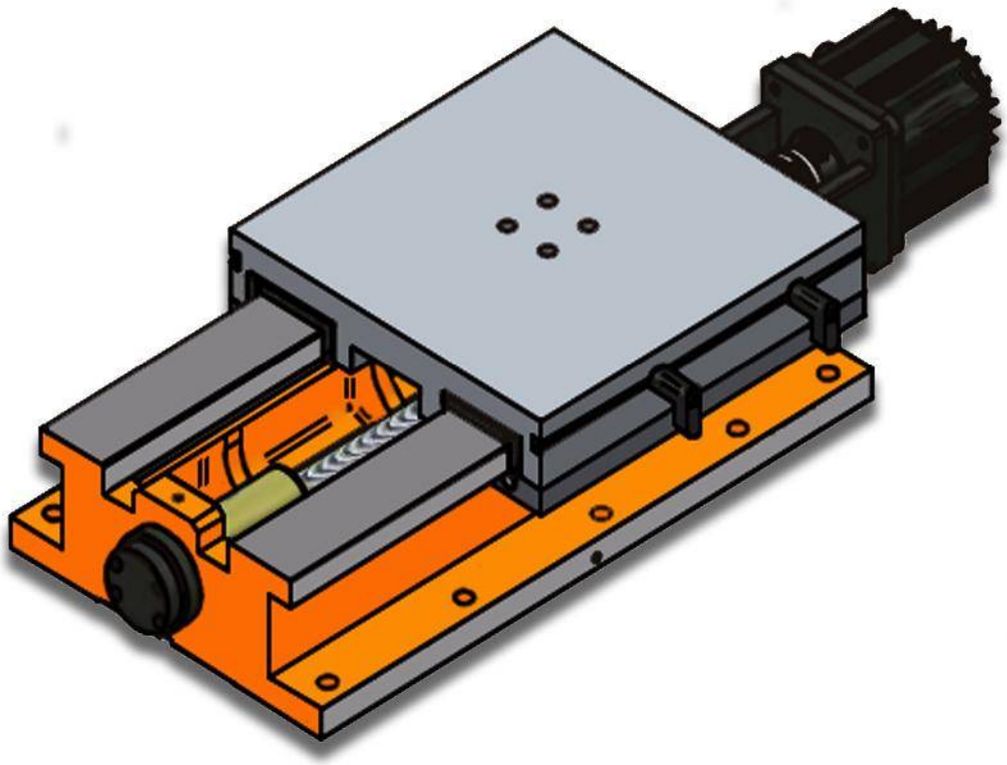

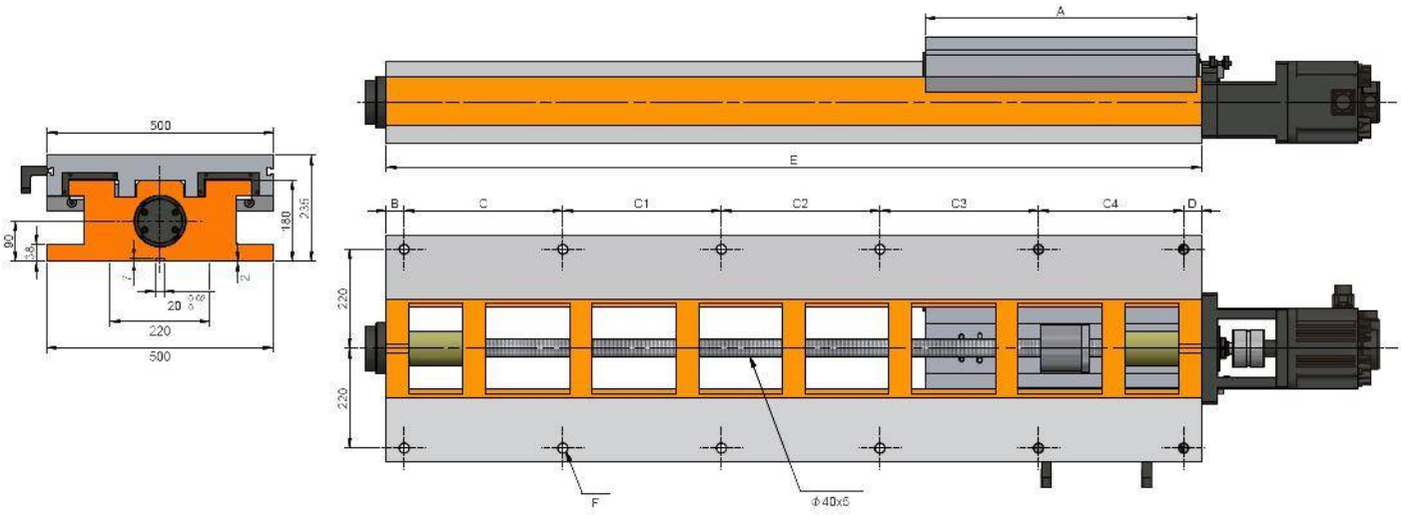
500
235
180
90
18
20
220
500
A
E
B
C
C1
C2
C3
C4
D
220
220
F
Φ40x5

Characteristics & Dimensions

MODEL	BS500-600/1200
Profile Width	*500.00*
A	*600.00*
B	*40.00*
C	*220.00*
C1	*220.00*
C2	*220.00*
C3	*220.00*
C4	*240.00*
C5	-
D	*40.00*
Profile Lenght	*1,200.00*
Lead Screw Pace	*12 - Ø18*
Total Stroke	*580.00*
System Total Weight (Kg)	*515.00*

***** Roundness ≤ 0.003 mm.*
****** All dimension are given in milimeters.*

BS500-600/1800

Servo Corredera Con Guías Templadas y Tornillo Embalado

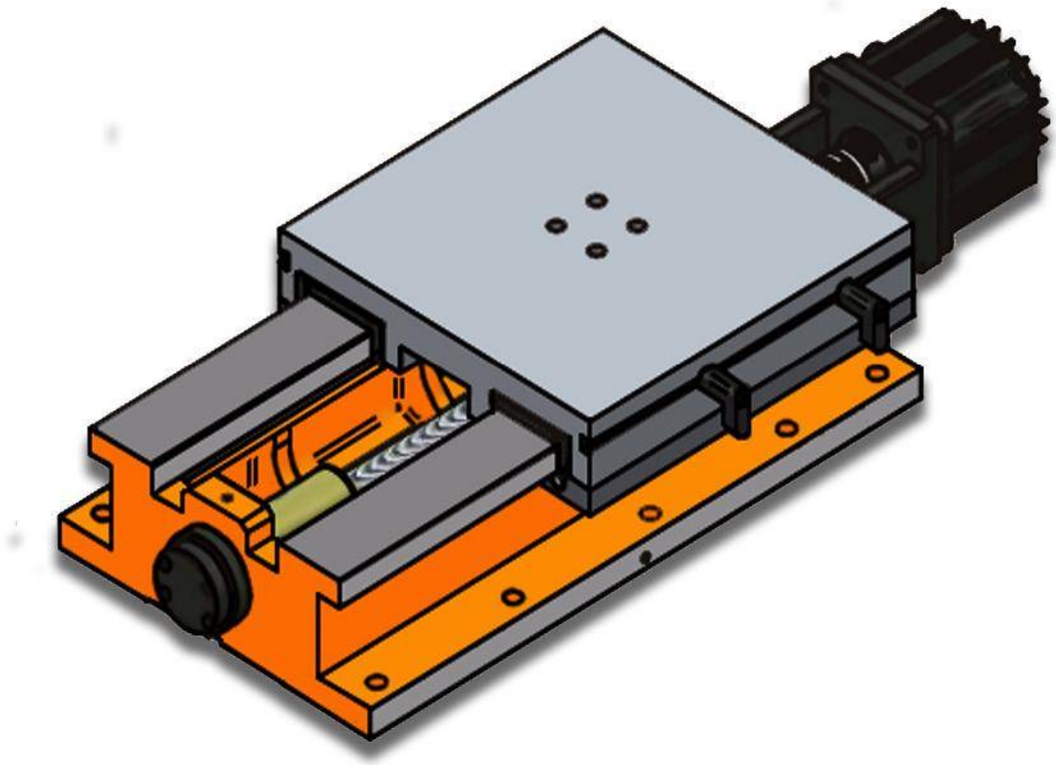

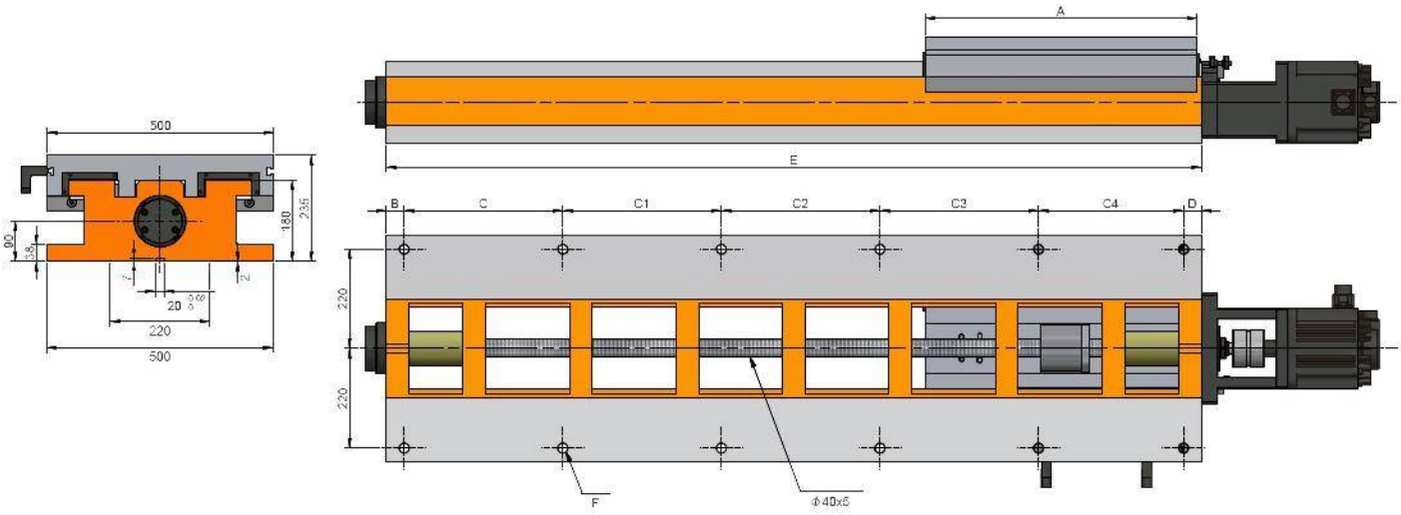
500
180
235
90
38
20
220
500
A
E
B
C
C1
C2
C3
C4
D
220
220
F
Φ40x5

Characteristics & Dimensions

MODEL	BS500-600/1800
Profile Width	*500.00*
A	*600.00*
B	*40.00*
C	*350.00*
C1	*350.00*
C2	*350.00*
C3	*350.00*
C4	*320.00*
C5	*-*
D	*40.00*
Profile Lenght	*1,800.00*
Lead Screw Pace	*12 - Ø18*
Total Stroke	*1,180.00*
System Total Weight (Kg)	*655.00*

*** Roundness ≤ 0.003 mm.
**** All dimension are given in milimeters.

BS600-520/885

Servo Slides With Hardeness Guideways & Ball Screw

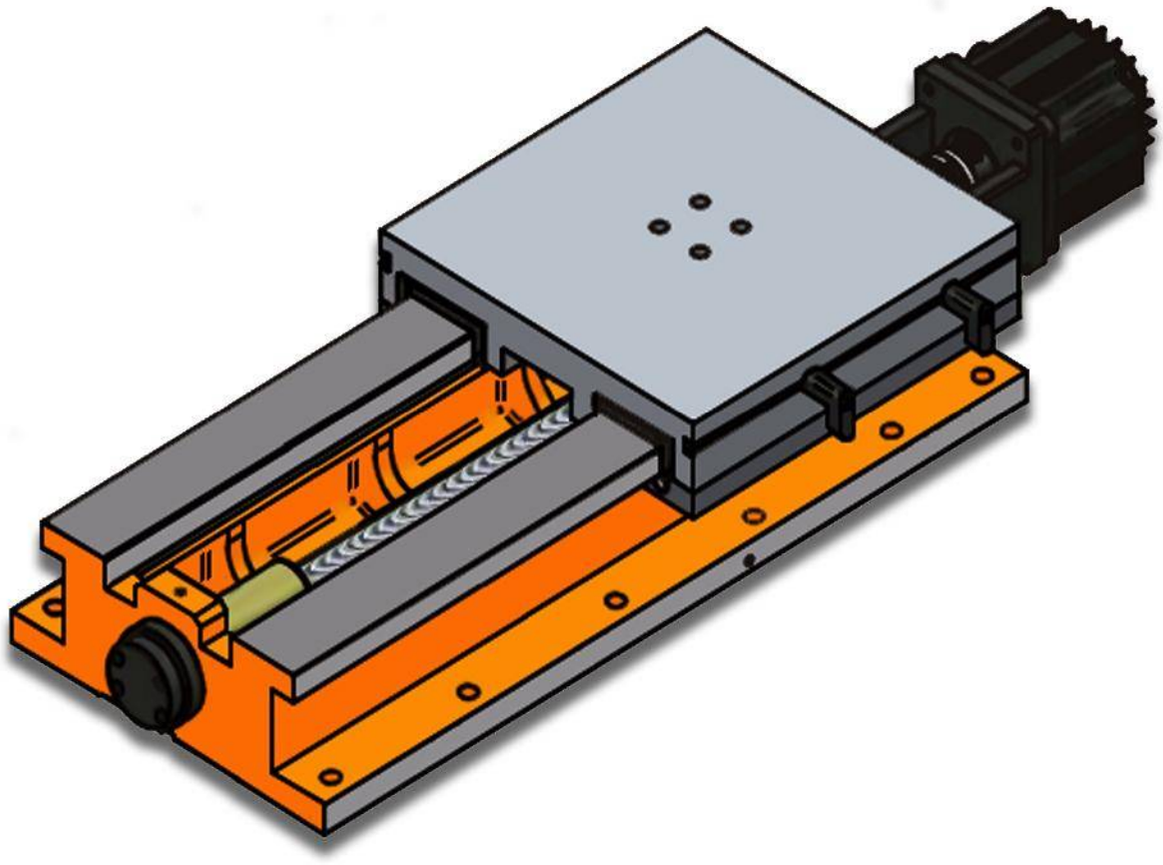

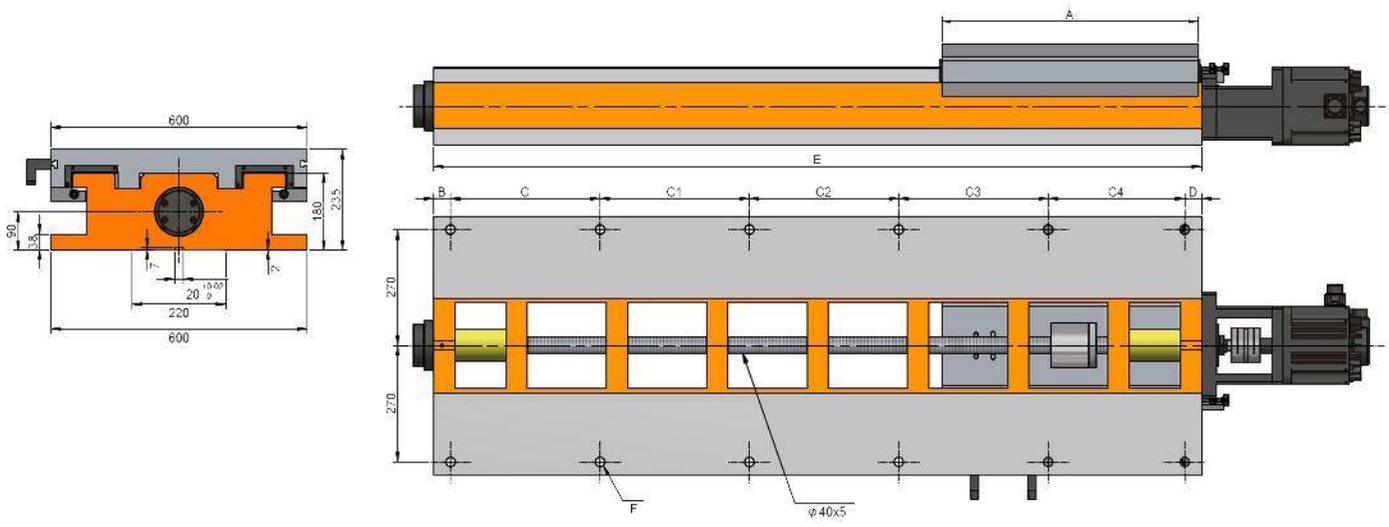
600
180
235
90
35
7
20
220
600
A
E
B
C
C1
C2
C3
C4
D
270
270
F
φ40x5

Characteristics & Dimensions

MODEL	BS600-520/885
Ancho Del Perfil	*600.00*
A	*520.00*
B	*40.00*
C	*220.00*
C1	*220.00*
C2	*220.00*
C3	*145.00*
C4	-
C5	-
D	*40.00*
Longitud Del Perfil	*885.00*
Paso Del Tornillo Patrón	*10 - Ø18*
Carrera Total	*345.00*
Peso Total Del Sistema (Kg)	*455.00*

*** Roundness ≤ 0.003 mm.
**** All dimension are given in milimeters.

BS600-600/1200

Servo Slides With Hardeness Guideways & Ball Screw

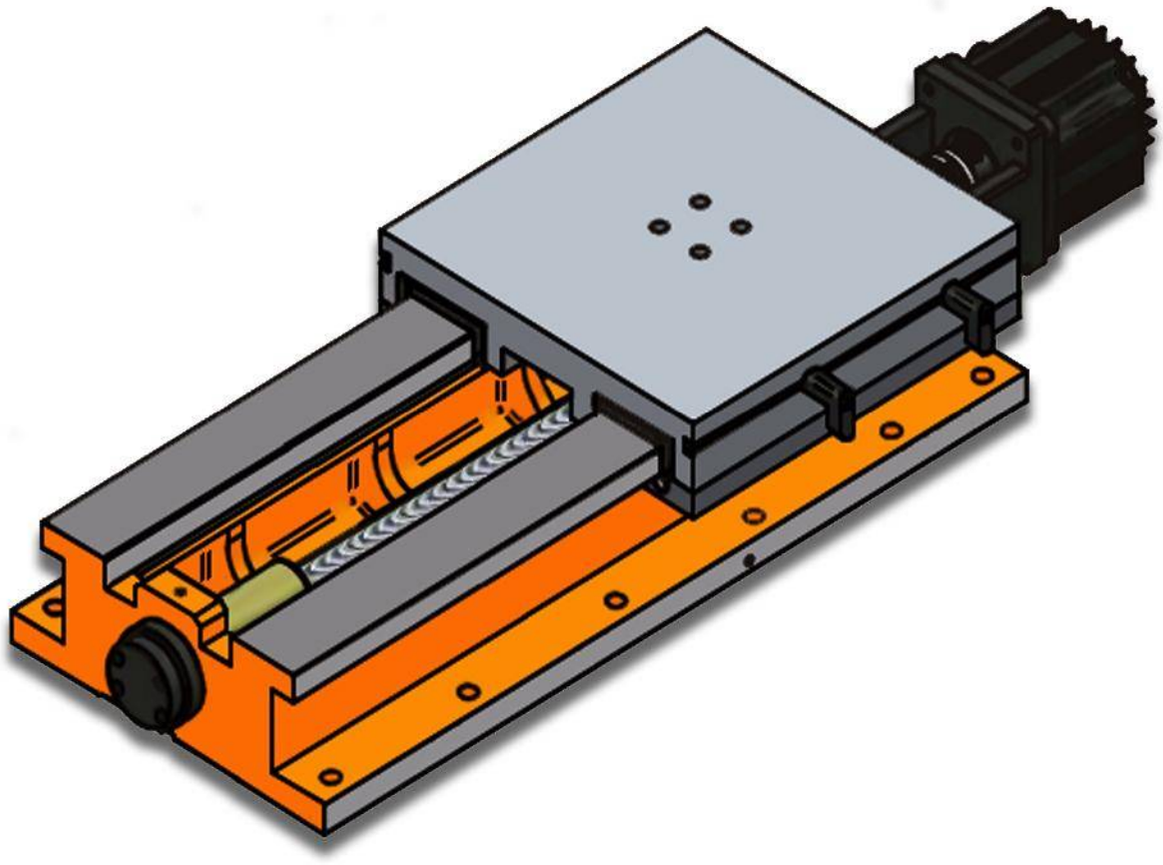

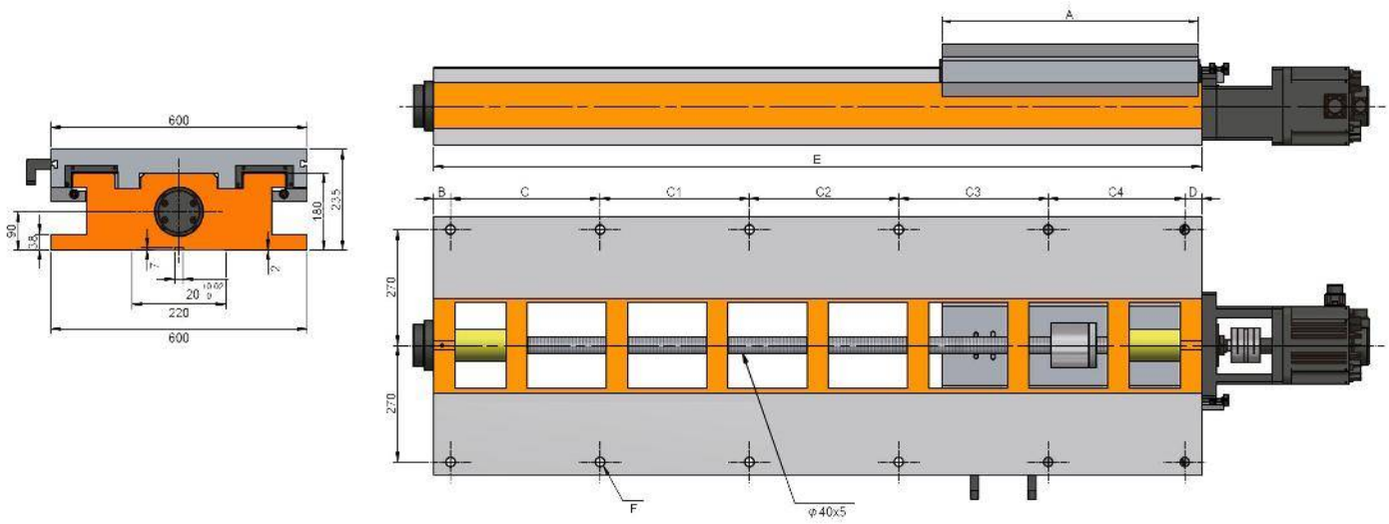
600
180
235
90
35
7
20
220
600
A
E
B
C
C1
C2
C3
C4
D
270
270
F
φ40x5

Characteristics & Dimensions

MODEL	BS600-600/1200
Profile Width	*600.00*
A	*600.00*
B	*40.00*
C	*220.00*
C1	*220.00*
C2	*220.00*
C3	*240.00*
C4	-
C5	-
D	*40.00*
Profile Lenght	*1,200.00*
Lead Screw Pace	*12 - Ø18*
Total Stroke	*580.00*
System Total Weight (Kg)	*542.00*

*** Roundness ≤ 0.003 mm.
**** All dimension are given in milimeters.

BS600-600/1800

Servo Slides With Hardeness Guideways & Ball Screw

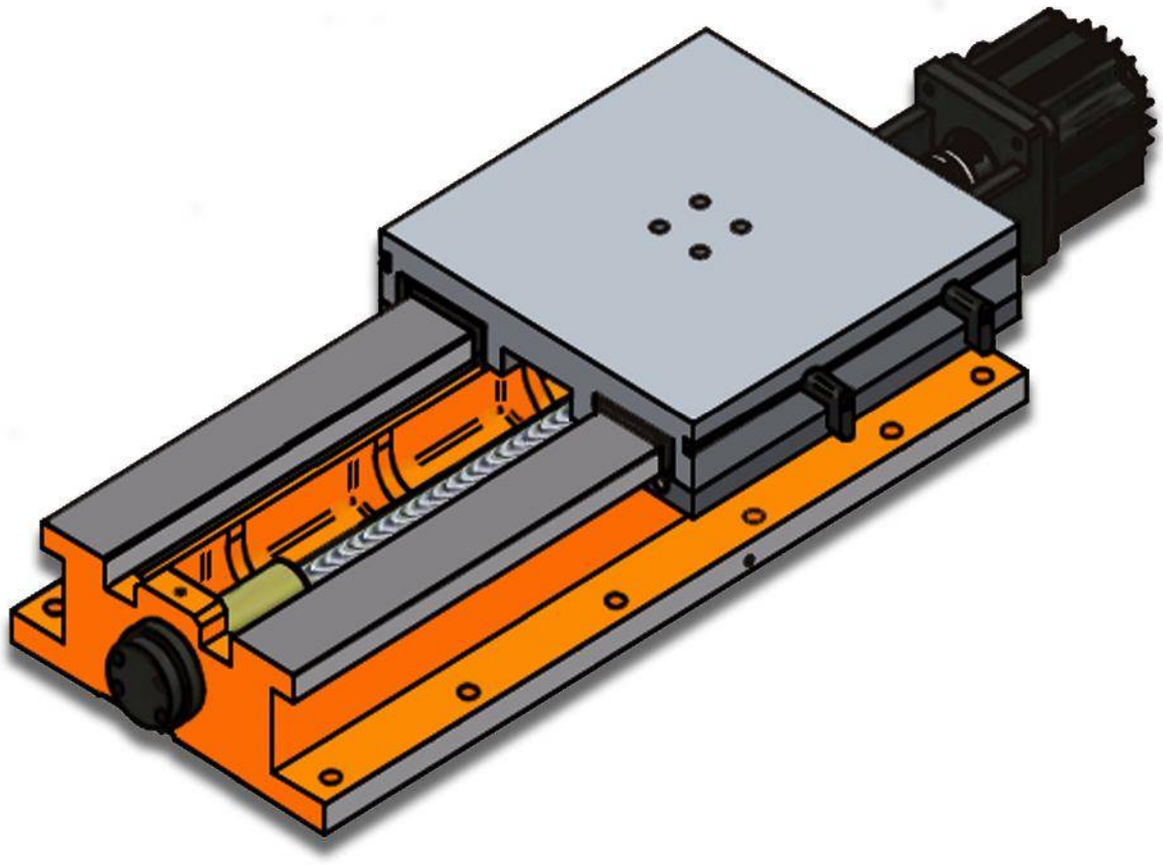

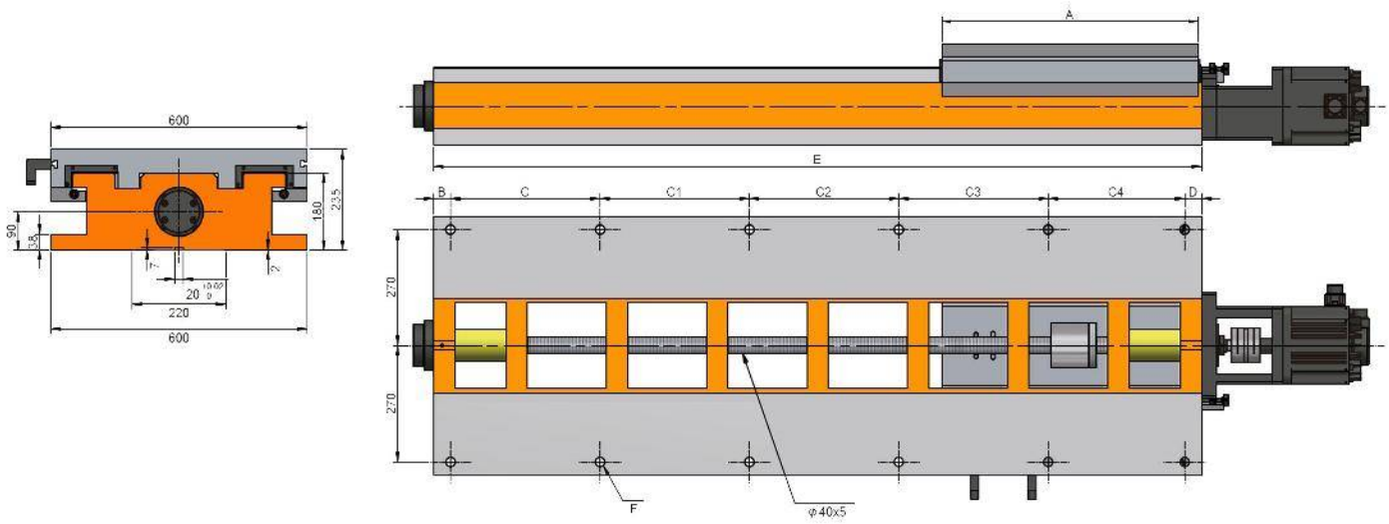
600
180
235
90
35
7
20
220
600
A
E
B
C
C1
C2
C3
C4
D
270
270
F
φ40x5

Characteristics & Dimensions

MODEL	BS600-600/1800
Profile Width	*600.00*
A	*600.00*
B	*40.00*
C	*350.00*
C1	*350.00*
C2	*350.00*
C3	*350.00*
C4	*320.00*
C5	*-*
D	*40.00*
Profile Lenght	*1,800.00*
Lead Screw Pace	*12 - Ø18*
Total Stroke	*1,180.00*
System Total Weight (Kg)	*720.00*

*** Roundness ≤ 0.003 mm.
***** All dimension are given in milimeters.

BS-H SERIES

REINFORCED SERVO SLIDES WITH HARDENED GUIDES AND BALL SCREW

BS250-300/420H

Hi Performance Servo Slides With Hardeness Guideways & Ball Screw

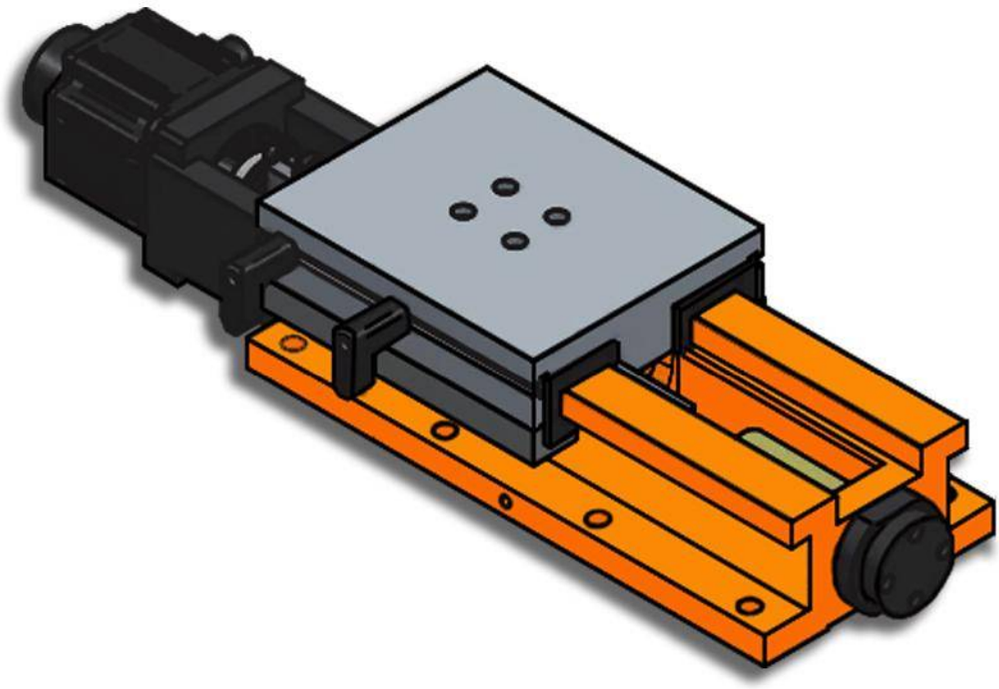

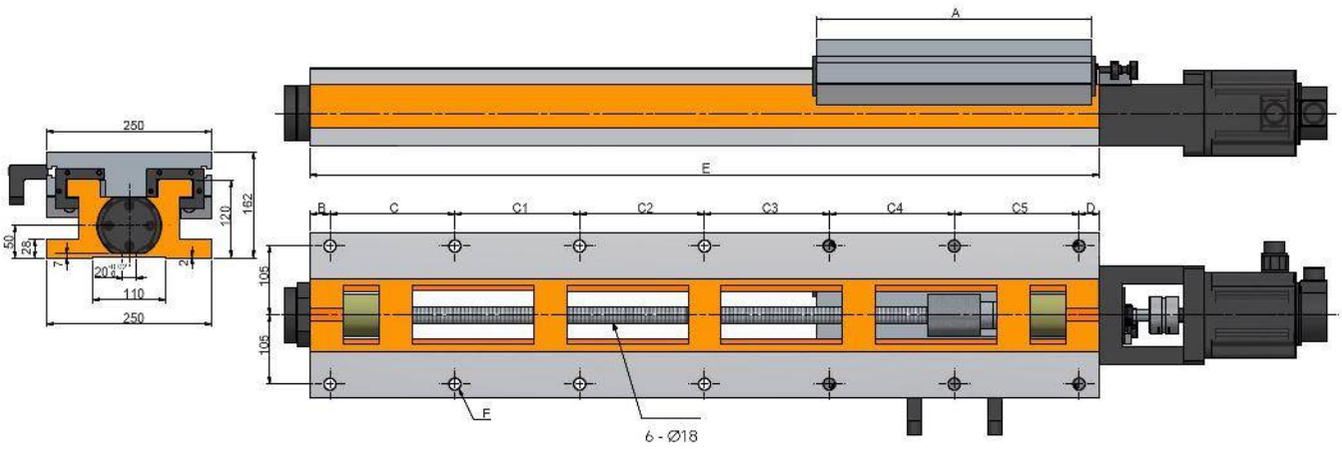
A
E
250
162
120
50
28
7
20
110
250
B
C
C1
C2
C3
C4
C5
D
105
105
F
6 - Ø18

Characteristics & Dimensions

MODEL	HS250-300/420H
Profile Width	*250.00*
A	*300.00*
B	*35.00*
C	*150.00*
C1	*200.00*
C2	-
C3	-
C4	-
C5	-
D	*35.00*
Profile Lenght	*420.00*
Lead Screw Pace	*6 -Ø18*
Total Stroke	*100.00*
System Total Weight (Kg)	*92.00*

*** Roundness ≤ 0.003 mm.
**** All dimension are given in milimeters.

BS250-300/560H

Hi Performance Servo Slides With Hardeness Guideways & Ball Screw

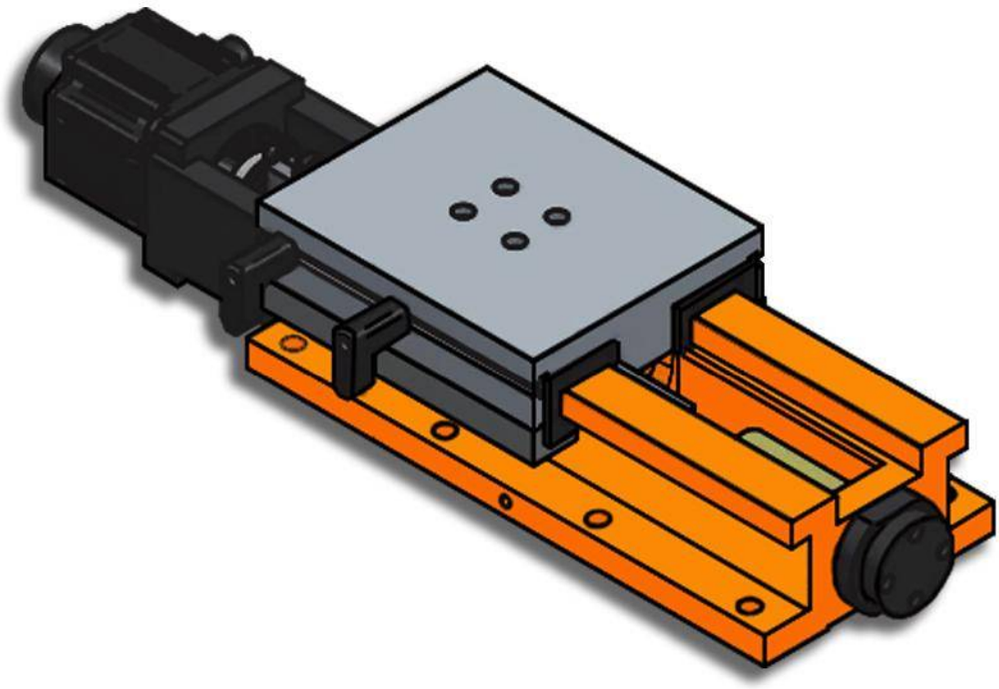

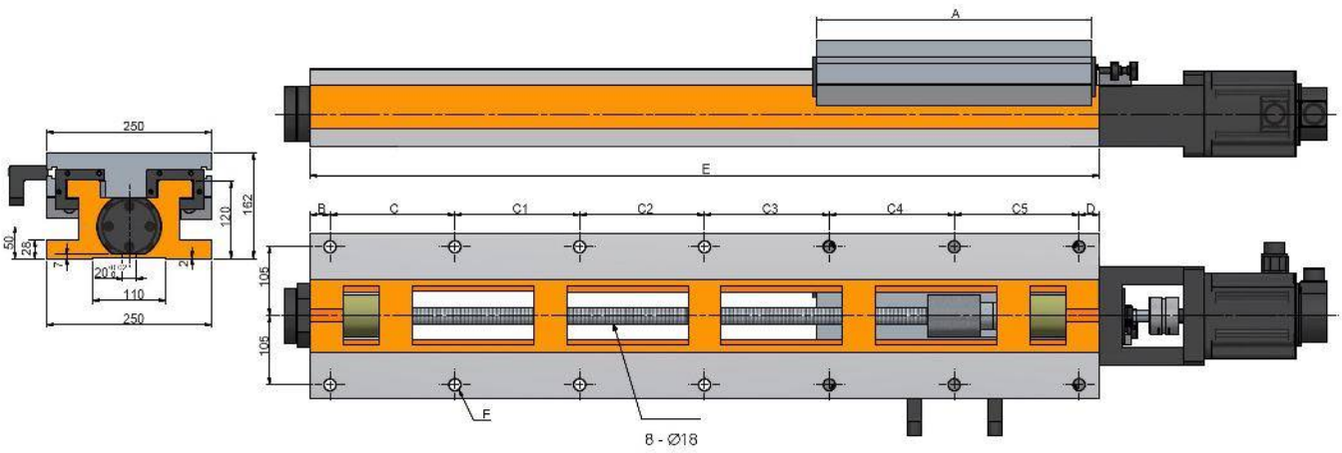
A
E
B
C
C1
C2
C3
C4
C5
D
250
162
120
50
25
7
20
110
250
105
105
F
8 - Ø18

Characteristics & Dimensions

MODEL	HS250-300/560H
Profile Width	*250.00*
A	*300.00*
B	*35.00*
C	*165.00*
C1	*165.00*
C2	*165.00*
C3	*-*
C4	*-*
C5	*-*
D	*30.00*
Profile Lenght	*560.00*
Lead Screw Pace	*8 - Ø18*
Total Stroke	*240.00*
System Total Weight (Kg)	*100.00*

***** Roundness ≤ 0.003 mm.*
****** All dimension are given in milimeters.*

BS250-420/560H

Hi Performance Servo Slides With Hardeness Guideways & Ball Screw

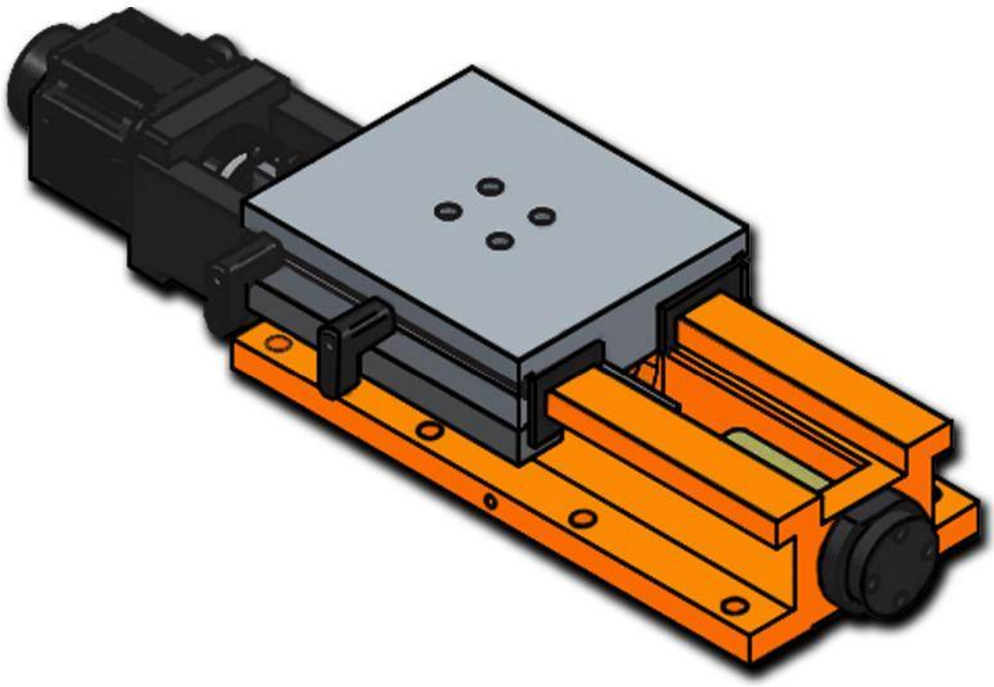

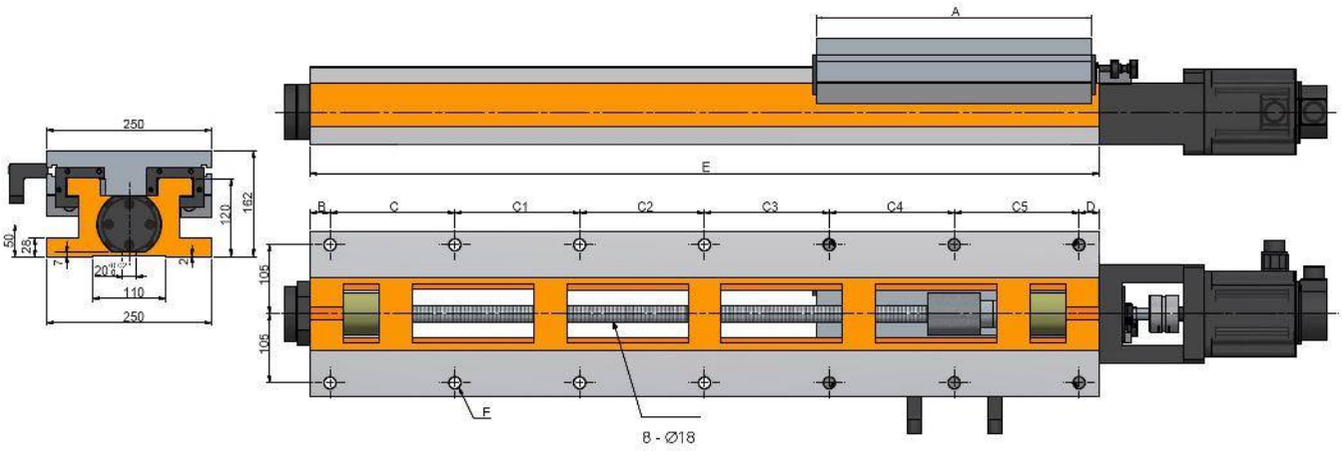
A
E
B
C
C1
C2
C3
C4
C5
D
250
162
120
50
25
7
20
110
250
105
105
F
8 - Ø18

Characteristics & Dimensions

MODEL	HS250-420/560H
Profile Width	*250.00*
A	*420.00*
B	*35.00*
C	*165.00*
C1	*165.00*
C2	*165.00*
C3	-
C4	-
C5	-
D	*30.00*
Profile Lenght	*560.00*
Lead Screw Pace	*8 - Ø18*
Total Stroke	*120.00*
System Total Weight (Kg)	*108.00*

*** Roundness ≤ 0.003 mm.
***** All dimension are given in milimeters.

BS250-420/670H

Hi Performance Servo Slides With Hardeness Guideways & Ball Screw

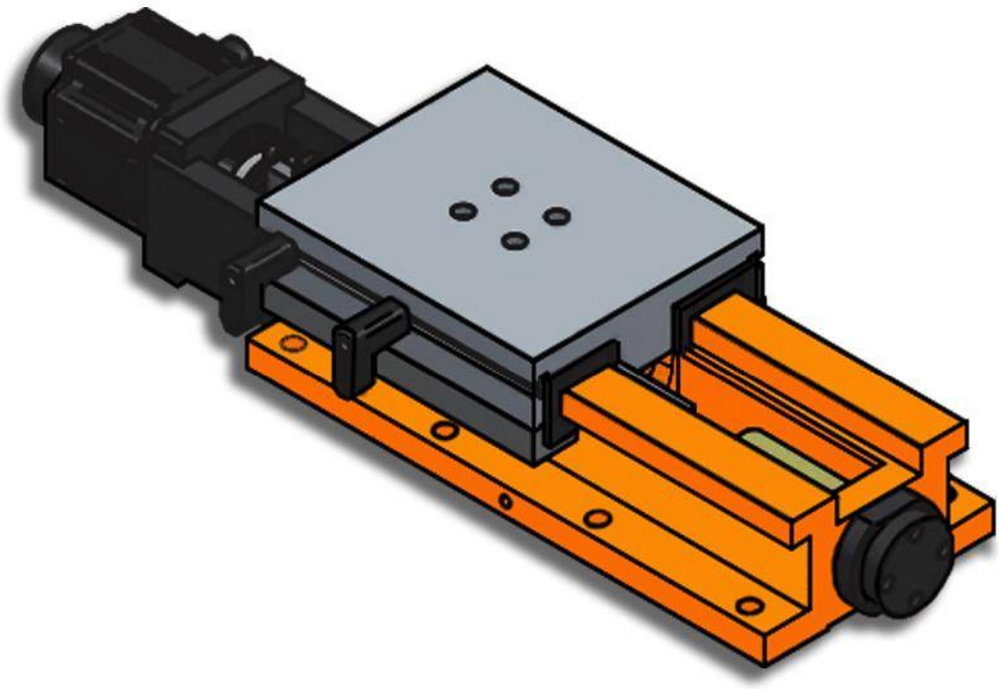

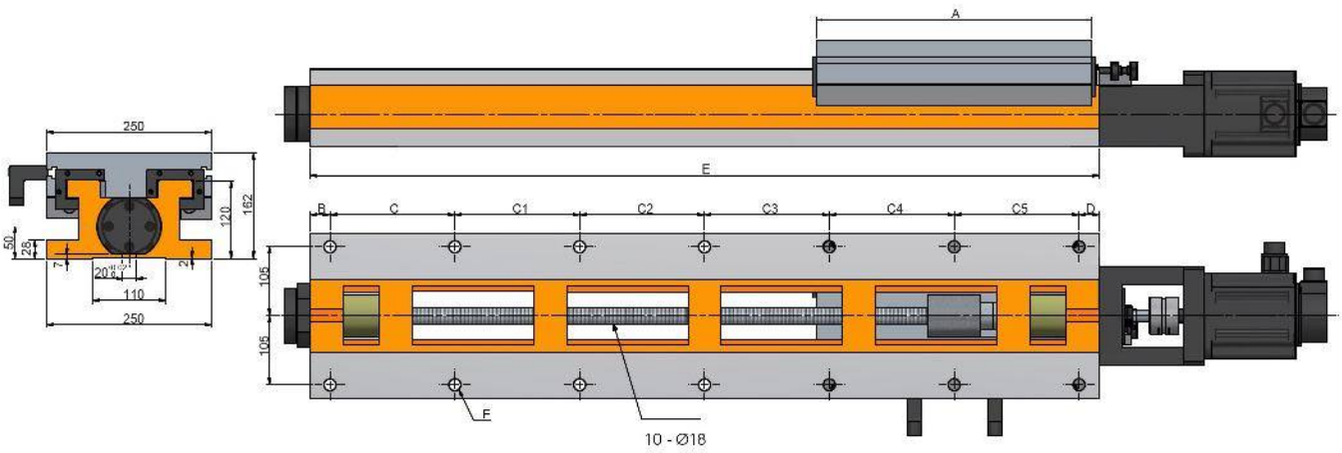
A
E
B
C
C1
C2
C3
C4
C5
D
250
162
120
50
25
7
20
110
250
105
105
F
10 - Ø18

Characteristics & Dimensions

MODEL	HS250-420/670H
Profile Width	*250.00*
A	*420.00*
B	*35.00*
C	*140.00*
C1	*140.00*
C2	*140.00*
C3	*180.00*
C4	*-*
C5	*-*
D	*35.00*
Profile Lenght	*670.00*
Lead Screw Pace	*10 - Ø18*
Total Stroke	*230.00*
System Total Weight (Kg)	*130.00*

***** Roundness ≤ 0.003 mm.*
****** All dimension are given in milimeters.*

BS250-420/750H

Hi Performance Servo Slides With Hardeness Guideways & Ball Screw

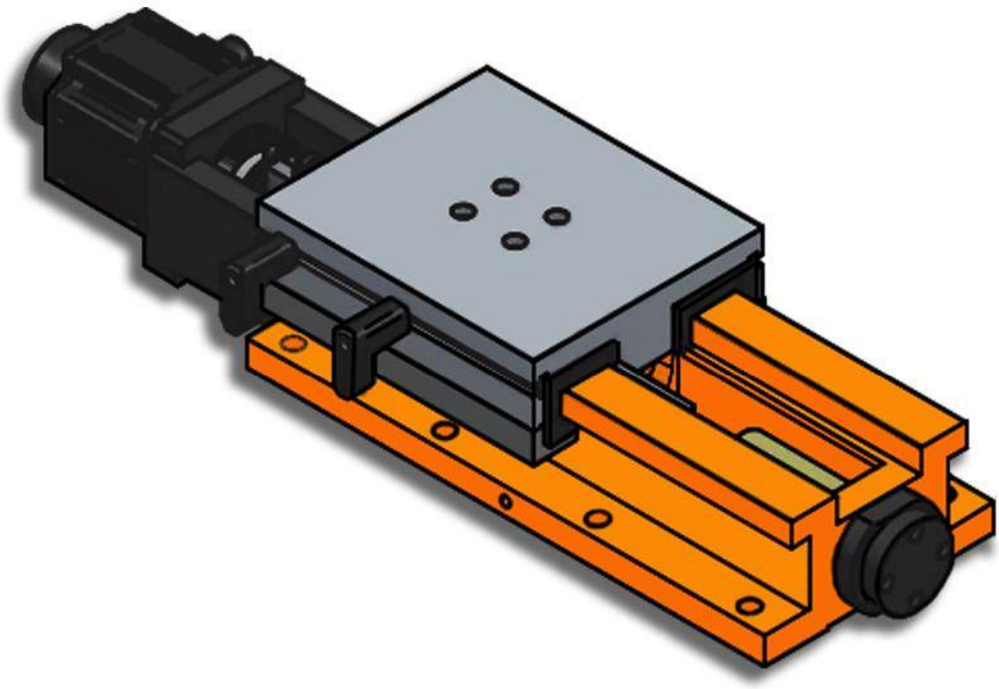

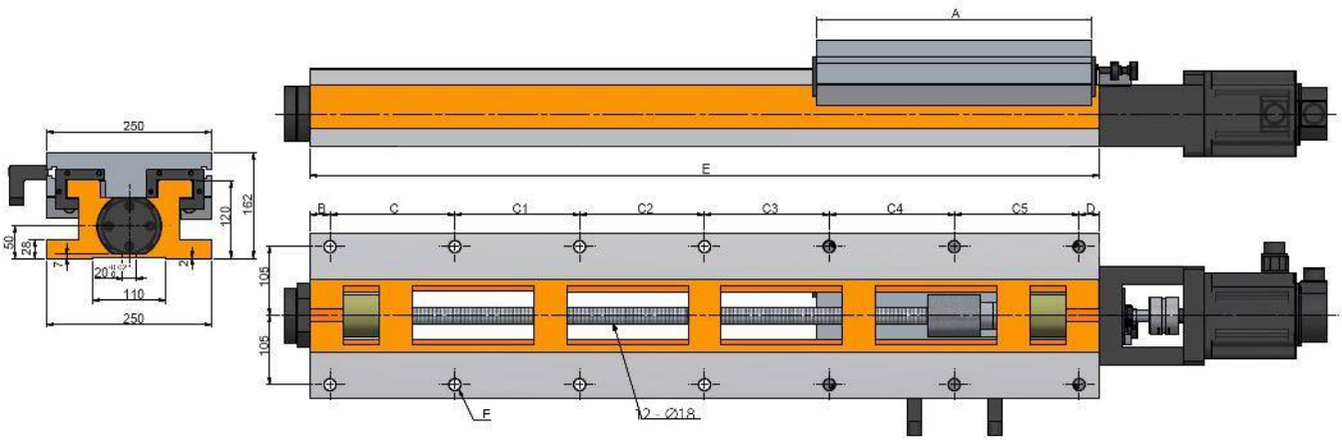
A
E
B
C
C1
C2
C3
C4
C5
D
250
162
120
50
28
7
20
110
250
2
105
105
F
12 - Ø18

Characteristics & Dimensions

MODEL	HS250-420/750H
Profile Width	*250.00*
A	*420.00*
B	*25.00*
C	*140.00*
C1	*140.00*
C2	*140.00*
C3	*140.00*
C4	*140.00*
C5	*-*
D	*25.00*
Profile Lenght	*750.00*
Lead Screw Pace	*12 - Ø18*
Total Stroke	*310.00*
System Total Weight (Kg)	*148.00*

*** Roundness ≤ 0.003 mm.
**** All dimension are given in milimeters.

BS250-420/940H

Hi Performance Servo Slides With Hardeness Guideways & Ball Screw

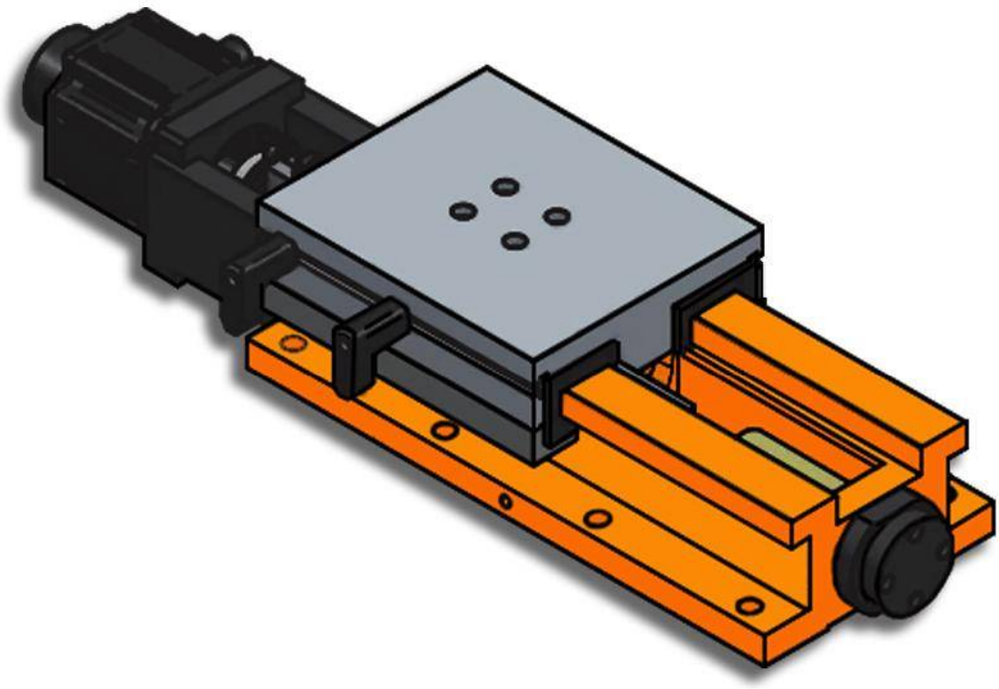

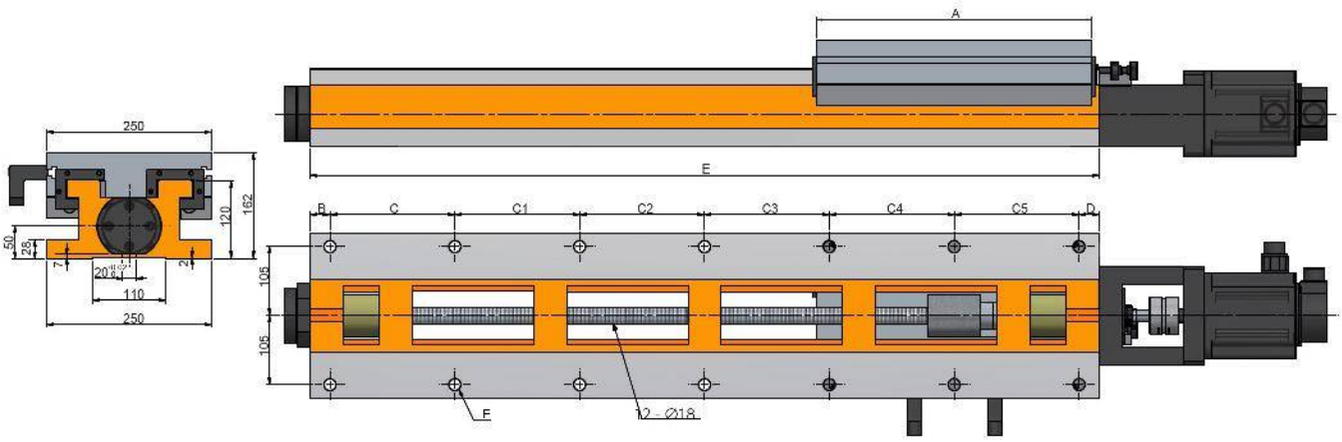
A
E
B
C
C1
C2
C3
C4
C5
D
250
162
120
50
28
7
20
110
250
2
105
105
F
12 Ø18

Characteristics & Dimensions

MODEL	HS250-420/940H
Profile Width	*250.00*
A	*420.00*
B	*35.00*
C	*175.00*
C1	*175.00*
C2	*175.00*
C3	*175.00*
C4	*175.00*
C5	*-*
D	*30.00*
Profile Lenght	*940.00*
Lead Screw Pace	*12 - Ø18*
Total Stroke	*500.00*
System Total Weight (Kg)	*178.00*

*** Roundness ≤ 0.003 mm.
**** All dimension are given in milimeters.

BS250-420/1200H

Hi Performance Servo Slides With Hardeness Guideways & Ball Screw

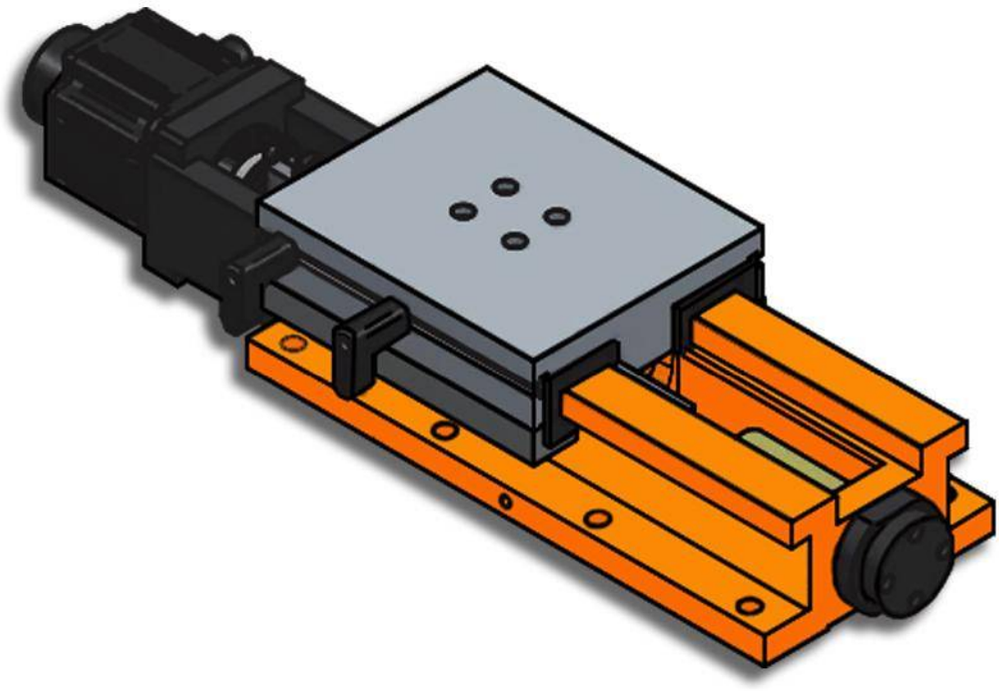

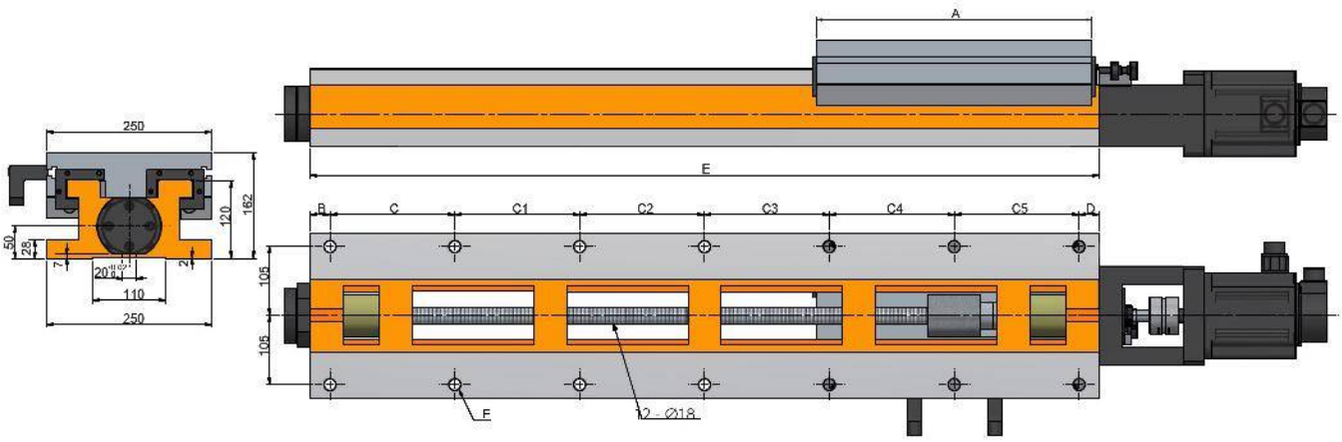
A
E
B
C
C1
C2
C3
C4
C5
D
250
162
120
50
28
7
20
110
250
2
105
105
F
12 Ø18

Characteristics & Dimensions

MODEL	HS250-420/1200H
Profile Width	*250.00*
A	*420.00*
B	*30.00*
C	*190.00*
C1	*190.00*
C2	*190.00*
C3	*190.00*
C4	*190.00*
C5	*190.00*
D	*30.00*
Profile Lenght	*1,200.00*
Lead Screw Pace	*14 - Ø18*
Total Stroke	*760.00*
System Total Weight (Kg)	*215.00*

***** Roundness ≤ 0.003 mm.*
****** All dimension are given in milimeters.*

BS300-300/420H

Hi Performance Servo Slides With Hardeness Guideways & Ball Screw

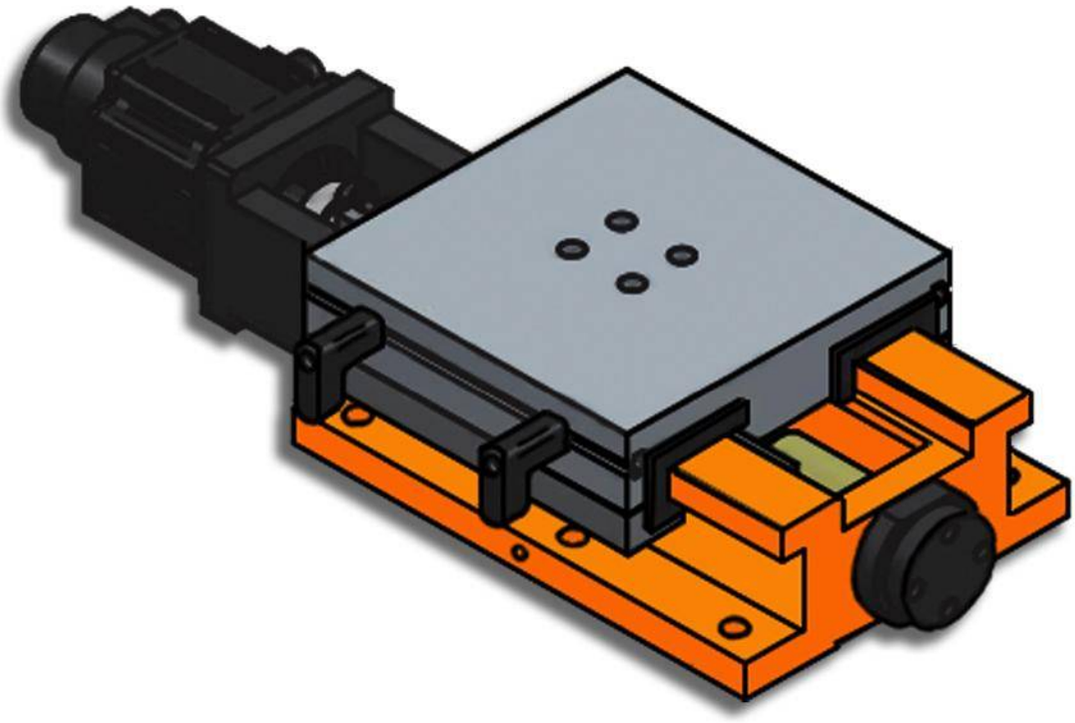

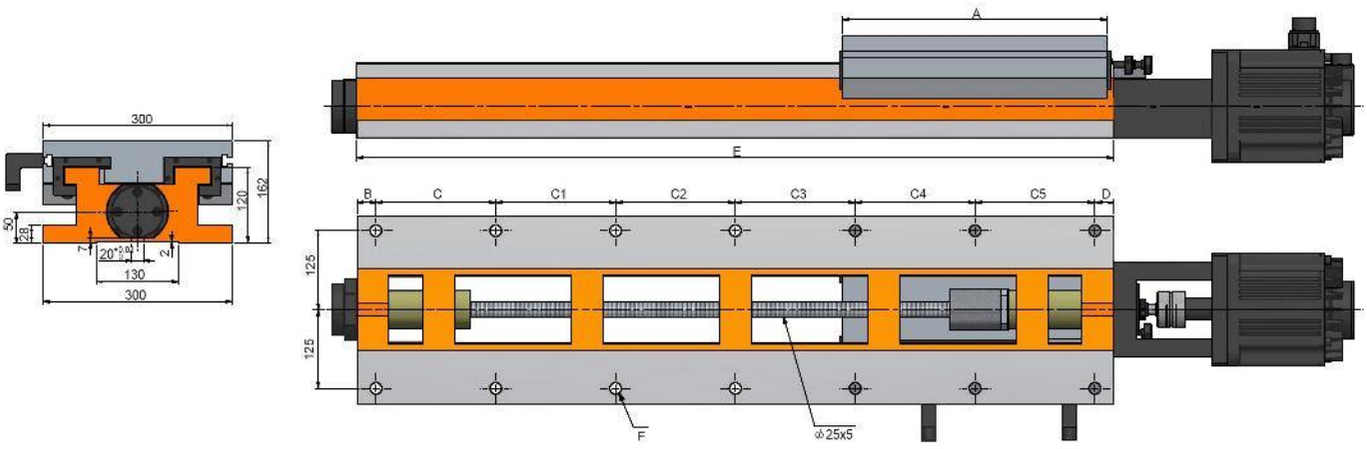
300
120
162
50
23
7
20°
2
130
300
A
E
B
C
C1
C2
C3
C4
C5
D
125
125
F
Φ25x5

Characteristics & Dimensions

MODEL	BS300-300/420H
Ancho Del Perfil	*300.00*
A	*300.00*
B	*35.00*
C	*150.00*
C1	*200.00*
C2	-
C3	-
C4	-
C5	-
D	*35.00*
Longitud Del Perfil	*420.00*
Carrera Máxima Del Sistema	*100.00*
Paso Del Tornillo Patrón	*6 - Ø18*
Peso Total Del Sistema (Kg)	*120.00*

*** Roundness ≤ 0.003 mm.
**** All dimension are given in milimeters.

BS300-360/560H

Hi Performance Servo Slides With Hardeness Guideways & Ball Screw

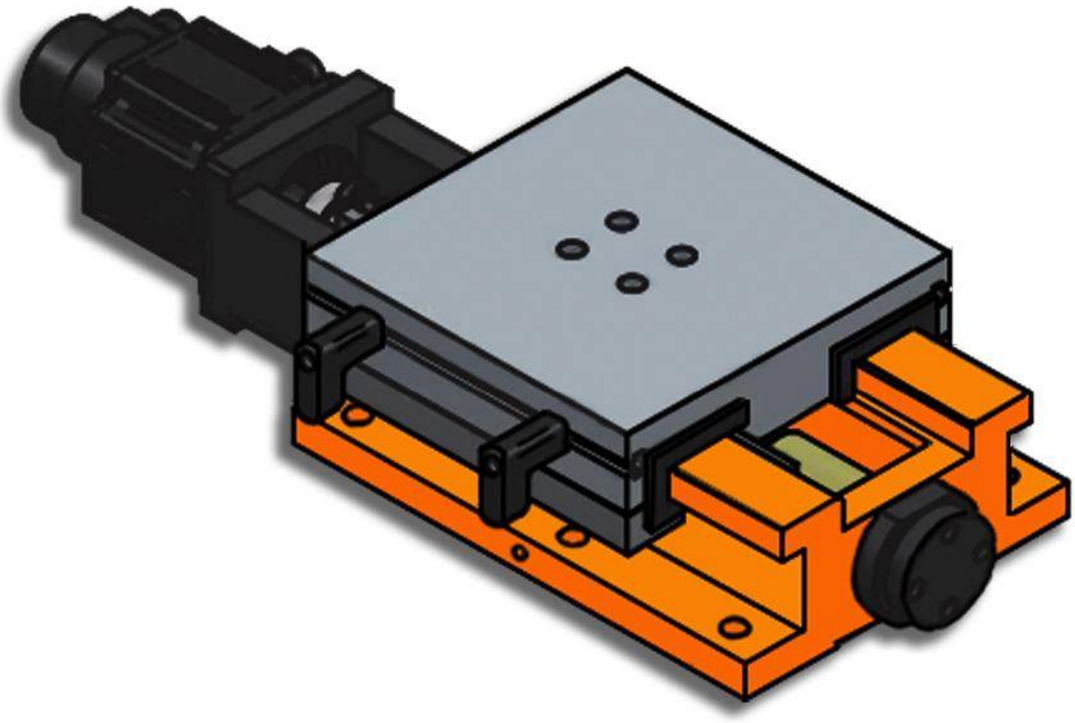

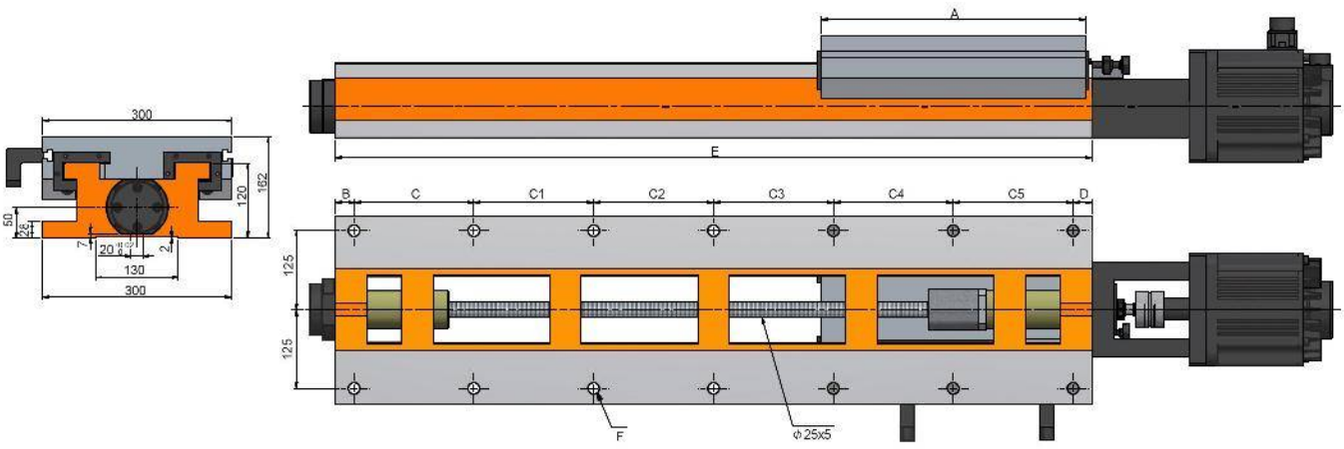
A
E
B
C
C1
C2
C3
C4
C5
D
300
120
182
50
26
7
20
2
130
300
125
125
F
Φ25x5

Characteristics & Dimensions

MODEL	BS300-360/560H
Profile Width	*300.00*
A	*360.00*
B	*35.00*
C	*165.00*
C1	*165.00*
C2	*165.00*
C3	-
C4	-
C5	-
D	*30.00*
Profile Lenght	*560.00*
Lead Screw Pace	*180.00*
Total Stroke	*8 - Ø18*
System Total Weight (Kg)	*140.00*

*** Roundness ≤ 0.003 mm.
**** All dimension are given in milimeters.

BS300-420/560H

Hi Performance Servo Slides With Hardeness Guideways & Ball Screw

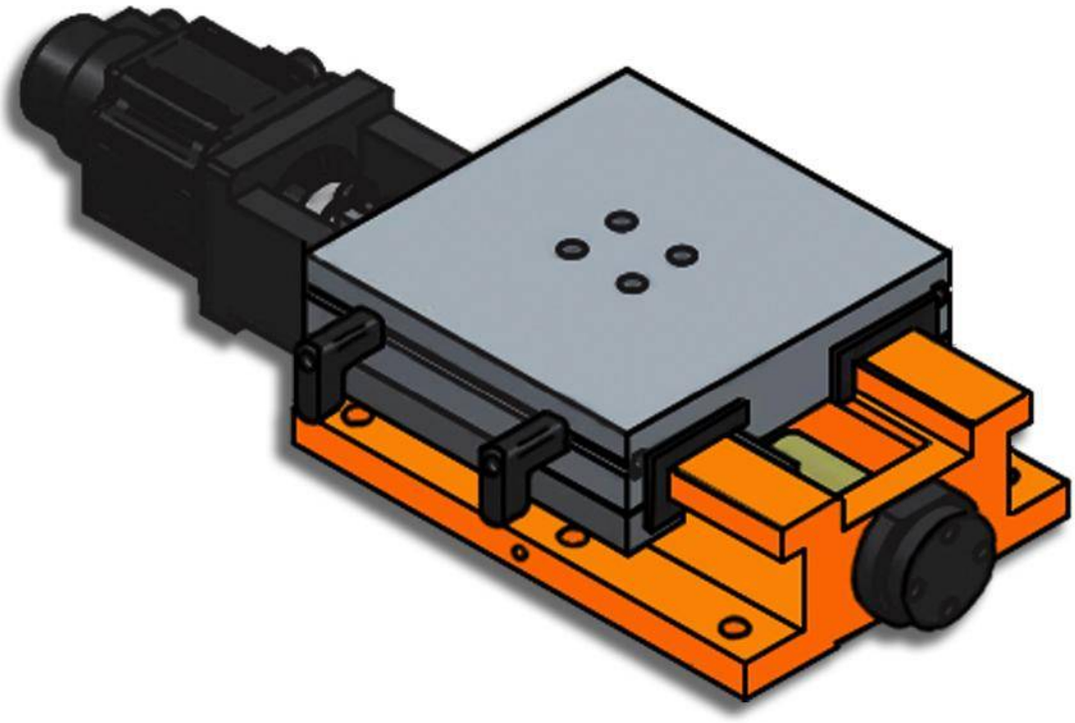

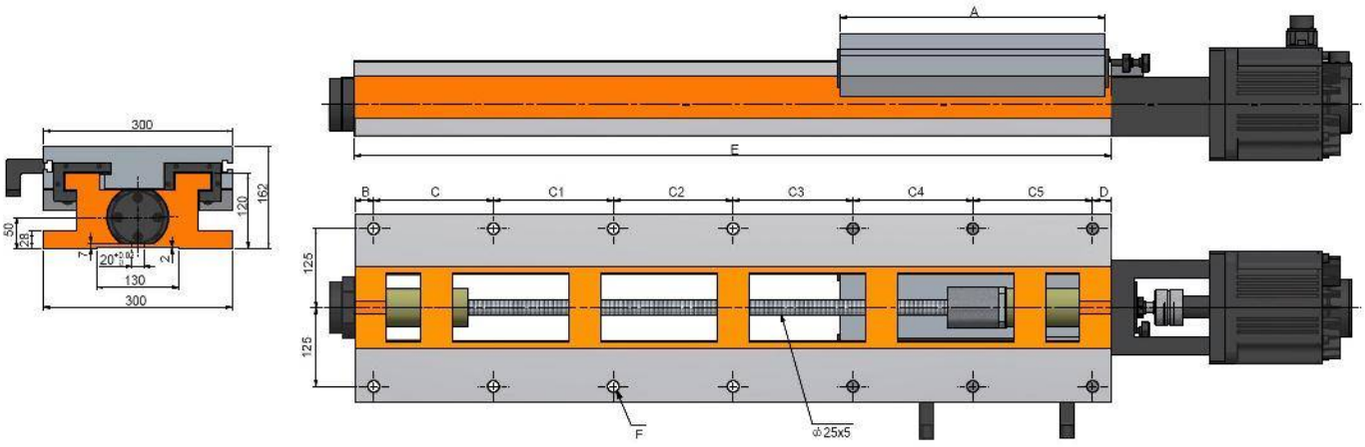
300
162
120
50
28
7
20°
2
130
300
A
E
B
C
C1
C2
C3
C4
C5
D
125
125
F
Φ25x5

Characteristics & Dimensions

MODEL	BS300-420/560H
Profile Width	*300.00*
A	*420.00*
B	*35.00*
C	*165.00*
C1	*165.00*
C2	*165.00*
C3	-
C4	-
C5	-
D	*30.00*
Profile Lenght	*560.00*
Lead Screw Pace	*120.00*
Total Stroke	*8 - Ø18*
System Total Weight (Kg)	*144.00*

*** Roundness ≤ 0.003 mm.
**** All dimension are given in milimeters.

BS300-420/670H

Hi Performance Servo Slides With Hardeness Guideways & Ball Screw

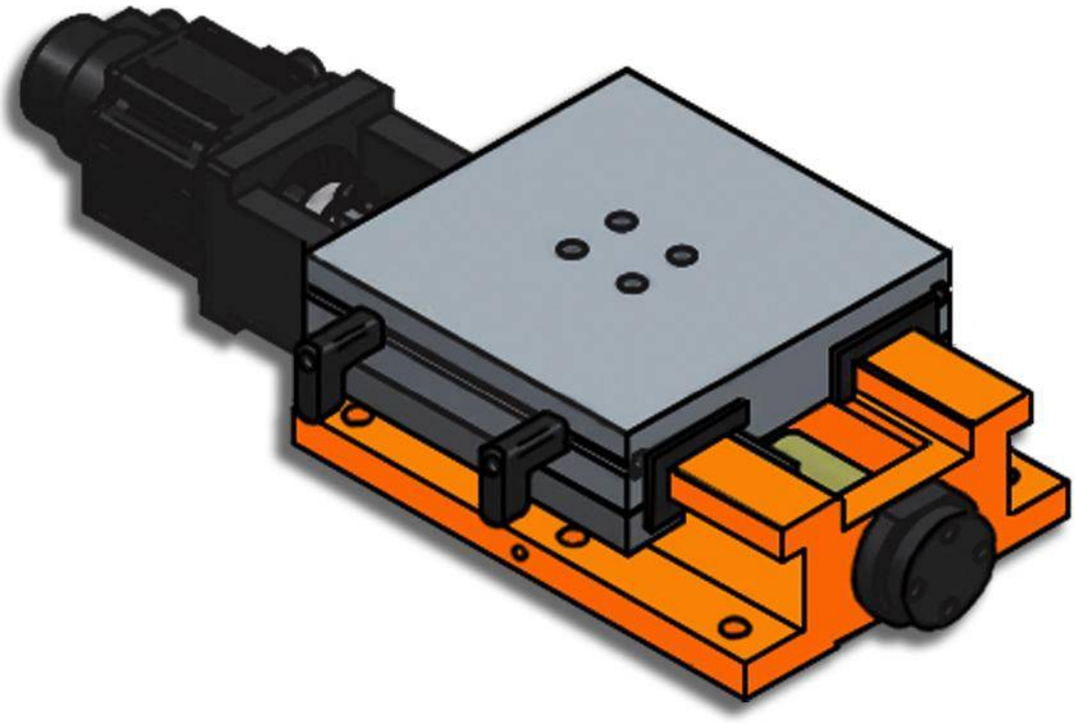

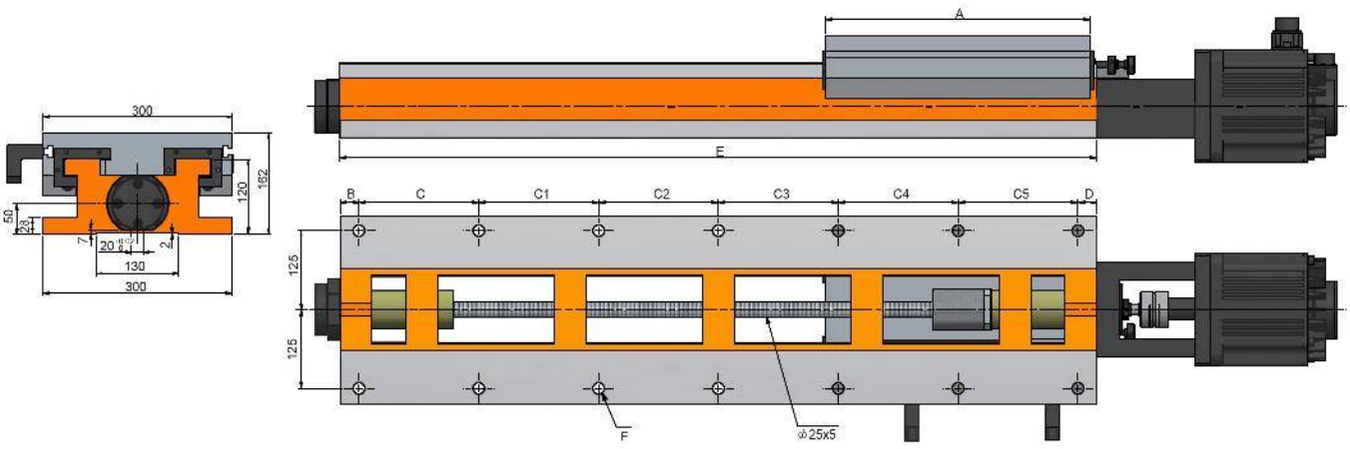
300
162
120
50
23
7
20
130
2
300
A
E
B
C
C1
C2
C3
C4
C5
D
125
125
F
φ25x5

Characteristics & Dimensions

MODEL	BS300-420/670H
Profile Width	*300.00*
A	*420.00*
B	*35.00*
C	*140.00*
C1	*140.00*
C2	*140.00*
C3	*180.00*
C4	*-*
C5	*-*
D	*35.00*
Profile Lenght	*670.00*
Lead Screw Pace	*230.00*
Total Stroke	*10 - Ø18*
System Total Weight (Kg)	*178.00*

***** Roundness ≤ 0.003 mm.*
****** All dimension are given in milimeters.*

BS300-420/800H

Hi Performance Servo Slides With Hardeness Guideways & Ball Screw

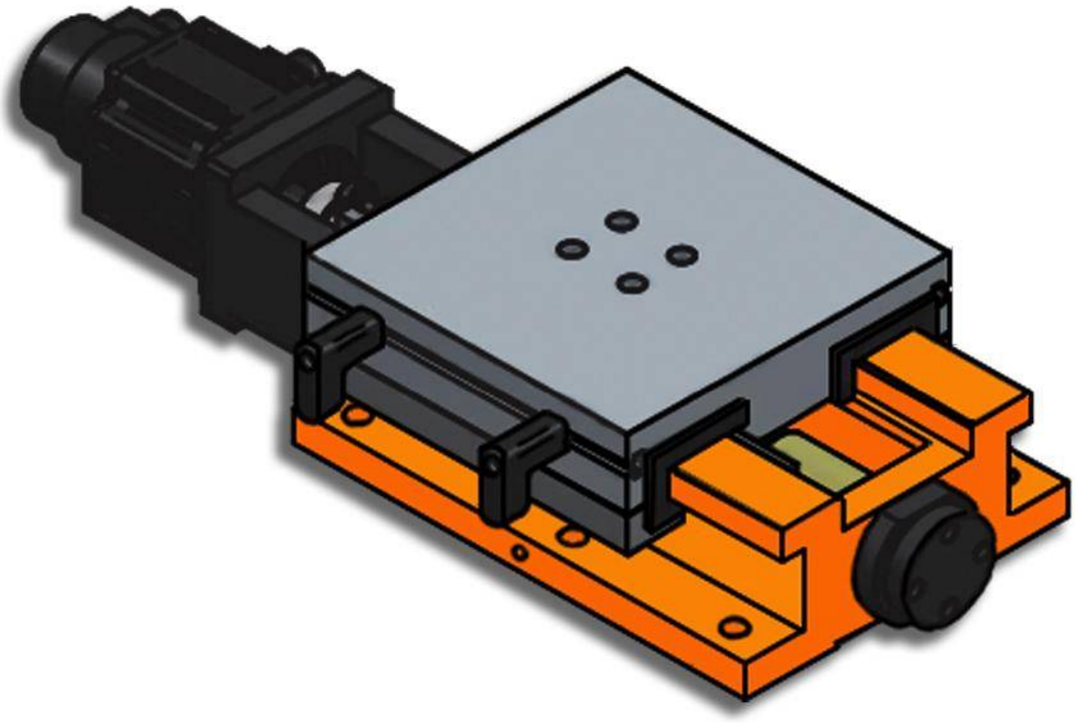

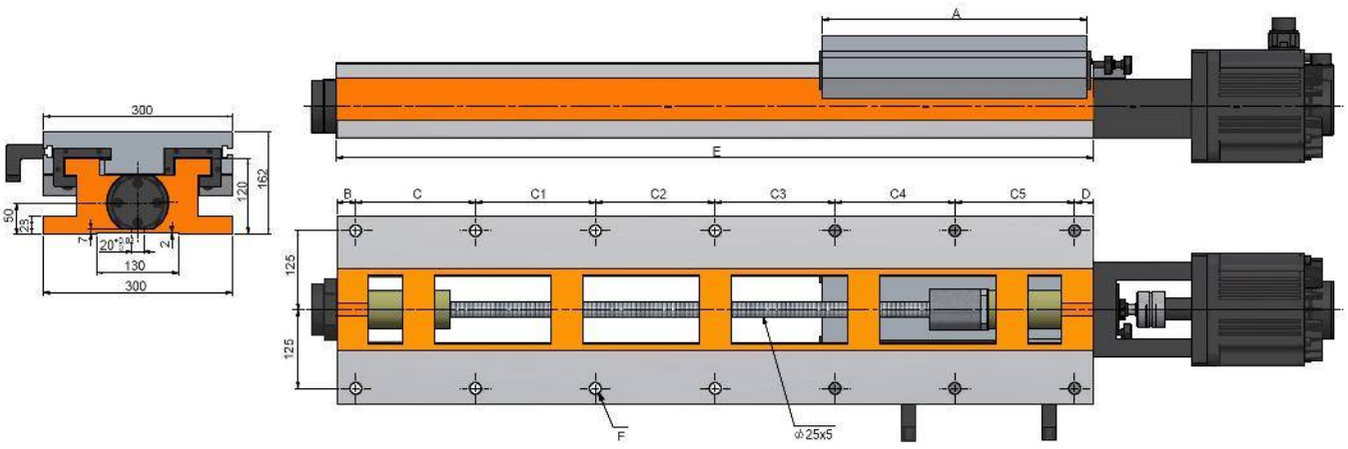
A
E
B
C
C1
C2
C3
C4
C5
D
300
162
120
50
23
7
20
2
130
300
125
125
F
Φ25x5

Characteristics & Dimensions

MODEL	BS300-420/800H
Ancho Del Perfil	*300.00*
A	*420.00*
B	*35.00*
C	*140.00*
C1	*140.00*
C2	*140.00*
C3	*140.00*
C4	*170.00*
C5	-
D	*35.00*
Longitud Del Perfil	*800.00*
Carrera Máxima Del Sistema	*360.00*
Paso Del Tornillo Patrón	*12 - Ø18*
Peso Total Del Sistema (Kg)	*195.00*

***** Roundness ≤ 0.003 mm.*
****** All dimension are given in milimeters.*

BS300-420/940H

Hi Performance Servo Slides With Hardeness Guideways & Ball Screw

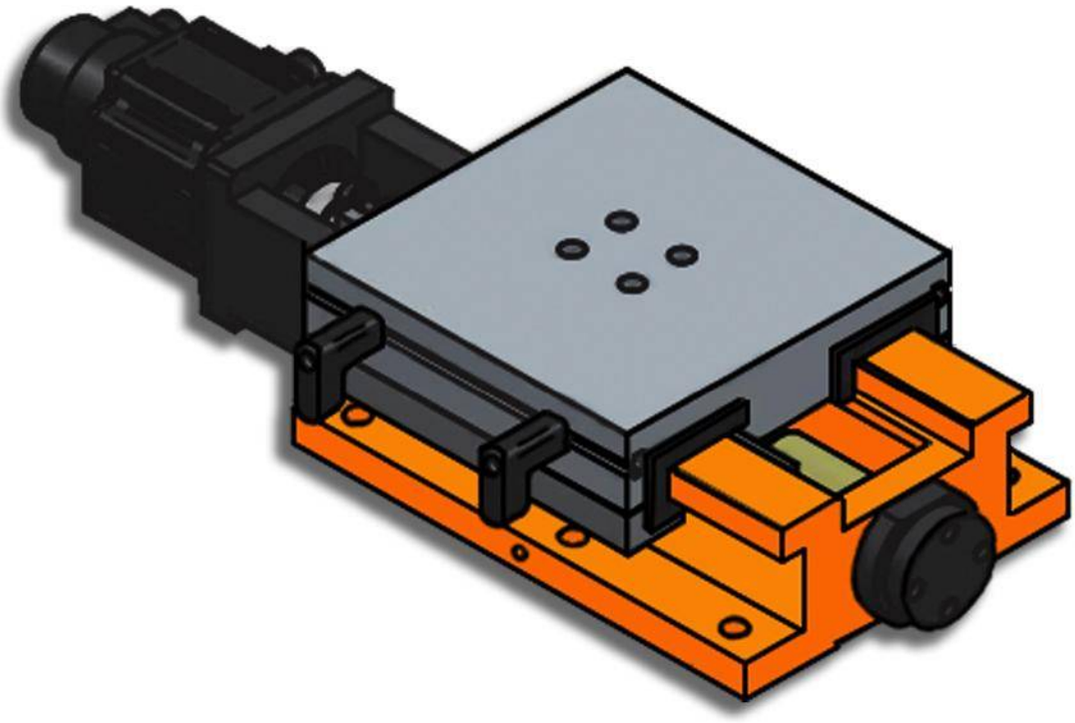

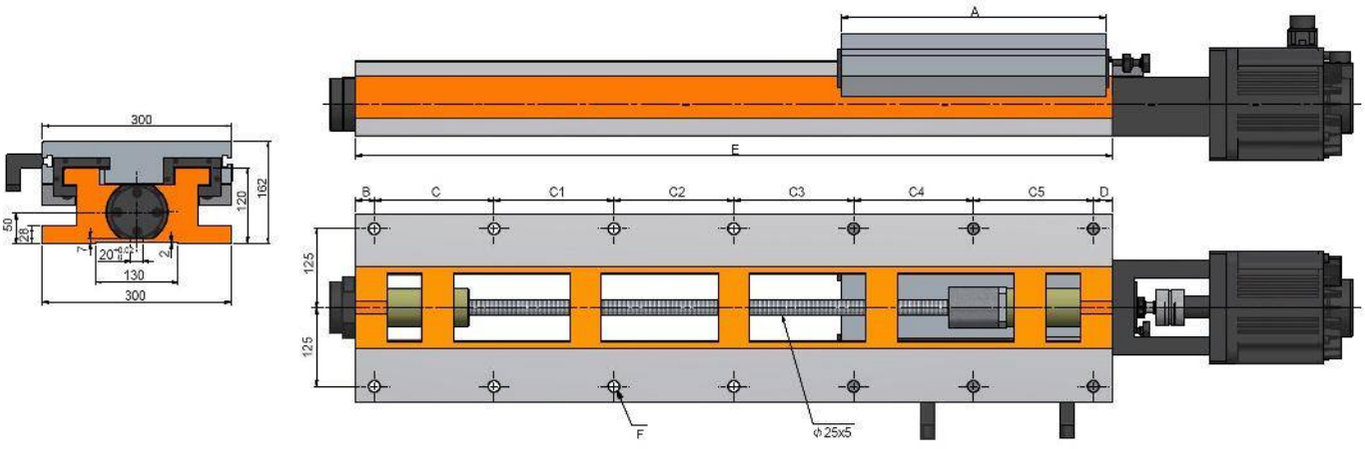
300
120
162
50
20
130
300
A
E
B
C
C1
C2
C3
C4
C5
D
125
125
F
Φ25x5

Characteristics & Dimensions

MODEL	BS300-420/940H
Profile Width	*300.00*
A	*420.00*
B	*35.00*
C	*175.00*
C1	*175.00*
C2	*175.00*
C3	*175.00*
C4	*175.00*
C5	*-*
D	*30.00*
Profile Lenght	*940.00*
Lead Screw Pace	*500.00*
Total Stroke	*12 - Ø18*
System Total Weight (Kg)	*210.00*

***** Roundness ≤ 0.003 mm.*
****** All dimension are given in milimeters.*

BS300-420/1200H

Hi Performance Servo Slides With Hardeness Guideways & Ball Screw

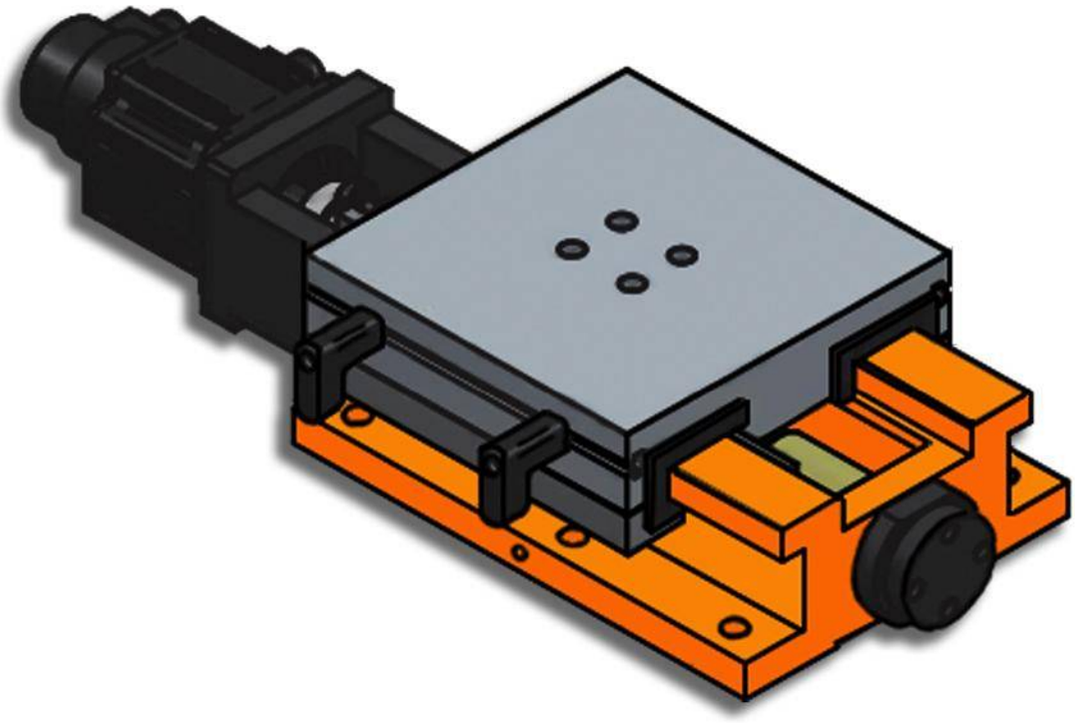

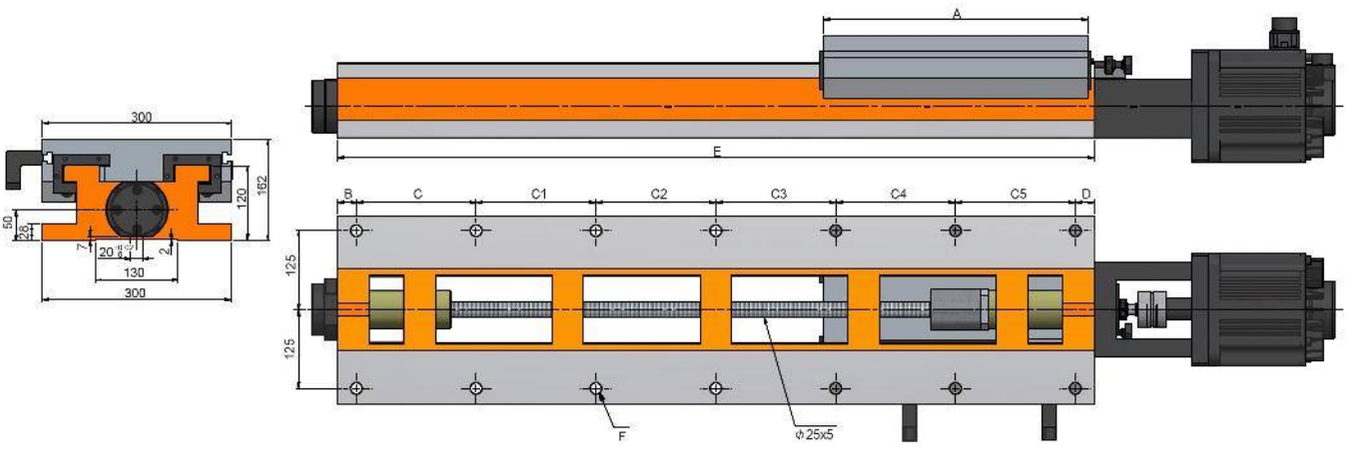
A
E
B
C
C1
C2
C3
C4
C5
D
300
120
162
50
26
7
20
2
130
300
125
125
F
ϕ25x5

Characteristics & Dimensions

MODEL	BS300-420/1200H
Profile Width	*300.00*
A	*420.00*
B	*30.00*
C	*190.00*
C1	*190.00*
C2	*190.00*
C3	*190.00*
C4	*190.00*
C5	*190.00*
D	*30.00*
Profile Lenght	*1,200.00*
Lead Screw Pace	*760.00*
Total Stroke	*14 - Ø18*
System Total Weight (Kg)	*246.00*

*** Roundness ≤ 0.003 mm.
**** All dimension are given in milimeters.

MULTI SPINDLE HEAD SERIES

DRILLING/TAPPING MULTI SPINDLE HEAD WITH 2 ~ 16 SPINDLE TIPS

A SERIES

DRILLING/TAPPING MULTI SPINDLE HEADS

A-100 (A-116)

Drilling & Tapping Multi Spindle Heads



Characteristics & Dimensions

MODEL	A-100 (A-116)
Nozzle	C-6
Minimum Distance Between Centers	100.00
Maximum Distance Between Centers	18.00
Speed Radio	1 : 1
Maximum Drilling Capability	Ø6
Maximum Tapping Capability	M6
Spindle	2 ~ 4

**** All dimension are given in millimeters.

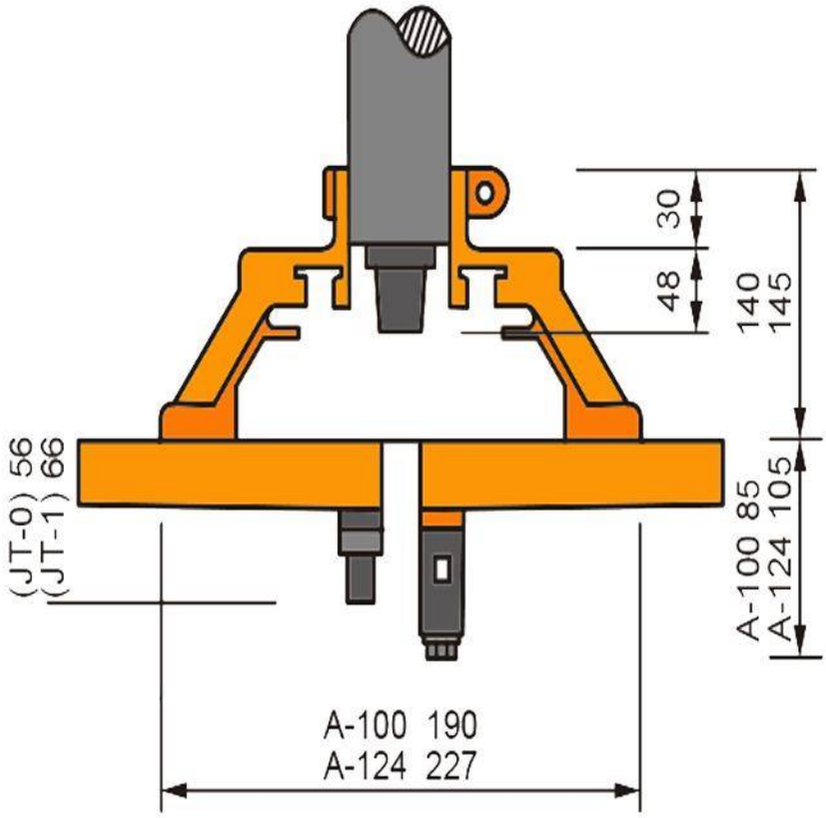

CT SERIES: TAPPING TYPE

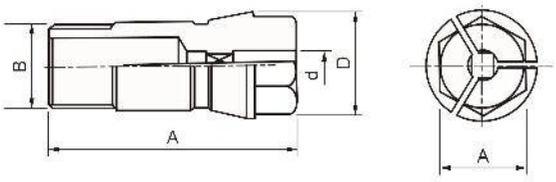

C SERIES: DRILLING TYPE

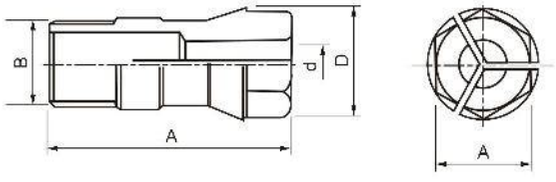

Characteristics & Dimensions

TAPPING NOZZLES

MODEL	Ød	ØD	ØL	B	A	Ø CAPACITY
CT-4	2.00 ~ 4.00	8.20	24.00	1/4 - 28UNF	6.00	M3.50 x 0.60
CT-5	2.00 ~ 5.00	10.80	31.50	5/16 - 24UNF	8.00	M4 x 0.70
CT-6	2.00 ~ 6.00	13.10	36.00	3/8 - 24UNF	10.00	M6 x 1.00
CT-9	2.00 ~ 7.00	17.00	46.00	1/2 - 20UNF	14.00	M8 x 1.25
CT-12	3.00 ~ 9.00	21.00	50.00	5/8 - 18UNF	17.00	M12 x 1.75
CT-14	3.00 ~ 12.00	24.50	54.00	3/4 - 16UNF	21.00	M14 x 2.00
CT-16	3.00 ~ 14.00	31.00	70.00	M24 - 2.00	26.00	M18 x 2.50
NT-1	2.00 ~ 5.00	8.20	30.10	1/4 - 28UNF	7.00	M4 x 0.70

DRILLING NOZZLES

MODEL	Ød	ØD	ØL	B	A	Ø CAPACITY
C-4	2.00 ~ 4.00	8.20	24.00	1/4 - 28UNF	6.00	4.00
C-5	2.00 ~ 5.00	10.80	31.50	5/16 - 24UNF	8.00	5.00
C-6	2.00 ~ 6.00	13.10	36.00	3/8 - 24UNF	10.00	6.00
C-9	2.00 ~ 7.00	17.00	46.00	1/2 - 20UNF	14.00	9
C-12	3.00 ~ 9.00	21.00	50.00	5/8 - 18UNF	17.00	12.00
C-14	3.00 ~ 12.00	24.50	54.00	3/4 - 16UNF	21.00	14.00
C-16	3.00 ~ 14.00	31.00	70.00	M24 - 2.00	26.00	16.00
NT-1	3.00 ~ 12.00	8.20	30.10	1/4 - 28UNF	7.00	5.00

**** All dimension are given in millimeters.

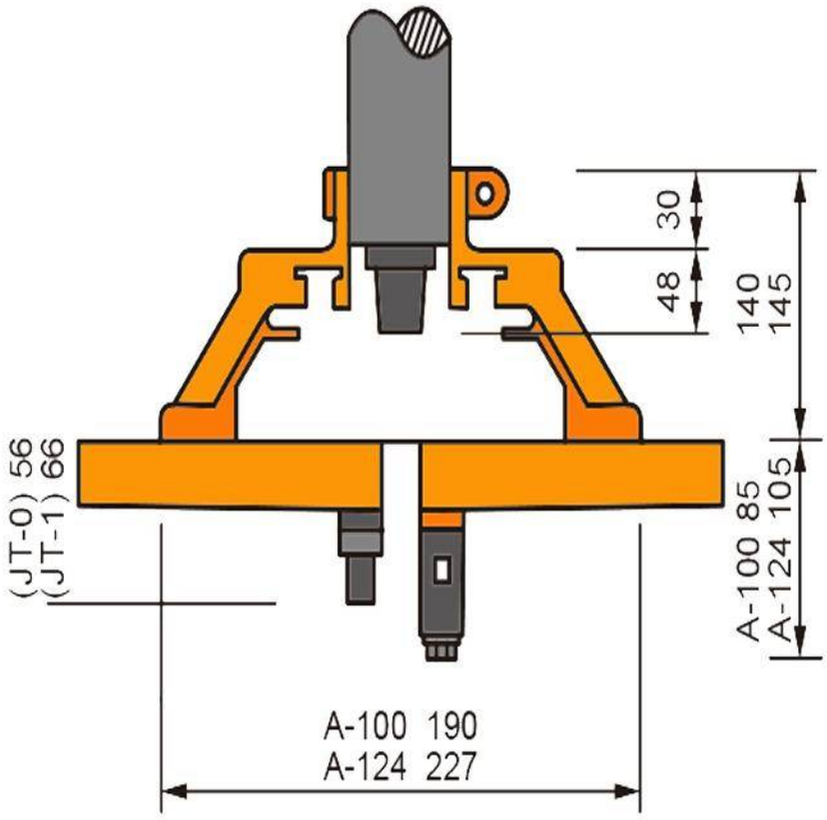

CT SERIES: TAPPING TYPE

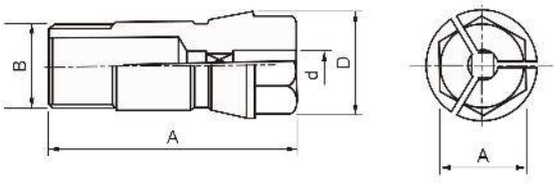

C SERIES: DRILLING TYPE

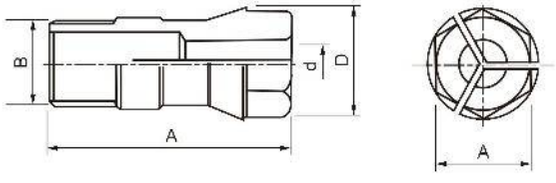

A-124

Drilling & Tapping Multi Spindle Heads



Characteristics & Dimensions

MODEL	A-124
Nozzle	C-9
Minimum Distance Between Centers	124.00
Maximum Distance Between Centers	26.00
Speed Radio	1 : 1
Maximum Drilling Capability	Ø9
Maximum Tapping Capability	M8
Spindle	2 ~ 4

**** All dimension are given in millimeters.

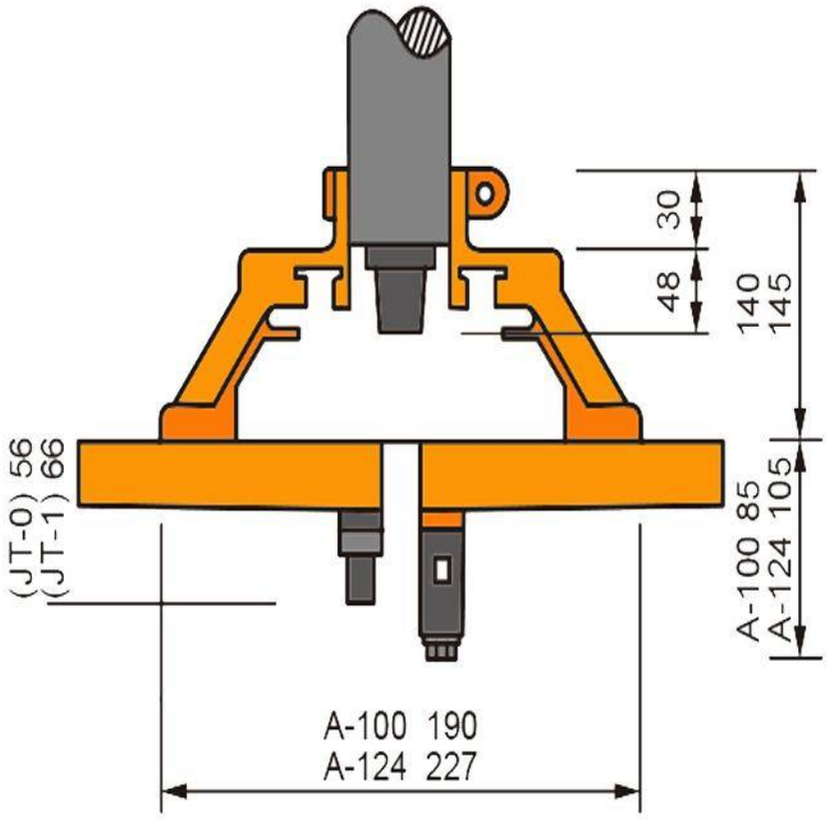

CT SERIES: TAPPING TYPE

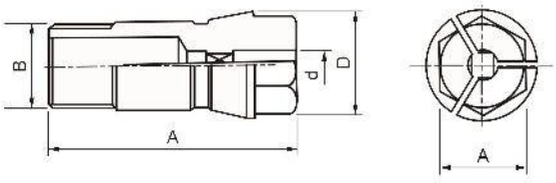

C SERIES: DRILLING TYPE

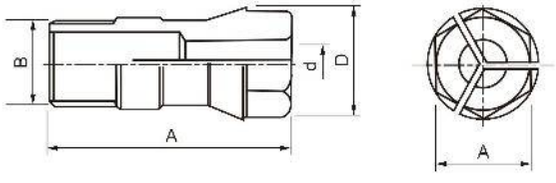

A-124S

Drilling & Tapping Multi Spindle Heads



Characteristics & Dimensions

MODEL	A-124S
Nozzle	C-12
Minimum Distance Between Centers	124.00
Maximum Distance Between Centers	28.00
Speed Radio	1 : 1
Maximum Drilling Capability	Ø12
Maximum Tapping Capability	M12
Spindle	2 ~ 4

**** All dimension are given in millimeters.

Characteristics & Dimensions

TAPPING NOZZLES

MODEL	Ød	ØD	ØL	B	A	Ø CAPACITY
CT-4	2.00 ~ 4.00	8.20	24.00	1/4 - 28UNF	6.00	M3.50 x 0.60
CT-5	2.00 ~ 5.00	10.80	31.50	5/16 - 24UNF	8.00	M4 x 0.70
CT-6	2.00 ~ 6.00	13.10	36.00	3/8 - 24UNF	10.00	M6 x 1.00
CT-9	2.00 ~ 7.00	17.00	46.00	1/2 - 20UNF	14.00	M8 x 1.25
CT-12	3.00 ~ 9.00	21.00	50.00	5/8 - 18UNF	17.00	M12 x 1.75
CT-14	3.00 ~ 12.00	24.50	54.00	3/4 - 16UNF	21.00	M14 x 2.00
CT-16	3.00 ~ 14.00	31.00	70.00	M24 - 2.00	26.00	M18 x 2.50
NT-1	2.00 ~ 5.00	8.20	30.10	1/4 - 28UNF	7.00	M4 x 0.70

DRILLING NOZZLES

MODEL	Ød	ØD	ØL	B	A	Ø CAPACITY
C-4	2.00 ~ 4.00	8.20	24.00	1/4 - 28UNF	6.00	4.00
C-5	2.00 ~ 5.00	10.80	31.50	5/16 - 24UNF	8.00	5.00
C-6	2.00 ~ 6.00	13.10	36.00	3/8 - 24UNF	10.00	6.00
C-9	2.00 ~ 7.00	17.00	46.00	1/2 - 20UNF	14.00	9
C-12	3.00 ~ 9.00	21.00	50.00	5/8 - 18UNF	17.00	12.00
C-14	3.00 ~ 12.00	24.50	54.00	3/4 - 16UNF	21.00	14.00
C-16	3.00 ~ 14.00	31.00	70.00	M24 - 2.00	26.00	16.00
NT-1	3.00 ~ 12.00	8.20	30.10	1/4 - 28UNF	7.00	5.00

**** All dimension are given in millimeters.

D1 SERIES

DRILLING/TAPPING MULTI SPINDLE HEADS

D-170

Drilling & Tapping Multi Spindle Heads



Characteristics & Dimensions

MODEL	D-170
Nozzle	*C-9*
Minimum Distance Between Centers	*170.00*
Maximum Distance Between Centers	*38.00*
Speed Radio	*1 : 1.69*
Maximum Drilling Capability	*Ø9*
Maximum Tapping Capability	*M8*
Spindle	*2.00*

***** All dimension are given in millimeters.*

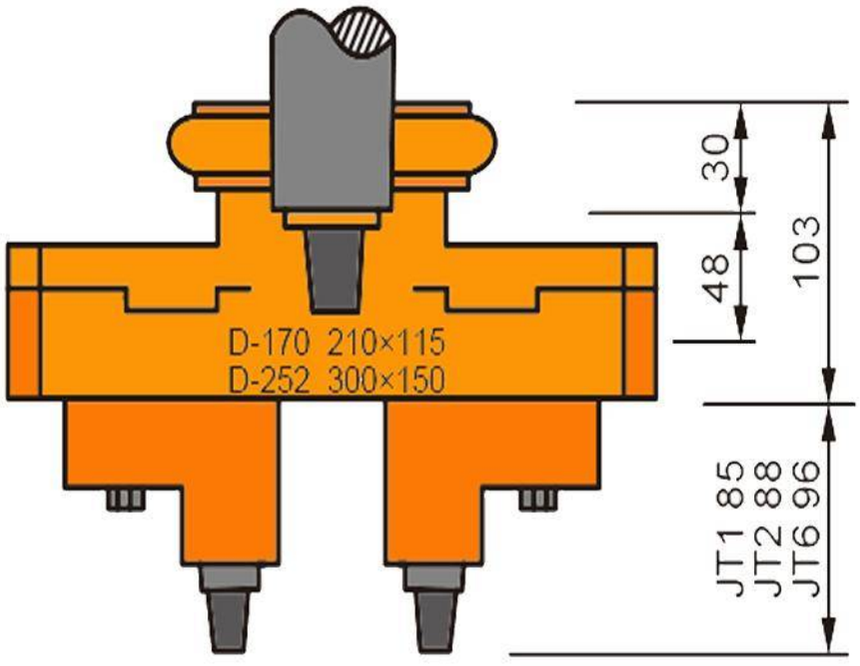

CT SERIES: TAPPING TYPE

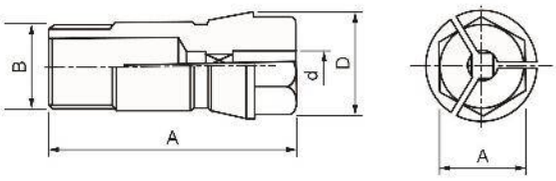

C SERIES: DRILLING TYPE

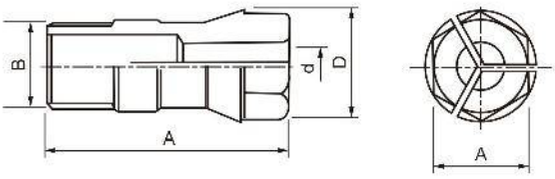

Characteristics & Dimensions

TAPPING NOZZLES

MODEL	Ød	ØD	ØL	B	A	Ø CAPACITY
CT-4	2.00 ~ 4.00	8.20	24.00	1/4 - 28UNF	6.00	M3.50 x 0.60
CT-5	2.00 ~ 5.00	10.80	31.50	5/16 - 24UNF	8.00	M4 x 0.70
CT-6	2.00 ~ 6.00	13.10	36.00	3/8 - 24UNF	10.00	M6 x 1.00
CT-9	2.00 ~ 7.00	17.00	46.00	1/2 - 20UNF	14.00	M8 x 1.25
CT-12	3.00 ~ 9.00	21.00	50.00	5/8 - 18UNF	17.00	M12 x 1.75
CT-14	3.00 ~ 12.00	24.50	54.00	3/4 - 16UNF	21.00	M14 x 2.00
CT-16	3.00 ~ 14.00	31.00	70.00	M24 - 2.00	26.00	M18 x 2.50
NT-1	2.00 ~ 5.00	8.20	30.10	1/4 - 28UNF	7.00	M4 x 0.70

DRILLING NOZZLES

MODEL	Ød	ØD	ØL	B	A	Ø CAPACITY
C-4	2.00 ~ 4.00	8.20	24.00	1/4 - 28UNF	6.00	4.00
C-5	2.00 ~ 5.00	10.80	31.50	5/16 - 24UNF	8.00	5.00
C-6	2.00 ~ 6.00	13.10	36.00	3/8 - 24UNF	10.00	6.00
C-9	2.00 ~ 7.00	17.00	46.00	1/2 - 20UNF	14.00	9
C-12	3.00 ~ 9.00	21.00	50.00	5/8 - 18UNF	17.00	12.00
C-14	3.00 ~ 12.00	24.50	54.00	3/4 - 16UNF	21.00	14.00
C-16	3.00 ~ 14.00	31.00	70.00	M24 - 2.00	26.00	16.00
NT-1	3.00 ~ 12.00	8.20	30.10	1/4 - 28UNF	7.00	5.00

**** All dimension are given in millimeters.

D-176

Drilling & Tapping Multi Spindle Heads



Characteristics & Dimensions

MODEL	D-176
Nozzle	*C-12*
Minimum Distance Between Centers	*176.00*
Maximum Distance Between Centers	*46.00*
Speed Radio	*1 : 1.35*
Maximum Drilling Capability	*Ø12*
Maximum Tapping Capability	*M12*
Spindle	*2.00*

***** All dimension are given in millimeters.*

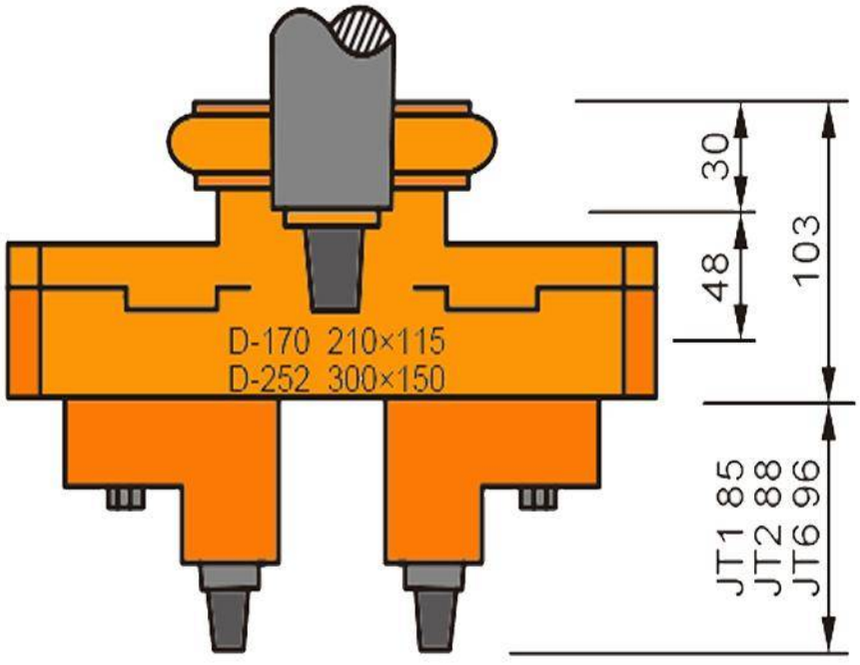

CT SERIES: TAPPING TYPE

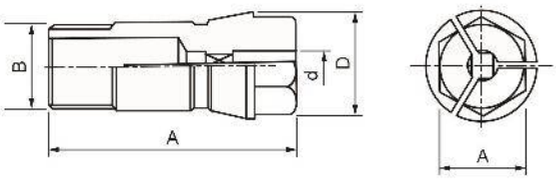

C SERIES: DRILLING TYPE

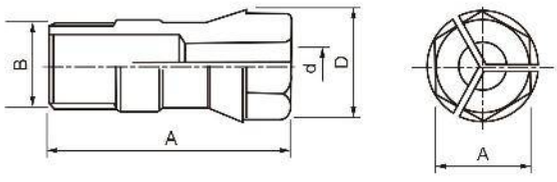

Characteristics & Dimensions

TAPPING NOZZLES

MODEL	Ød	ØD	ØL	B	A	Ø CAPACITY
CT-4	2.00 ~ 4.00	8.20	24.00	1/4 - 28UNF	6.00	M3.50 x 0.60
CT-5	2.00 ~ 5.00	10.80	31.50	5/16 - 24UNF	8.00	M4 x 0.70
CT-6	2.00 ~ 6.00	13.10	36.00	3/8 - 24UNF	10.00	M6 x 1.00
CT-9	2.00 ~ 7.00	17.00	46.00	1/2 - 20UNF	14.00	M8 x 1.25
CT-12	3.00 ~ 9.00	21.00	50.00	5/8 - 18UNF	17.00	M12 x 1.75
CT-14	3.00 ~ 12.00	24.50	54.00	3/4 - 16UNF	21.00	M14 x 2.00
CT-16	3.00 ~ 14.00	31.00	70.00	M24 - 2.00	26.00	M18 x 2.50
NT-1	2.00 ~ 5.00	8.20	30.10	1/4 - 28UNF	7.00	M4 x 0.70

DRILLING NOZZLES

MODEL	Ød	ØD	ØL	B	A	Ø CAPACITY
C-4	2.00 ~ 4.00	8.20	24.00	1/4 - 28UNF	6.00	4.00
C-5	2.00 ~ 5.00	10.80	31.50	5/16 - 24UNF	8.00	5.00
C-6	2.00 ~ 6.00	13.10	36.00	3/8 - 24UNF	10.00	6.00
C-9	2.00 ~ 7.00	17.00	46.00	1/2 - 20UNF	14.00	9
C-12	3.00 ~ 9.00	21.00	50.00	5/8 - 18UNF	17.00	12.00
C-14	3.00 ~ 12.00	24.50	54.00	3/4 - 16UNF	21.00	14.00
C-16	3.00 ~ 14.00	31.00	70.00	M24 - 2.00	26.00	16.00
NT-1	3.00 ~ 12.00	8.20	30.10	1/4 - 28UNF	7.00	5.00

**** All dimension are given in millimeters.

D-183

Drilling & Tapping Multi Spindle Heads



Characteristics & Dimensions

MODEL	D-183
Nozzle	*C-12*
Minimum Distance Between Centers	*183.00*
Maximum Distance Between Centers	*56.00*
Speed Radio	*1 : 1*
Maximum Drilling Capability	*Ø12*
Maximum Tapping Capability	*M12*
Spindle	*2.00*

***** All dimension are given in millimeters.*

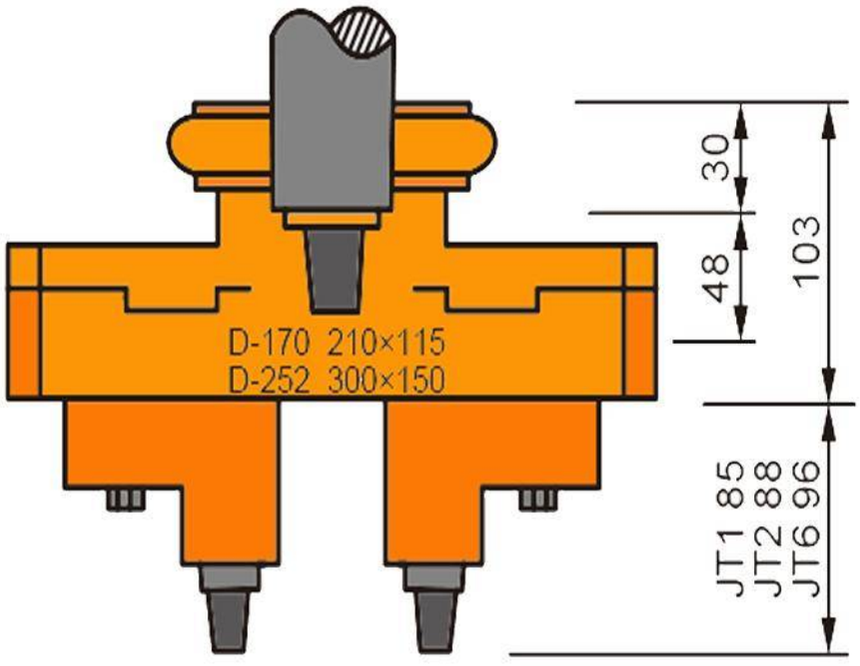

CT SERIES: TAPPING TYPE

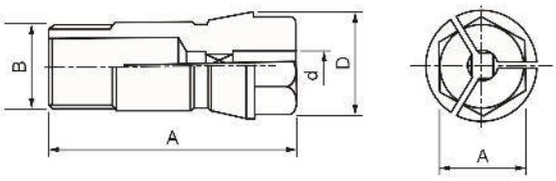

C SERIES: DRILLING TYPE

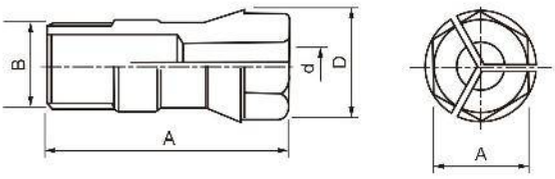

Characteristics & Dimensions

TAPPING NOZZLES

MODEL	Ød	ØD	ØL	B	A	Ø CAPACITY
CT-4	2.00 ~ 4.00	8.20	24.00	1/4 - 28UNF	6.00	M3.50 x 0.60
CT-5	2.00 ~ 5.00	10.80	31.50	5/16 - 24UNF	8.00	M4 x 0.70
CT-6	2.00 ~ 6.00	13.10	36.00	3/8 - 24UNF	10.00	M6 x 1.00
CT-9	2.00 ~ 7.00	17.00	46.00	1/2 - 20UNF	14.00	M8 x 1.25
CT-12	3.00 ~ 9.00	21.00	50.00	5/8 - 18UNF	17.00	M12 x 1.75
CT-14	3.00 ~ 12.00	24.50	54.00	3/4 - 16UNF	21.00	M14 x 2.00
CT-16	3.00 ~ 14.00	31.00	70.00	M24 - 2.00	26.00	M18 x 2.50
NT-1	2.00 ~ 5.00	8.20	30.10	1/4 - 28UNF	7.00	M4 x 0.70

DRILLING NOZZLES

MODEL	Ød	ØD	ØL	B	A	Ø CAPACITY
C-4	2.00 ~ 4.00	8.20	24.00	1/4 - 28UNF	6.00	4.00
C-5	2.00 ~ 5.00	10.80	31.50	5/16 - 24UNF	8.00	5.00
C-6	2.00 ~ 6.00	13.10	36.00	3/8 - 24UNF	10.00	6.00
C-9	2.00 ~ 7.00	17.00	46.00	1/2 - 20UNF	14.00	9
C-12	3.00 ~ 9.00	21.00	50.00	5/8 - 18UNF	17.00	12.00
C-14	3.00 ~ 12.00	24.50	54.00	3/4 - 16UNF	21.00	14.00
C-16	3.00 ~ 14.00	31.00	70.00	M24 - 2.00	26.00	16.00
NT-1	3.00 ~ 12.00	8.20	30.10	1/4 - 28UNF	7.00	5.00

**** All dimension are given in millimeters.

D2 SERIES

DRILLING/TAPPING MULTI SPINDLE HEADS

D-177

Drilling & Tapping Multi Spindle Heads



Characteristics & Dimensions

MODEL	D-177 (D-192)
Nozzle	*C-9*
Minimum Distance Between Centers	*177.00*
Maximum Distance Between Centers	*37.00*
Speed Radio	*1 : 3*
Maximum Drilling Capability	*Ø9*
Maximum Tapping Capability	*M8*
Spindle	*2 ~ 4*

***** All dimension are given in millimeters.*

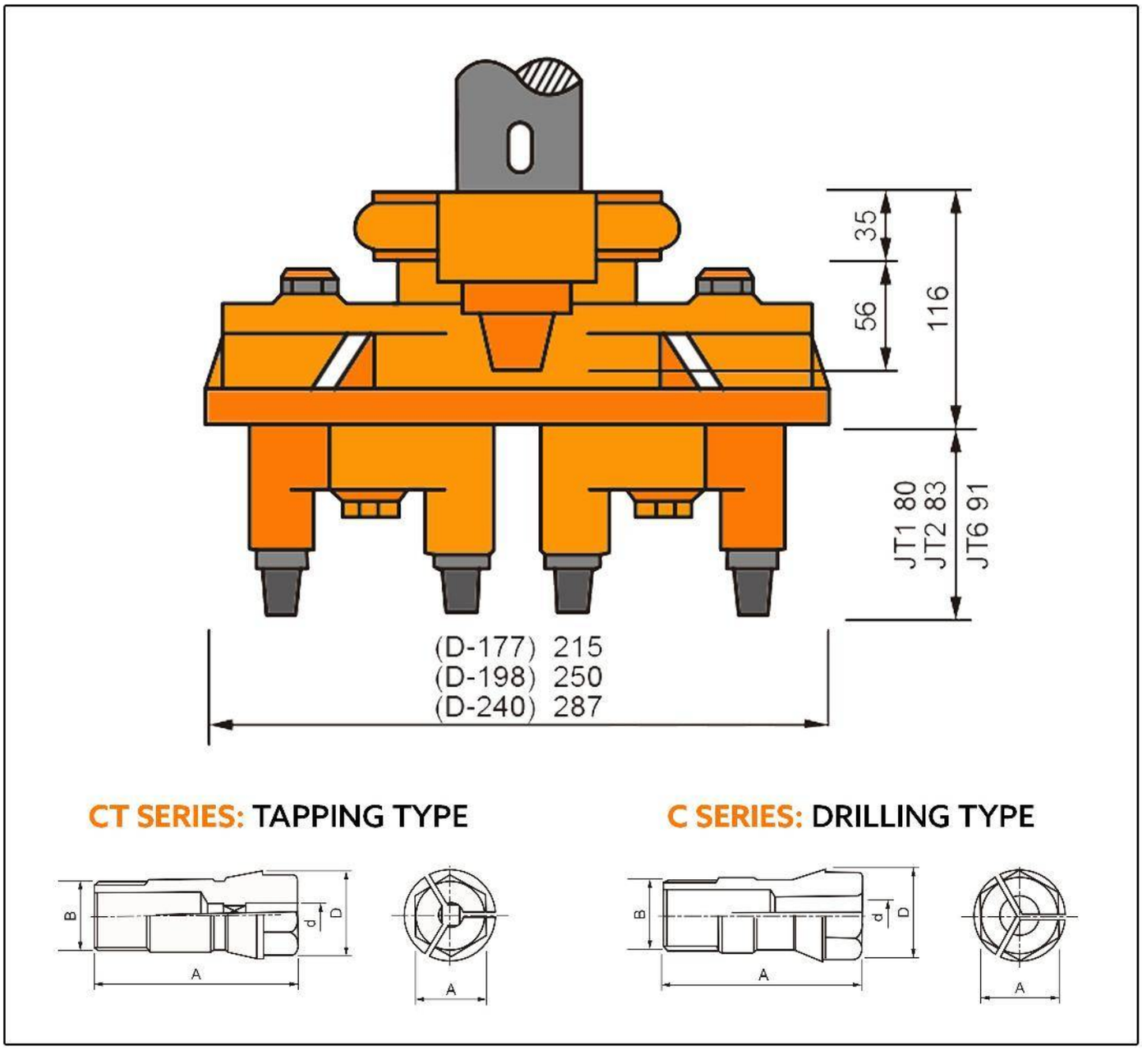
35
56
116
JT1 80
JT2 83
JT6 91
(D-177) 215
(D-198) 250
(D-240) 287
CT SERIES: TAPPING TYPE
C SERIES: DRILLING TYPE
B
d
D
A
A
B
d
D
A
A

Characteristics & Dimensions

TAPPING NOZZLES

MODEL	Ød	ØD	ØL	B	A	Ø CAPACITY
CT-4	2.00 ~ 4.00	8.20	24.00	1/4 - 28UNF	6.00	M3.50 x 0.60
CT-5	2.00 ~ 5.00	10.80	31.50	5/16 - 24UNF	8.00	M4 x 0.70
CT-6	2.00 ~ 6.00	13.10	36.00	3/8 - 24UNF	10.00	M6 x 1.00
CT-9	2.00 ~ 7.00	17.00	46.00	1/2 - 20UNF	14.00	M8 x 1.25
CT-12	3.00 ~ 9.00	21.00	50.00	5/8 - 18UNF	17.00	M12 x 1.75
CT-14	3.00 ~ 12.00	24.50	54.00	3/4 - 16UNF	21.00	M14 x 2.00
CT-16	3.00 ~ 14.00	31.00	70.00	M24 - 2.00	26.00	M18 x 2.50
NT-1	2.00 ~ 5.00	8.20	30.10	1/4 - 28UNF	7.00	M4 x 0.70

DRILLING NOZZLES

MODEL	Ød	ØD	ØL	B	A	Ø CAPACITY
C-4	2.00 ~ 4.00	8.20	24.00	1/4 - 28UNF	6.00	4.00
C-5	2.00 ~ 5.00	10.80	31.50	5/16 - 24UNF	8.00	5.00
C-6	2.00 ~ 6.00	13.10	36.00	3/8 - 24UNF	10.00	6.00
C-9	2.00 ~ 7.00	17.00	46.00	1/2 - 20UNF	14.00	9
C-12	3.00 ~ 9.00	21.00	50.00	5/8 - 18UNF	17.00	12.00
C-14	3.00 ~ 12.00	24.50	54.00	3/4 - 16UNF	21.00	14.00
C-16	3.00 ~ 14.00	31.00	70.00	M24 - 2.00	26.00	16.00
NT-1	3.00 ~ 12.00	8.20	30.10	1/4 - 28UNF	7.00	5.00

**** All dimension are given in millimeters.

D-198

Drilling & Tapping Multi Spindle Heads



Characteristics & Dimensions

MODEL	D-198
Nozzle	C-12
Minimum Distance Between Centers	198.00
Maximum Distance Between Centers	45.00
Speed Radio	1 : 2.9
Maximum Drilling Capability	Ø12
Maximum Tapping Capability	M12
Spindle	2 ~ 4

**** All dimension are given in millimeters.

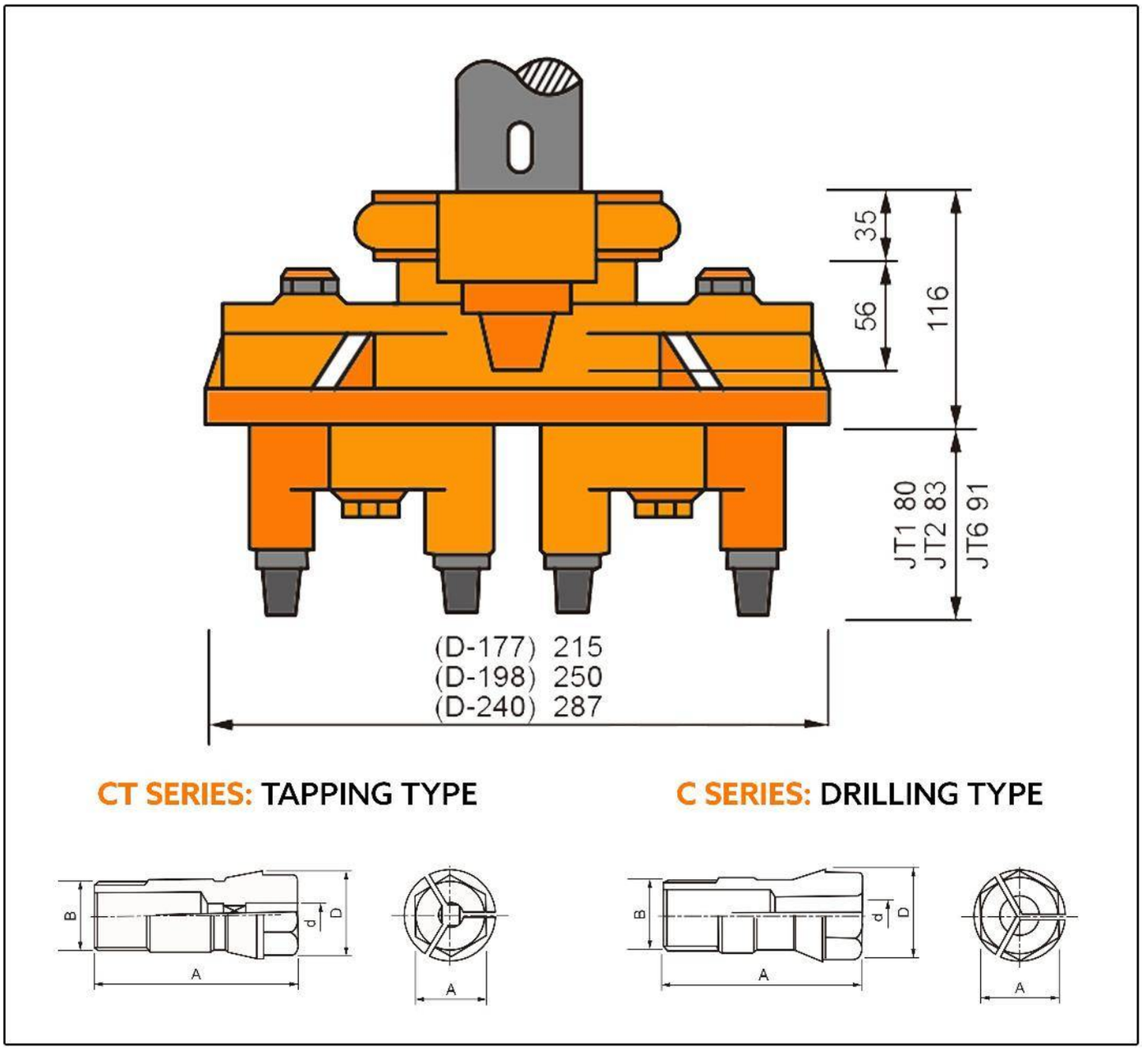
35
56
116
JT1 80
JT2 83
JT6 91
(D-177) 215
(D-198) 250
(D-240) 287
CT SERIES: TAPPING TYPE
C SERIES: DRILLING TYPE
B
d
D
A
A
B
d
D
A
A

Characteristics & Dimensions

TAPPING NOZZLES

MODEL	Ød	ØD	ØL	B	A	Ø CAPACITY
CT-4	2.00 ~ 4.00	8.20	24.00	1/4 - 28UNF	6.00	M3.50 x 0.60
CT-5	2.00 ~ 5.00	10.80	31.50	5/16 - 24UNF	8.00	M4 x 0.70
CT-6	2.00 ~ 6.00	13.10	36.00	3/8 - 24UNF	10.00	M6 x 1.00
CT-9	2.00 ~ 7.00	17.00	46.00	1/2 - 20UNF	14.00	M8 x 1.25
CT-12	3.00 ~ 9.00	21.00	50.00	5/8 - 18UNF	17.00	M12 x 1.75
CT-14	3.00 ~ 12.00	24.50	54.00	3/4 - 16UNF	21.00	M14 x 2.00
CT-16	3.00 ~ 14.00	31.00	70.00	M24 - 2.00	26.00	M18 x 2.50
NT-1	2.00 ~ 5.00	8.20	30.10	1/4 - 28UNF	7.00	M4 x 0.70

DRILLING NOZZLES

MODEL	Ød	ØD	ØL	B	A	Ø CAPACITY
C-4	2.00 ~ 4.00	8.20	24.00	1/4 - 28UNF	6.00	4.00
C-5	2.00 ~ 5.00	10.80	31.50	5/16 - 24UNF	8.00	5.00
C-6	2.00 ~ 6.00	13.10	36.00	3/8 - 24UNF	10.00	6.00
C-9	2.00 ~ 7.00	17.00	46.00	1/2 - 20UNF	14.00	9
C-12	3.00 ~ 9.00	21.00	50.00	5/8 - 18UNF	17.00	12.00
C-14	3.00 ~ 12.00	24.50	54.00	3/4 - 16UNF	21.00	14.00
C-16	3.00 ~ 14.00	31.00	70.00	M24 - 2.00	26.00	16.00
NT-1	3.00 ~ 12.00	8.20	30.10	1/4 - 28UNF	7.00	5.00

**** All dimension are given in millimeters.

D-240

Drilling & Tapping Multi Spindle Heads



Characteristics & Dimensions

MODEL	D-240
Nozzle	C-12
Minimum Distance Between Centers	240.00
Maximum Distance Between Centers	55.00
Speed Radio	1 : 3.2
Maximum Drilling Capability	Ø12
Maximum Tapping Capability	M12
Spindle	2 ~ 4

**** All dimension are given in millimeters.

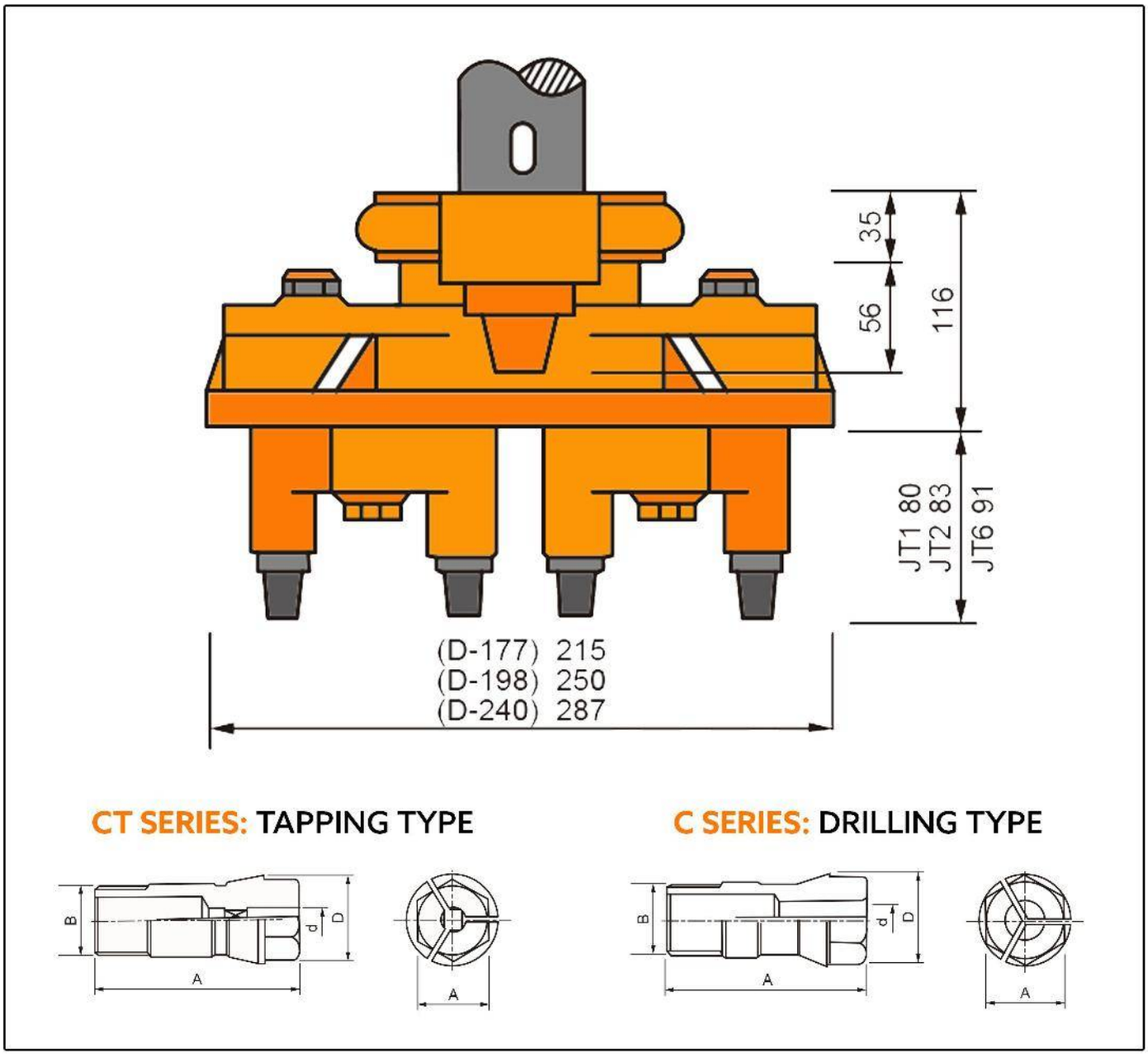
35
56
116
JT1 80
JT2 83
JT6 91
(D-177) 215
(D-198) 250
(D-240) 287
CT SERIES: TAPPING TYPE
C SERIES: DRILLING TYPE
B
d
D
A
A
B
d
D
A
A

Characteristics & Dimensions

TAPPING NOZZLES

MODEL	Ød	ØD	ØL	B	A	Ø CAPACITY
CT-4	2.00 ~ 4.00	8.20	24.00	1/4 - 28UNF	6.00	M3.50 x 0.60
CT-5	2.00 ~ 5.00	10.80	31.50	5/16 - 24UNF	8.00	M4 x 0.70
CT-6	2.00 ~ 6.00	13.10	36.00	3/8 - 24UNF	10.00	M6 x 1.00
CT-9	2.00 ~ 7.00	17.00	46.00	1/2 - 20UNF	14.00	M8 x 1.25
CT-12	3.00 ~ 9.00	21.00	50.00	5/8 - 18UNF	17.00	M12 x 1.75
CT-14	3.00 ~ 12.00	24.50	54.00	3/4 - 16UNF	21.00	M14 x 2.00
CT-16	3.00 ~ 14.00	31.00	70.00	M24 - 2.00	26.00	M18 x 2.50
NT-1	2.00 ~ 5.00	8.20	30.10	1/4 - 28UNF	7.00	M4 x 0.70

DRILLING NOZZLES

MODEL	Ød	ØD	ØL	B	A	Ø CAPACITY
C-4	2.00 ~ 4.00	8.20	24.00	1/4 - 28UNF	6.00	4.00
C-5	2.00 ~ 5.00	10.80	31.50	5/16 - 24UNF	8.00	5.00
C-6	2.00 ~ 6.00	13.10	36.00	3/8 - 24UNF	10.00	6.00
C-9	2.00 ~ 7.00	17.00	46.00	1/2 - 20UNF	14.00	9
C-12	3.00 ~ 9.00	21.00	50.00	5/8 - 18UNF	17.00	12.00
C-14	3.00 ~ 12.00	24.50	54.00	3/4 - 16UNF	21.00	14.00
C-16	3.00 ~ 14.00	31.00	70.00	M24 - 2.00	26.00	16.00
NT-1	3.00 ~ 12.00	8.20	30.10	1/4 - 28UNF	7.00	5.00

**** All dimension are given in millimeters.

T/NT SERIES

DRILLING/TAPPING MULTI SPINDLE HEADS

T-71

Drilling & Tapping Multi Spindle Heads



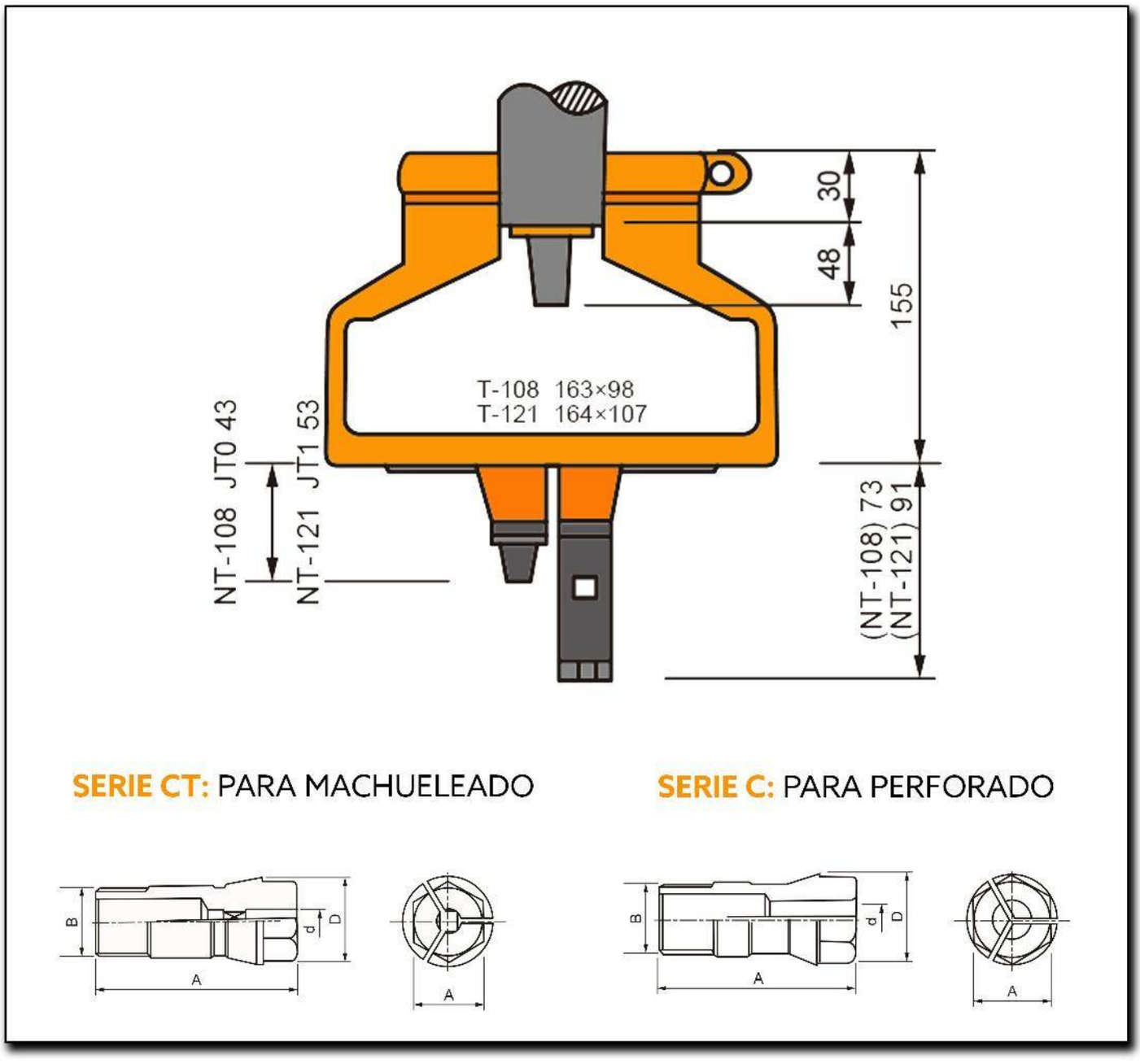
30
48
155
T-108 163×98
T-121 164×107
NT-108 JT0 43
NT-121 JT1 53
(NT-108) 73
(NT-121) 91
SERIE CT: PARA MACHUELEADO
SERIE C: PARA PERFORADO
B
d
D
A
B
d
D
A
A

Characteristics & Dimensions

MODEL	T-71
Nozzle	*N-1*
Minimum Distance Between Centers	*71.00*
Maximum Distance Between Centers	*10.00*
Speed Radio	*1 : 1*
Maximum Drilling Capability	*Ø5*
Maximum Tapping Capability	*M4*
Spindle	*2.00*

***** All dimension are given in millimeters.*

Characteristics & Dimensions

TAPPING NOZZLES

MODEL	Ød	ØD	ØL	B	A	Ø CAPACITY
CT-4	2.00 ~ 4.00	8.20	24.00	1/4 - 28UNF	6.00	M3.50 x 0.60
CT-5	2.00 ~ 5.00	10.80	31.50	5/16 - 24UNF	8.00	M4 x 0.70
CT-6	2.00 ~ 6.00	13.10	36.00	3/8 - 24UNF	10.00	M6 x 1.00
CT-9	2.00 ~ 7.00	17.00	46.00	1/2 - 20UNF	14.00	M8 x 1.25
CT-12	3.00 ~ 9.00	21.00	50.00	5/8 - 18UNF	17.00	M12 x 1.75
CT-14	3.00 ~ 12.00	24.50	54.00	3/4 - 16UNF	21.00	M14 x 2.00
CT-16	3.00 ~ 14.00	31.00	70.00	M24 - 2.00	26.00	M18 x 2.50
NT-1	2.00 ~ 5.00	8.20	30.10	1/4 - 28UNF	7.00	M4 x 0.70

DRILLING NOZZLES

MODEL	Ød	ØD	ØL	B	A	Ø CAPACITY
C-4	2.00 ~ 4.00	8.20	24.00	1/4 - 28UNF	6.00	4.00
C-5	2.00 ~ 5.00	10.80	31.50	5/16 - 24UNF	8.00	5.00
C-6	2.00 ~ 6.00	13.10	36.00	3/8 - 24UNF	10.00	6.00
C-9	2.00 ~ 7.00	17.00	46.00	1/2 - 20UNF	14.00	9
C-12	3.00 ~ 9.00	21.00	50.00	5/8 - 18UNF	17.00	12.00
C-14	3.00 ~ 12.00	24.50	54.00	3/4 - 16UNF	21.00	14.00
C-16	3.00 ~ 14.00	31.00	70.00	M24 - 2.00	26.00	16.00
NT-1	3.00 ~ 12.00	8.20	30.10	1/4 - 28UNF	7.00	5.00

**** All dimension are given in millimeters.

T-74

Drilling & Tapping Multi Spindle Heads



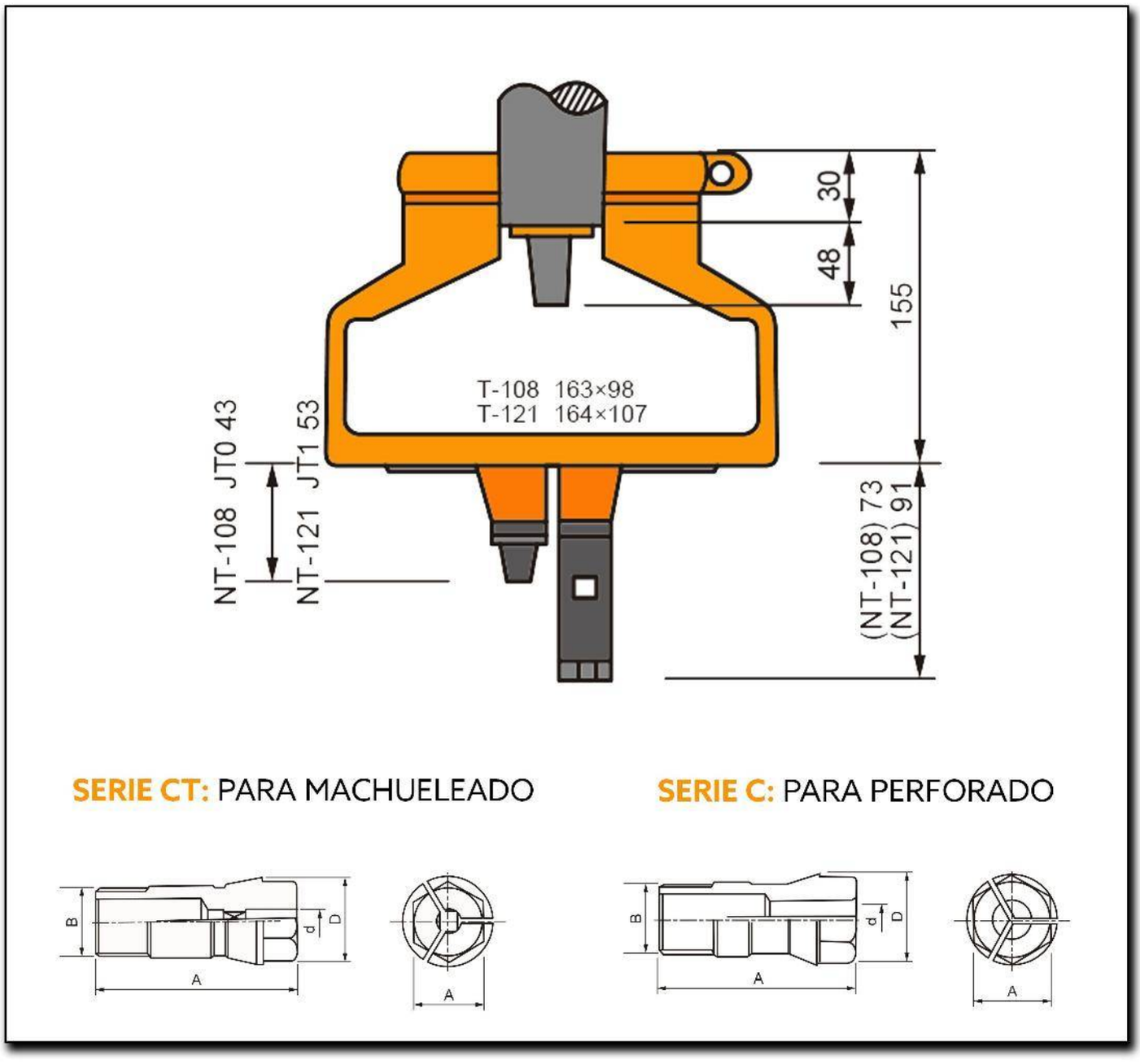
30
48
155
T-108 163×98
T-121 164×107
NT-108 JT0 43
NT-121 JT1 53
(NT-108) 73
(NT-121) 91
SERIE CT: PARA MACHUELEADO
SERIE C: PARA PERFORADO
B
d
D
A
B
d
D
A

Characteristics & Dimensions

MODEL	T-74
Nozzle	*C-5*
Minimum Distance Between Centers	*74.00*
Maximum Distance Between Centers	*12.00*
Speed Radio	*1 : 1*
Maximum Drilling Capability	*Ø5*
Maximum Tapping Capability	*M4*
Spindle	*2.00*

***** All dimension are given in millimeters.*

Characteristics & Dimensions

TAPPING NOZZLES

MODEL	Ød	ØD	ØL	B	A	Ø CAPACITY
CT-4	2.00 ~ 4.00	8.20	24.00	1/4 - 28UNF	6.00	M3.50 x 0.60
CT-5	2.00 ~ 5.00	10.80	31.50	5/16 - 24UNF	8.00	M4 x 0.70
CT-6	2.00 ~ 6.00	13.10	36.00	3/8 - 24UNF	10.00	M6 x 1.00
CT-9	2.00 ~ 7.00	17.00	46.00	1/2 - 20UNF	14.00	M8 x 1.25
CT-12	3.00 ~ 9.00	21.00	50.00	5/8 - 18UNF	17.00	M12 x 1.75
CT-14	3.00 ~ 12.00	24.50	54.00	3/4 - 16UNF	21.00	M14 x 2.00
CT-16	3.00 ~ 14.00	31.00	70.00	M24 - 2.00	26.00	M18 x 2.50
NT-1	2.00 ~ 5.00	8.20	30.10	1/4 - 28UNF	7.00	M4 x 0.70

DRILLING NOZZLES

MODEL	Ød	ØD	ØL	B	A	Ø CAPACITY
C-4	2.00 ~ 4.00	8.20	24.00	1/4 - 28UNF	6.00	4.00
C-5	2.00 ~ 5.00	10.80	31.50	5/16 - 24UNF	8.00	5.00
C-6	2.00 ~ 6.00	13.10	36.00	3/8 - 24UNF	10.00	6.00
C-9	2.00 ~ 7.00	17.00	46.00	1/2 - 20UNF	14.00	9
C-12	3.00 ~ 9.00	21.00	50.00	5/8 - 18UNF	17.00	12.00
C-14	3.00 ~ 12.00	24.50	54.00	3/4 - 16UNF	21.00	14.00
C-16	3.00 ~ 14.00	31.00	70.00	M24 - 2.00	26.00	16.00
NT-1	3.00 ~ 12.00	8.20	30.10	1/4 - 28UNF	7.00	5.00

**** All dimension are given in millimeters.

NT-108

Drilling & Tapping Multi Spindle Heads



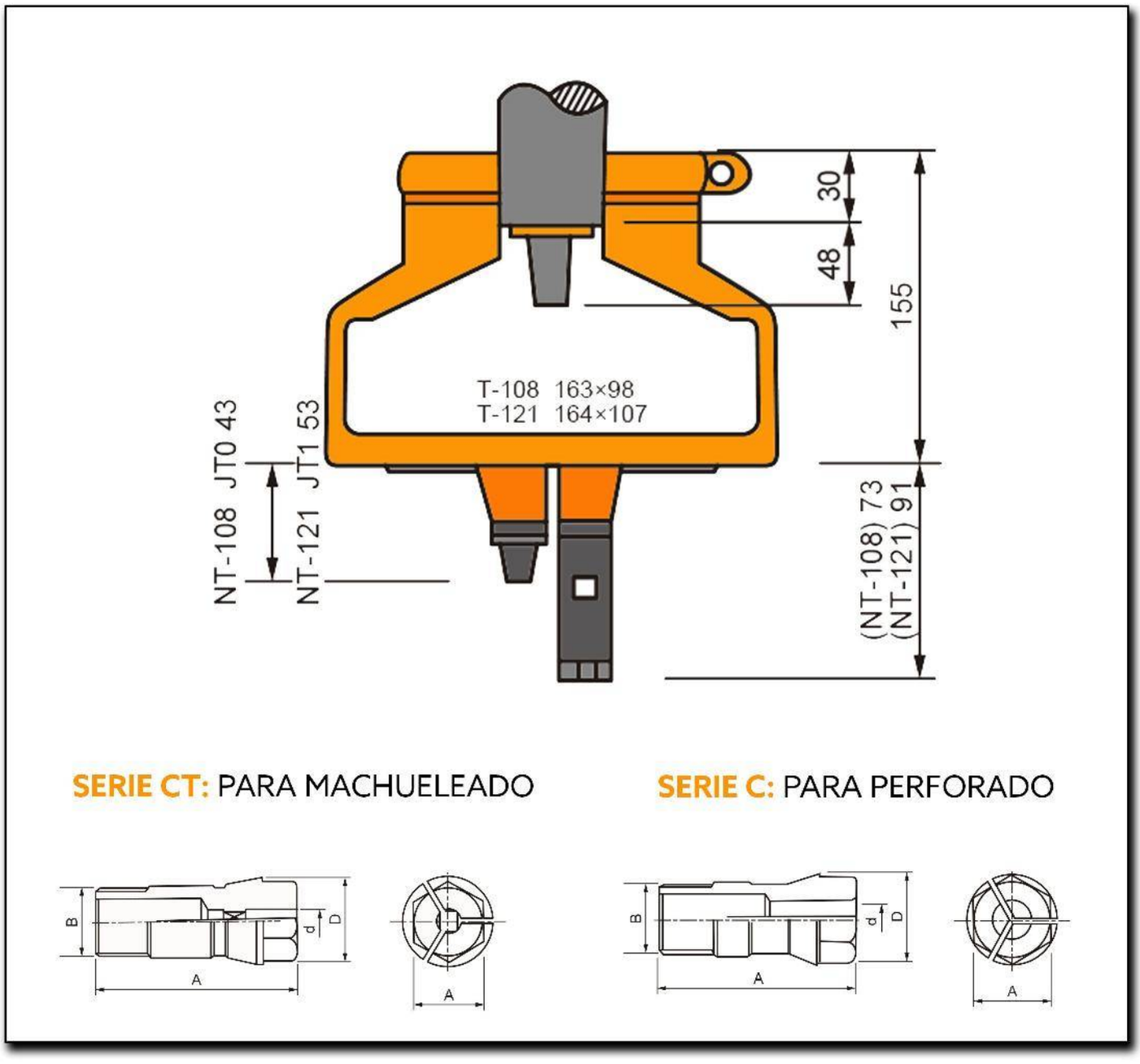
30
48
155
T-108 163×98
T-121 164×107
NT-108 JT0 43
NT-121 JT1 53
(NT-108) 73
(NT-121) 91
SERIE CT: PARA MACHUELEADO
SERIE C: PARA PERFORADO
B
d
D
A
B
d
D
A
A

Characteristics & Dimensions

MODEL	NT-108
Nozzle	C-6
Minimum Distance Between Centers	108.00
Maximum Distance Between Centers	18.00
Speed Radio	1 : 1
Maximum Drilling Capability	Ø6
Maximum Tapping Capability	M6
Spindle	2.00

**** All dimension are given in millimeters.

Characteristics & Dimensions

TAPPING NOZZLES

MODEL	Ød	ØD	ØL	B	A	Ø CAPACITY
CT-4	2.00 ~ 4.00	8.20	24.00	1/4 - 28UNF	6.00	M3.50 x 0.60
CT-5	2.00 ~ 5.00	10.80	31.50	5/16 - 24UNF	8.00	M4 x 0.70
CT-6	2.00 ~ 6.00	13.10	36.00	3/8 - 24UNF	10.00	M6 x 1.00
CT-9	2.00 ~ 7.00	17.00	46.00	1/2 - 20UNF	14.00	M8 x 1.25
CT-12	3.00 ~ 9.00	21.00	50.00	5/8 - 18UNF	17.00	M12 x 1.75
CT-14	3.00 ~ 12.00	24.50	54.00	3/4 - 16UNF	21.00	M14 x 2.00
CT-16	3.00 ~ 14.00	31.00	70.00	M24 - 2.00	26.00	M18 x 2.50
NT-1	2.00 ~ 5.00	8.20	30.10	1/4 - 28UNF	7.00	M4 x 0.70

DRILLING NOZZLES

MODEL	Ød	ØD	ØL	B	A	Ø CAPACITY
C-4	2.00 ~ 4.00	8.20	24.00	1/4 - 28UNF	6.00	4.00
C-5	2.00 ~ 5.00	10.80	31.50	5/16 - 24UNF	8.00	5.00
C-6	2.00 ~ 6.00	13.10	36.00	3/8 - 24UNF	10.00	6.00
C-9	2.00 ~ 7.00	17.00	46.00	1/2 - 20UNF	14.00	9
C-12	3.00 ~ 9.00	21.00	50.00	5/8 - 18UNF	17.00	12.00
C-14	3.00 ~ 12.00	24.50	54.00	3/4 - 16UNF	21.00	14.00
C-16	3.00 ~ 14.00	31.00	70.00	M24 - 2.00	26.00	16.00
NT-1	3.00 ~ 12.00	8.20	30.10	1/4 - 28UNF	7.00	5.00

**** All dimension are given in millimeters.

NT-121 (C-9)

Drilling & Tapping Multi Spindle Heads



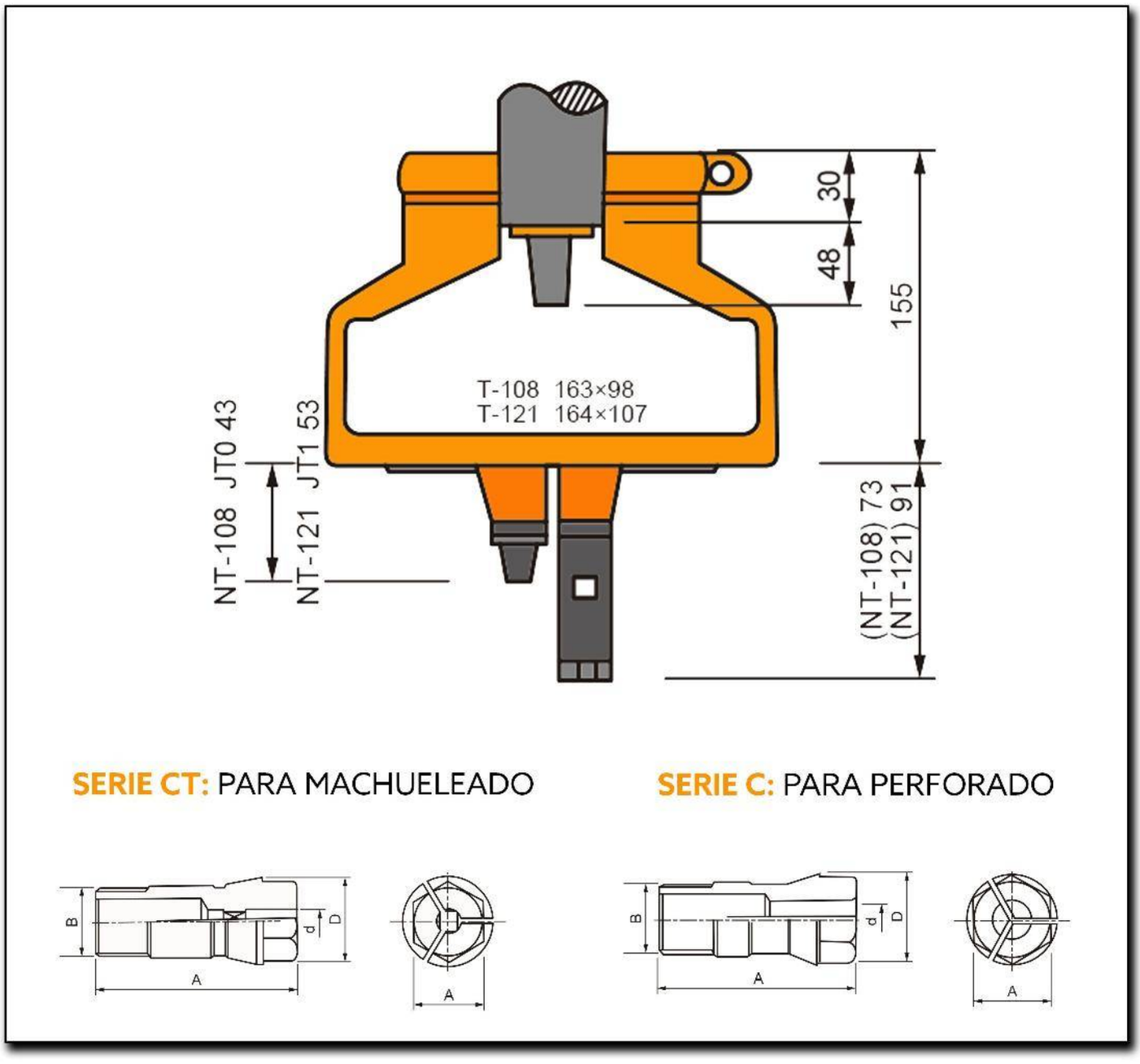
30
48
155
T-108 163×98
T-121 164×107
NT-108 JT0 43
NT-121 JT1 53
(NT-108) 73
(NT-121) 91
SERIE CT: PARA MACHUELEADO
SERIE C: PARA PERFORADO
B
d
D
A
A
B
d
D
A
A

Characteristics & Dimensions

MODEL	NT-121
Nozzle	*C-9*
Minimum Distance Between Centers	*121.00*
Maximum Distance Between Centers	*28.00*
Speed Radio	*1 : 1*
Maximum Drilling Capability	*Ø9*
Maximum Tapping Capability	*M8*
Spindle	*2.00*

***** All dimension are given in millimeters.*

Characteristics & Dimensions

TAPPING NOZZLES

MODEL	Ød	ØD	ØL	B	A	Ø CAPACITY
CT-4	2.00 ~ 4.00	8.20	24.00	1/4 - 28UNF	6.00	M3.50 x 0.60
CT-5	2.00 ~ 5.00	10.80	31.50	5/16 - 24UNF	8.00	M4 x 0.70
CT-6	2.00 ~ 6.00	13.10	36.00	3/8 - 24UNF	10.00	M6 x 1.00
CT-9	2.00 ~ 7.00	17.00	46.00	1/2 - 20UNF	14.00	M8 x 1.25
CT-12	3.00 ~ 9.00	21.00	50.00	5/8 - 18UNF	17.00	M12 x 1.75
CT-14	3.00 ~ 12.00	24.50	54.00	3/4 - 16UNF	21.00	M14 x 2.00
CT-16	3.00 ~ 14.00	31.00	70.00	M24 - 2.00	26.00	M18 x 2.50
NT-1	2.00 ~ 5.00	8.20	30.10	1/4 - 28UNF	7.00	M4 x 0.70

DRILLING NOZZLES

MODEL	Ød	ØD	ØL	B	A	Ø CAPACITY
C-4	2.00 ~ 4.00	8.20	24.00	1/4 - 28UNF	6.00	4.00
C-5	2.00 ~ 5.00	10.80	31.50	5/16 - 24UNF	8.00	5.00
C-6	2.00 ~ 6.00	13.10	36.00	3/8 - 24UNF	10.00	6.00
C-9	2.00 ~ 7.00	17.00	46.00	1/2 - 20UNF	14.00	9
C-12	3.00 ~ 9.00	21.00	50.00	5/8 - 18UNF	17.00	12.00
C-14	3.00 ~ 12.00	24.50	54.00	3/4 - 16UNF	21.00	14.00
C-16	3.00 ~ 14.00	31.00	70.00	M24 - 2.00	26.00	16.00
NT-1	3.00 ~ 12.00	8.20	30.10	1/4 - 28UNF	7.00	5.00

**** All dimension are given in millimeters.

NT-121 (C-12)

Drilling & Tapping Multi Spindle Heads



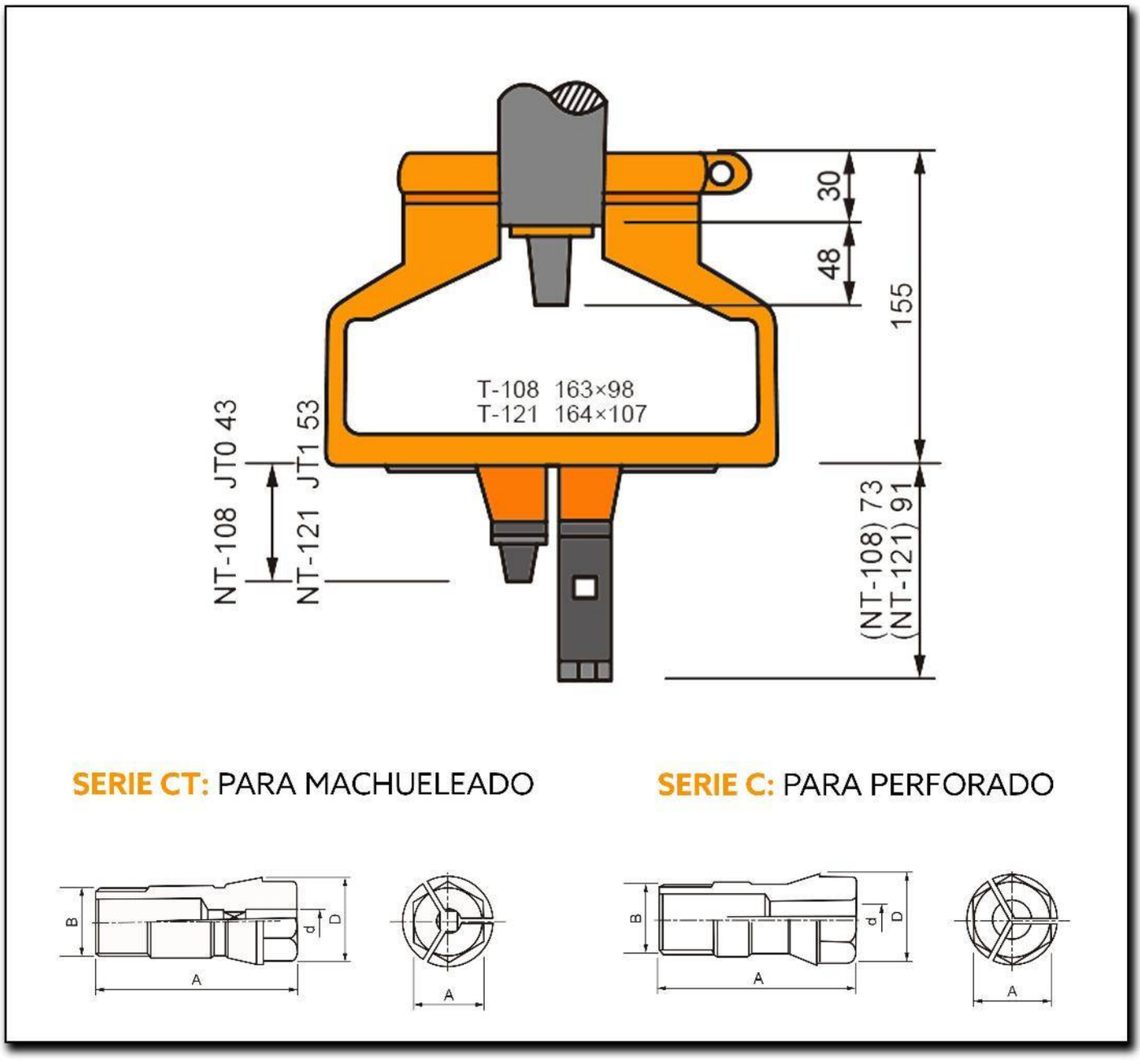
30
48
155
T-108 163×98
T-121 164×107
NT-108 JT0 43
NT-121 JT1 53
(NT-108) 73
(NT-121) 91
SERIE CT: PARA MACHUELEADO
SERIE C: PARA PERFORADO
B
d
D
A
A
B
d
D
A
A

Characteristics & Dimensions

MODEL	NT-121
Nozzle	*C-12*
Minimum Distance Between Centers	*121.00*
Maximum Distance Between Centers	*28.00*
Speed Radio	*1 : 1*
Maximum Drilling Capability	*Ø12*
Maximum Tapping Capability	*M12*
Spindle	*2.00*

***** All dimension are given in millimeters.*

Characteristics & Dimensions

TAPPING NOZZLES

MODEL	Ød	ØD	ØL	B	A	Ø CAPACITY
CT-4	2.00 ~ 4.00	8.20	24.00	1/4 - 28UNF	6.00	M3.50 x 0.60
CT-5	2.00 ~ 5.00	10.80	31.50	5/16 - 24UNF	8.00	M4 x 0.70
CT-6	2.00 ~ 6.00	13.10	36.00	3/8 - 24UNF	10.00	M6 x 1.00
CT-9	2.00 ~ 7.00	17.00	46.00	1/2 - 20UNF	14.00	M8 x 1.25
CT-12	3.00 ~ 9.00	21.00	50.00	5/8 - 18UNF	17.00	M12 x 1.75
CT-14	3.00 ~ 12.00	24.50	54.00	3/4 - 16UNF	21.00	M14 x 2.00
CT-16	3.00 ~ 14.00	31.00	70.00	M24 - 2.00	26.00	M18 x 2.50
NT-1	2.00 ~ 5.00	8.20	30.10	1/4 - 28UNF	7.00	M4 x 0.70

DRILLING NOZZLES

MODEL	Ød	ØD	ØL	B	A	Ø CAPACITY
C-4	2.00 ~ 4.00	8.20	24.00	1/4 - 28UNF	6.00	4.00
C-5	2.00 ~ 5.00	10.80	31.50	5/16 - 24UNF	8.00	5.00
C-6	2.00 ~ 6.00	13.10	36.00	3/8 - 24UNF	10.00	6.00
C-9	2.00 ~ 7.00	17.00	46.00	1/2 - 20UNF	14.00	9
C-12	3.00 ~ 9.00	21.00	50.00	5/8 - 18UNF	17.00	12.00
C-14	3.00 ~ 12.00	24.50	54.00	3/4 - 16UNF	21.00	14.00
C-16	3.00 ~ 14.00	31.00	70.00	M24 - 2.00	26.00	16.00
NT-1	3.00 ~ 12.00	8.20	30.10	1/4 - 28UNF	7.00	5.00

**** All dimension are given in millimeters.

U SERIES

DRILLING/TAPPING MULTI SPINDLE HEADS

U-120

Drilling & Tapping Multi Spindle Heads



Characteristics & Dimensions

MODEL	U-120
Nozzle	*C-5, C-6, C-9, C-12*
Minimum Distance Between Centers	*120.00*
Maximum Distance Between Centers	*C-5(13), C-6(18), C-9(27.5), C-12(30)*
Speed Radio	*1 : 1*
Maximum Drilling Capability	*C-5(Ø5), C-6(Ø6), C-9(Ø9), C-12(Ø12)*
Maximum Tapping Capability	*C-5(M4), C-6(M6), C-9(M9), C-12(M12)*
Spindle	*3 ~ 6*

***** All dimension are given in millimeters.*

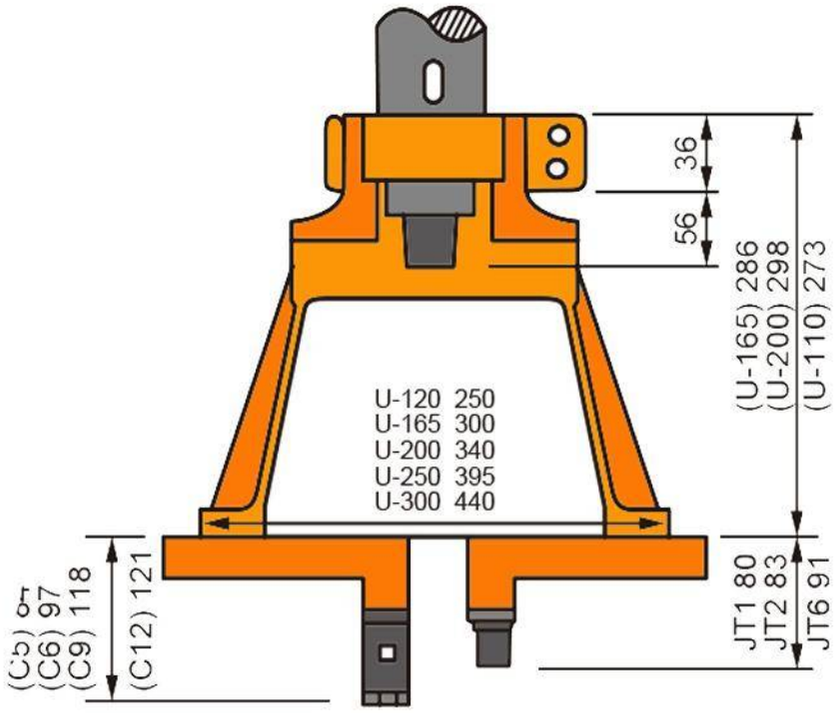

CT SERIES: TAPPING TYPE

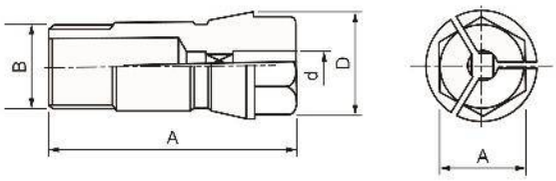

C SERIES: DRILLING TYPE

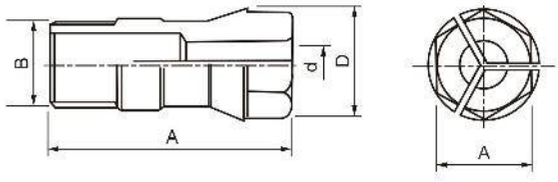

Characteristics & Dimensions

TAPPING NOZZLES

MODEL	Ød	ØD	ØL	B	A	Ø CAPACITY
CT-4	2.00 ~ 4.00	8.20	24.00	1/4 - 28UNF	6.00	M3.50 x 0.60
CT-5	2.00 ~ 5.00	10.80	31.50	5/16 - 24UNF	8.00	M4 x 0.70
CT-6	2.00 ~ 6.00	13.10	36.00	3/8 - 24UNF	10.00	M6 x 1.00
CT-9	2.00 ~ 7.00	17.00	46.00	1/2 - 20UNF	14.00	M8 x 1.25
CT-12	3.00 ~ 9.00	21.00	50.00	5/8 - 18UNF	17.00	M12 x 1.75
CT-14	3.00 ~ 12.00	24.50	54.00	3/4 - 16UNF	21.00	M14 x 2.00
CT-16	3.00 ~ 14.00	31.00	70.00	M24 - 2.00	26.00	M18 x 2.50
NT-1	2.00 ~ 5.00	8.20	30.10	1/4 - 28UNF	7.00	M4 x 0.70

DRILLING NOZZLES

MODEL	Ød	ØD	ØL	B	A	Ø CAPACITY
C-4	2.00 ~ 4.00	8.20	24.00	1/4 - 28UNF	6.00	4.00
C-5	2.00 ~ 5.00	10.80	31.50	5/16 - 24UNF	8.00	5.00
C-6	2.00 ~ 6.00	13.10	36.00	3/8 - 24UNF	10.00	6.00
C-9	2.00 ~ 7.00	17.00	46.00	1/2 - 20UNF	14.00	9
C-12	3.00 ~ 9.00	21.00	50.00	5/8 - 18UNF	17.00	12.00
C-14	3.00 ~ 12.00	24.50	54.00	3/4 - 16UNF	21.00	14.00
C-16	3.00 ~ 14.00	31.00	70.00	M24 - 2.00	26.00	16.00
NT-1	3.00 ~ 12.00	8.20	30.10	1/4 - 28UNF	7.00	5.00

**** All dimension are given in millimeters.

U-165

Drilling & Tapping Multi Spindle Heads



Characteristics & Dimensions

MODEL	U-165
Nozzle	*C-5, C-6, C-9, C-12*
Minimum Distance Between Centers	*165.00*
Maximum Distance Between Centers	*C-5(13), C-6(18), C-9(27.5), C-12(30)*
Speed Radio	*1 : 1*
Maximum Drilling Capability	*C-5(Ø5), C-6(Ø6), C-9(Ø9), C-12(Ø12)*
Maximum Tapping Capability	*C-5(M4), C-6(M6), C-9(M9), C-12(M12)*
Spindle	*4 ~ 10*

***** All dimension are given in millimeters.*

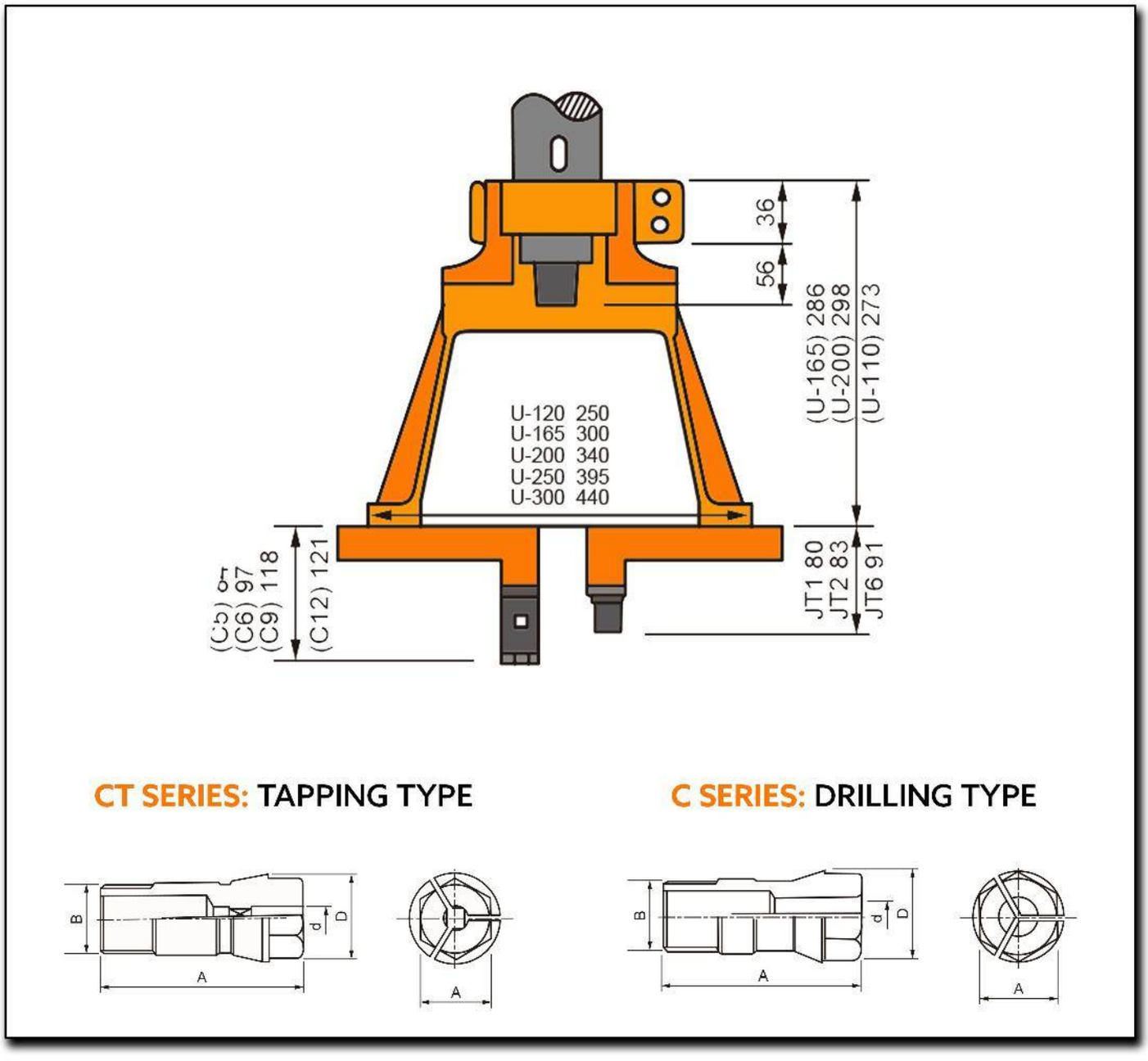
36
56
(U-165) 286
(U-200) 298
(U-110) 273
U-120 250
U-165 300
U-200 340
U-250 395
U-300 440
(C5) 97
(C6) 97
(C9) 118
(C12) 121
JT1 80
JT2 83
JT6 91
CT SERIES: TAPPING TYPE
C SERIES: DRILLING TYPE
B
d
D
A
A
B
d
D
A
A

Characteristics & Dimensions

TAPPING NOZZLES

MODEL	Ød	ØD	ØL	B	A	Ø CAPACITY
CT-4	2.00 ~ 4.00	8.20	24.00	1/4 - 28UNF	6.00	M3.50 x 0.60
CT-5	2.00 ~ 5.00	10.80	31.50	5/16 - 24UNF	8.00	M4 x 0.70
CT-6	2.00 ~ 6.00	13.10	36.00	3/8 - 24UNF	10.00	M6 x 1.00
CT-9	2.00 ~ 7.00	17.00	46.00	1/2 - 20UNF	14.00	M8 x 1.25
CT-12	3.00 ~ 9.00	21.00	50.00	5/8 - 18UNF	17.00	M12 x 1.75
CT-14	3.00 ~ 12.00	24.50	54.00	3/4 - 16UNF	21.00	M14 x 2.00
CT-16	3.00 ~ 14.00	31.00	70.00	M24 - 2.00	26.00	M18 x 2.50
NT-1	2.00 ~ 5.00	8.20	30.10	1/4 - 28UNF	7.00	M4 x 0.70

DRILLING NOZZLES

MODEL	Ød	ØD	ØL	B	A	Ø CAPACITY
C-4	2.00 ~ 4.00	8.20	24.00	1/4 - 28UNF	6.00	4.00
C-5	2.00 ~ 5.00	10.80	31.50	5/16 - 24UNF	8.00	5.00
C-6	2.00 ~ 6.00	13.10	36.00	3/8 - 24UNF	10.00	6.00
C-9	2.00 ~ 7.00	17.00	46.00	1/2 - 20UNF	14.00	9
C-12	3.00 ~ 9.00	21.00	50.00	5/8 - 18UNF	17.00	12.00
C-14	3.00 ~ 12.00	24.50	54.00	3/4 - 16UNF	21.00	14.00
C-16	3.00 ~ 14.00	31.00	70.00	M24 - 2.00	26.00	16.00
NT-1	3.00 ~ 12.00	8.20	30.10	1/4 - 28UNF	7.00	5.00

**** All dimension are given in millimeters.

U-200

Drilling & Tapping Multi Spindle Heads



Characteristics & Dimensions

MODEL	U-200
Nozzle	*C-5, C-6, C-9, C-12*
Minimum Distance Between Centers	*200.00*
Maximum Distance Between Centers	*C-5(13), C-6(18), C-9(27.5), C-12(30)*
Speed Radio	*1 : 1*
Maximum Drilling Capability	*C-5(Ø5), C-6(Ø6), C-9(Ø9), C-12(Ø12)*
Maximum Tapping Capability	*C-5(M4), C-6(M6), C-9(M9), C-12(M12)*
Spindle	*4 ~ 12*

***** All dimension are given in millimeters.*

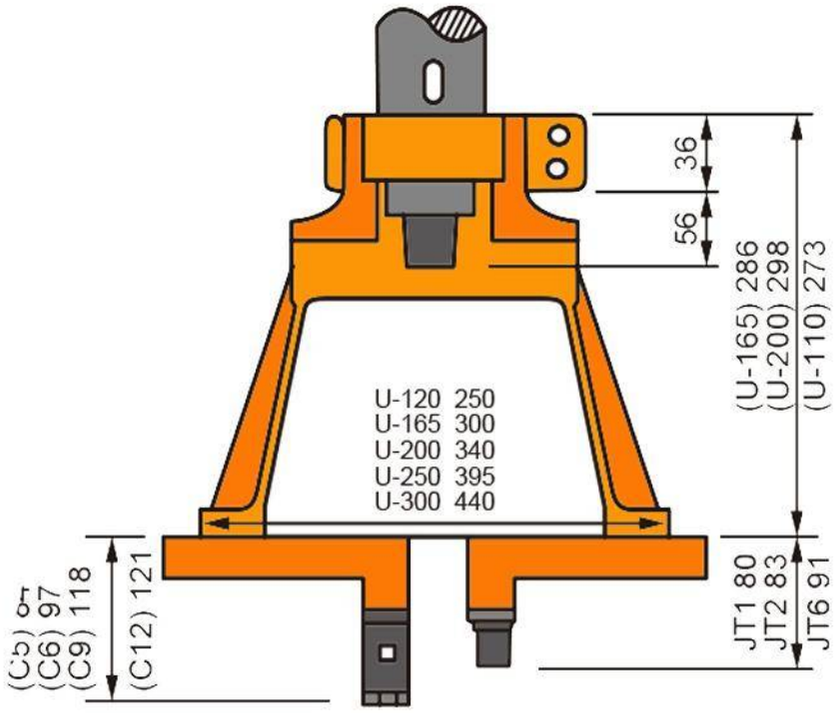

CT SERIES: TAPPING TYPE

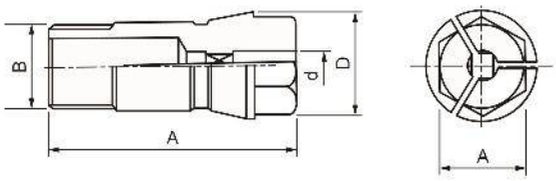

C SERIES: DRILLING TYPE

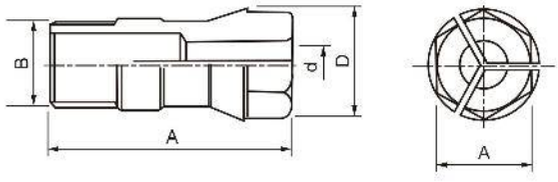

Characteristics & Dimensions

TAPPING NOZZLES

MODEL	Ød	ØD	ØL	B	A	Ø CAPACITY
CT-4	2.00 ~ 4.00	8.20	24.00	1/4 - 28UNF	6.00	M3.50 x 0.60
CT-5	2.00 ~ 5.00	10.80	31.50	5/16 - 24UNF	8.00	M4 x 0.70
CT-6	2.00 ~ 6.00	13.10	36.00	3/8 - 24UNF	10.00	M6 x 1.00
CT-9	2.00 ~ 7.00	17.00	46.00	1/2 - 20UNF	14.00	M8 x 1.25
CT-12	3.00 ~ 9.00	21.00	50.00	5/8 - 18UNF	17.00	M12 x 1.75
CT-14	3.00 ~ 12.00	24.50	54.00	3/4 - 16UNF	21.00	M14 x 2.00
CT-16	3.00 ~ 14.00	31.00	70.00	M24 - 2.00	26.00	M18 x 2.50
NT-1	2.00 ~ 5.00	8.20	30.10	1/4 - 28UNF	7.00	M4 x 0.70

DRILLING NOZZLES

MODEL	Ød	ØD	ØL	B	A	Ø CAPACITY
C-4	2.00 ~ 4.00	8.20	24.00	1/4 - 28UNF	6.00	4.00
C-5	2.00 ~ 5.00	10.80	31.50	5/16 - 24UNF	8.00	5.00
C-6	2.00 ~ 6.00	13.10	36.00	3/8 - 24UNF	10.00	6.00
C-9	2.00 ~ 7.00	17.00	46.00	1/2 - 20UNF	14.00	9
C-12	3.00 ~ 9.00	21.00	50.00	5/8 - 18UNF	17.00	12.00
C-14	3.00 ~ 12.00	24.50	54.00	3/4 - 16UNF	21.00	14.00
C-16	3.00 ~ 14.00	31.00	70.00	M24 - 2.00	26.00	16.00
NT-1	3.00 ~ 12.00	8.20	30.10	1/4 - 28UNF	7.00	5.00

**** All dimension are given in millimeters.

U-250

Drilling & Tapping Multi Spindle Heads



Characteristics & Dimensions

MODEL	U-250
Nozzle	*C-5, C-6, C-9, C-12*
Minimum Distance Between Centers	*250.00*
Maximum Distance Between Centers	*C-5(13), C-6(18), C-9(27.5), C-12(30)*
Speed Radio	*1 : 1*
Maximum Drilling Capability	*C-5(Ø5), C-6(Ø6), C-9(Ø9), C-12(Ø12)*
Maximum Tapping Capability	*C-5(M4), C-6(M6), C-9(M9), C-12(M12)*
Spindle	*4 ~ 12*

***** All dimension are given in millimeters.*

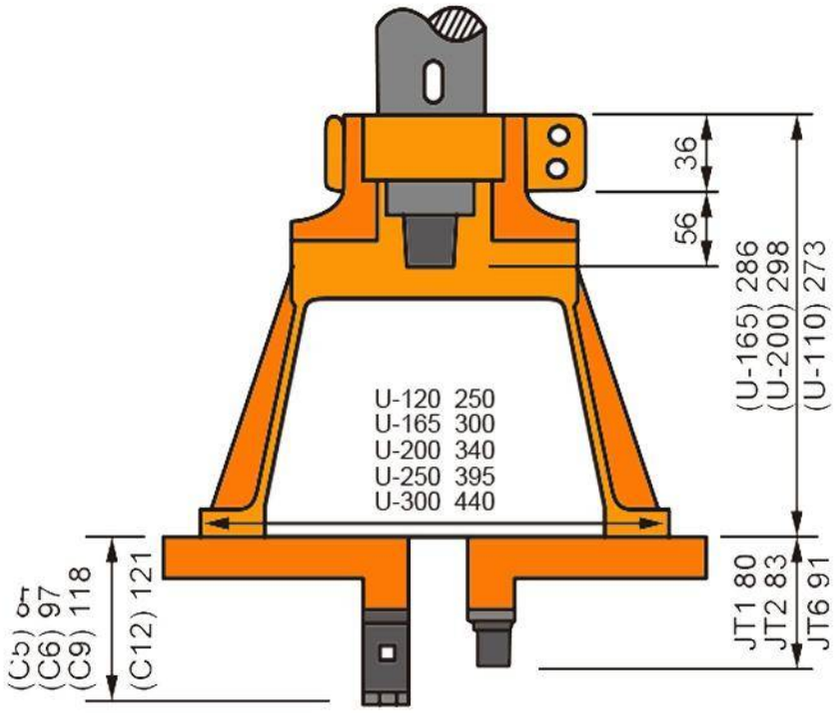

CT SERIES: TAPPING TYPE

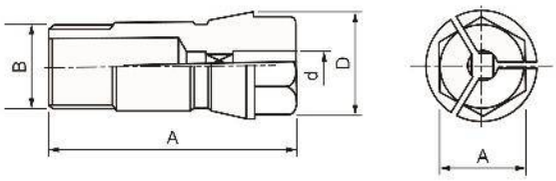

C SERIES: DRILLING TYPE

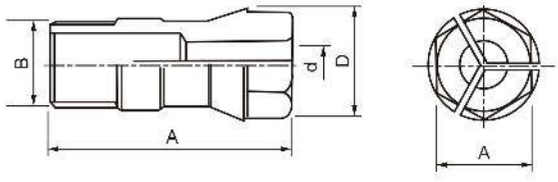

Characteristics & Dimensions

TAPPING NOZZLES

MODEL	Ød	ØD	ØL	B	A	Ø CAPACITY
CT-4	2.00 ~ 4.00	8.20	24.00	1/4 - 28UNF	6.00	M3.50 x 0.60
CT-5	2.00 ~ 5.00	10.80	31.50	5/16 - 24UNF	8.00	M4 x 0.70
CT-6	2.00 ~ 6.00	13.10	36.00	3/8 - 24UNF	10.00	M6 x 1.00
CT-9	2.00 ~ 7.00	17.00	46.00	1/2 - 20UNF	14.00	M8 x 1.25
CT-12	3.00 ~ 9.00	21.00	50.00	5/8 - 18UNF	17.00	M12 x 1.75
CT-14	3.00 ~ 12.00	24.50	54.00	3/4 - 16UNF	21.00	M14 x 2.00
CT-16	3.00 ~ 14.00	31.00	70.00	M24 - 2.00	26.00	M18 x 2.50
NT-1	2.00 ~ 5.00	8.20	30.10	1/4 - 28UNF	7.00	M4 x 0.70

DRILLING NOZZLES

MODEL	Ød	ØD	ØL	B	A	Ø CAPACITY
C-4	2.00 ~ 4.00	8.20	24.00	1/4 - 28UNF	6.00	4.00
C-5	2.00 ~ 5.00	10.80	31.50	5/16 - 24UNF	8.00	5.00
C-6	2.00 ~ 6.00	13.10	36.00	3/8 - 24UNF	10.00	6.00
C-9	2.00 ~ 7.00	17.00	46.00	1/2 - 20UNF	14.00	9
C-12	3.00 ~ 9.00	21.00	50.00	5/8 - 18UNF	17.00	12.00
C-14	3.00 ~ 12.00	24.50	54.00	3/4 - 16UNF	21.00	14.00
C-16	3.00 ~ 14.00	31.00	70.00	M24 - 2.00	26.00	16.00
NT-1	3.00 ~ 12.00	8.20	30.10	1/4 - 28UNF	7.00	5.00

**** All dimension are given in millimeters.

U-300

Drilling & Tapping Multi Spindle Heads



Characteristics & Dimensions

MODEL	U-300
Nozzle	*C-5, C-6, C-9, C-12*
Minimum Distance Between Centers	*300.00*
Maximum Distance Between Centers	*C-5(13), C-6(18), C-9(27.5), C-12(30)*
Speed Radio	*1 : 1*
Maximum Drilling Capability	*C-5(Ø5), C-6(Ø6), C-9(Ø9), C-12(Ø12)*
Maximum Tapping Capability	*C-5(M4), C-6(M6), C-9(M9), C-12(M12)*
Spindle	*4 ~ 12*

***** All dimension are given in millimeters.*

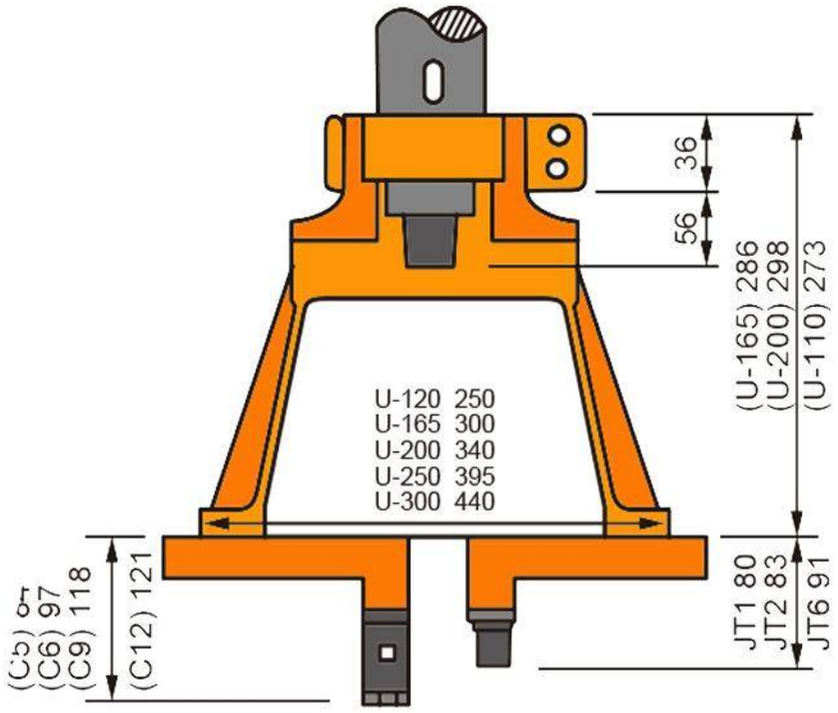

CT SERIES: TAPPING TYPE

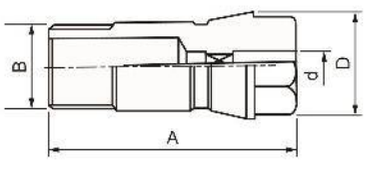

C SERIES: DRILLING TYPE

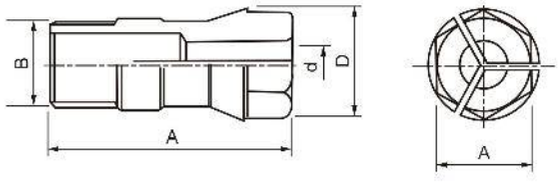

Characteristics & Dimensions

TAPPING NOZZLES

MODEL	Ød	ØD	ØL	B	A	Ø CAPACITY
CT-4	2.00 ~ 4.00	8.20	24.00	1/4 - 28UNF	6.00	M3.50 x 0.60
CT-5	2.00 ~ 5.00	10.80	31.50	5/16 - 24UNF	8.00	M4 x 0.70
CT-6	2.00 ~ 6.00	13.10	36.00	3/8 - 24UNF	10.00	M6 x 1.00
CT-9	2.00 ~ 7.00	17.00	46.00	1/2 - 20UNF	14.00	M8 x 1.25
CT-12	3.00 ~ 9.00	21.00	50.00	5/8 - 18UNF	17.00	M12 x 1.75
CT-14	3.00 ~ 12.00	24.50	54.00	3/4 - 16UNF	21.00	M14 x 2.00
CT-16	3.00 ~ 14.00	31.00	70.00	M24 - 2.00	26.00	M18 x 2.50
NT-1	2.00 ~ 5.00	8.20	30.10	1/4 - 28UNF	7.00	M4 x 0.70

DRILLING NOZZLES

MODEL	Ød	ØD	ØL	B	A	Ø CAPACITY
C-4	2.00 ~ 4.00	8.20	24.00	1/4 - 28UNF	6.00	4.00
C-5	2.00 ~ 5.00	10.80	31.50	5/16 - 24UNF	8.00	5.00
C-6	2.00 ~ 6.00	13.10	36.00	3/8 - 24UNF	10.00	6.00
C-9	2.00 ~ 7.00	17.00	46.00	1/2 - 20UNF	14.00	9
C-12	3.00 ~ 9.00	21.00	50.00	5/8 - 18UNF	17.00	12.00
C-14	3.00 ~ 12.00	24.50	54.00	3/4 - 16UNF	21.00	14.00
C-16	3.00 ~ 14.00	31.00	70.00	M24 - 2.00	26.00	16.00
NT-1	3.00 ~ 12.00	8.20	30.10	1/4 - 28UNF	7.00	5.00

**** All dimension are given in millimeters.

CBB SERIES

CROSSED SERVO SLIDE TABLE WITH TEMPERED GUIDES AND BALL SCREW

CBB-150

Servo Crossed Sliding Tables With Hardened Guides And Ball Screw

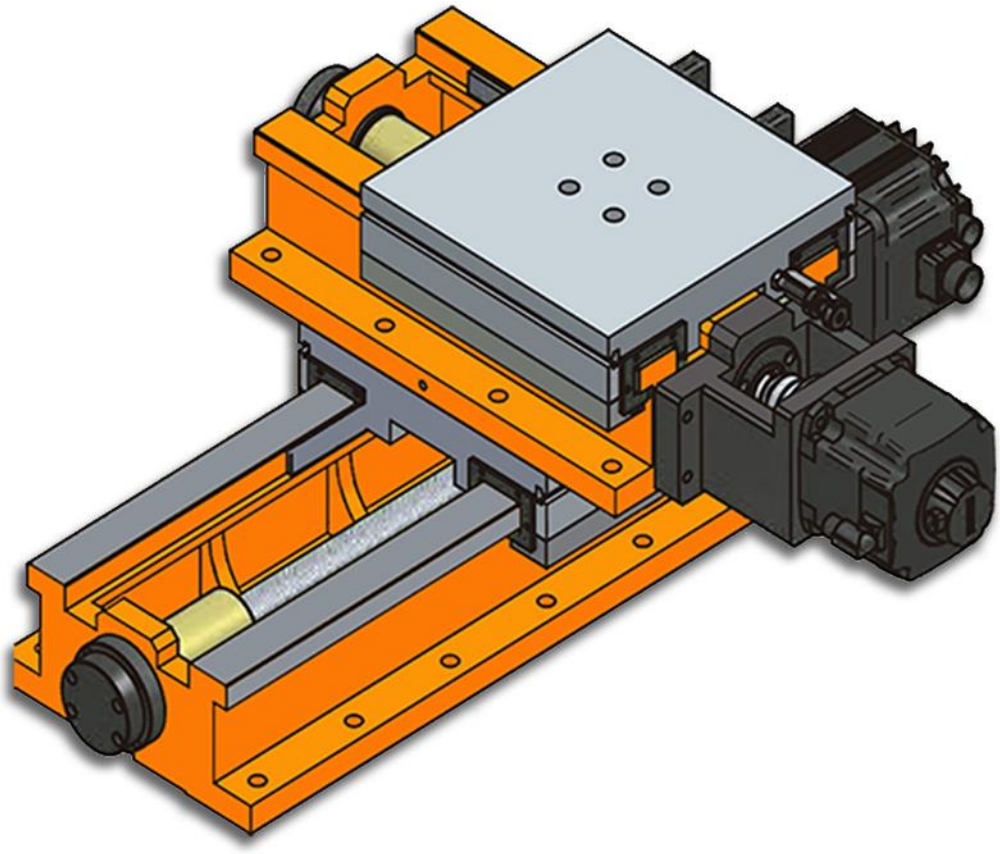

Characteristics & Dimensions

MODEL	CBB150
Profile Width	*150.00*
Cross Slide Stroke On "X" Axis	*80.00 ~ 180.00*
Cross Slide Stroke On "Y" Axis	*80.00 ~ 180.00*
Parallelism	*Within 0.01 mm / 100.00 mm*

** Servo Motor Stand / Coupling Bases / Steel Telescopic Covers Included.*
*** **Turcite®** is included on slide ways to reduce friction.*
**** All dimension are given in millimeters.*
***** Ball Screw Class **C5** or **C3** is available upon request..*

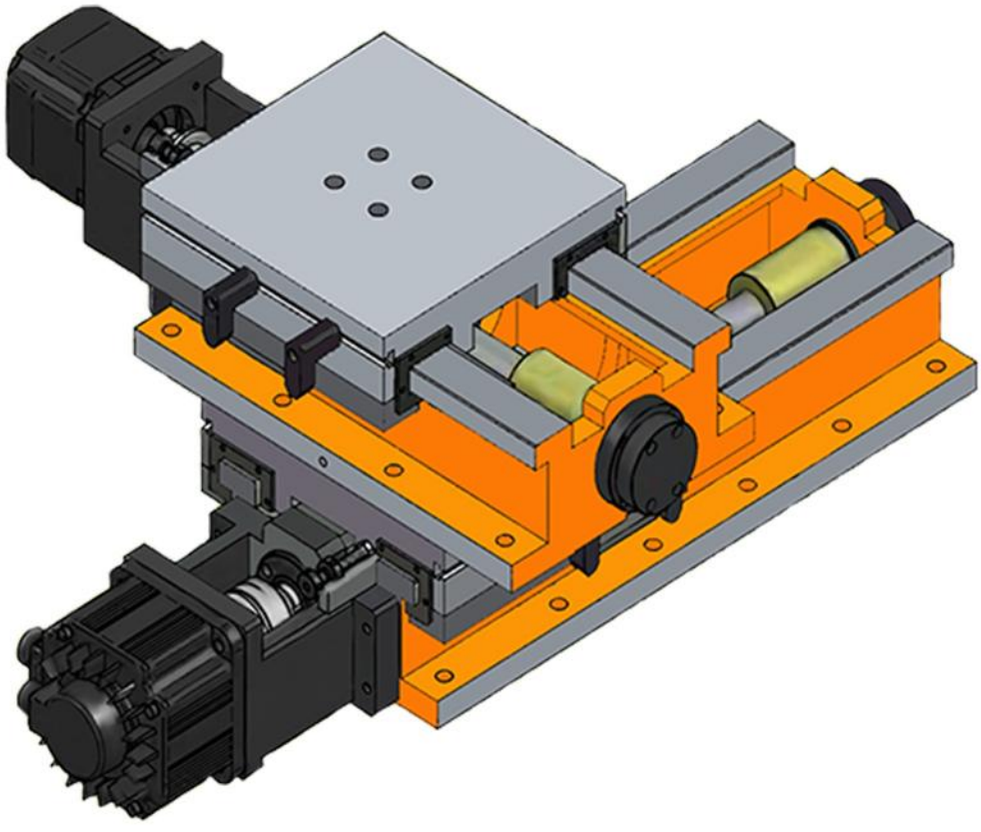

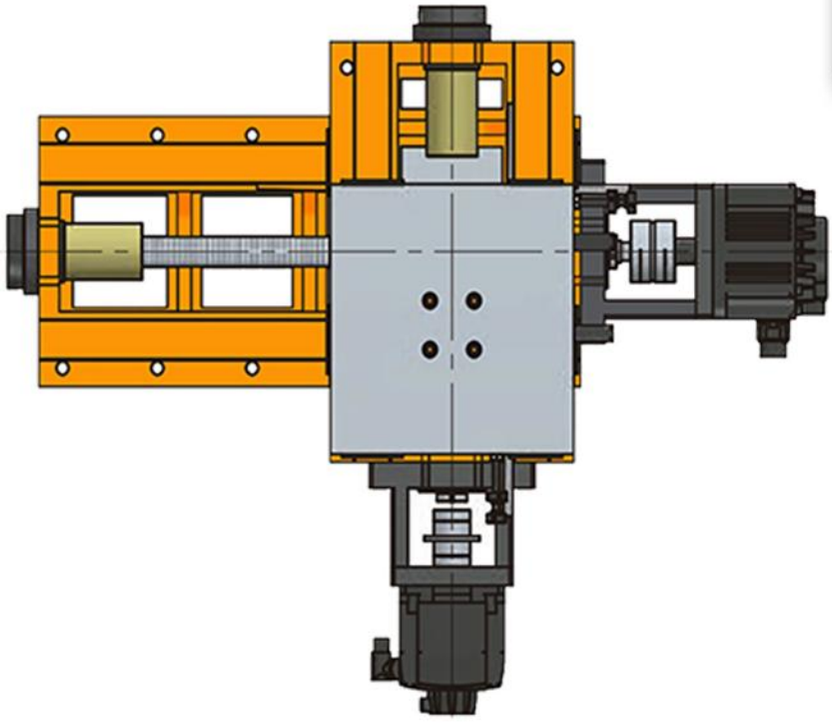

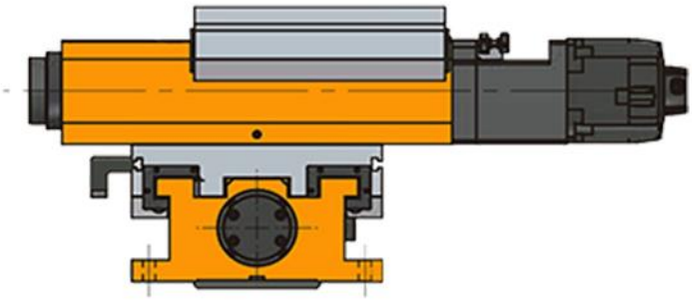

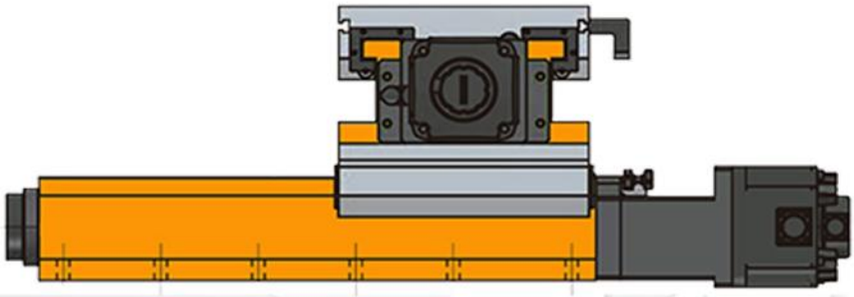

CBB-180

Servo Crossed Sliding Tables With Hardened Guides And Ball Screw

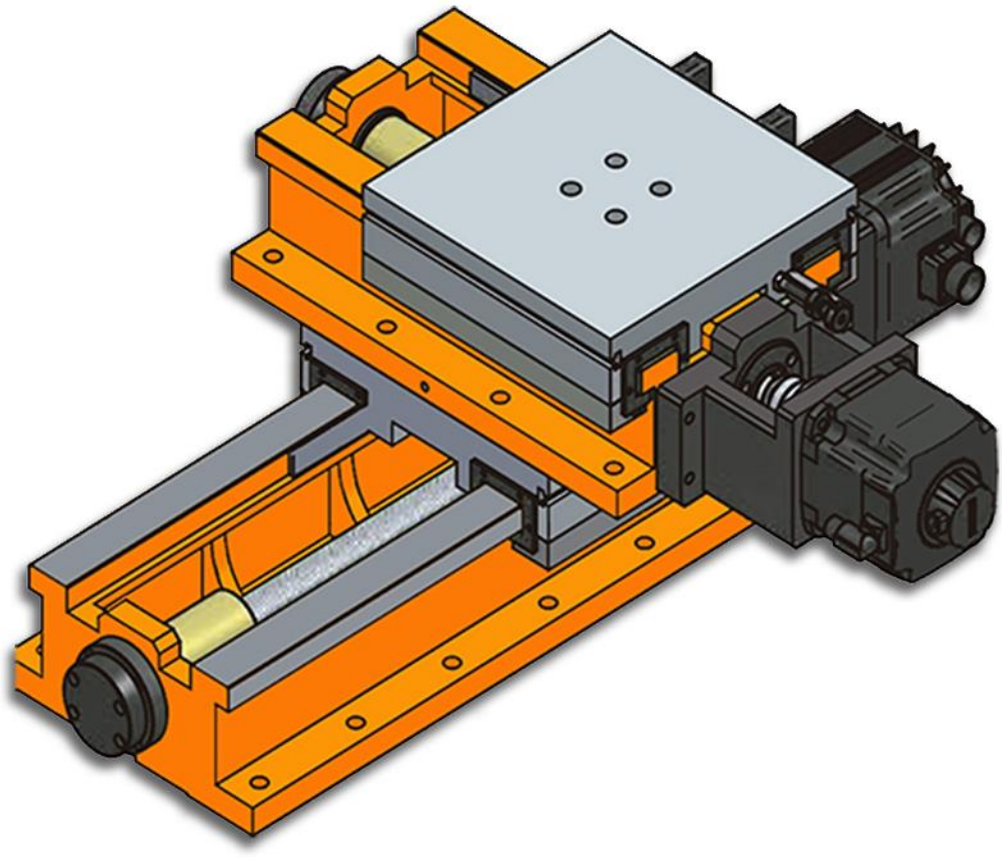

Characteristics & Dimensions

MODEL	CBB-180
Profile Width	*180.00*
Cross Slide Stroke On "X" Axis	*100.00 ~ 200.00*
Cross Slide Stroke On "Y" Axis	*100.00 ~ 200.00*
Parallelism	*Within 0.01 mm / 100.00 mm*

** Servo Motor Stand / Coupling Bases / Steel Telescopic Covers Included.*
*** **Turcite®** is included on slide ways to reduce friction.*
**** All dimension are given in millimeters.*
***** Ball Screw Class **C5** or **C3** is available upon request..*

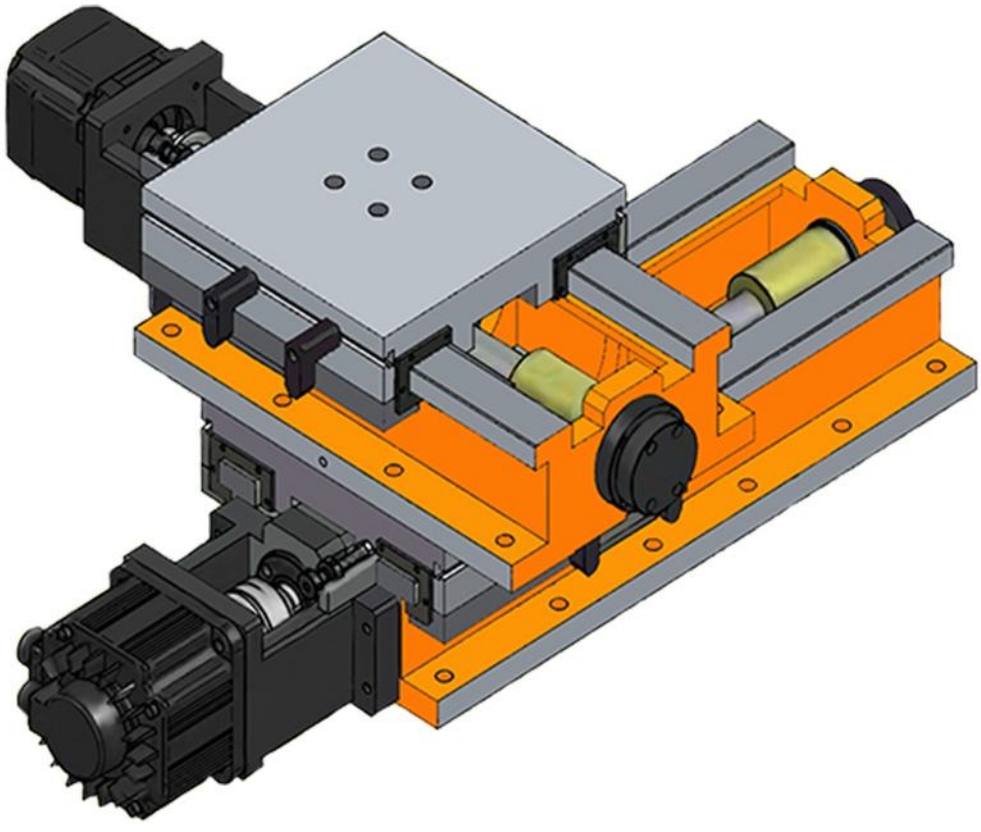

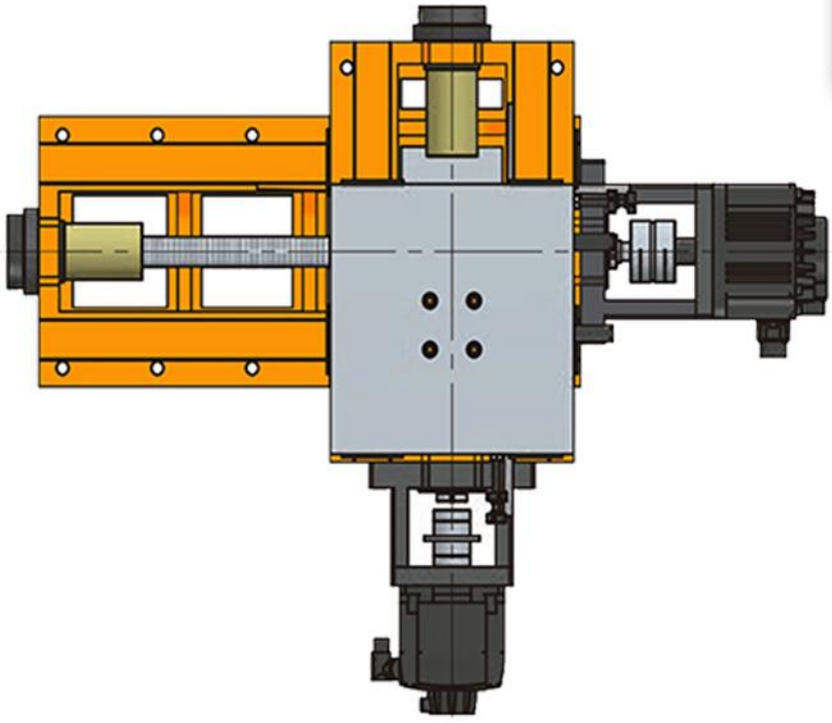

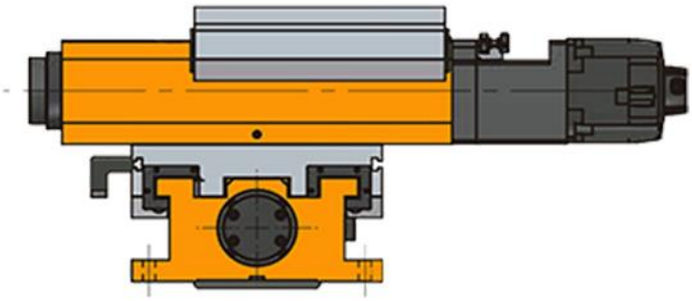

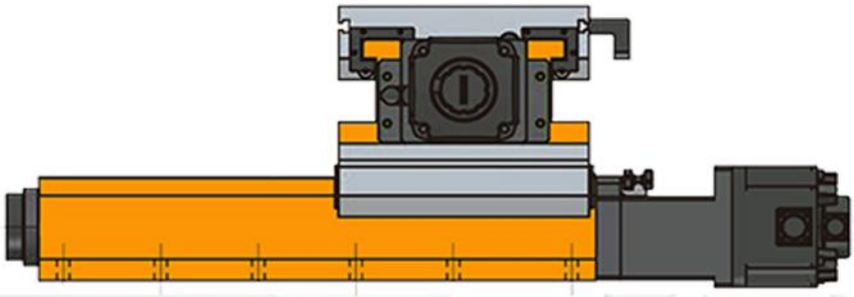

CBB-220

Servo Crossed Sliding Tables With Hardened Guides And Ball Screw

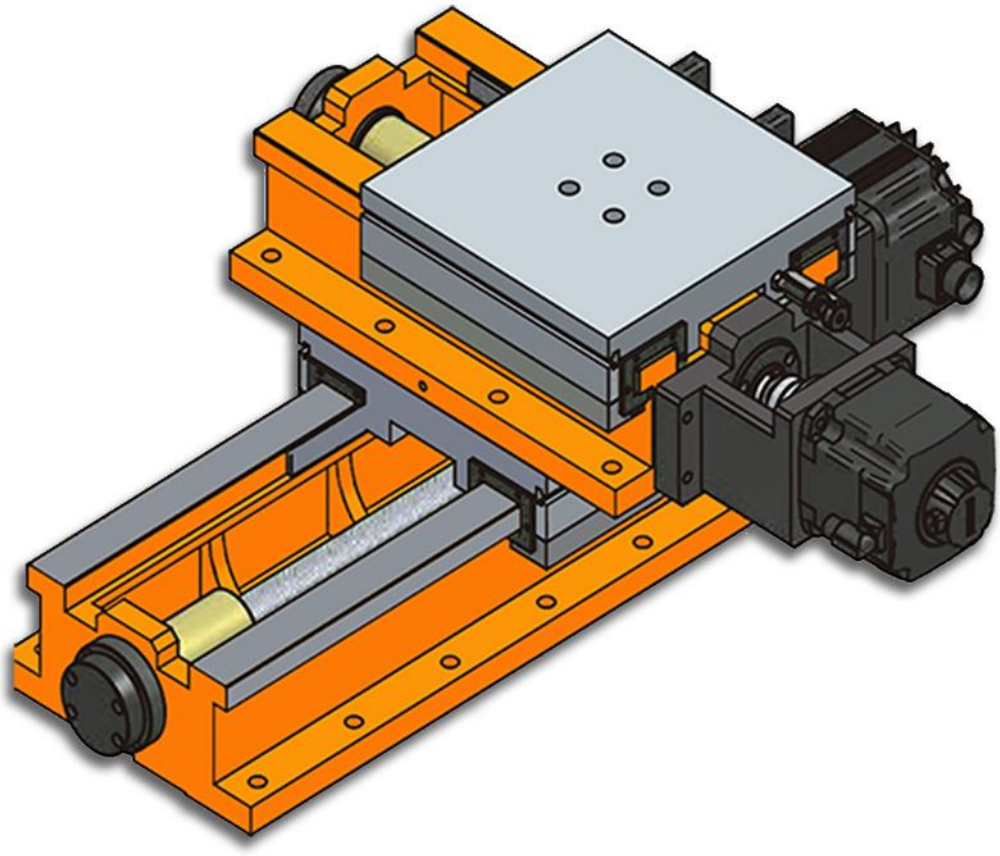

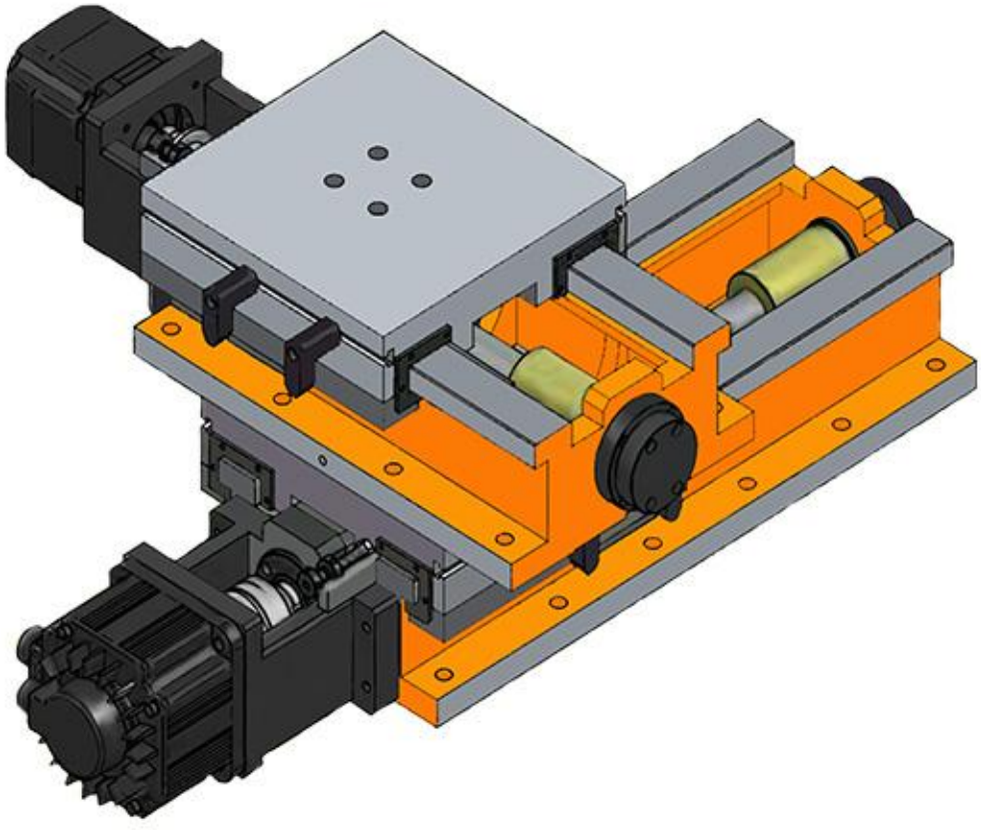

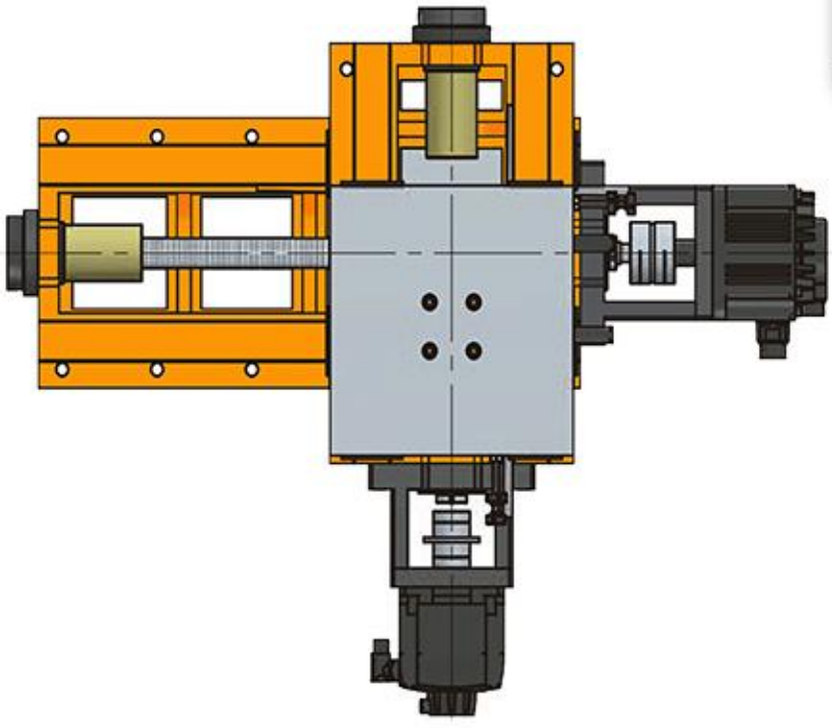

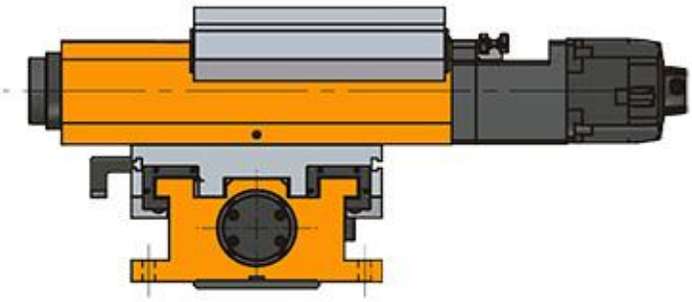

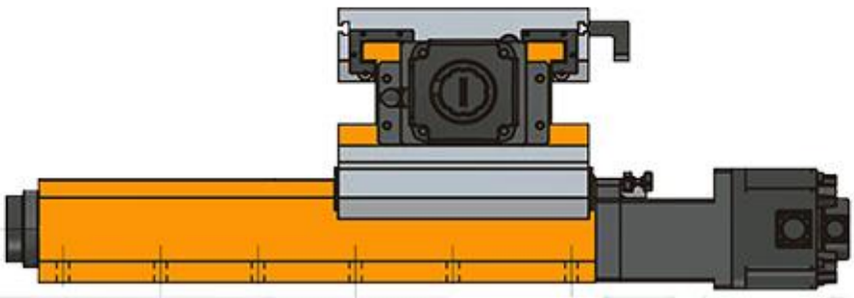

Characteristics & Dimensions

Model	CBB-220
Profile Width	*220.00*
Cross Slide Stroke On "X" Axis	*100.00 ~ 500.00*
Cross Slide Stroke On "Y" Axis	*100.00 ~ 500.00*
Parallelism	*Within 0.01 mm / 100.00 mm*

** Servo Motor Stand / Coupling Bases / Steel Telescopic Covers Included.*
*** **Turcite®** is included on slide ways to reduce friction.*
**** All dimension are given in millimeters.*
***** Ball Screw Class **C5** or **C3** is available upon request..*

CBB-250

Servo Crossed Sliding Tables With Hardened Guides And Ball Screw

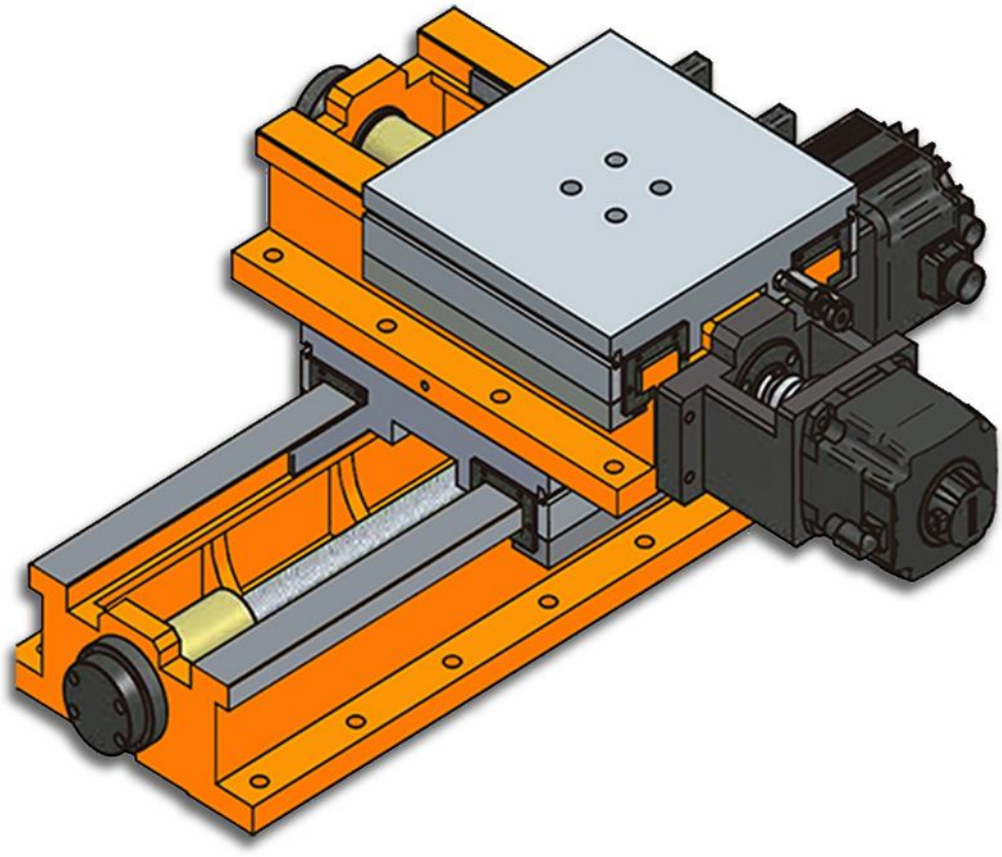

Characteristics & Dimensions

Model	CBB-250
Profile Width	*250.00*
Cross Slide Stroke On "X" Axis	*100.00 ~ 760.00*
Cross Slide Stroke On "Y" Axis	*100.00 ~ 760.00*
Parallelism	*Within 0.01 mm / 100.00 mm*

** Servo Motor Stand / Coupling Bases / Steel Telescopic Covers Included.*
*** **Turcite®** is included on slide ways to reduce friction.*
**** All dimension are given in millimeters.*
***** Ball Screw Class **C5** or **C3** is available upon request..*

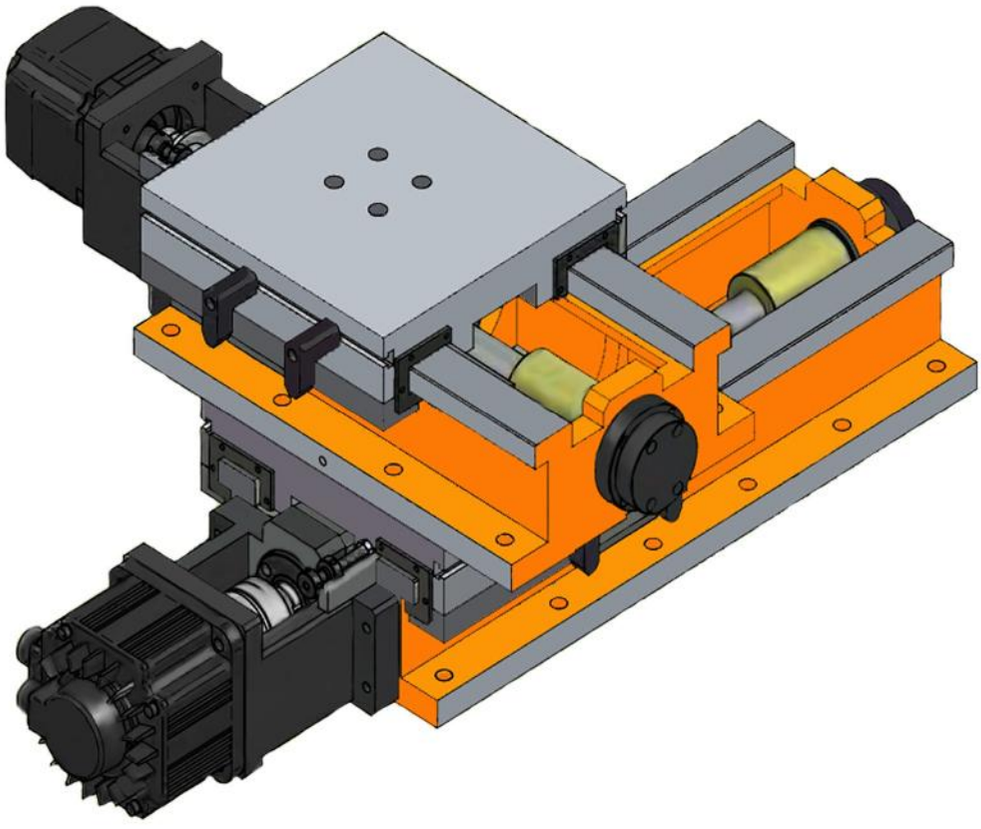

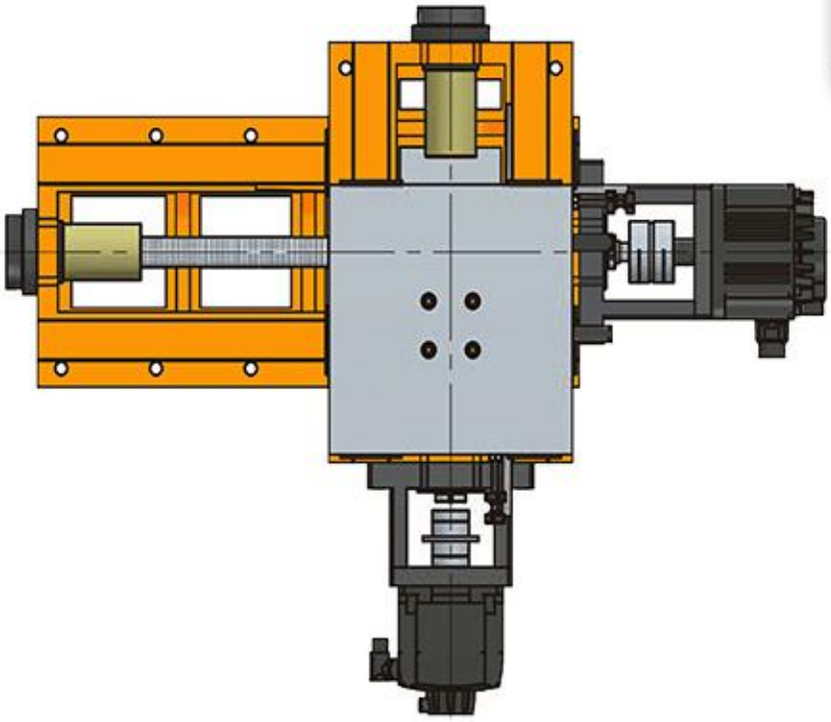

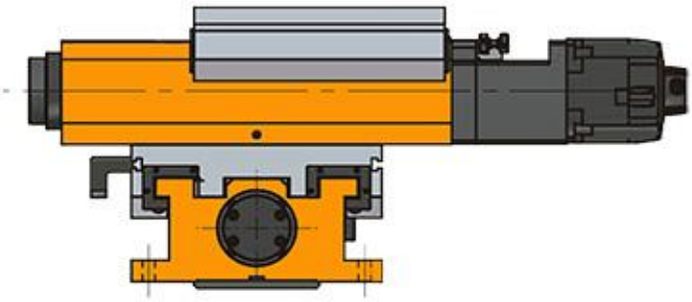

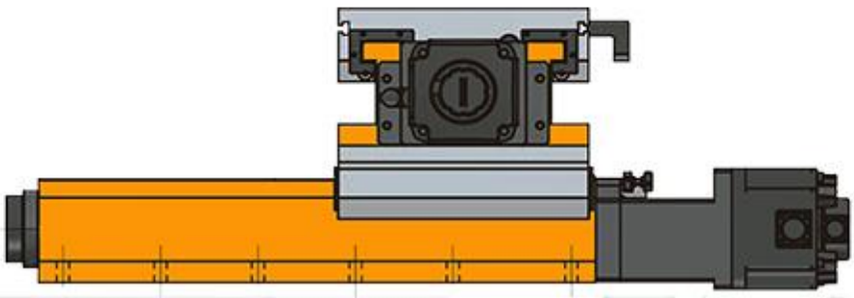

CBB-300

Servo Crossed Sliding Tables With Hardened Guides And Ball Screw

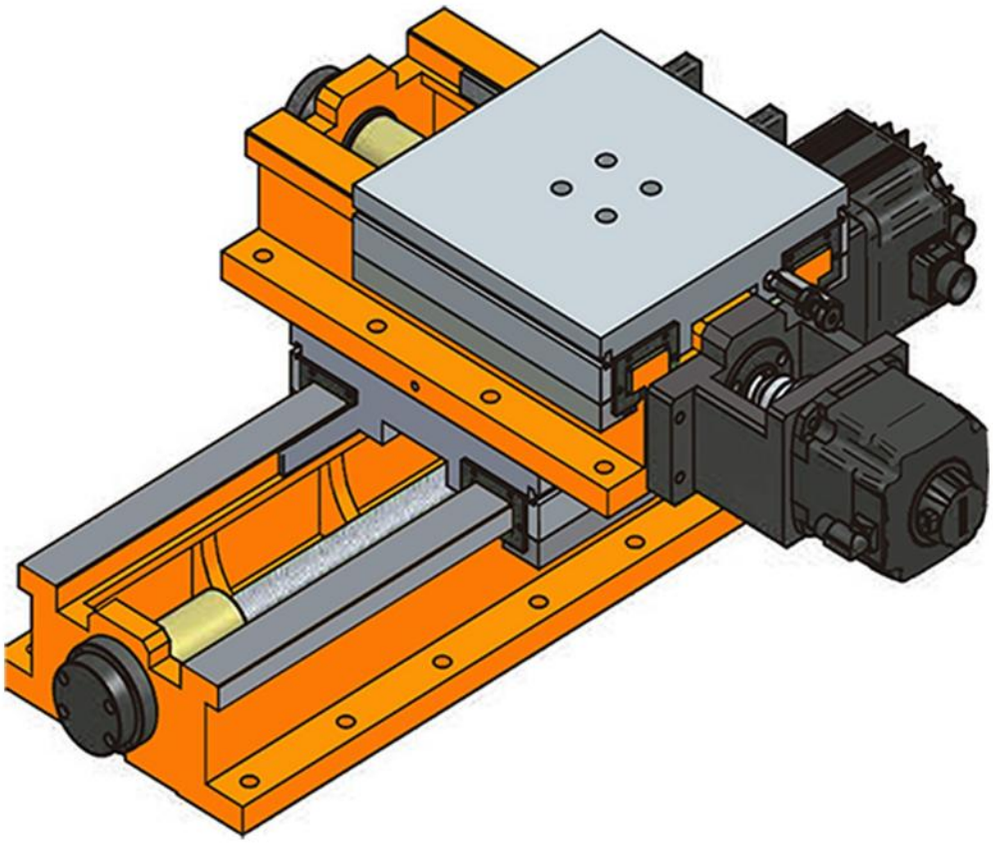

Characteristics & Dimensions

Model	CBB-300
Profile Width	*300.00*
Cross Slide Stroke On "X" Axis	*100.00 ~ 760.00*
Cross Slide Stroke On "Y" Axis	*100.00 ~ 760.00*
Parallelism	*Within 0.01 mm / 100.00 mm*

** Servo Motor Stand / Coupling Bases / Steel Telescopic Covers Included.*
*** **Turcite®** is included on slide ways to reduce friction.*
**** All dimension are given in millimeters.*
***** Ball Screw Class **C5** or **C3** is available upon request..*

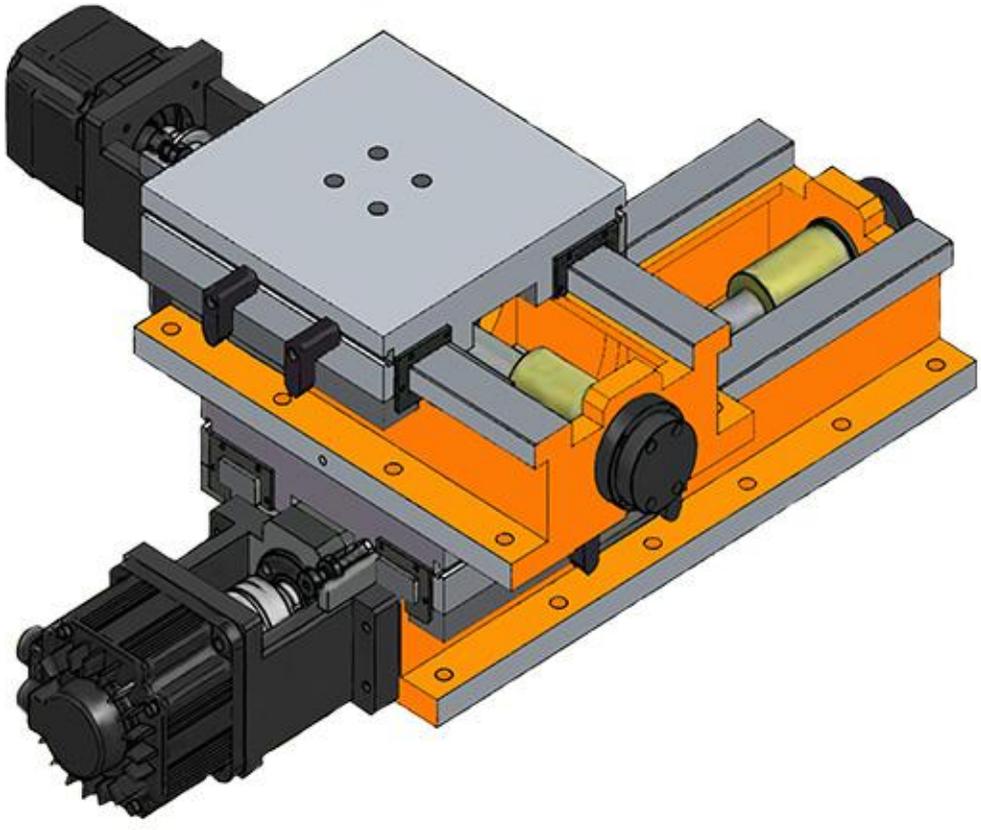

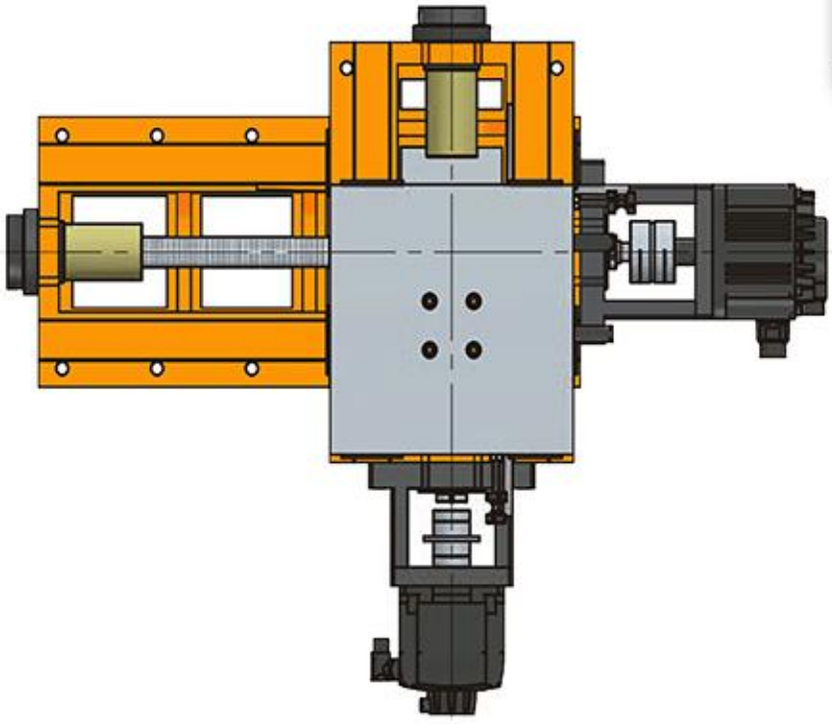

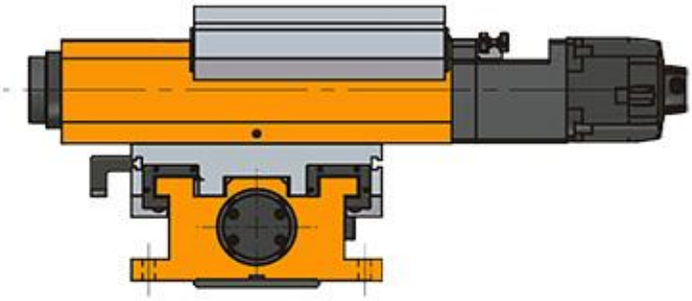

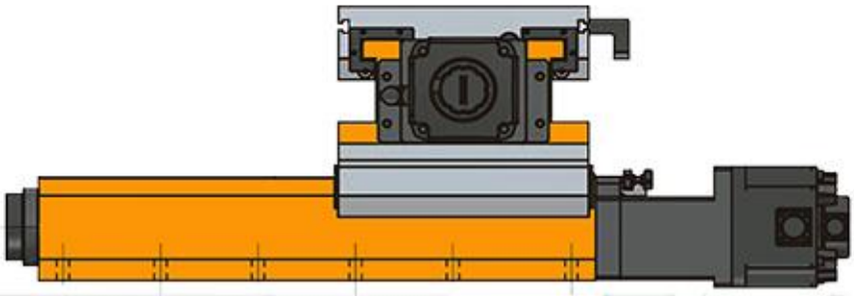

CBB-360

Servo Crossed Sliding Tables With Hardened Guides And Ball Screw

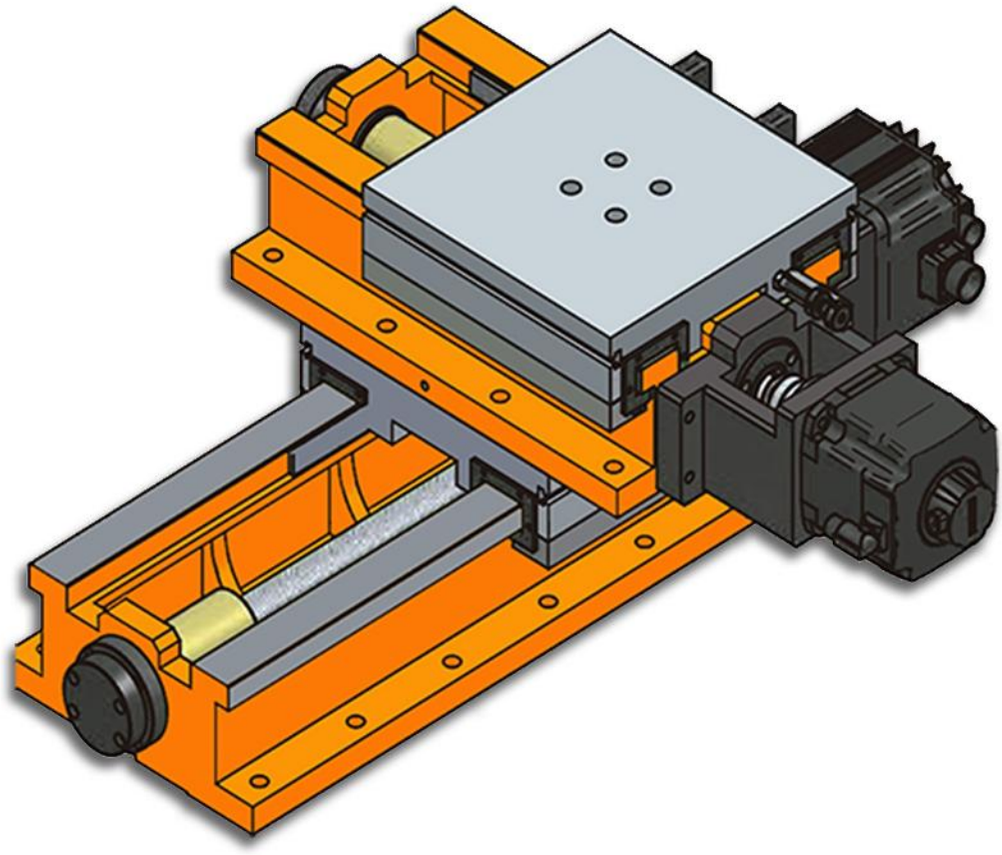

Characteristics & Dimensions

Model	CBB-360
Profile Width	*360.00*
Cross Slide Stroke On "X" Axis	*180.00 ~ 580.00*
Cross Slide Stroke On "Y" Axis	*180.00 ~ 580.00*
Parallelism	*Within 0.01 mm / 100.00 mm*

** Servo Motor Stand / Coupling Bases / Steel Telescopic Covers Included.*
*** **Turcite®** is included on slide ways to reduce friction.*
**** All dimension are given in millimeters.*
***** Ball Screw Class **C5** or **C3** is available upon request..*

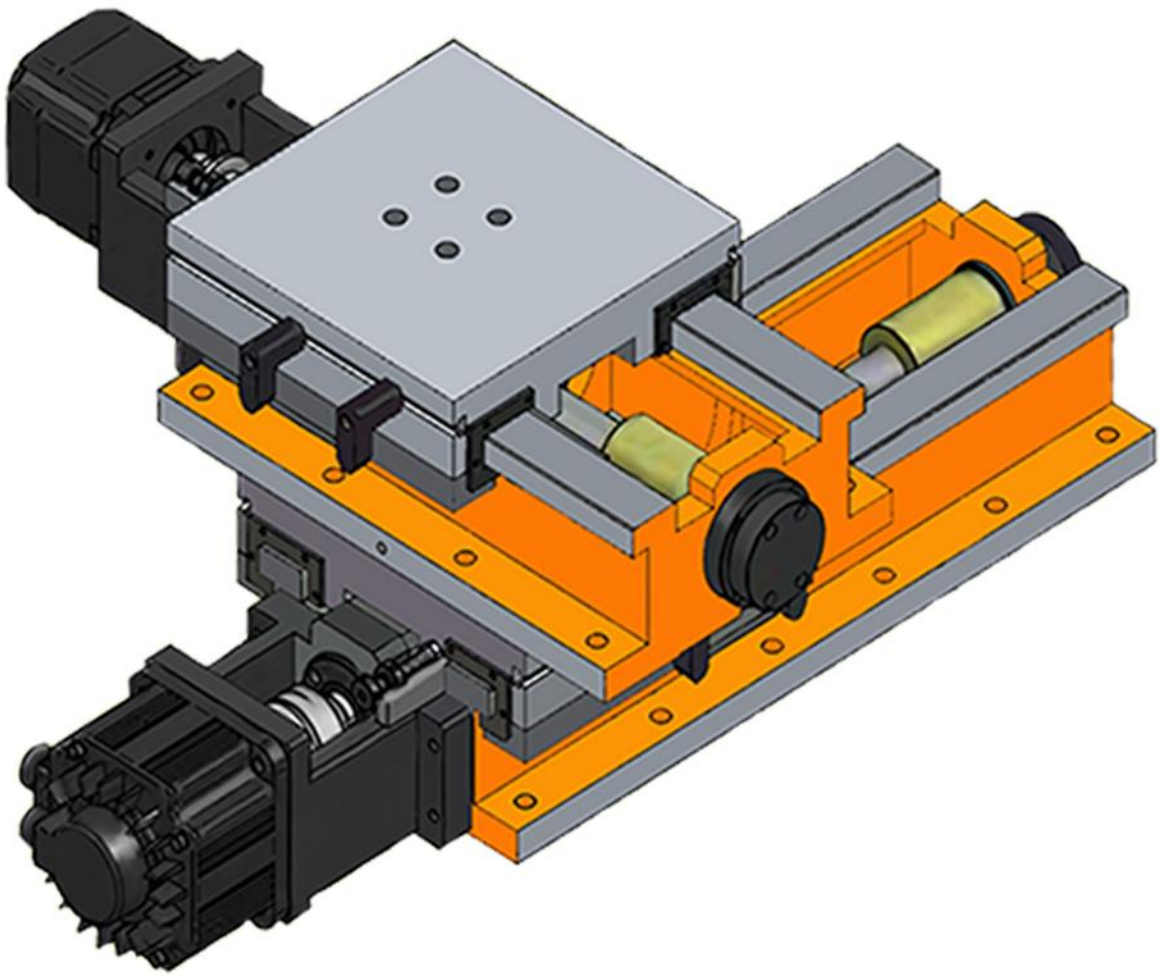

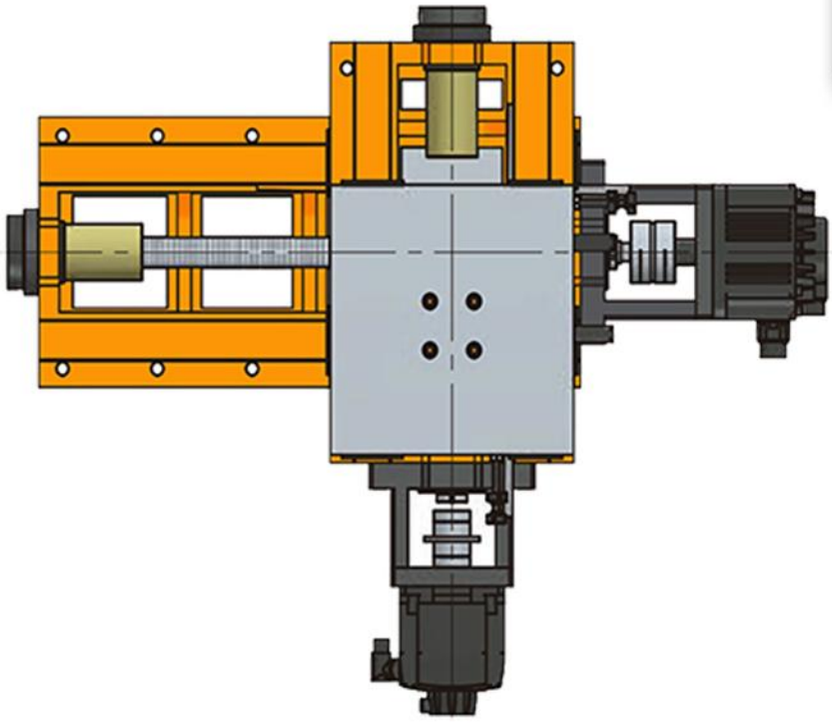

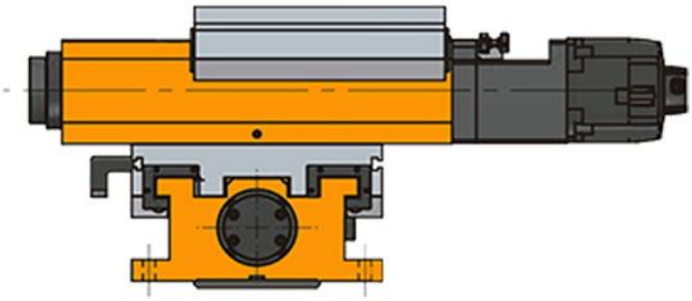

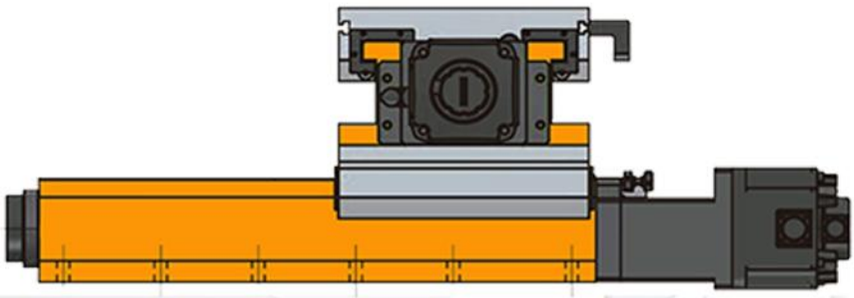

CHH SERIES

HYDRAULIC CROSSED SLIDE TABLE

CHH220-300/420

Hydraulic Movement Crossed Sliding Table

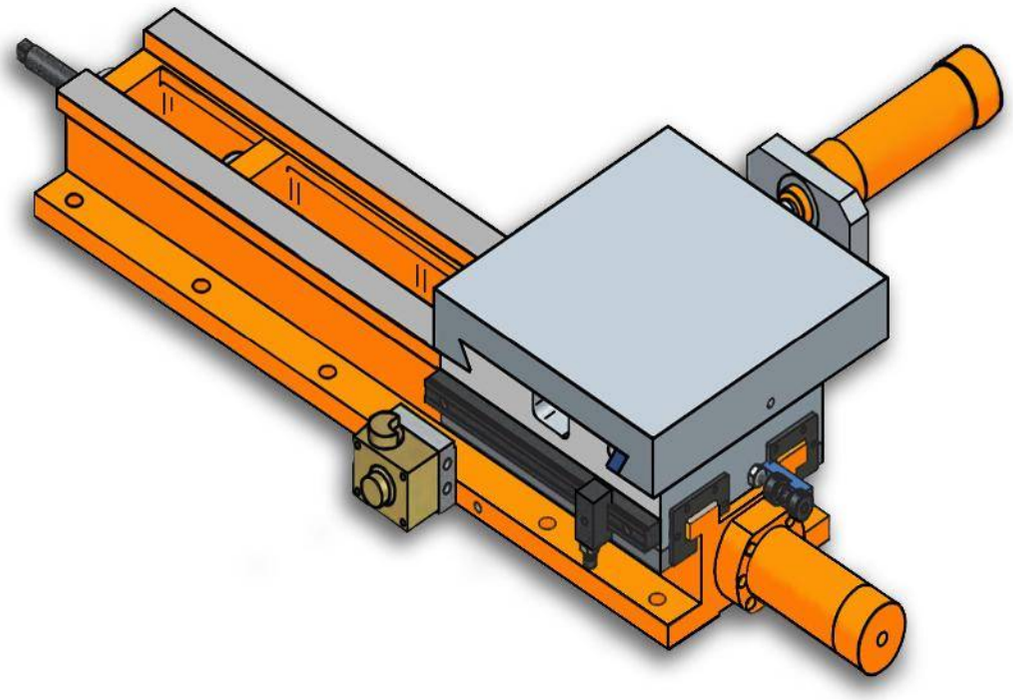

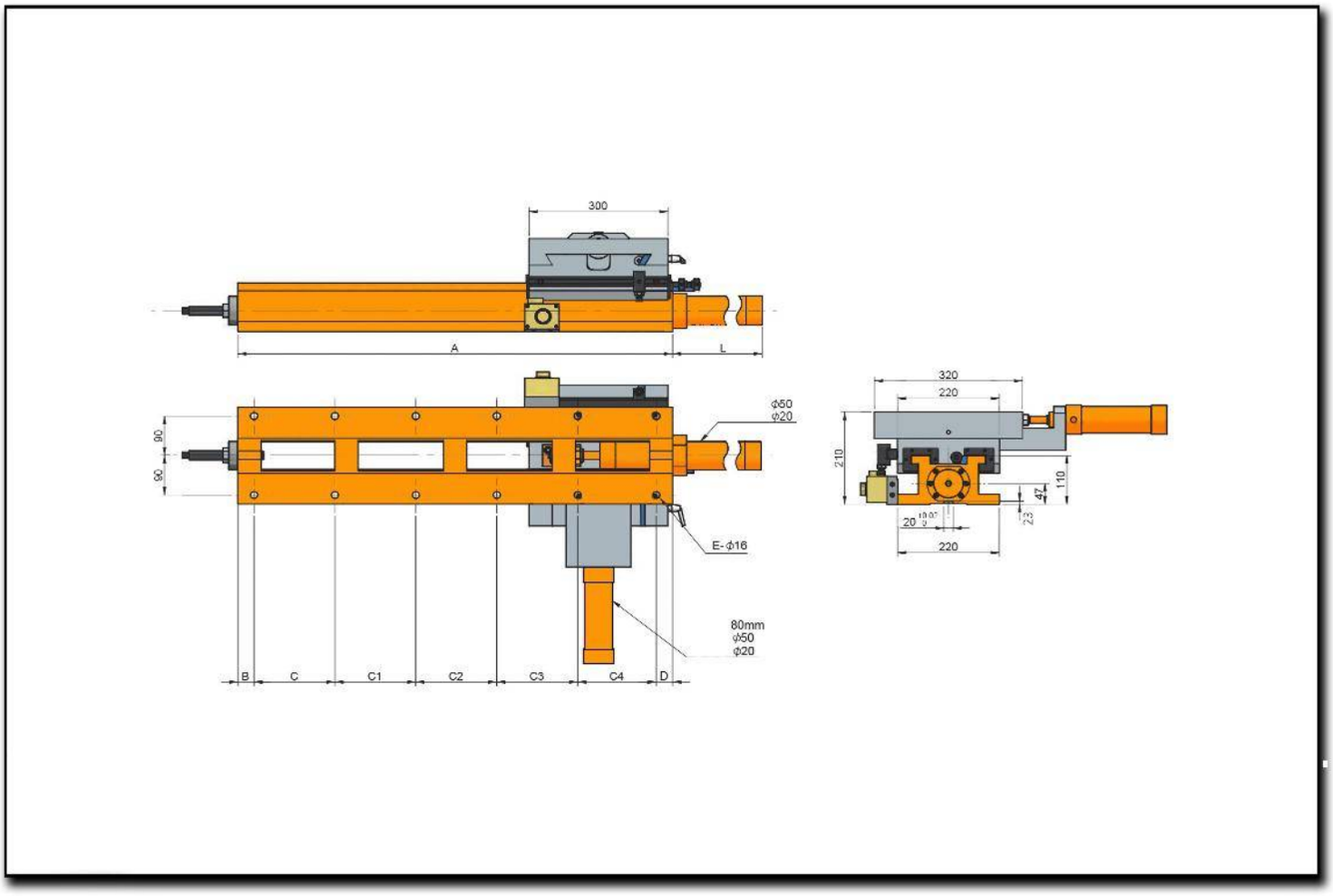
300
A
L
90
80
ϕ50
ϕ20
E- ϕ16
80mm
ϕ50
ϕ20
B
C
C1
C2
C3
C4
D
320
220
210
110
47
23
20
220

Characteristics & Dimensions

MODEL	CHH220-300/420
A	*420.00*
B	*35.00*
C	*150.00*
C1	*200.00*
C2	-
C3	-
C4	-
D	*35.00*
E	*6.00*
F	*65.00*
"X" Maximum Stroke	*100.00*
"Y" Maximum Stroke	*100.00*
Sliding Table Dimensions	*300.00 x 320.00*
Total Device Weight	*110.00*

***** All dimensions are given in millimeters.*

CHH220-300/520

Hydraulic Movement Crossed Sliding Table

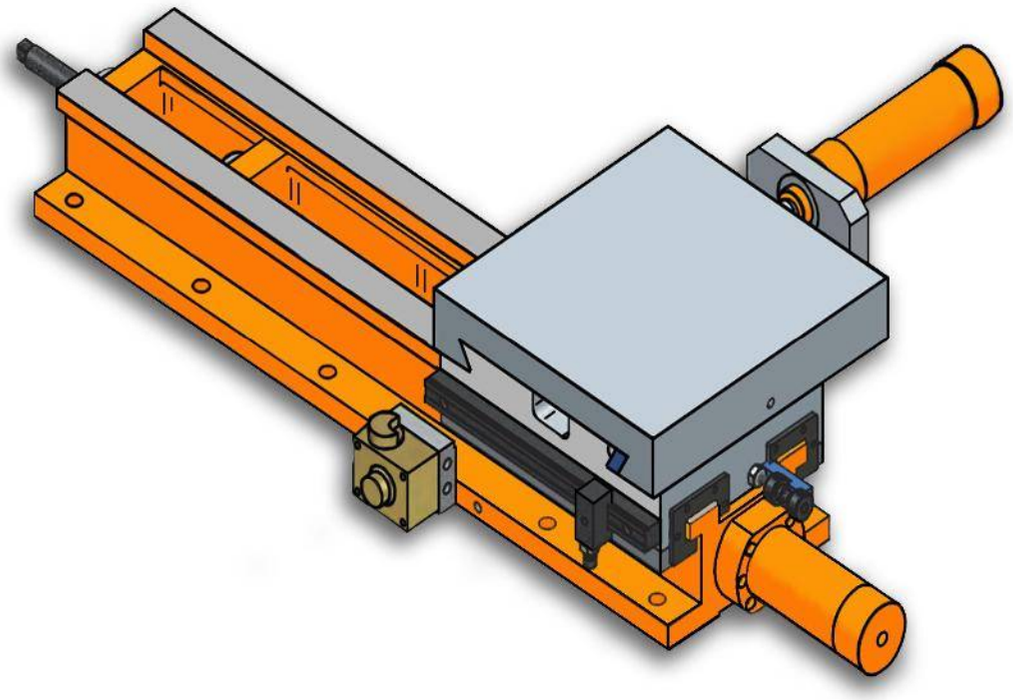

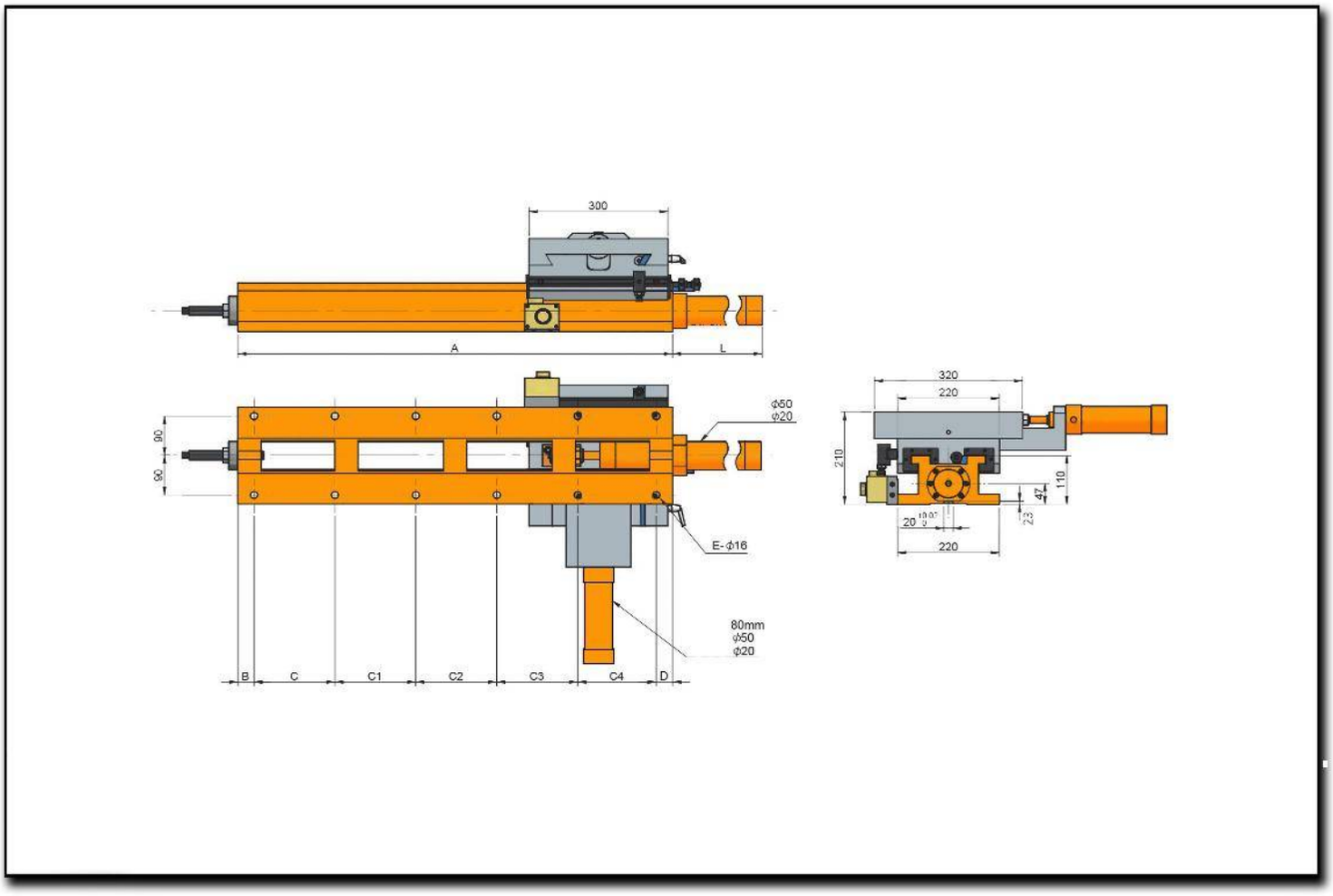
300
A
L
90
80
ϕ50
ϕ20
E- ϕ16
80mm
ϕ50
ϕ20
B
C
C1
C2
C3
C4
D
320
220
210
110
47
23
20
220

Characteristics & Dimensions

MODEL	CHH220-300/520
A	*520.00*
B	*35.00*
C	*150.00*
C1	*150.00*
C2	*150.00*
C3	-
C4	-
D	*35.00*
E	*8.00*
F	*182.00*
"X" Maximum Stroke	*200.00*
"Y" Maximum Stroke	*100.00*
Sliding Table Dimensions	*300.00 x 320.00*
Total Device Weight	*128.00*

***** All dimensions are given in millimeters.*

CHH220-300/670

Hydraulic Movement Crossed Sliding Table

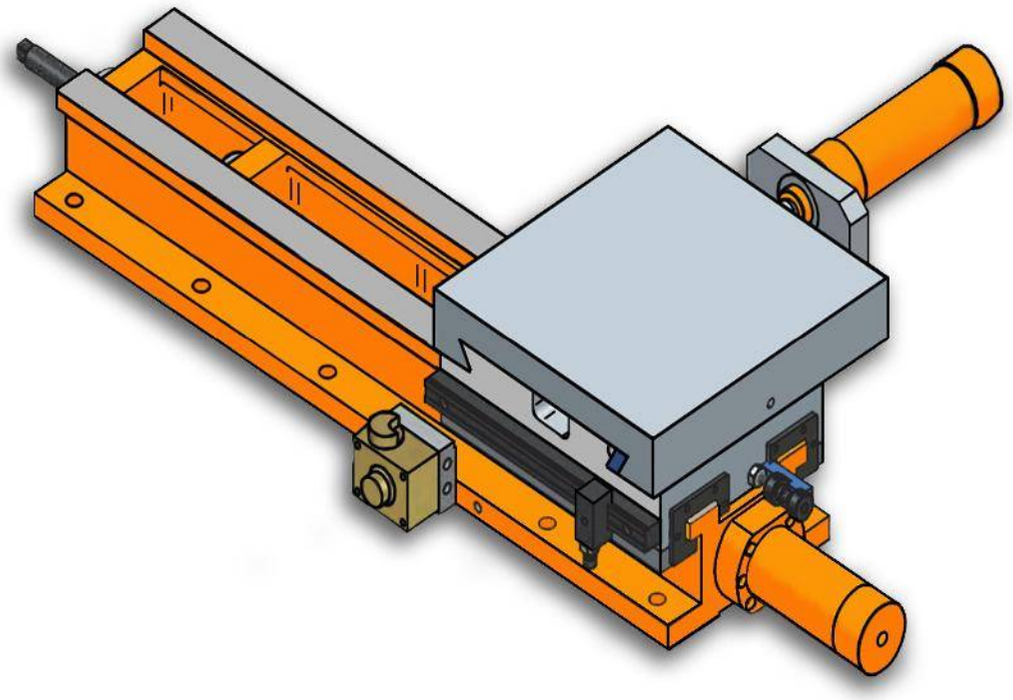

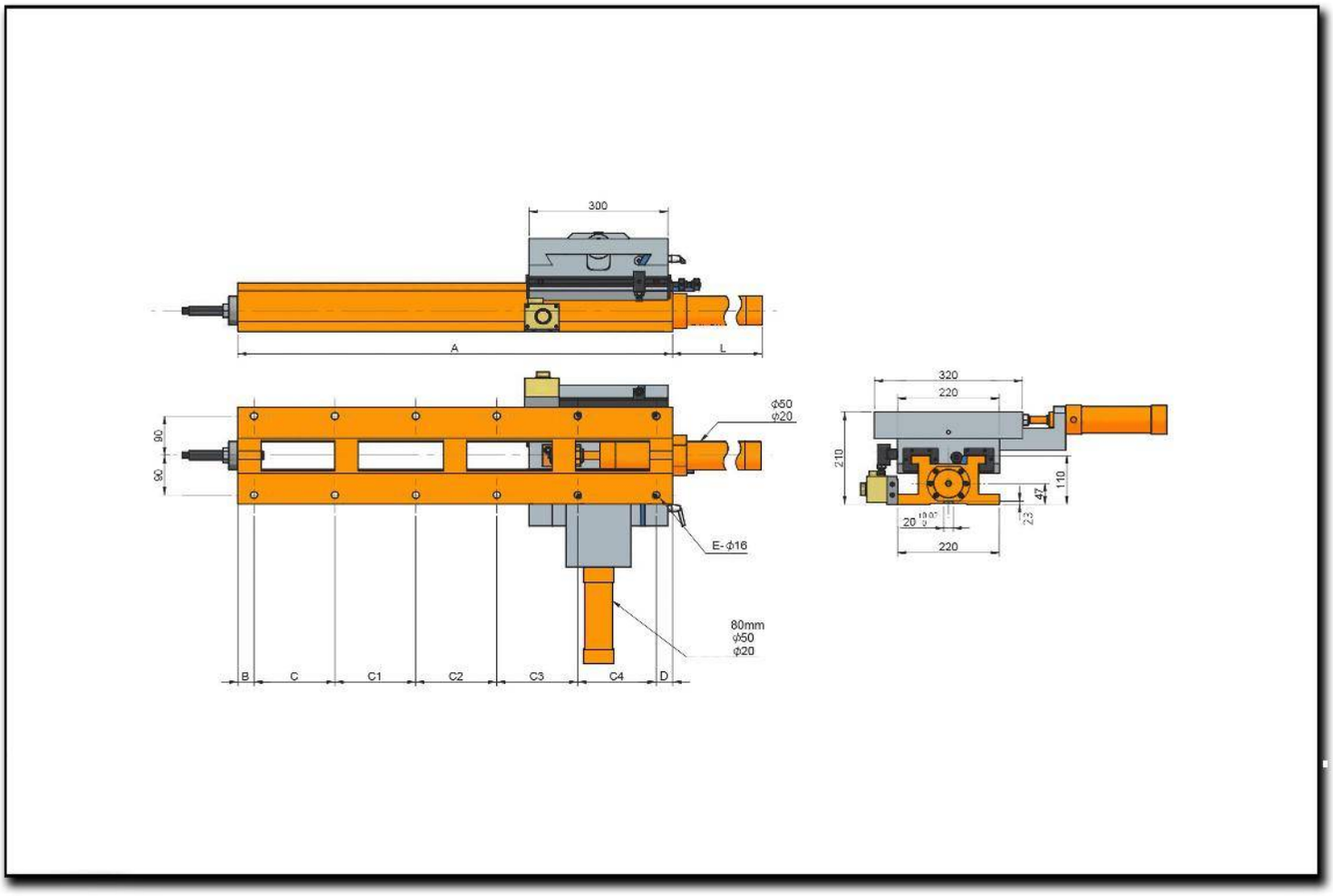
300
A
L
90
80
ϕ50
ϕ20
E- ϕ16
80mm
ϕ50
ϕ20
B
C
C1
C2
C3
C4
D
320
220
210
110
47
23
20
220

Characteristics & Dimensions

MODEL	CHH220-300/670
A	*670.00*
B	*35.00*
C	*140.00*
C1	*140.00*
C2	*140.00*
C3	*180.00*
C4	-
D	*35.00*
E	*10.00*
F	*332.00*
"X" Maximum Stroke	*350.00*
"Y" Maximum Stroke	*100.00*
Sliding Table Dimensions	*300.00 x 320.00*
Total Device Weight	*140.00*

***** All dimensions are given in millimeters.*

CHH220-300/800

Hydraulic Movement Crossed Sliding Table

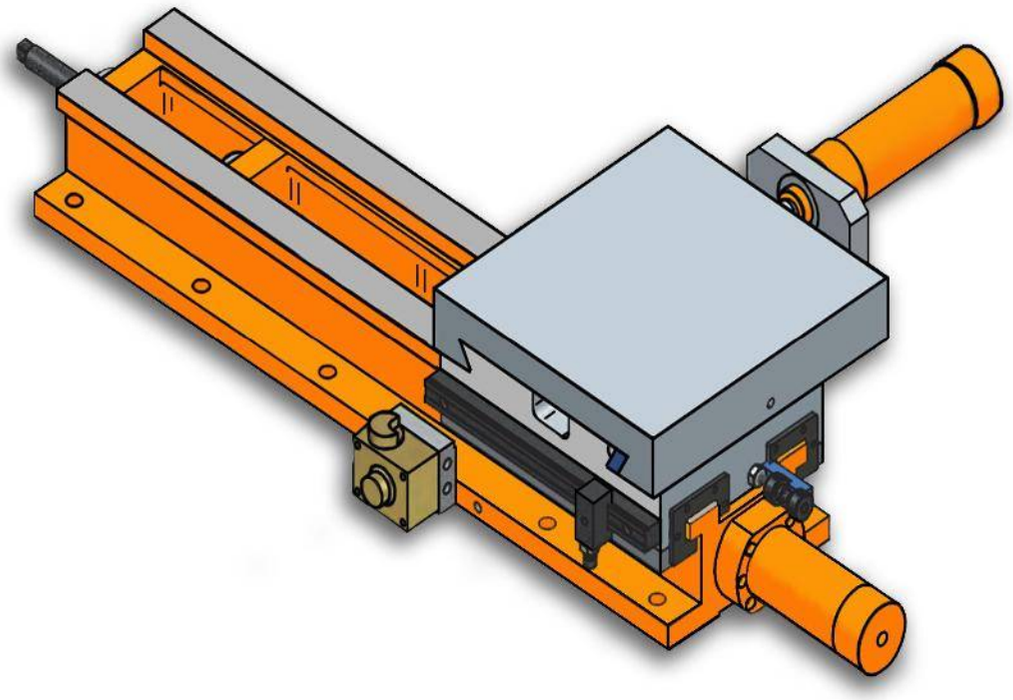

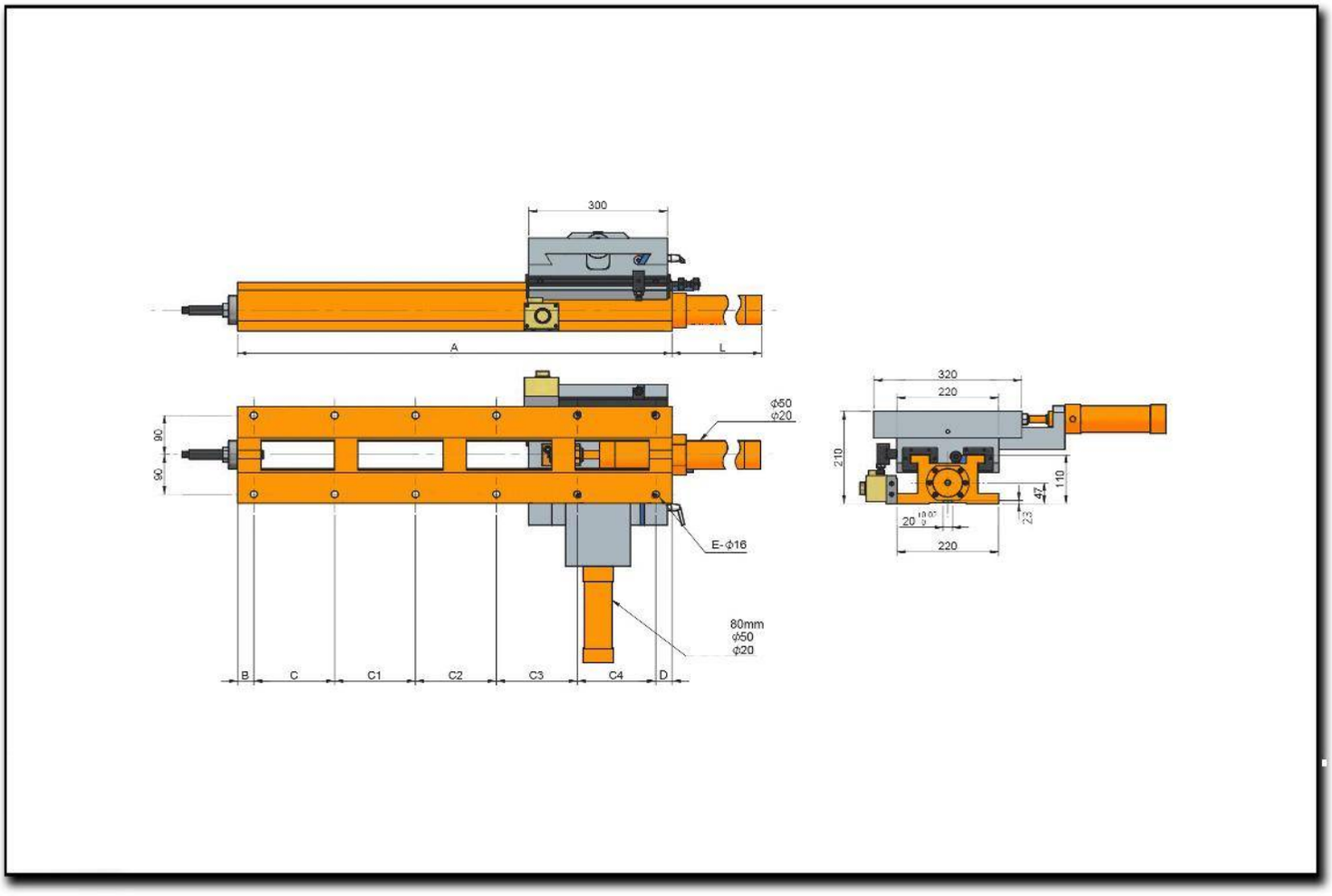
300
A
L
90
60
ϕ50
ϕ20
E-ϕ16
80mm
ϕ50
ϕ20
B
C
C1
C2
C3
C4
D
320
220
210
110
47
23
220

Characteristics & Dimensions

MODEL	CHH220-300/800
A	*800.00*
B	*35.00*
C	*140.00*
C1	*140.00*
C2	*140.00*
C3	*140.00*
C4	*170.00*
D	*35.00*
E	*12.00*
F	*462.00*
"X" Maximum Stroke	*480.00*
"Y" Maximum Stroke	*100.00*
Sliding Table Dimensions	*300.00 x 320.00*
Total Device Weight	*150.00*

***** All dimensions are given in millimeters.*

CHH220-300/940

Hydraulic Movement Crossed Sliding Table

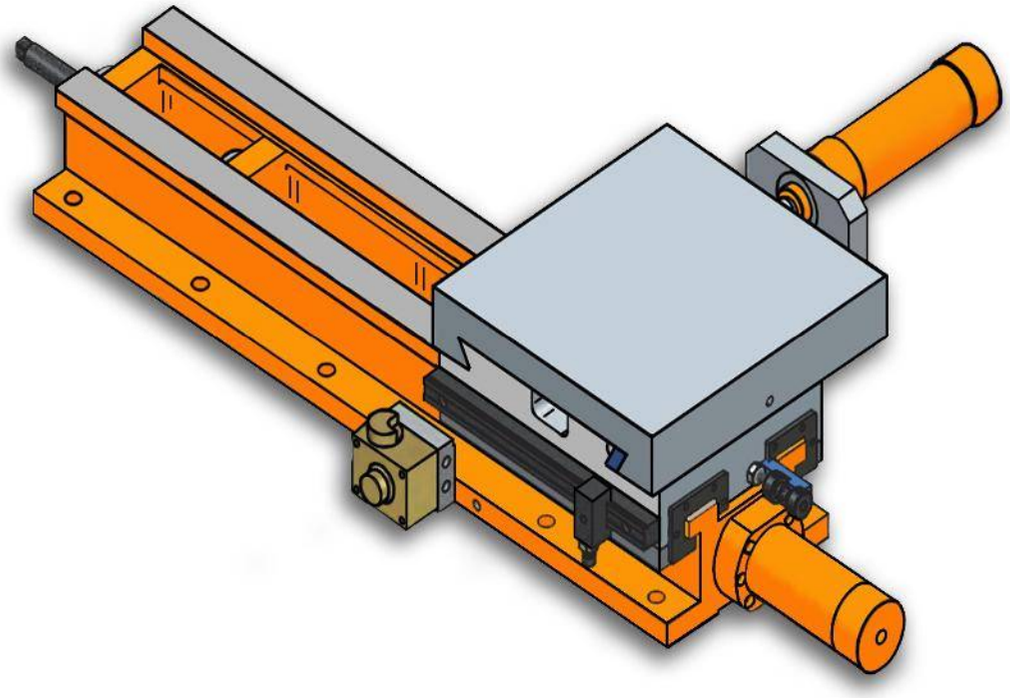

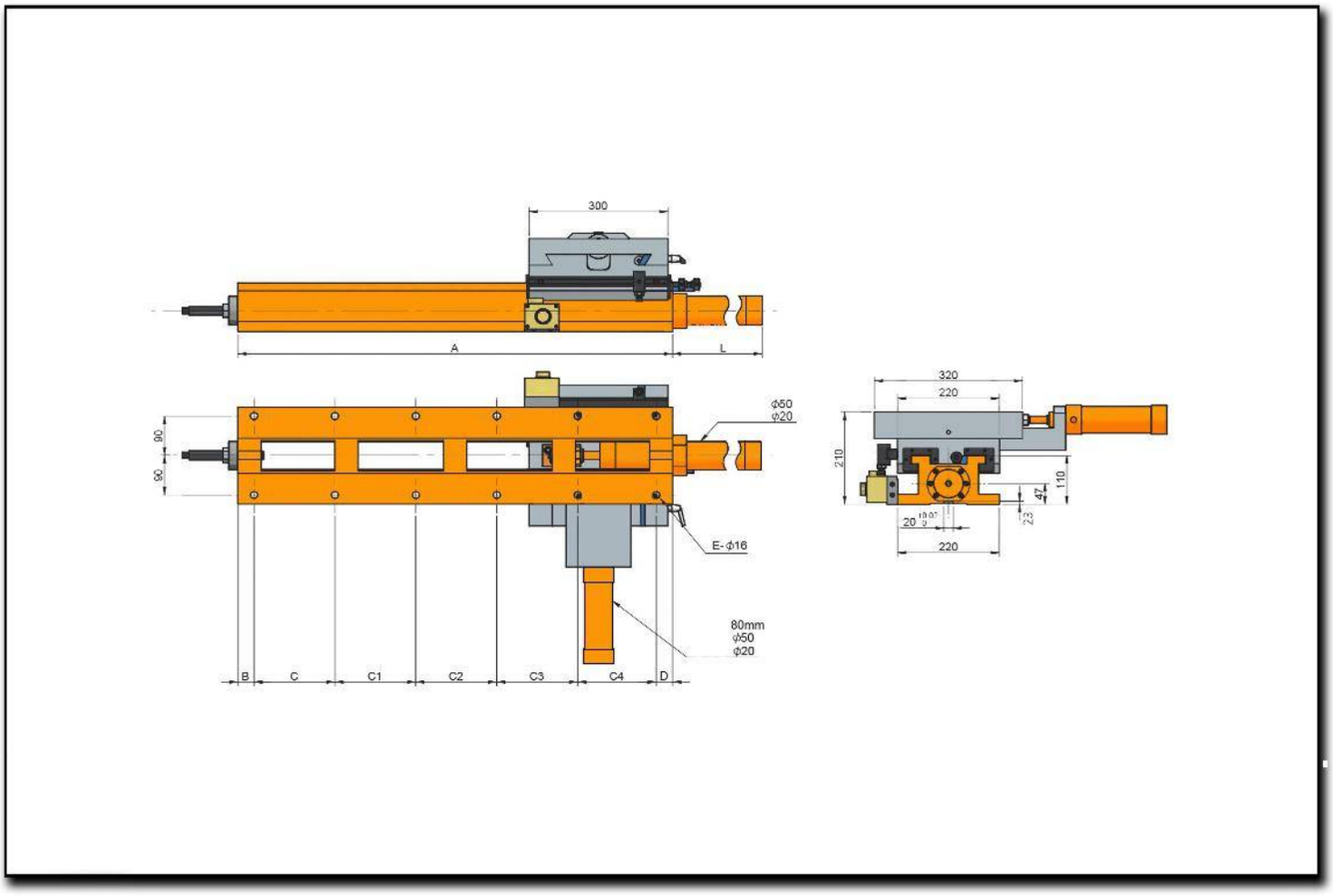
300
A
L
90
80
ϕ50
ϕ20
E- ϕ16
80mm
ϕ50
ϕ20
B
C
C1
C2
C3
C4
D
320
220
210
110
47
23
20
220

Characteristics & Dimensions

MODEL	CHH220-300/940
A	*940.00*
B	*35.00*
C	*175.00*
C1	*175.00*
C2	*175.00*
C3	*175.00*
C4	*170.00*
D	*35.00*
E	*12.00*
F	*602.00*
"X" Maximum Stroke	*620.00*
"Y" Maximum Stroke	*100.00*
Sliding Table Dimensions	*300.00 x 320.00*
Total Device Weight	*160.00*

***** All dimensions are given in millimeters.*

CHH300-300/420

Hydraulic Movement Crossed Sliding Table

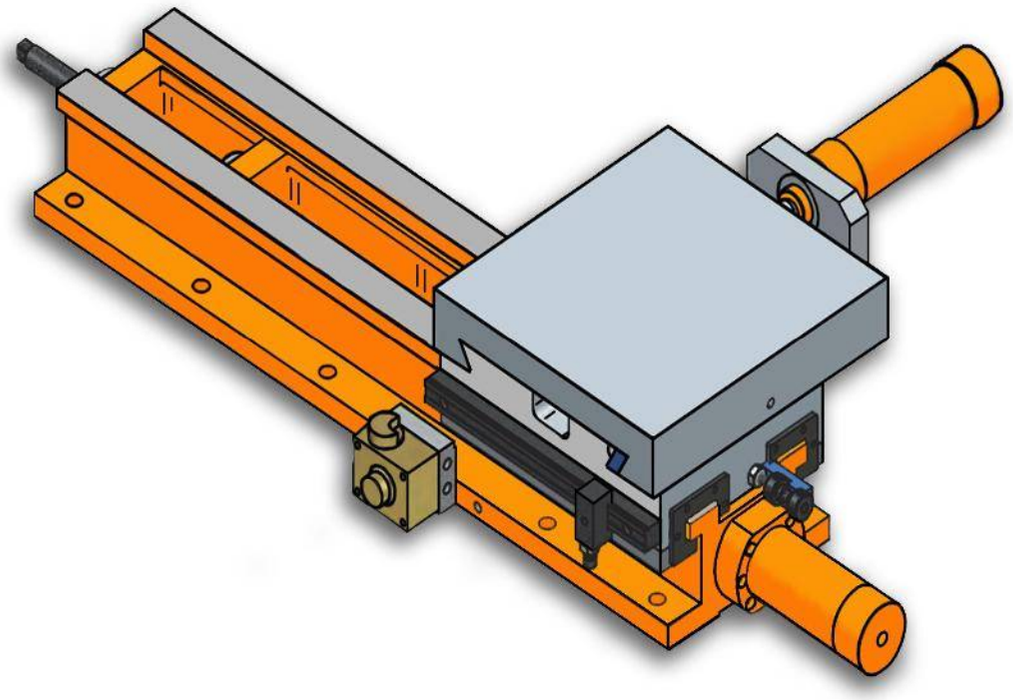

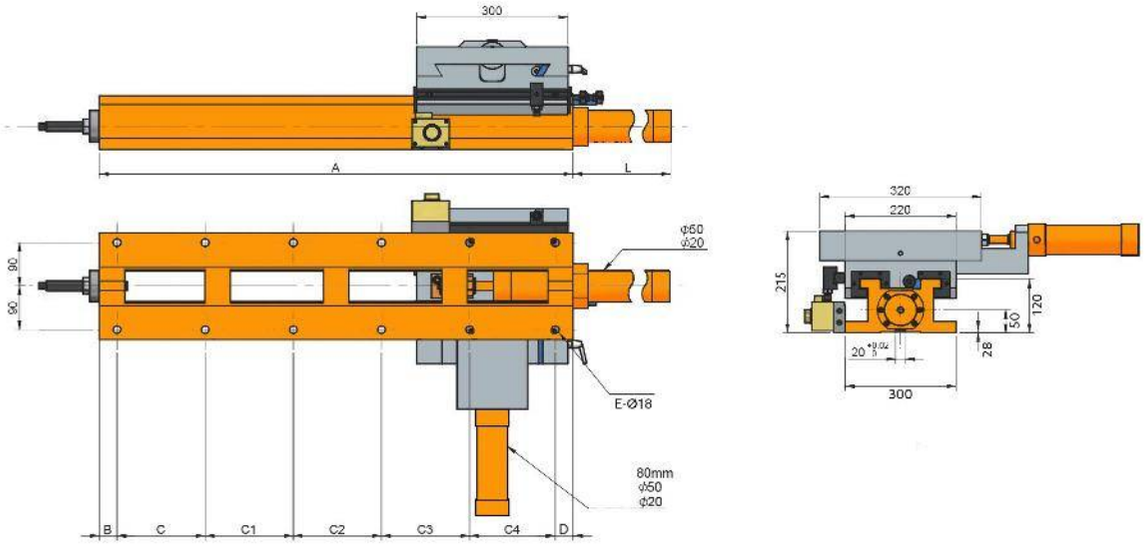
300
A
L
90
90
Φ60
Φ20
E-Ø18
80mm
Φ50
Φ20
B
C
C1
C2
C3
C4
D
320
220
215
120
50
28
300

Characteristics & Dimensions

MODEL	CHH300-300/420
A	*420.00*
B	*35.00*
C	*150.00*
C1	*200.00*
C2	-
C3	-
C4	-
C5	-
D	*35.00*
E	*6.00*
F	*65.00*
"X" Maximum Stroke	*100.00*
"Y" Maximum Stroke	*100.00*
Sliding Table Dimensions	*300.00 x 320.00*
Total Device Weight	*163.00*

**** All dimensions are given in millimeters.

CHH300-300/560

Hydraulic Movement Crossed Sliding Table

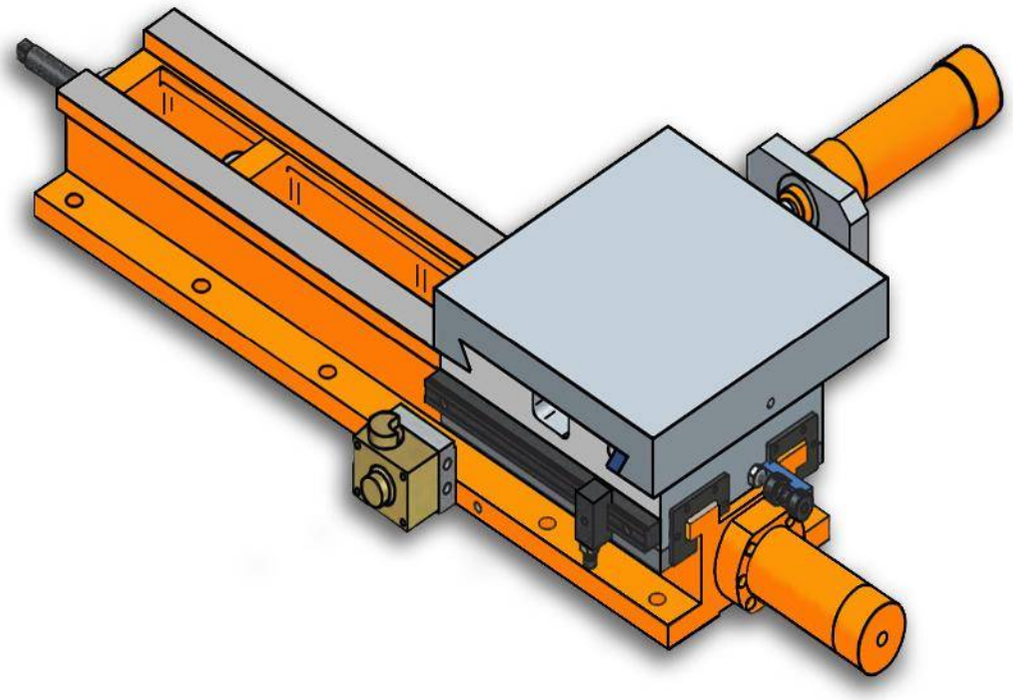

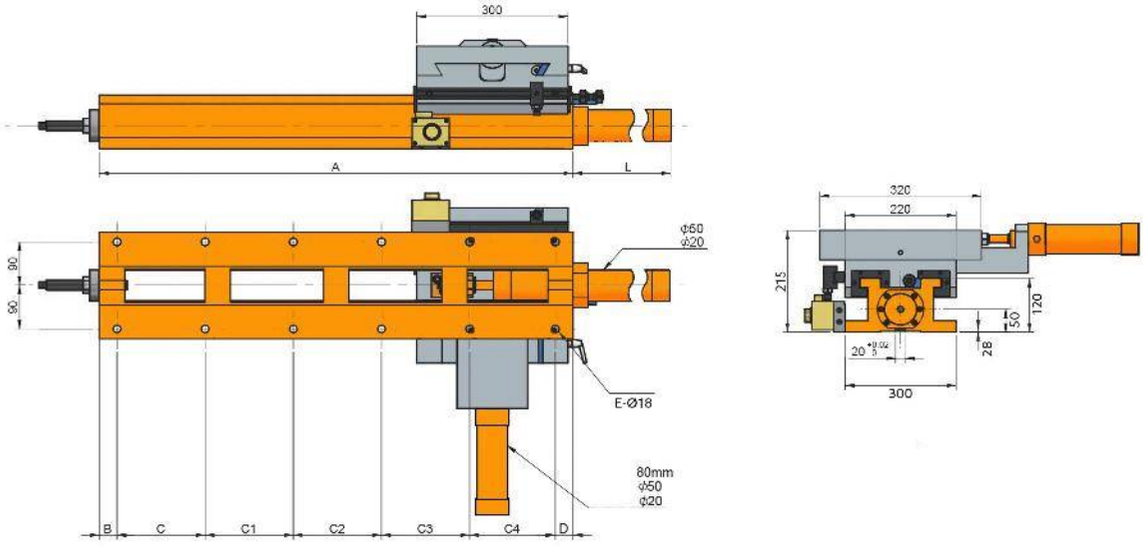
300
A
L
90
90
ϕ60
ϕ20
E-Ø18
80mm
ϕ50
ϕ20
B
C
C1
C2
C3
C4
D
320
220
215
120
50
28
300

Characteristics & Dimensions

MODEL	CHH300-300/560
A	*560.00*
B	*35.00*
C	*165.00*
C1	*165.00*
C2	*165.00*
C3	-
C4	-
C5	-
D	*30.00*
E	*8.00*
F	*222.00*
"X" Maximum Stroke	*240.00*
"Y" Maximum Stroke	*100.00*
Sliding Table Dimensions	*300.00 x 320.00*
Total Device Weight	*173.00*

**** All dimensions are given in millimeters.

CHH300-300/670

Hydraulic Movement Crossed Sliding Table

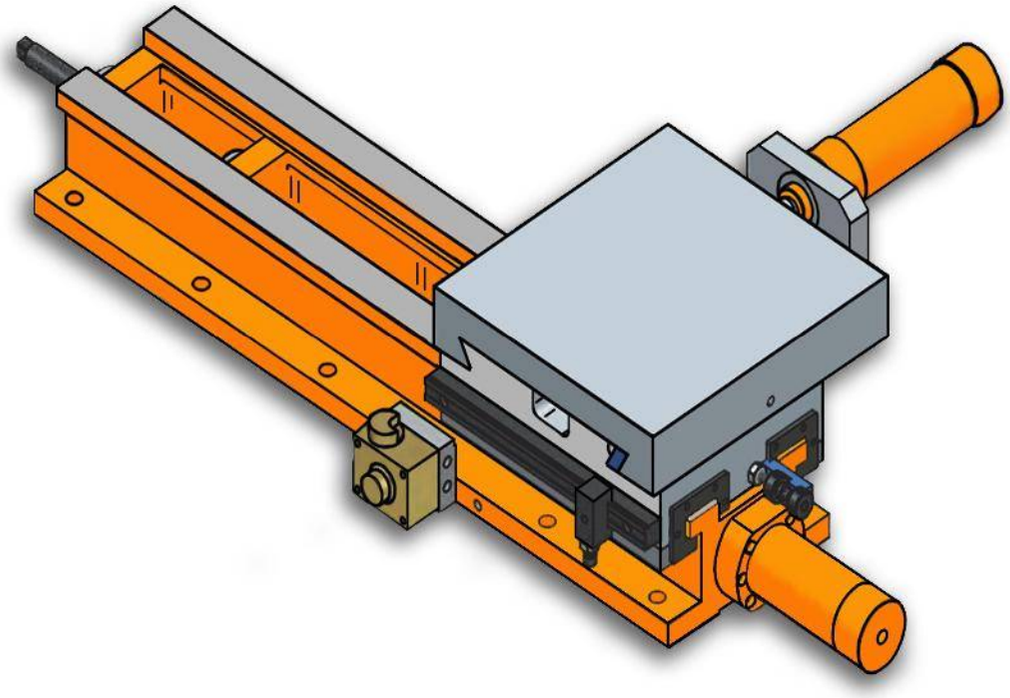

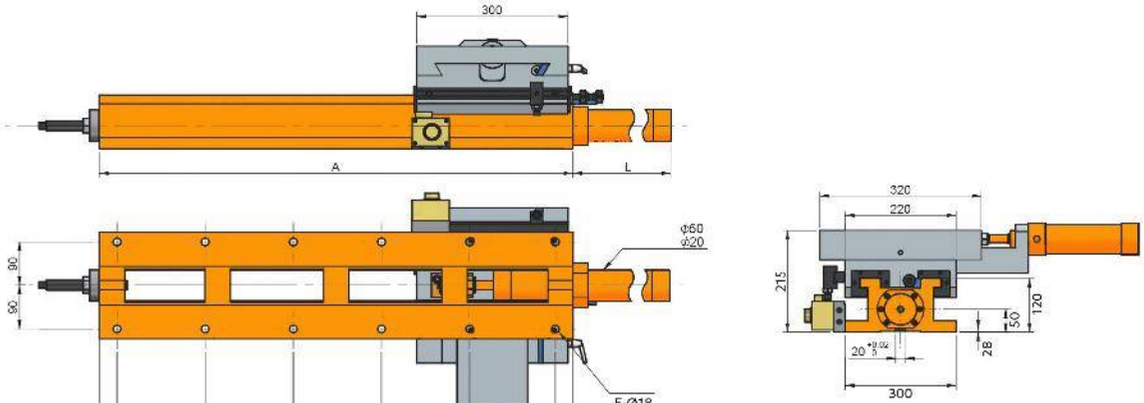
300
A
L
90
90
ϕ60
ϕ20
E-Ø18
80mm
ϕ50
ϕ20
B
C
C1
C2
C3
C4
D
320
220
215
120
50
28
300

Characteristics & Dimensions

MODEL	CHH300-300/670
A	670.00
B	35.00
C	140.00
C1	140.00
C2	140.00
C3	180.00
C4	-
C5	-
D	35.00
E	10.00
F	332.00
"X" Maximum Stroke	350.00
"Y" Maximum Stroke	100.00
Sliding Table Dimensions	300.00 x 320.00
Total Device Weight	193.00

**** All dimensions are given in millimeters.

CHH300-300/800

Hydraulic Movement Crossed Sliding Table

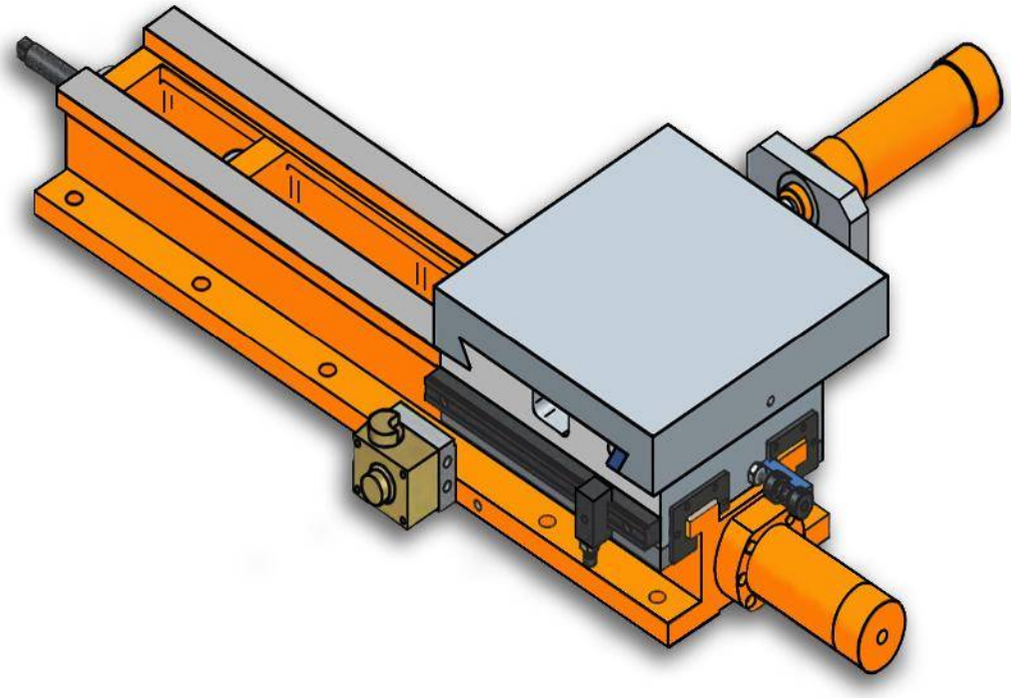

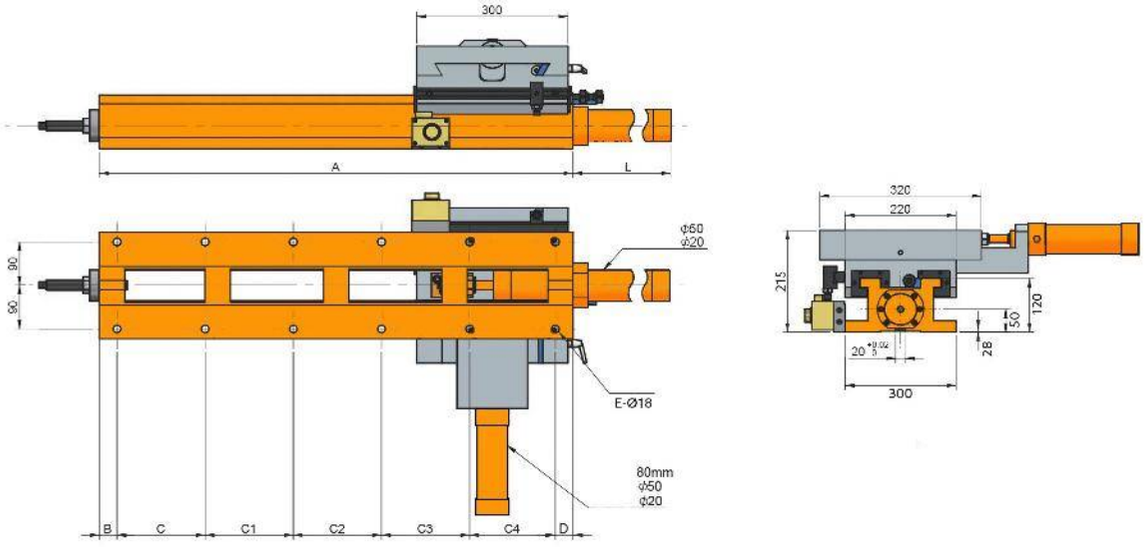
300
A
L
90
90
ϕ60
ϕ20
E-Ø18
80mm
ϕ50
ϕ20
B
C
C1
C2
C3
C4
D
320
220
215
120
50
28
300

Characteristics & Dimensions

MODEL	CHH300-300/800
A	*800.00*
B	*35.00*
C	*140.00*
C1	*140.00*
C2	*140.00*
C3	*140.00*
C4	*170.00*
C5	-
D	*35.00*
E	*12.00*
F	*462.00*
"X" Maximum Stroke	*480.00*
"Y" Maximum Stroke	*100.00*
Sliding Table Dimensions	*300.00 x 320.00*
Total Device Weight	*243.00*

**** All dimensions are given in millimeters.

CHH300-300/940

Hydraulic Movement Crossed Sliding Table

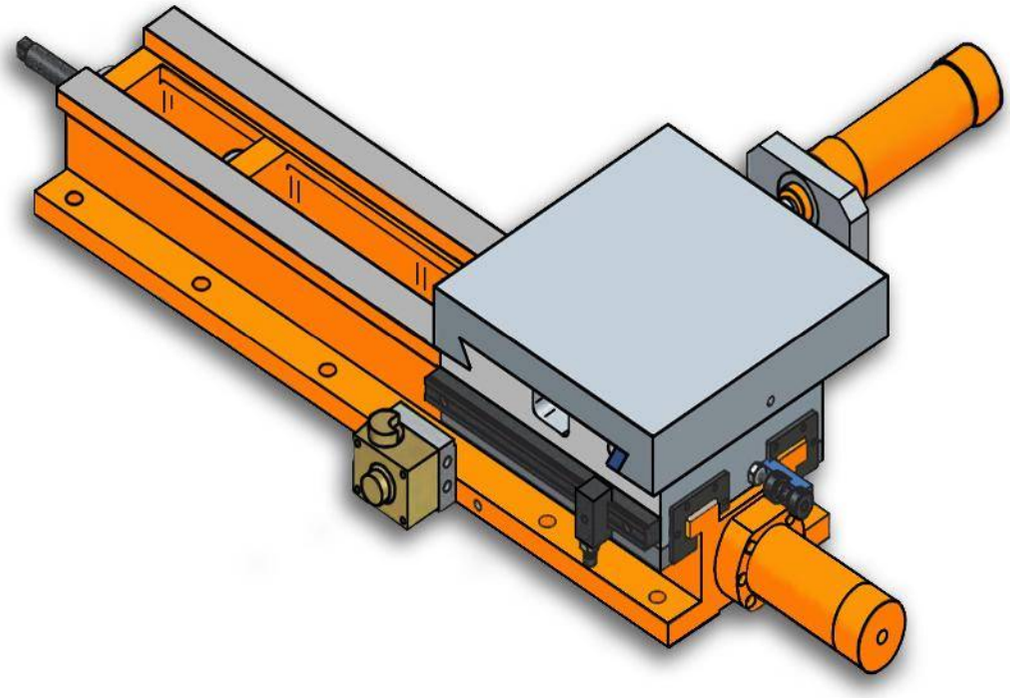

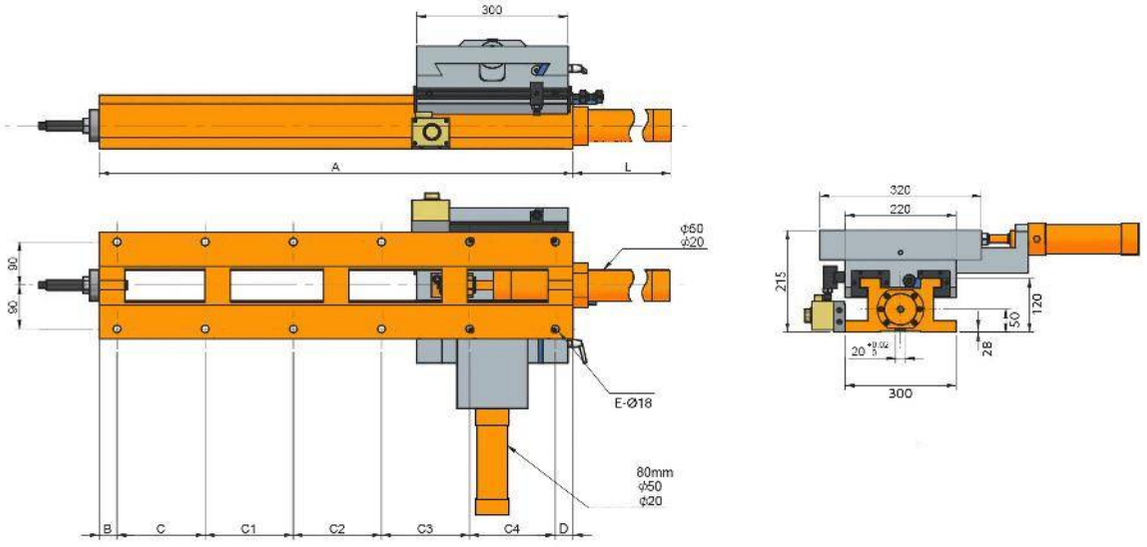
300
A
L
90
90
ϕ60
ϕ20
E-Ø18
80mm
ϕ50
ϕ20
B
C
C1
C2
C3
C4
D
320
220
215
120
50
28
300

Characteristics & Dimensions

MODEL	CHH300-300/940
A	*940.00*
B	*35.00*
C	*175.00*
C1	*175.00*
C2	*175.00*
C3	*175.00*
C4	*175.00*
C5	-
D	*30.00*
E	*12.00*
F	*602.00*
"X" Maximum Stroke	*620.00*
"Y" Maximum Stroke	*100.00*
Sliding Table Dimensions	*300.00 x 320.00*
Total Device Weight	*260.00*

**** All dimensions are given in millimeters.

CHH300-300/1200

Hydraulic Movement Crossed Sliding Table

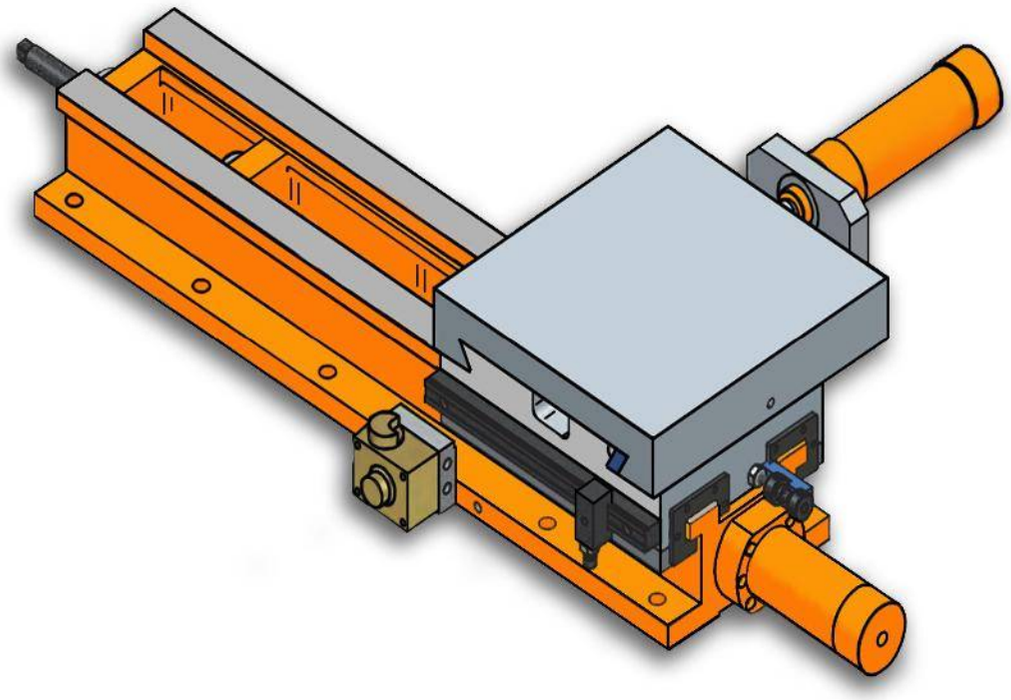

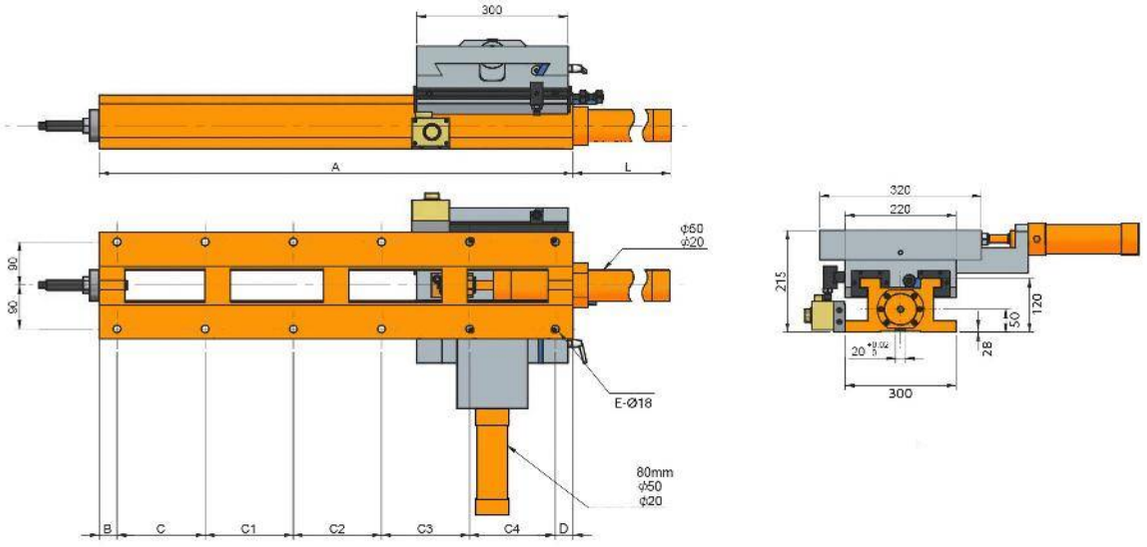
300
A
L
90
90
ϕ60
ϕ20
E-Ø18
80mm
ϕ50
ϕ20
B
C
C1
C2
C3
C4
D
320
220
215
120
50
28
300

Characteristics & Dimensions

MODEL	CHH300-300/1200
A	*1200.00*
B	*30.00*
C	*190.00*
C1	*190.00*
C2	*190.00*
C3	*190.00*
C4	*190.00*
C5	*190.00*
D	*30.00*
E	*14.00*
F	*862.00*
"X" Maximum Stroke	*880.00*
"Y" Maximum Stroke	*100.00*
Sliding Table Dimensions	*300.00 x 320.00*
Total Device Weight	*285.00*

**** All dimensions are given in millimeters.

CHH-H SERIES

REINFORCED HYDRAULIC CROSSED SLIDE TABLE

CHH300-300/420H

Mesa Cruzada Con Desplazamiento Hidráulico De Servicio Pesado

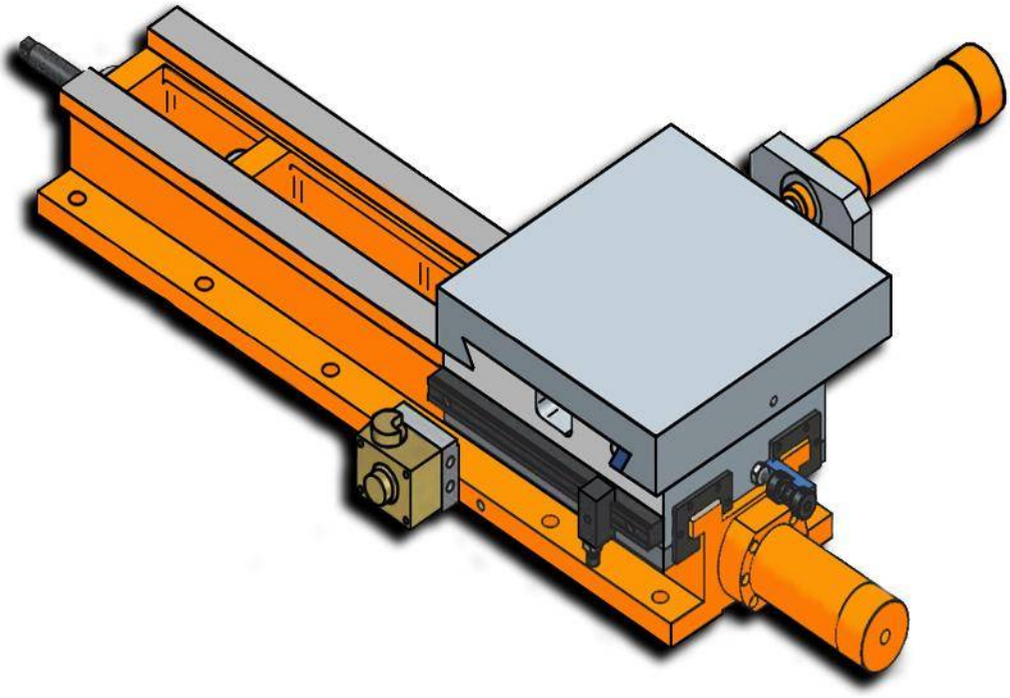

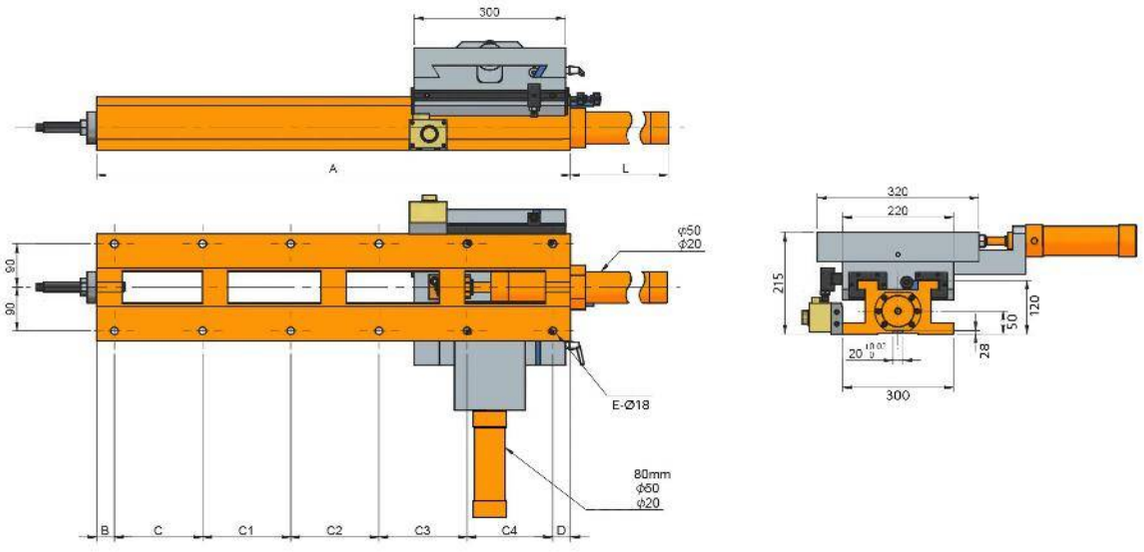
300
A
L
90
90
ϕ50
ϕ20
E-Ø18
80mm
ϕ60
ϕ20
B
C
C1
C2
C3
C4
D
320
220
215
120
50
28
300

Characteristics & Dimensions

MODEL	CHH300-300/420H
A	*420.00*
B	*35.00*
C	*150.00*
C1	*200.00*
C2	-
C3	-
C4	-
C5	-
D	*35.00*
E	*6.00*
F	*75.00*
"X" Maximum Stroke	*100.00*
"Y" Maximum Stroke	*100.00*
Sliding Table Dimensions	*300.00 x 320.00*
Total Device Weight	*183.00*

**** All dimensions are given in millimeters.

CHH300-300/560H

Hi Performance Hydraulic Movement Crossed Sliding Table

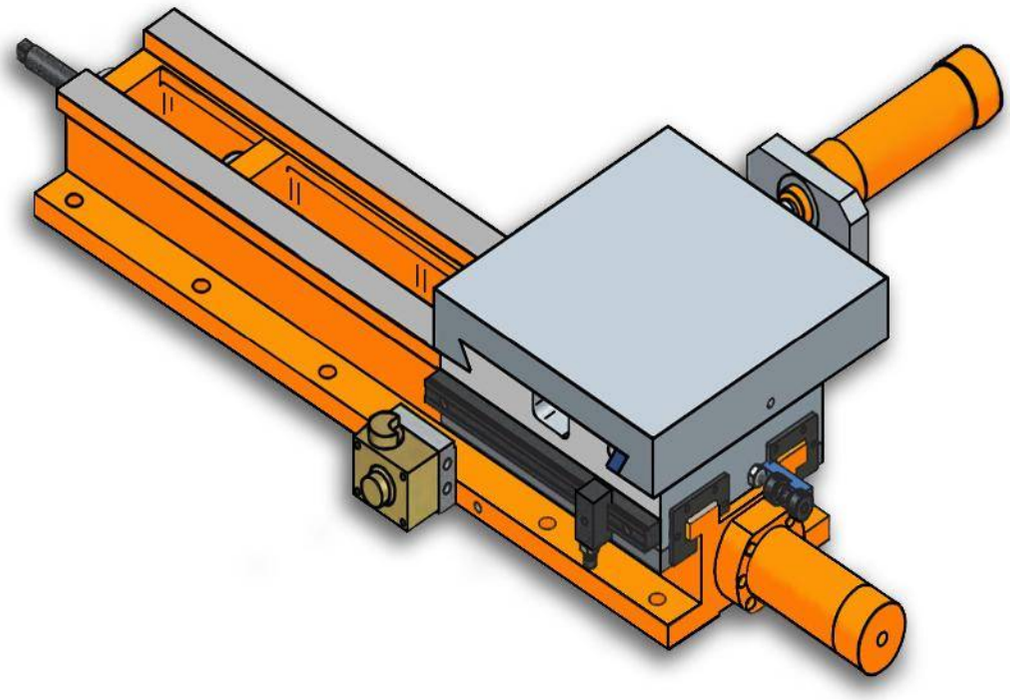

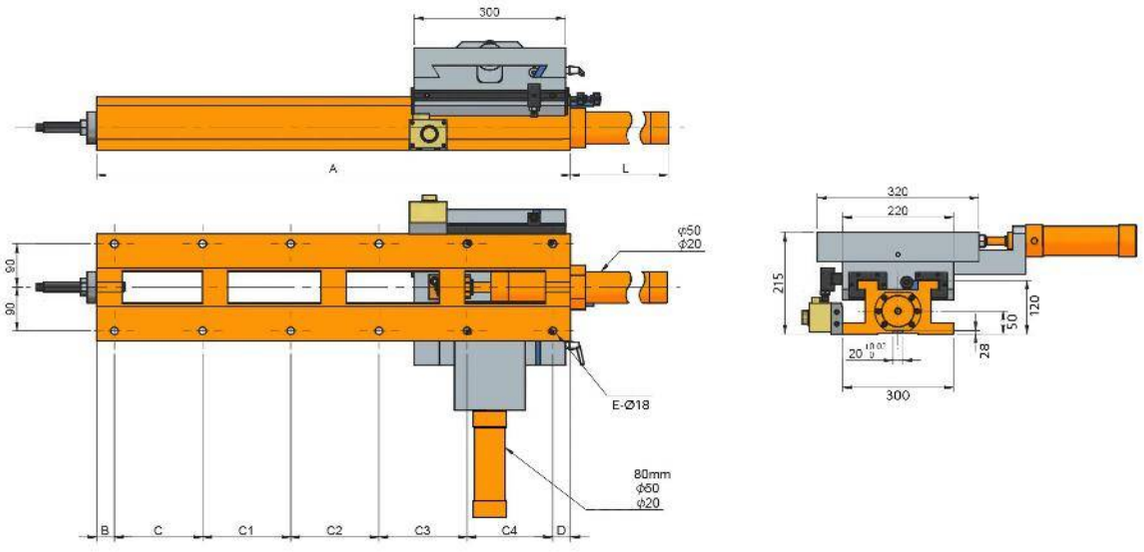
300
A
L
90
90
ϕ50
ϕ20
E-Ø18
80mm
ϕ60
ϕ20
B
C
C1
C2
C3
C4
D
320
220
215
120
50
28
300

Characteristics & Dimensions

MODEL	CHH300-300/560H
A	*560.00*
B	*35.00*
C	*165.00*
C1	*165.00*
C2	*165.00*
C3	-
C4	-
C5	-
D	*30.00*
E	*8.00*
F	*224.00*
"X" Maximum Stroke	*240.00*
"Y" Maximum Stroke	*100.00*
Sliding Table Dimensions	*300.00 x 320.00*
Total Device Weight	*198.00*

**** All dimensions are given in millimeters.

CHH300-300/670H

Hi Performance
Hydraulic Movement
Crossed Sliding Table

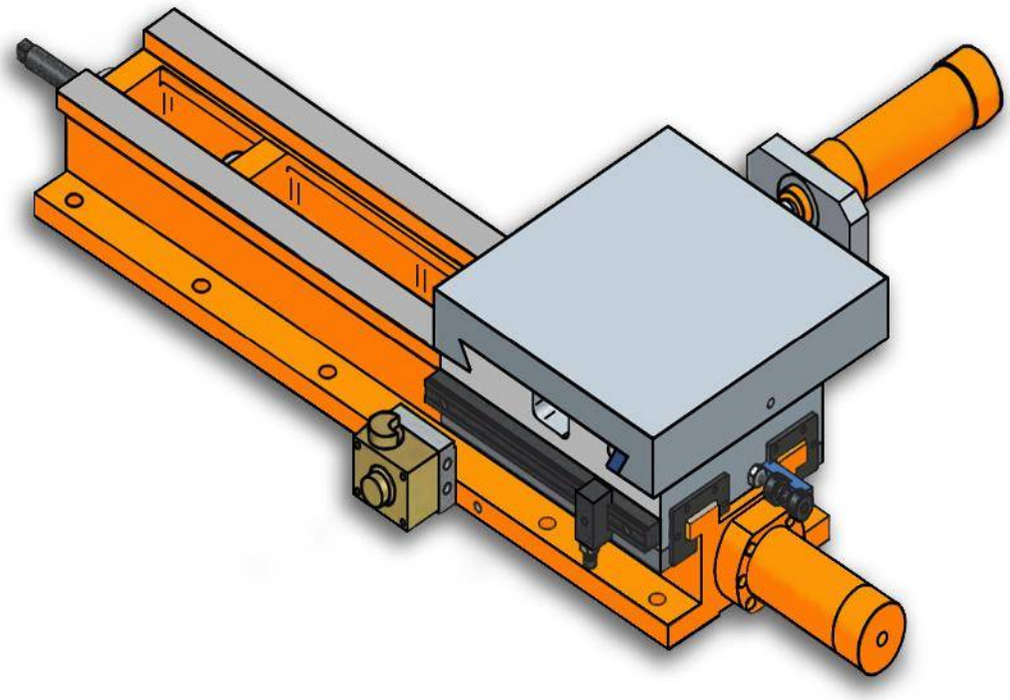

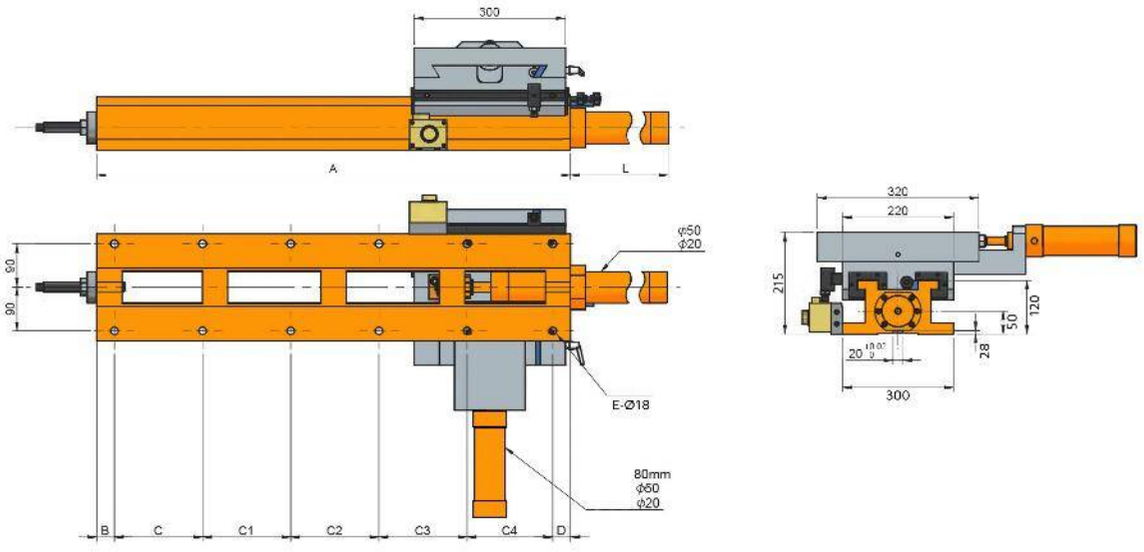
300
A
L
90
90
ϕ50
ϕ20
E-Ø18
80mm
ϕ60
ϕ20
B
C
C1
C2
C3
C4
D
320
220
215
120
50
28
300

Characteristics & Dimensions

MODEL	CHH300-300/670H
A	*670.00*
B	*35.00*
C	*140.00*
C1	*140.00*
C2	*140.00*
C3	*180.00*
C4	-
C5	-
D	*35.00*
E	*10.00*
F	*335.00*
"X" Maximum Stroke	*350.00*
"Y" Maximum Stroke	*100.00*
Sliding Table Dimensions	*300.00 x 320.00*
Total Device Weight	*240.00*

**** All dimensions are given in millimeters.

CHH300-300/800H

Hi Performance Hydraulic Movement Crossed Sliding Table

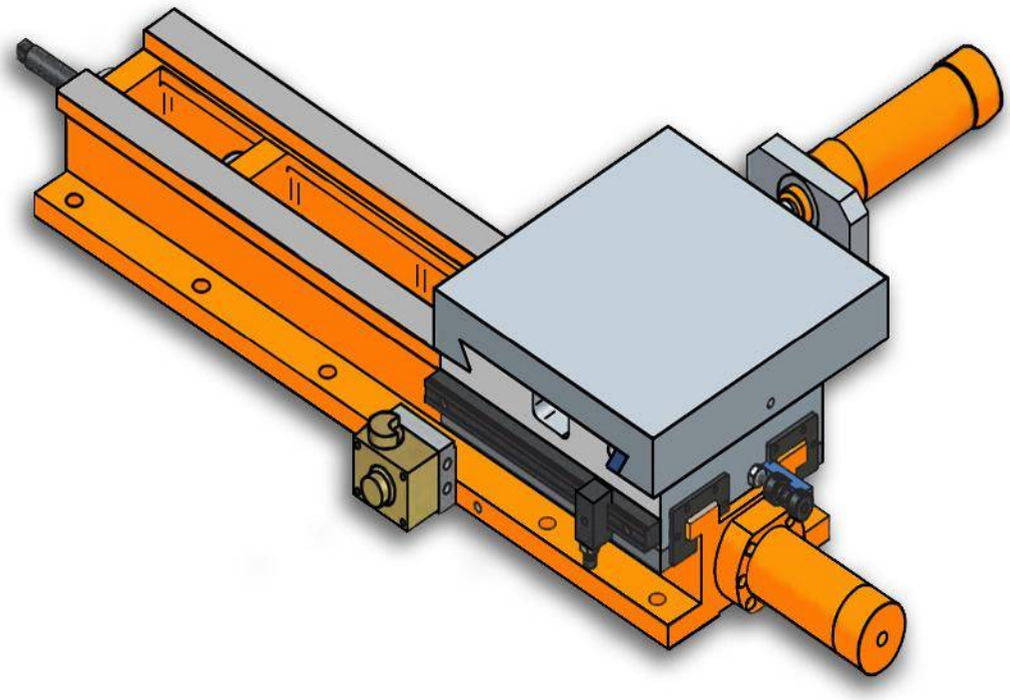

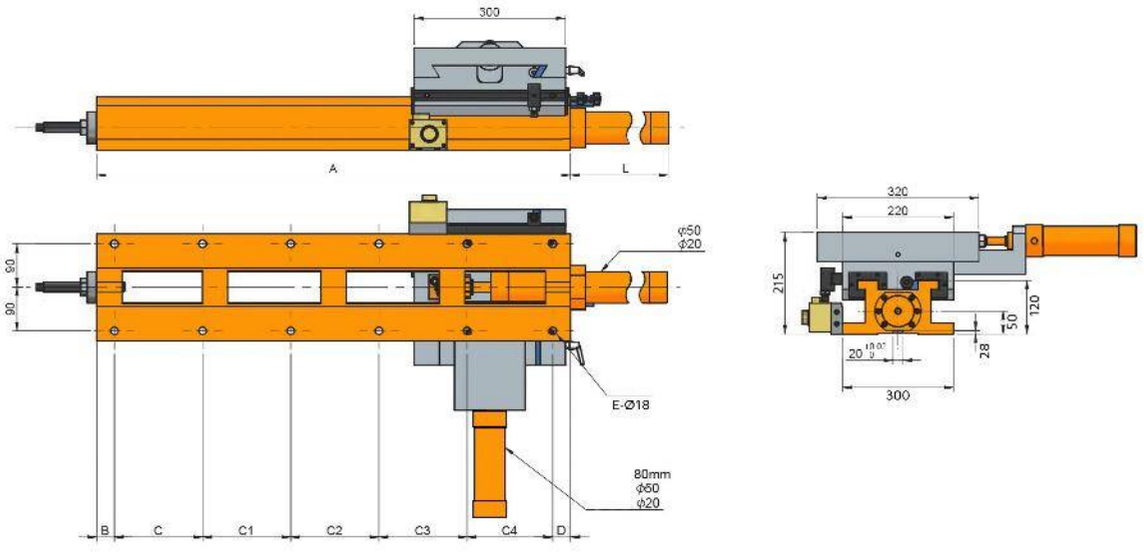
300
A
L
90
90
ϕ50
ϕ20
E-Ø18
80mm
ϕ60
ϕ20
B
C
C1
C2
C3
C4
D
320
220
215
120
50
28
300

Characteristics & Dimensions

MODEL	CHH300-300/800H
A	*800.00*
B	*35.00*
C	*140.00*
C1	*140.00*
C2	*140.00*
C3	*140.00*
C4	*170.00*
C5	-
D	*35.00*
E	*12.00*
F	*465.00*
"X" Maximum Stroke	*480.00*
"Y" Maximum Stroke	*100.00*
Sliding Table Dimensions	*300.00 x 320.00*
Total Device Weight	*251.00*

**** All dimensions are given in millimeters.

CHH300-300/940H

Hi Performance Hydraulic Movement Crossed Sliding Table

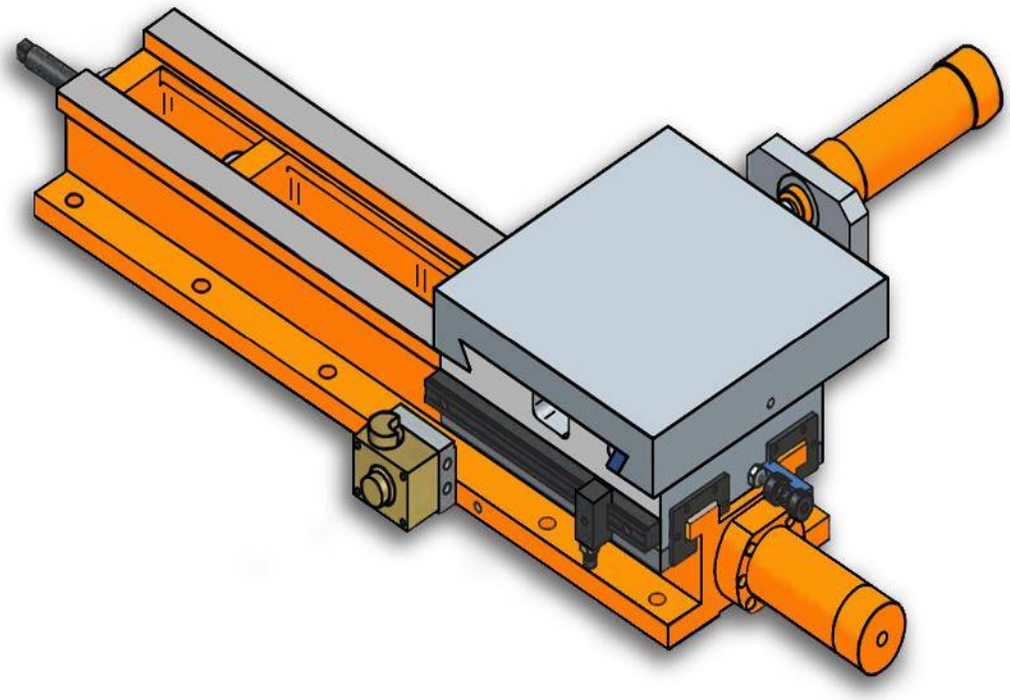

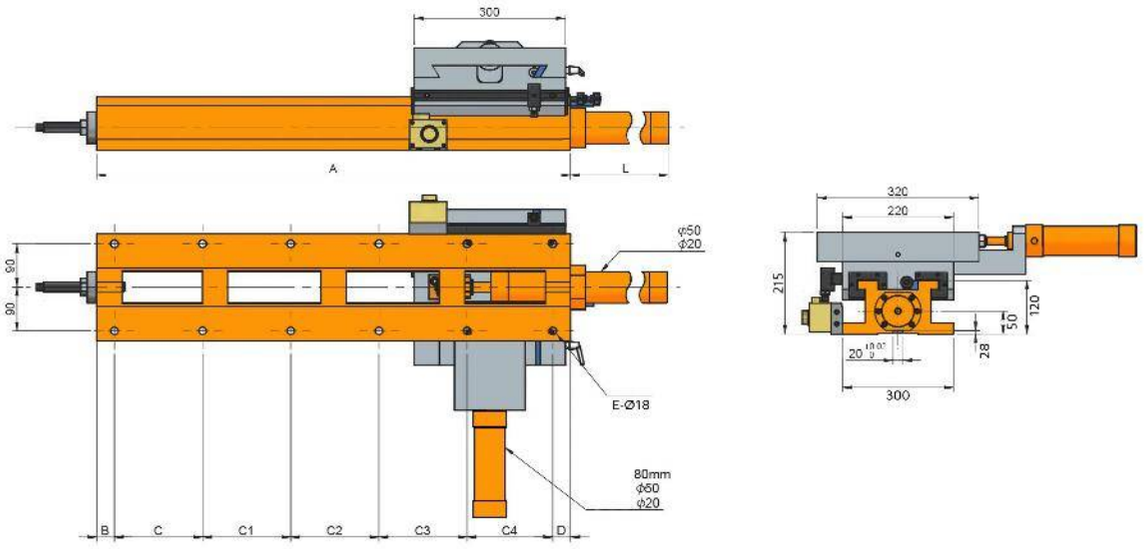
300
A
L
90
90
ϕ50
ϕ20
E-Ø18
80mm
ϕ60
ϕ20
B
C
C1
C2
C3
C4
D
320
220
215
120
50
28
300

Characteristics & Dimensions

MODEL	CHH300-300/940H
A	*940.00*
B	*35.00*
C	*175.00*
C1	*175.00*
C2	*175.00*
C3	*175.00*
C4	*175.00*
C5	-
D	*30.00*
E	*12.00*
F	*608.00*
"X" Maximum Stroke	*620.00*
"Y" Maximum Stroke	*100.00*
Sliding Table Dimensions	*300.00 x 320.00*
Total Device Weight	*266.00*

**** All dimensions are given in millimeters.

CHH300-300/1200H

Hi Performance
Hydraulic Movement
Crossed Sliding Table

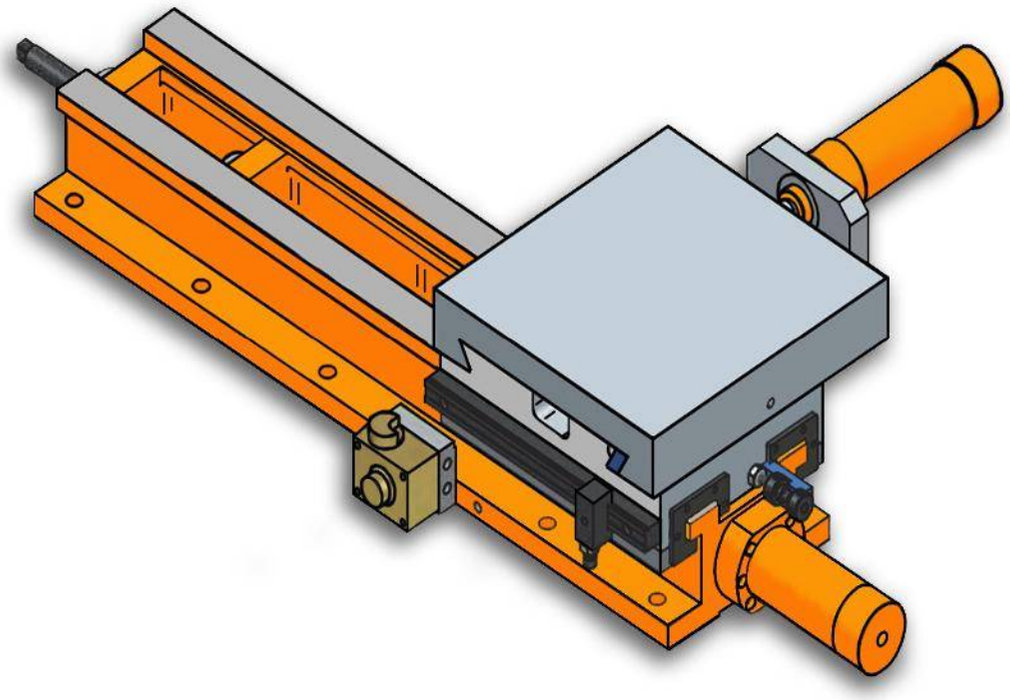

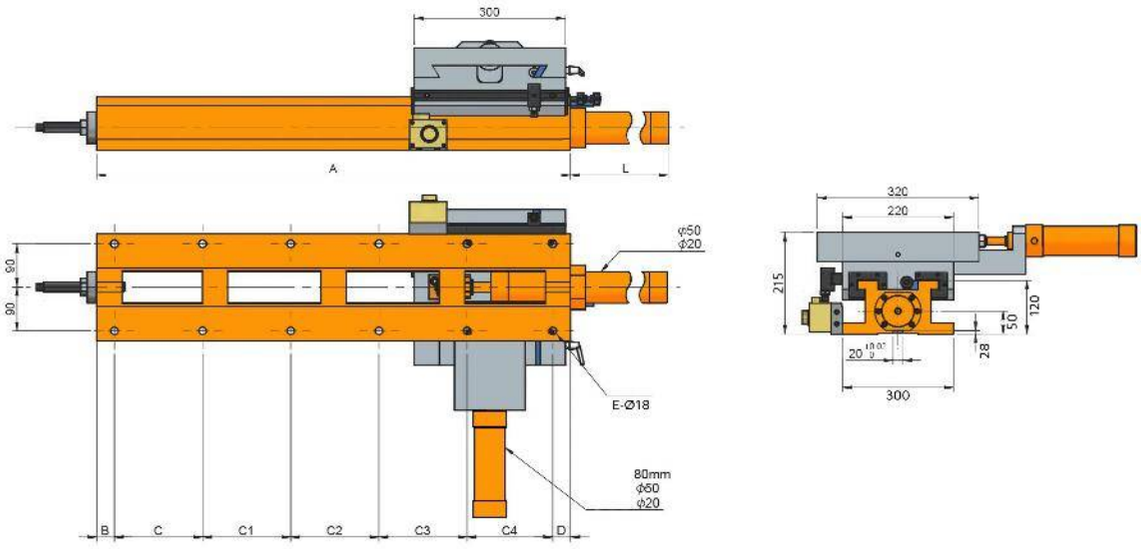
300
A
L
90
90
ϕ50
ϕ20
E-Ø18
80mm
ϕ60
ϕ20
B
C
C1
C2
C3
C4
D
320
220
215
120
50
28
300

Characteristics & Dimensions

MODEL	CHH300-300/1200H
A	*1200.00*
B	*30.00*
C	*190.00*
C1	*190.00*
C2	*190.00*
C3	*190.00*
C4	*190.00*
C5	*190.00*
D	*30.00*
E	*14.00*
F	*868.00*
"X" Maximum Stroke	*880.00*
"Y" Maximum Stroke	*100.00*
Sliding Table Dimensions	*300.00 x 320.00*
Total Device Weight	*289.00*

**** All dimensions are given in millimeters.

CHS SERIES

MIXED CROSSED TABLES (HYDRAULIC + MANUAL)

CHS220-300/420

Mixed Crossed Sliding Table

(Hydraulic + Manual Movement)

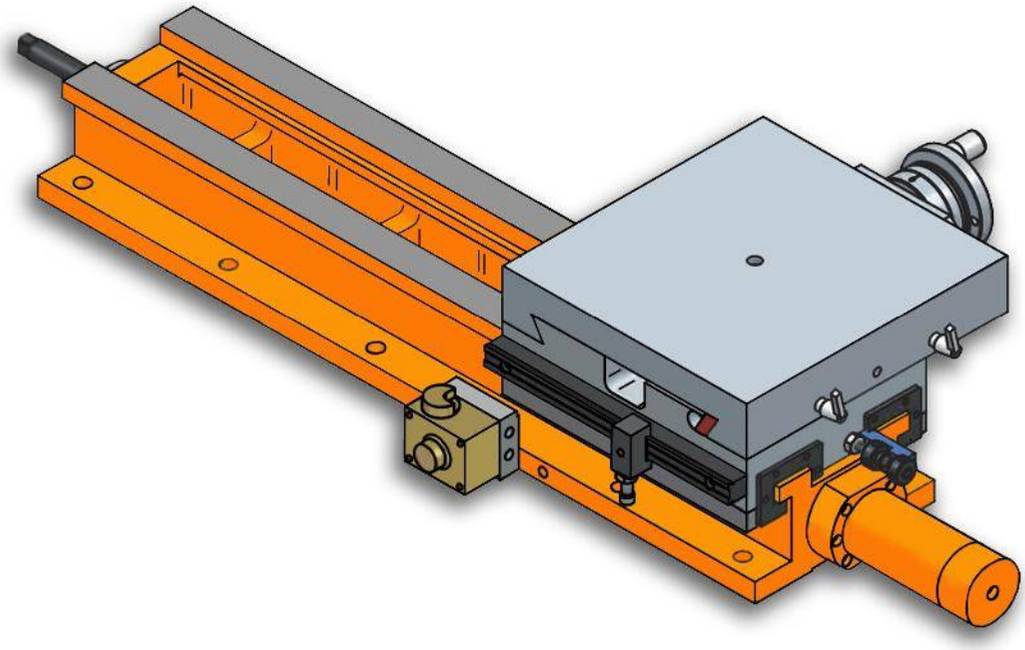

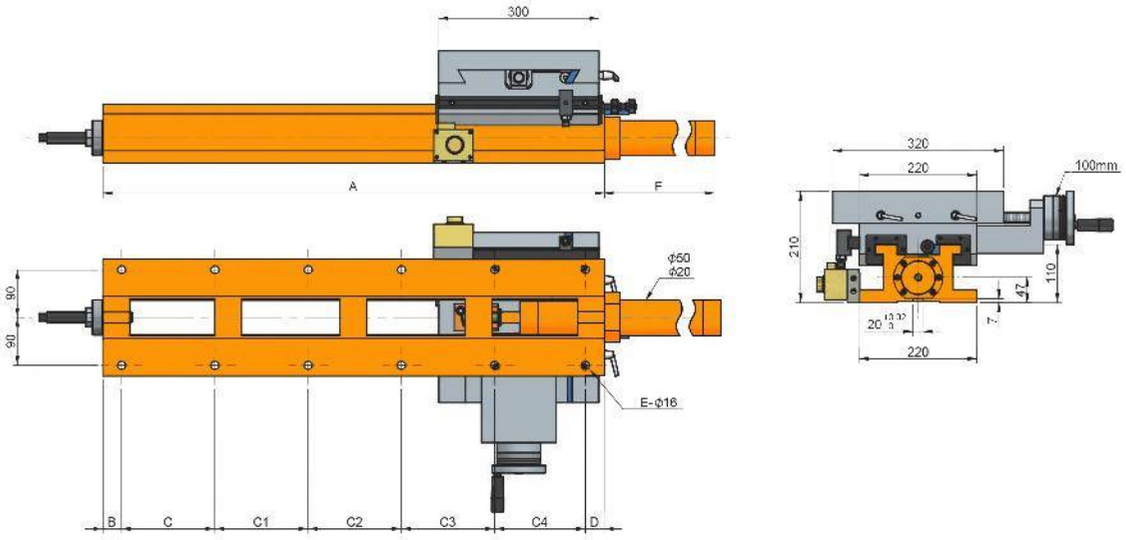
300
A
F
ϕ50
ϕ20
90
90
E-ϕ16
B
C
C1
C2
C3
C4
D
320
220
100mm
210
110
47
7
220

Characteristics & Dimensions

Model	CHS220-300/420
A	*420.00*
B	*35.00*
C	*150.00*
C1	*200.00*
C2	-
C3	-
C4	-
C5	-
D	*35.00*
E	*6.00*
F	*65.00*
Maximum Stroke In "X" Axis	*120.00*
Maximum Stroke In "Y" Axis	*100.00*
Sliding Table Dimensions	*300.00 x 320.00*
Device Total Weight	*108.00*

***** All dimensions are given in millimeters.*

CHS220-300/520

Mixed Crossed Sliding Table

(Hydraulic + Manual Movement)

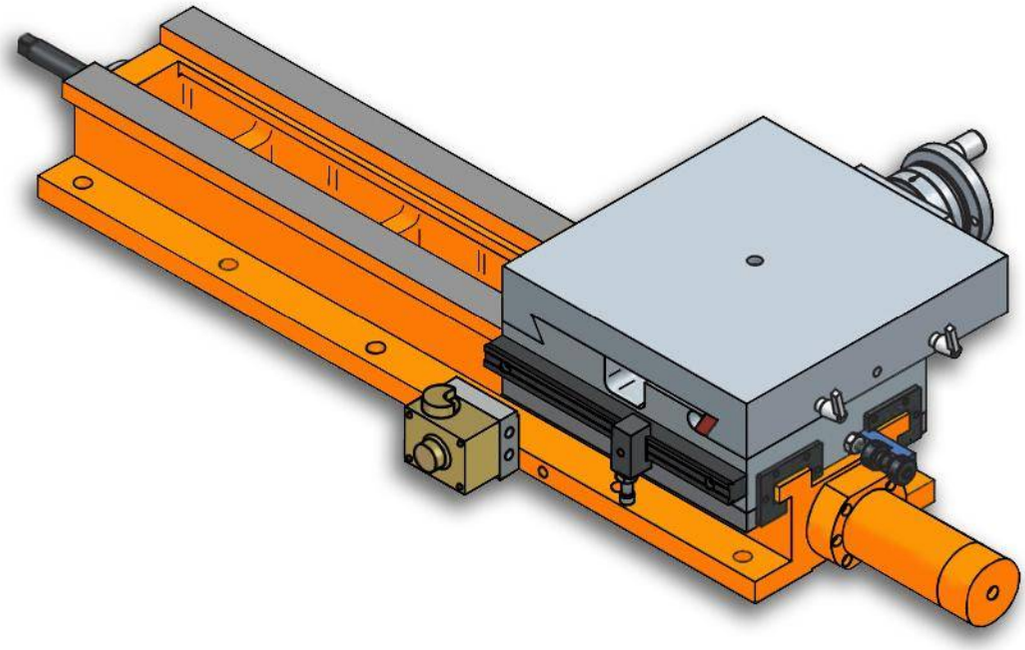

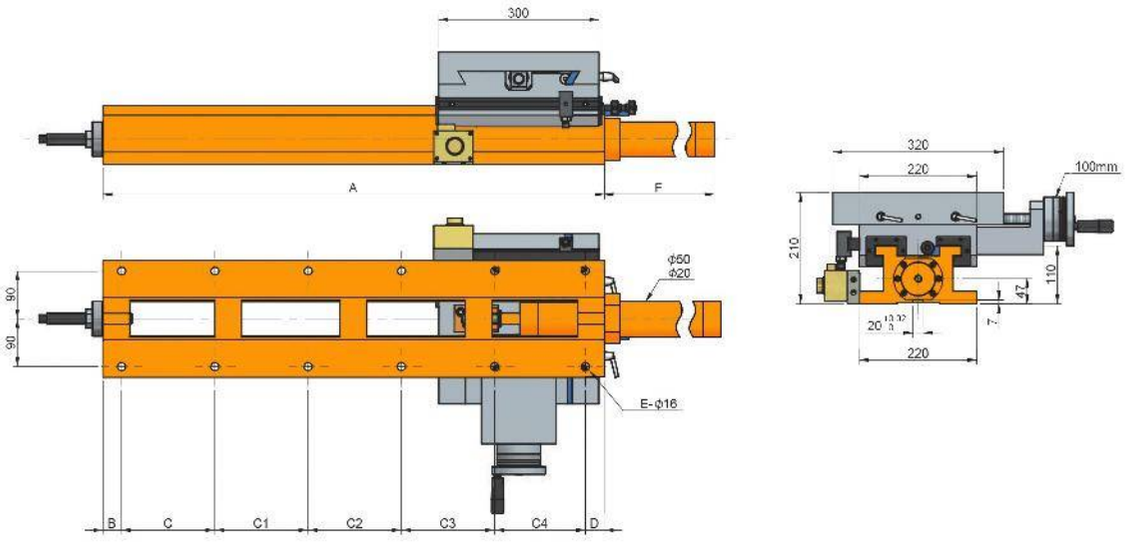
300
A
F
ϕ50
ϕ20
90
90
E-ϕ16
B
C
C1
C2
C3
C4
D
320
220
100mm
210
110
47
7
220

Characteristics & Dimensions

Model	CHS220-300/520
A	*520.00*
B	*35.00*
C	*150.00*
C1	*150.00*
C2	*150.00*
C3	-
C4	-
C5	-
D	*35.00*
E	*8.00*
F	*182.00*
Maximum Stroke In "X" Axis	*200.00*
Maximum Stroke In "Y" Axis	*100.00*
Sliding Table Dimensions	*300.00 x 320.00*
Device Total Weight	*125.00*

***** All dimensions are given in millimeters.*

CHS220-300/670

Mixed Crossed Sliding Table

(Hydraulic + Manual Movement)

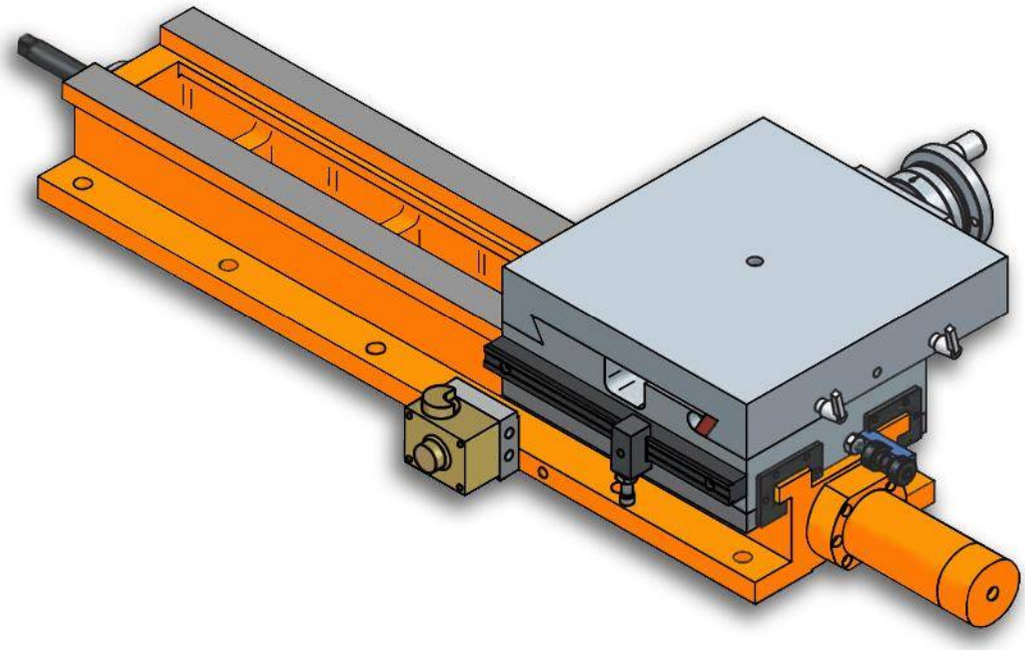

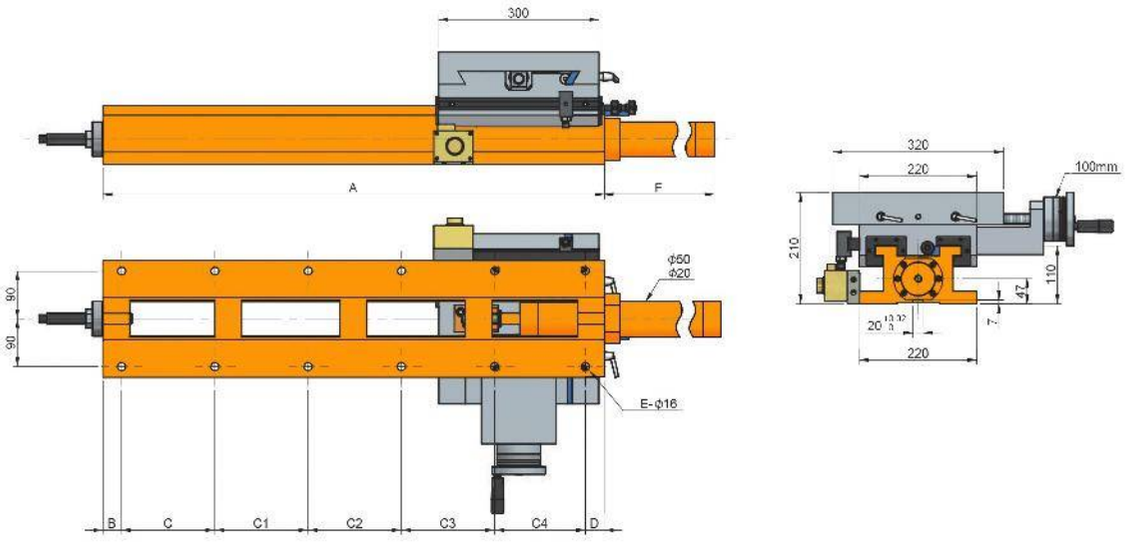
300
A
F
ϕ50
ϕ20
90
90
E-ϕ16
B
C
C1
C2
C3
C4
D
320
220
100mm
210
47
110
7
220

Characteristics & Dimensions

Model	CHS220-300/670
A	*670.00*
B	*35.00*
C	*140.00*
C1	*140.00*
C2	*140.00*
C3	*180.00*
C4	-
C5	-
D	*35.00*
E	*10.00*
F	*332.00*
Maximum Stroke In "X" Axis	*350.00*
Maximum Stroke In "Y" Axis	*100.00*
Sliding Table Dimensions	*300.00 x 320.00*
Device Total Weight	*137.00*

***** All dimensions are given in millimeters.*

CHS220-300/800

Mixed Crossed Sliding Table

(Hydraulic + Manual Movement)

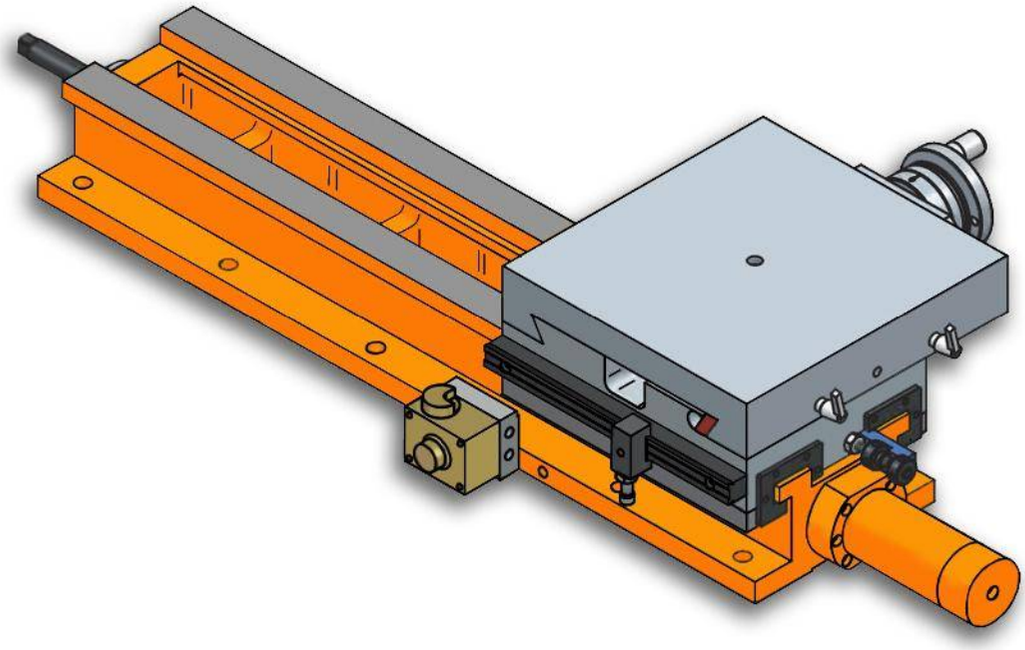

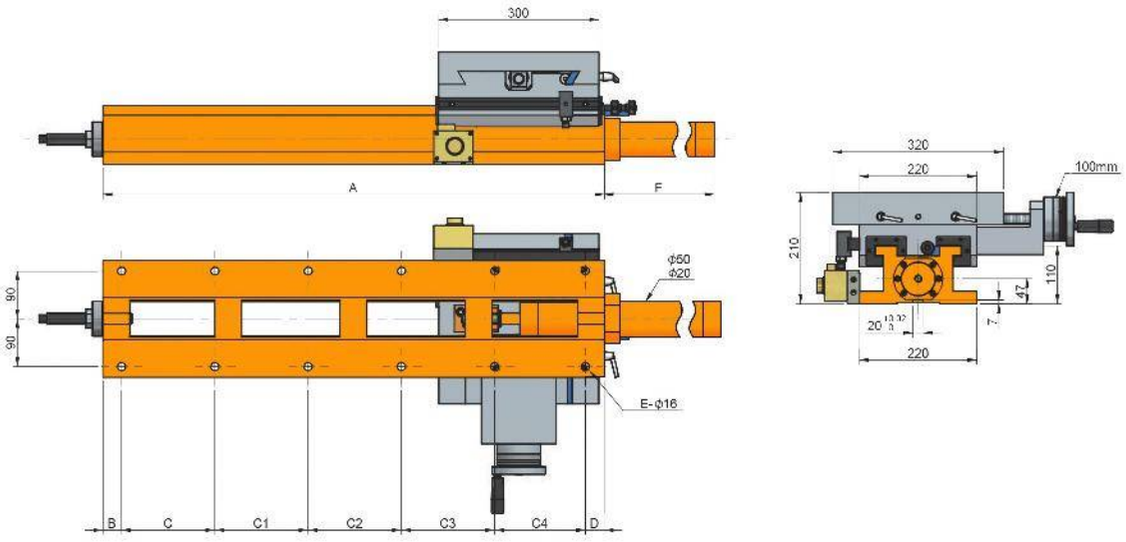
300
A
F
90
90
ϕ50
ϕ20
E-ϕ16
B
C
C1
C2
C3
C4
D
320
220
100mm
210
110
47
7
220

Características & Dimensiones

Modelo	CHS220-300/800
A	*800.00*
B	*35.00*
C	*140.00*
C1	*140.00*
C2	*140.00*
C3	*140.00*
C4	*170.00*
D	*35.00*
E	*12.00*
F	*462.00*
Carrera Máxima En *"X"*	*480.00*
Carrera Máxima En *"Y"*	*100.00*
Dimensiones De La Mesa Deslizable	*300.00 x 320.00*
Peso Total Del Dispositivo *(Kg)*	*147.00*

**** Redondez ≤ 0.005 mm.*
***** Todas las dimensiones están dadas en milímetros.*

CHS220-300/940

Mixed Crossed Sliding Table

(Hydraulic + Manual Movement)

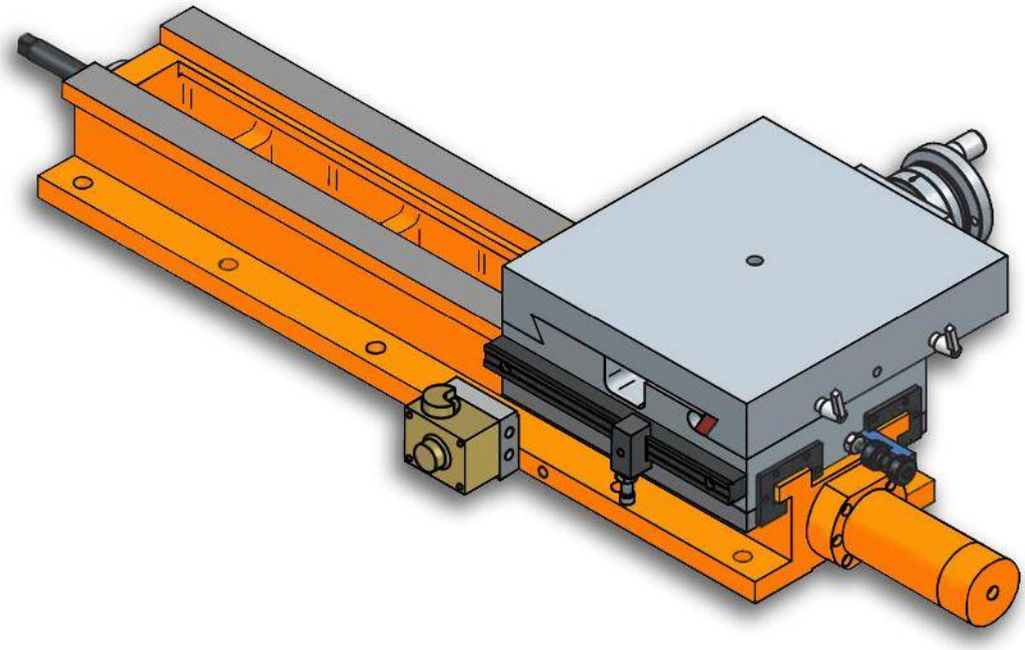

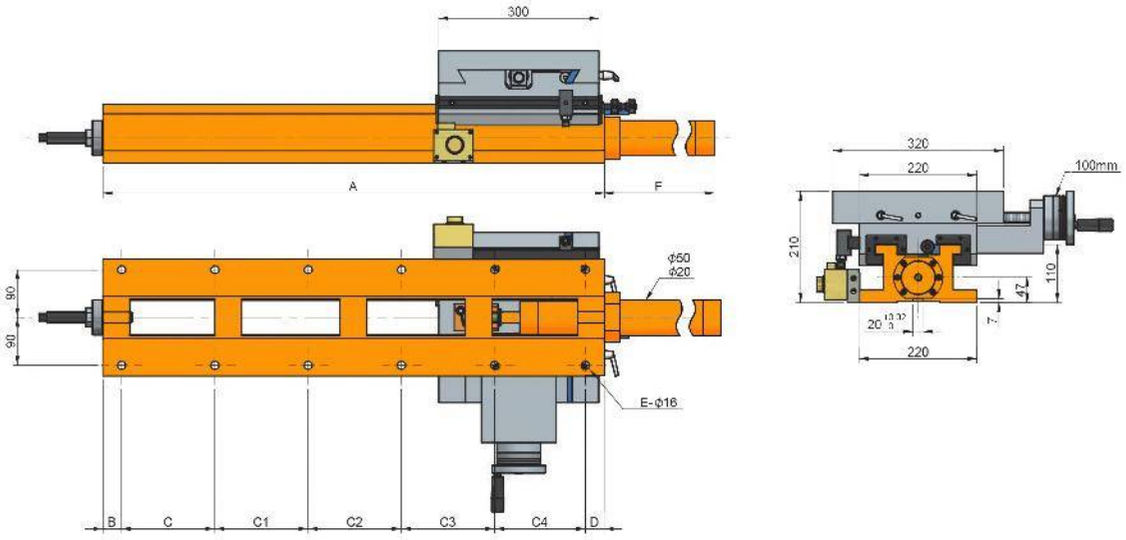
300
A
F
90
90
ϕ50
ϕ20
E-ϕ16
B
C
C1
C2
C3
C4
D
320
220
100mm
210
110
47
7
220

Characteristics & Dimensions

Model	CHS220-300/940
A	*940.00*
B	*35.00*
C	*175.00*
C1	*175.00*
C2	*175.00*
C3	*175.00*
C4	*170.00*
C5	-
D	*35.00*
E	*12.00*
F	*602.00*
Maximum Stroke In "X" Axis	*620.00*
Maximum Stroke In "Y" Axis	*100.00*
Sliding Table Dimensions	*300.00 x 320.00*
Device Total Weight	*157.00*

***** All dimensions are given in millimeters.*

CHS300-300/420

Mixed Crossed Sliding Table

(Hydraulic + Manual Movement)

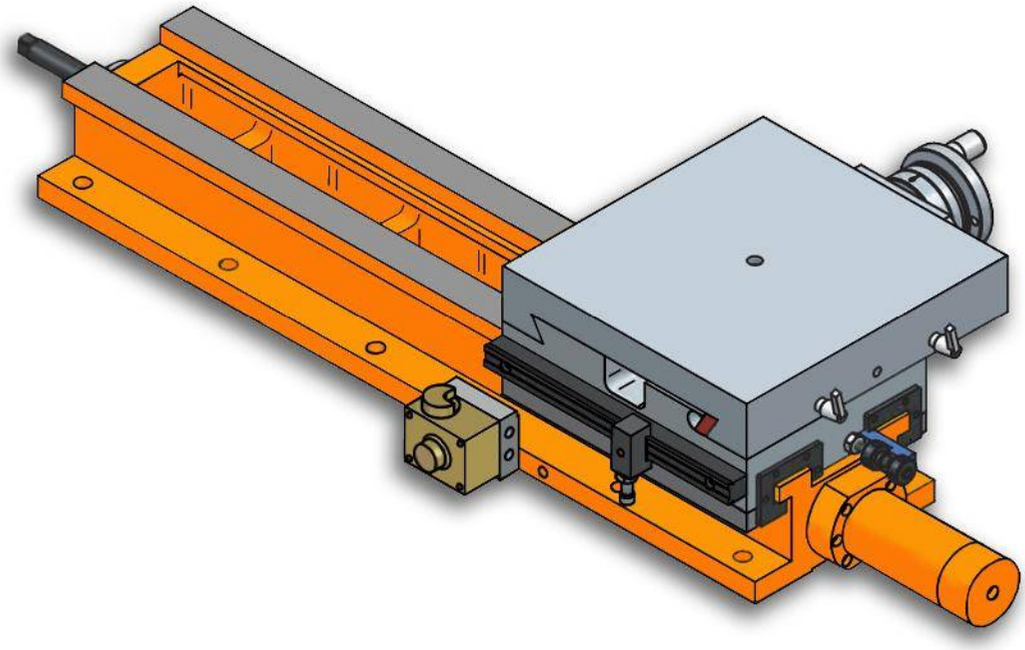

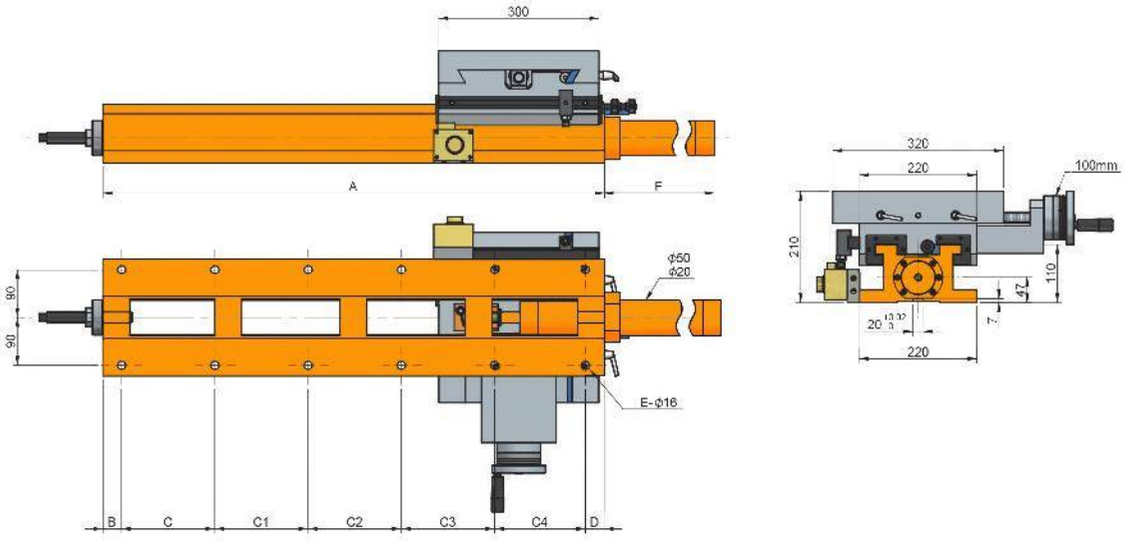
300
A
F
ϕ50
ϕ20
90
90
E-ϕ16
B
C
C1
C2
C3
C4
D
320
220
100mm
210
110
47
7
220

Characteristics & Dimensions

Model	CHS300-300/420
A	*420.00*
B	*35.00*
C	*150.00*
C1	*200.00*
C2	-
C3	-
C4	-
C5	-
D	*35.00*
E	*6.00*
F	*65.00*
Maximum Stroke In "X" Axis	*100.00*
Maximum Stroke In "Y" Axis	*100.00*
Sliding Table Dimensions	*300.00 x 320.00*
Device Total Weight	*160.00*

***** All dimensions are given in millimeters.*

CHS300-300/560

Mixed Crossed Sliding Table

(Hydraulic + Manual Movement)

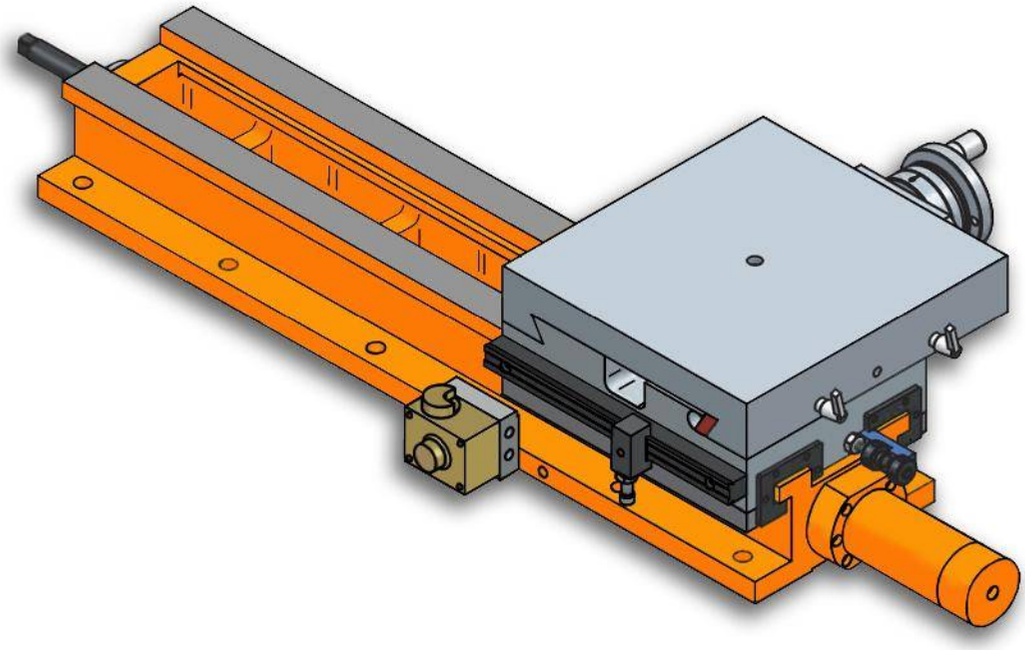

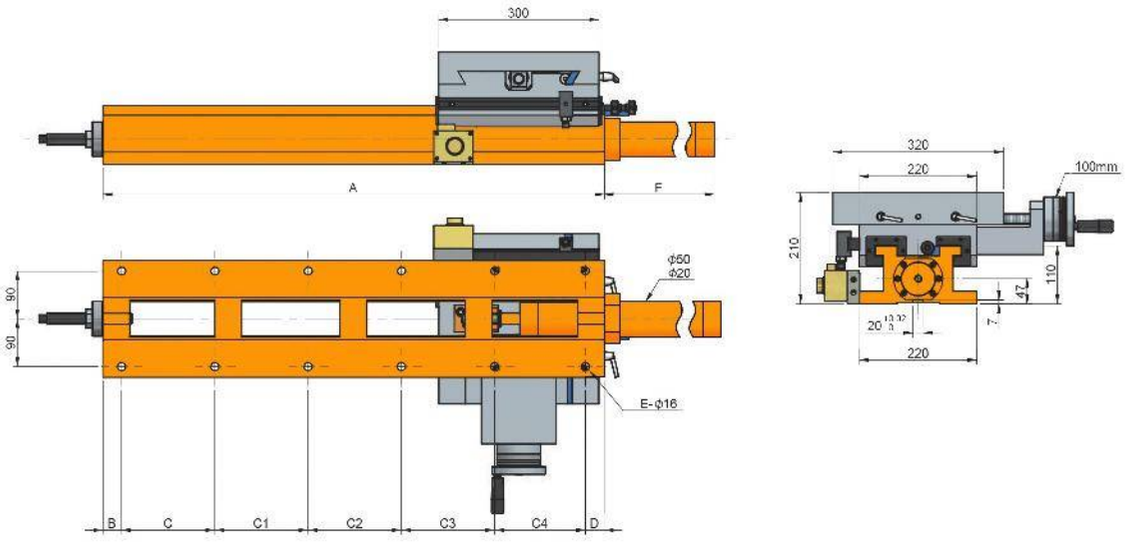
300
A
F
ϕ50
ϕ20
90
90
E-ϕ16
B
C
C1
C2
C3
C4
D
320
220
100mm
210
110
47
7
220

Characteristics & Dimensions

Model	CHS300-300/560
A	*560.00*
B	*35.00*
C	*165.00*
C1	*165.00*
C2	*165.00*
C3	-
C4	-
C5	-
D	*30.00*
E	*8.00*
F	*222.00*
Maximum Stroke In "X" Axis	*240.00*
Maximum Stroke In "Y" Axis	*100.00*
Sliding Table Dimensions	*300.00 x 320.00*
Device Total Weight	*170.00*

***** All dimensions are given in millimeters.*

CHS300-300/670

Mixed Crossed Sliding Table

(Hydraulic + Manual Movement)

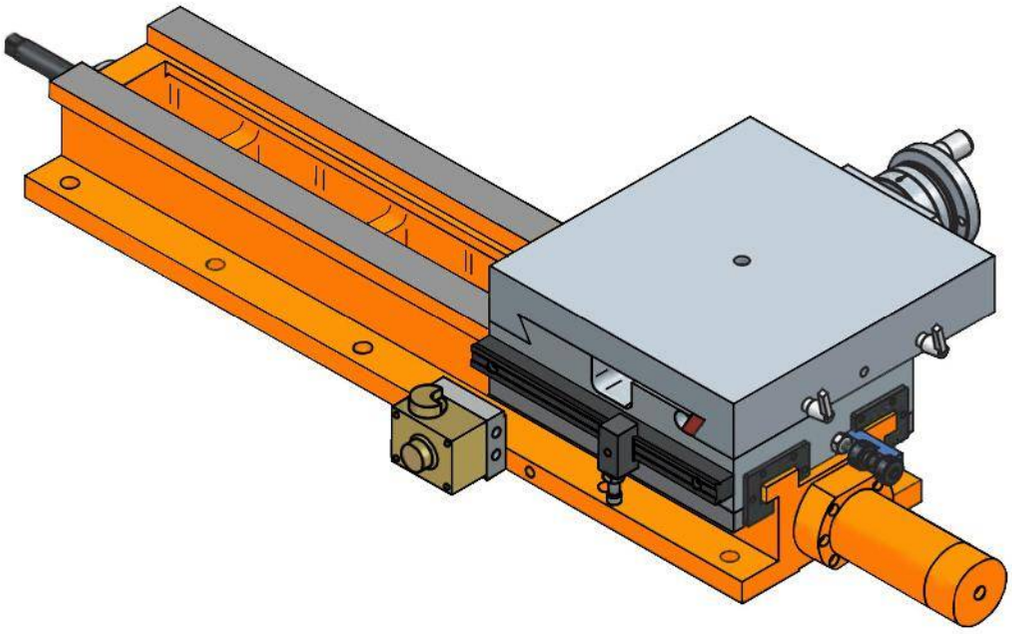

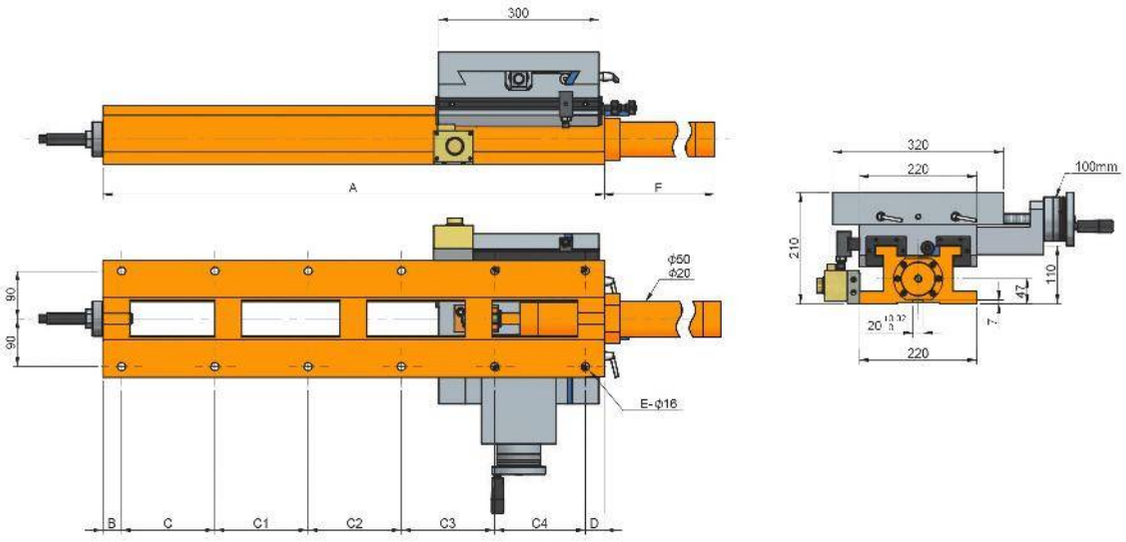
300
A
F
ϕ50
ϕ20
90
90
E-ϕ16
B
C
C1
C2
C3
C4
D
320
220
100mm
210
110
47
7
220

Characteristics & Dimensions

Model	CHS300-300/670
A	*670.00*
B	*35.00*
C	*140.00*
C1	*140.00*
C2	*140.00*
C3	*180.00*
C4	*-*
C5	*-*
D	*35.00*
E	*10.00*
F	*332.00*
Maximum Stroke In "X" Axis	*350.00*
Maximum Stroke In "Y" Axis	*100.00*
Sliding Table Dimensions	*300.00 x 320.00*
Device Total Weight	*190.00*

***** All dimensions are given in millimeters.*

CHS300-300/800

Mixed Crossed Sliding Table

(Hydraulic + Manual Movement)

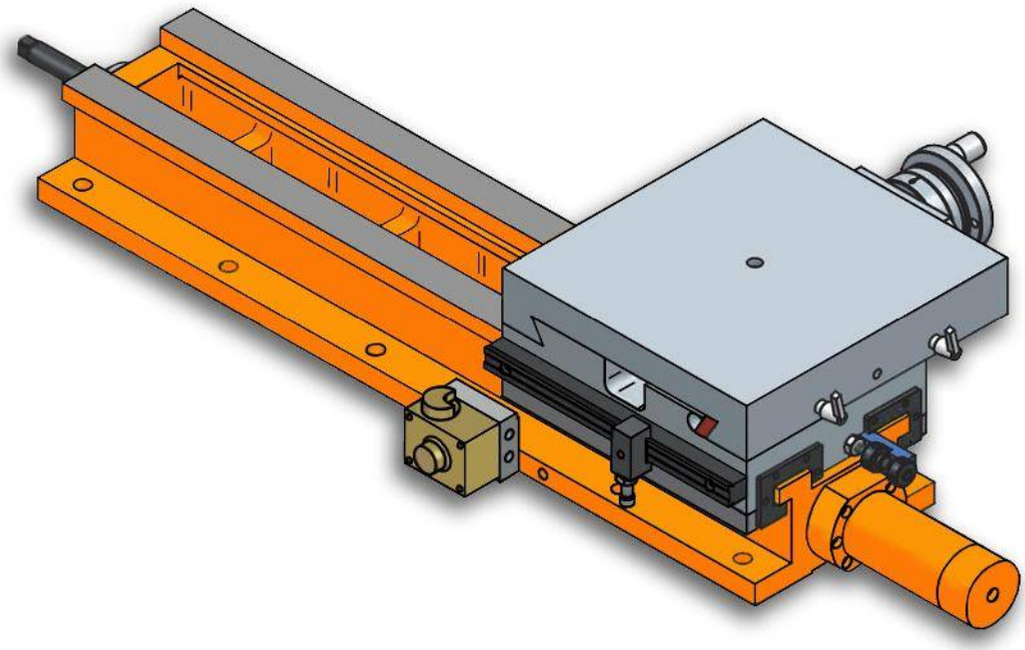

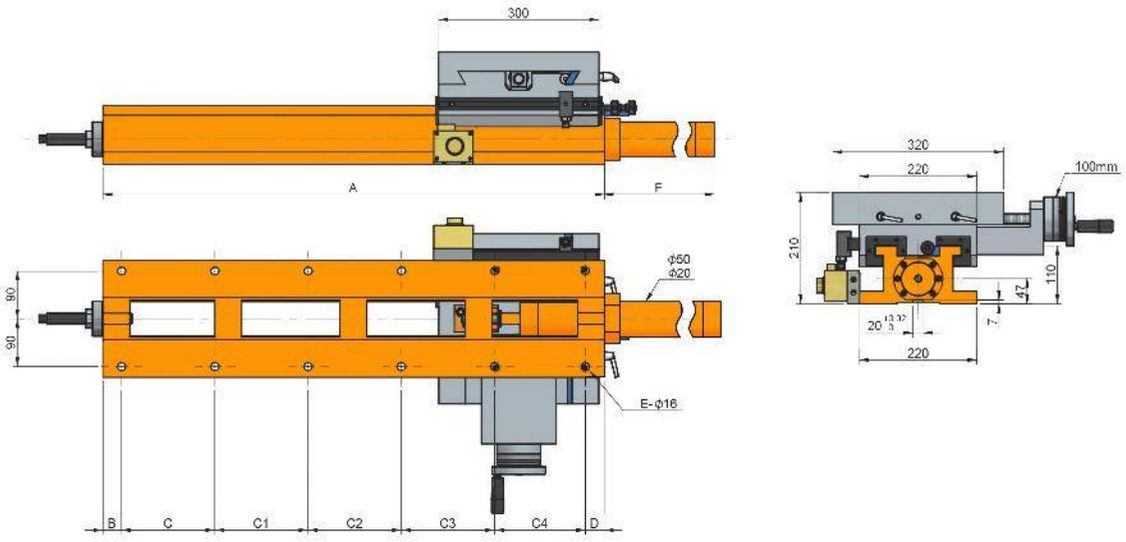
300
A
F
ϕ50
ϕ20
90
90
E-ϕ16
B
C
C1
C2
C3
C4
D
320
220
100mm
210
110
47
7
220

Characteristics & Dimensions

Model	CHS300-300/800
A	*800.00*
B	*35.00*
C	*140.00*
C1	*140.00*
C2	*140.00*
C3	*140.00*
C4	*170.00*
C5	*-*
D	*35.00*
E	*12.00*
F	*462.00*
Maximum Stroke In "X" Axis	*480.00*
Maximum Stroke In "Y" Axis	*100.00*
Sliding Table Dimensions	*300.00 x 320.00*
Device Total Weight	*240.00*

***** All dimensions are given in millimeters.*

CHS300-300/940

Mixed Crossed Sliding Table

(Hydraulic + Manual Movement)

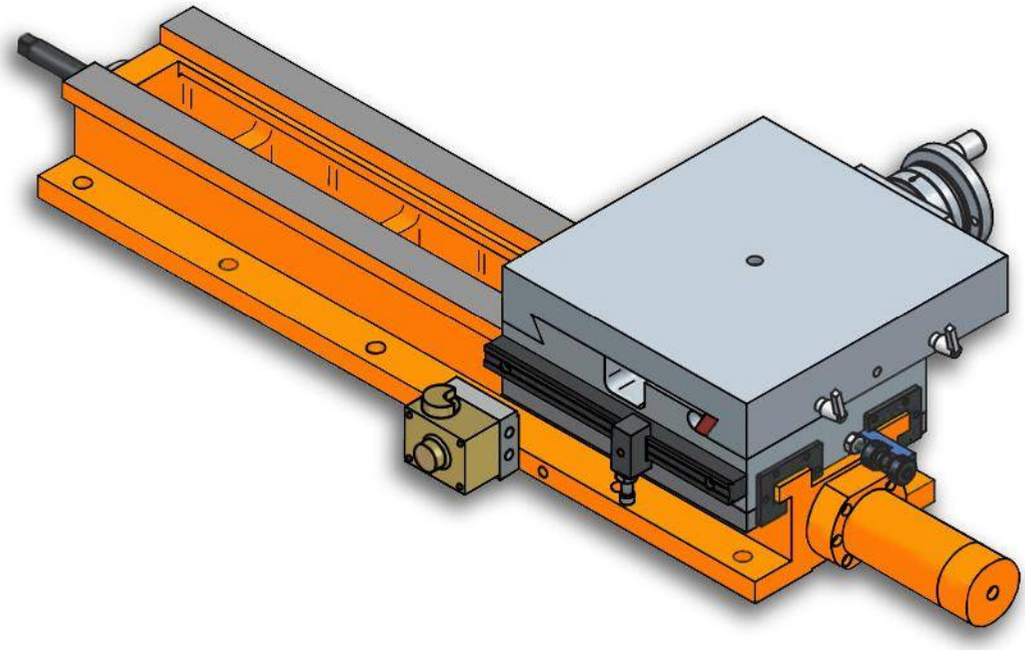

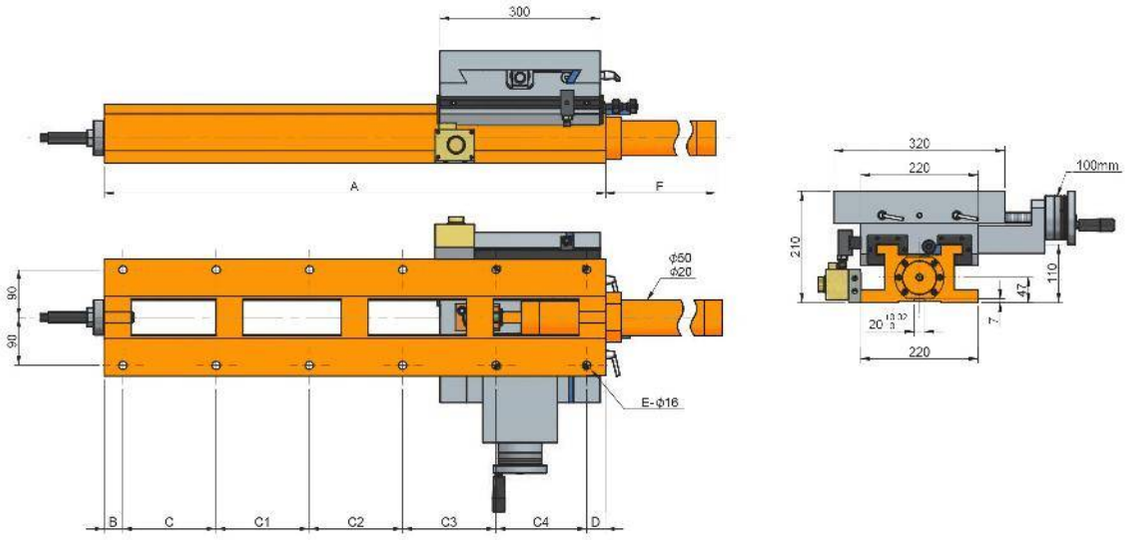
300
A
F
ϕ50
ϕ20
90
90
E-ϕ16
B
C
C1
C2
C3
C4
D
320
220
100mm
210
110
47
7
220

Characteristics & Dimensions

Model	CHS300-300/940
A	*940.00*
B	*35.00*
C	*175.00*
C1	*175.00*
C2	*175.00*
C3	*175.00*
C4	*175.00*
C5	*-*
D	*30.00*
E	*12.00*
F	*602.00*
Maximum Stroke In "X" Axis	*620.00*
Maximum Stroke In "Y" Axis	*100.00*
Sliding Table Dimensions	*300.00 x 320.00*
Device Total Weight	*257.00*

***** All dimensions are given in millimeters.*

CHS300-300/1200

Mixed Crossed Sliding Table

(Hydraulic + Manual Movement)

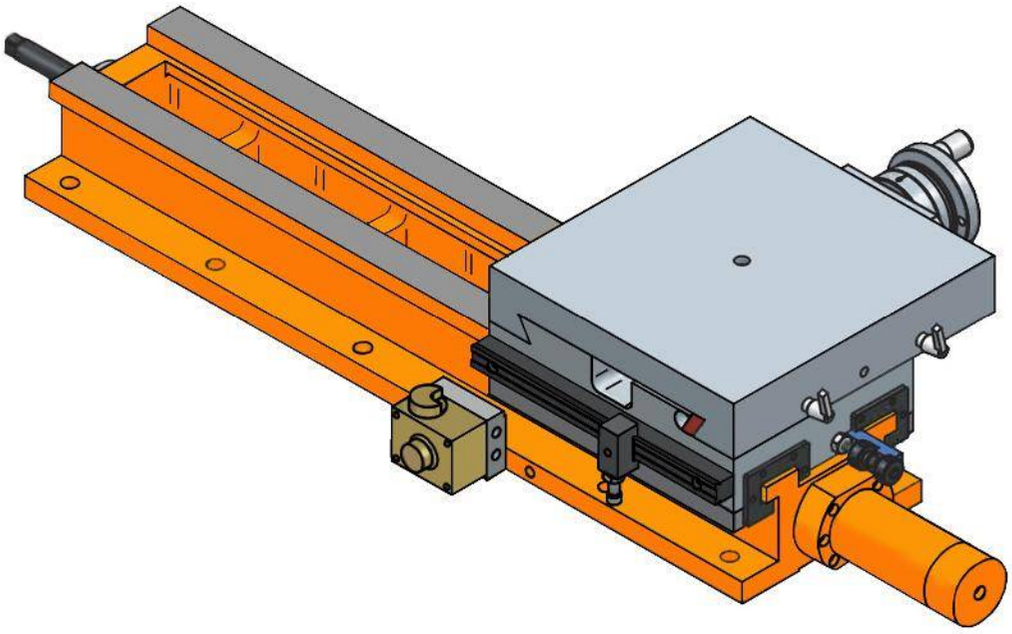

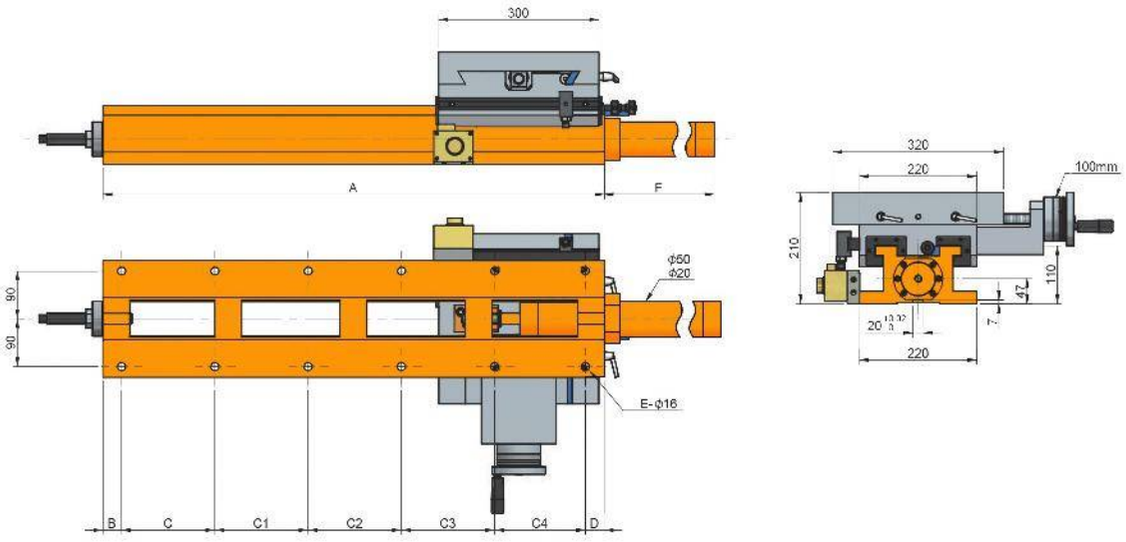
300
A
F
ϕ50
ϕ20
90
90
E-ϕ16
B
C
C1
C2
C3
C4
D
320
220
100mm
210
110
47
7
220

Characteristics & Dimensions

Model	CHS300-300/1200
A	*1200.00*
B	*30.00*
C	*190.00*
C1	*190.00*
C2	*190.00*
C3	*190.00*
C4	*190.00*
C5	*190.00*
D	*30.00*
E	*14.00*
F	*862.00*
Maximum Stroke In "X" Axis	*880.00*
Maximum Stroke In "Y" Axis	*100.00*
Sliding Table Dimensions	*300.00 x 320.00*
Device Total Weight	*292.00*

***** All dimensions are given in millimeters.*

CHS-H SERIES

REINFORCED MIXED CROSSED TABLES (HYDRAULIC + MANUAL)

CHS300-300/420H

Hi Performance Mixed Crossed Sliding Table

(Hydraulic + Manual Movement)

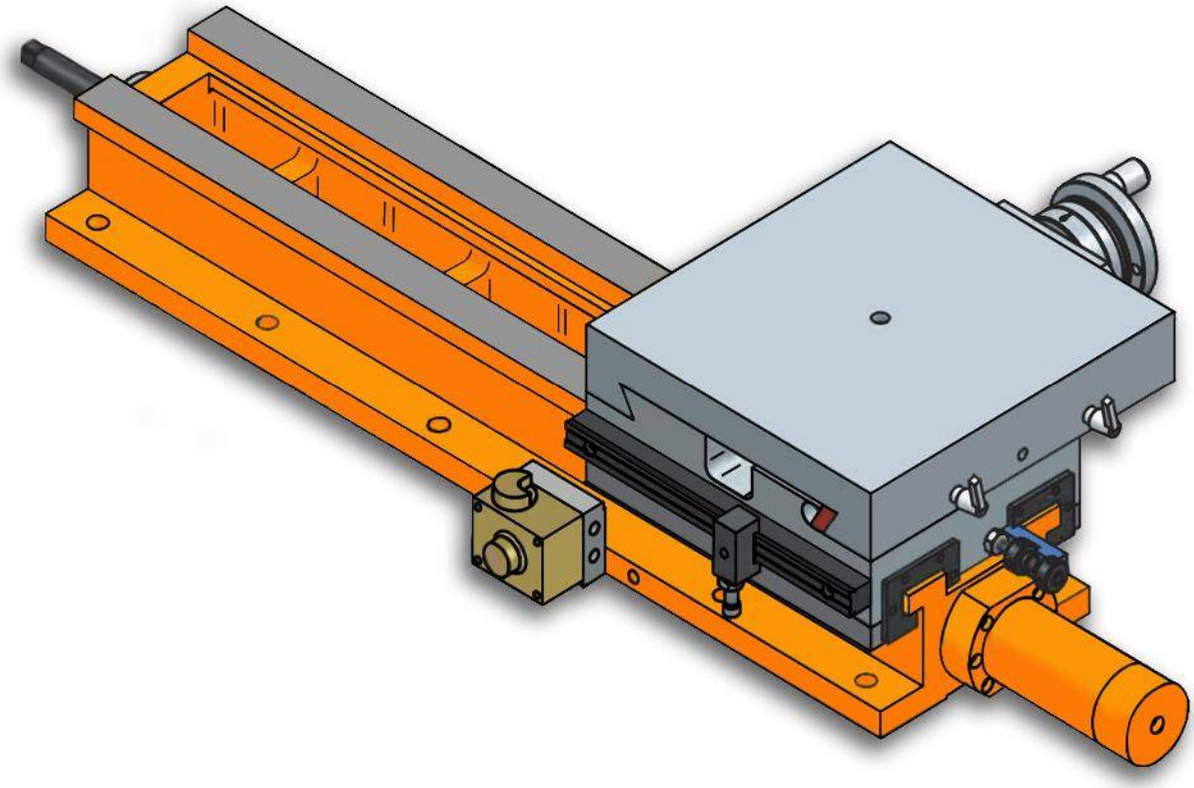

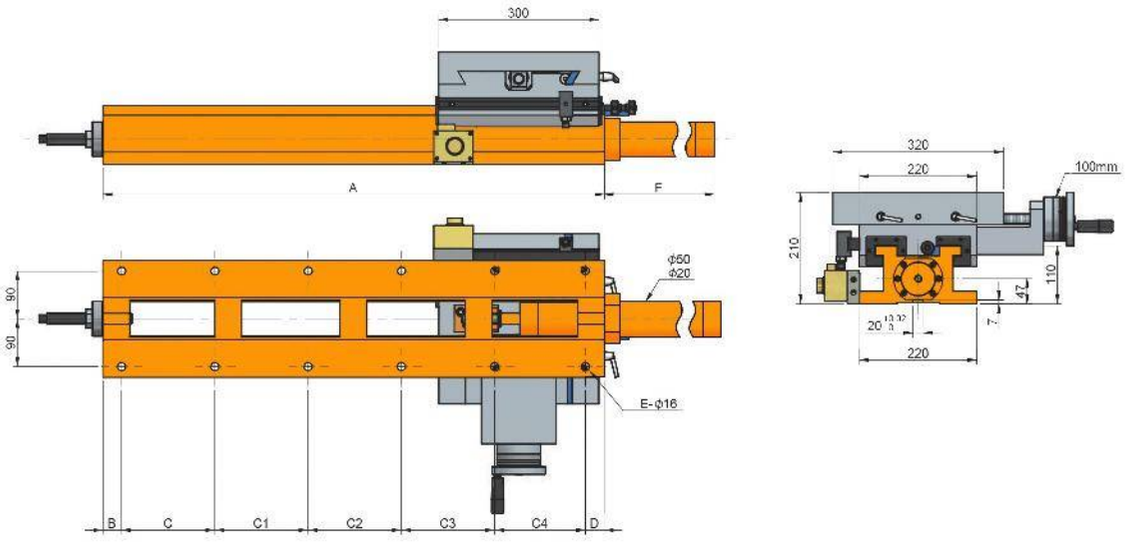
300
A
F
ϕ50
ϕ20
90
90
E-ϕ16
B
C
C1
C2
C3
C4
D
320
220
100mm
210
110
47
7
220

Characteristics & Dimensions

Model	CHS300-300/420H
A	*420.00*
B	*35.00*
C	*150.00*
C1	*200.00*
C2	-
C3	-
C4	-
C5	-
D	*35.00*
E	*6.00*
F	*75.00*
Maximum Stroke In "X" Axis	*100.00*
Maximum Stroke In "Y" Axis	*100.00*
Sliding Table Dimensions	*300.00 x 320.00*
Device Total Weight	*180.00*

***** All dimensions are given in millimeters.*

CHS300-300/560H

Hi Performance Mixed Crossed Sliding Table

(Hydraulic + Manual Movement)

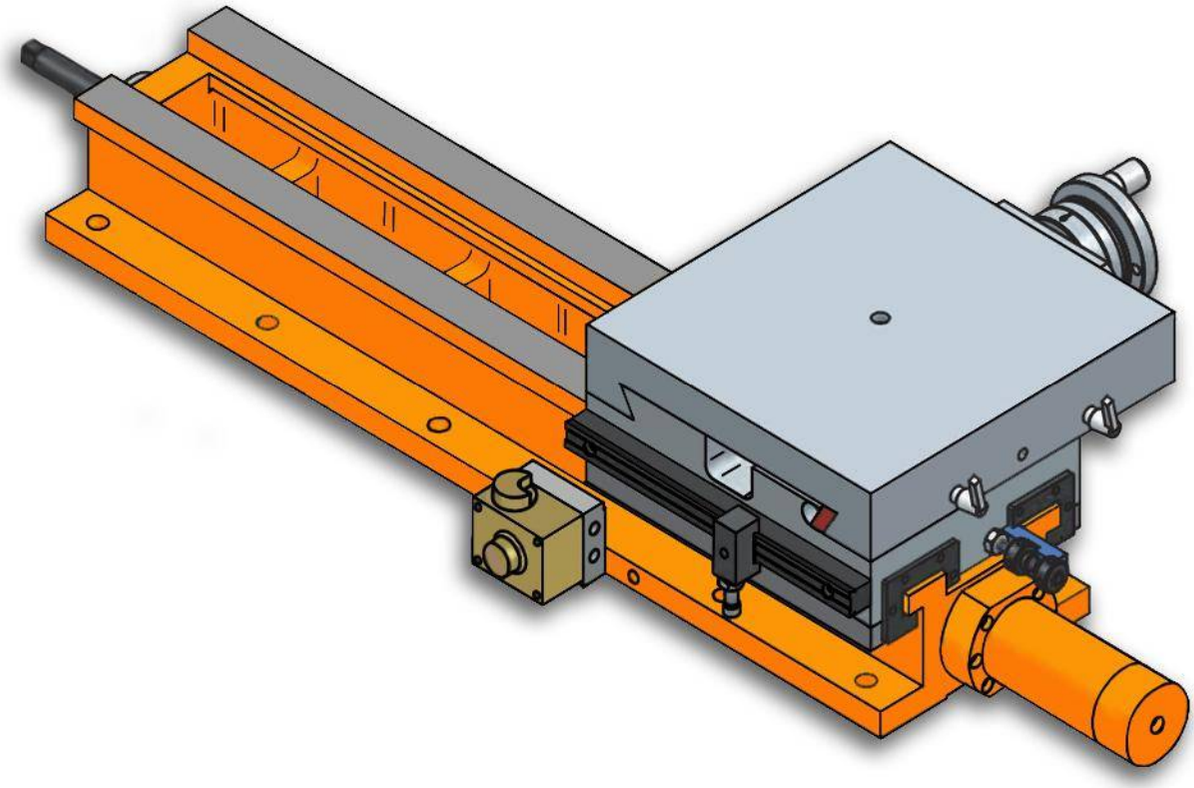

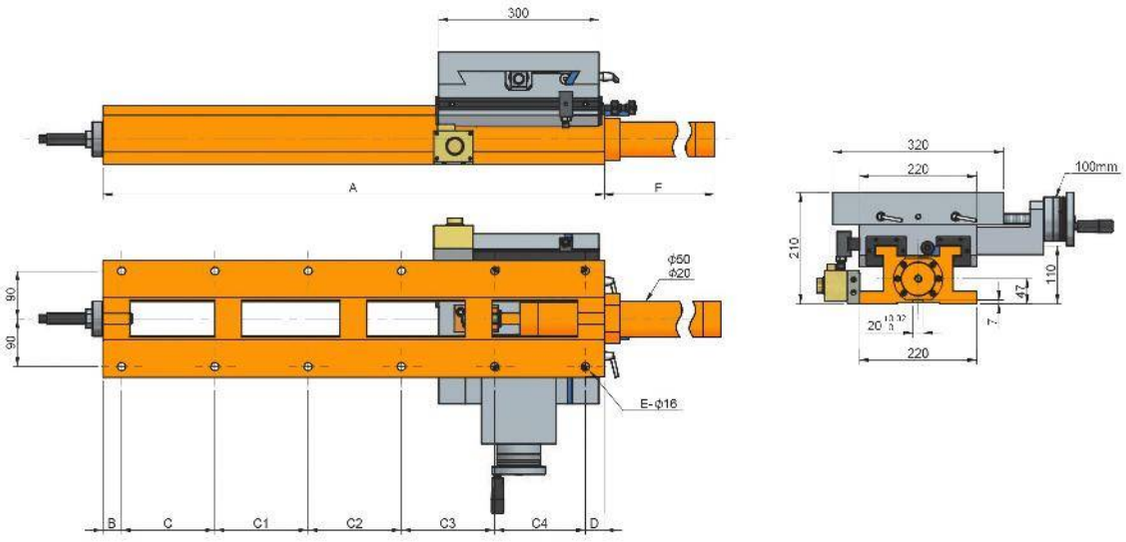
300
A
F
ϕ50
ϕ20
90
90
E-ϕ16
B
C
C1
C2
C3
C4
D
320
220
100mm
210
110
47
7
220

Characteristics & Dimensions

Model	CHS300-300/560H
A	*560.00*
B	*35.00*
C	*165.00*
C1	*165.00*
C2	*165.00*
C3	-
C4	-
C5	-
D	*30.00*
E	*8.00*
F	*224.00*
Maximum Stroke In "X" Axis	*240.00*
Maximum Stroke In "Y" Axis	*100.00*
Sliding Table Dimensions	*300.00 x 320.00*
Device Total Weight	*195.00*

***** All dimensions are given in millimeters.*

CHS300-300/670H

Hi Performance Mixed Crossed Sliding Table

(Hydraulic + Manual Movement)

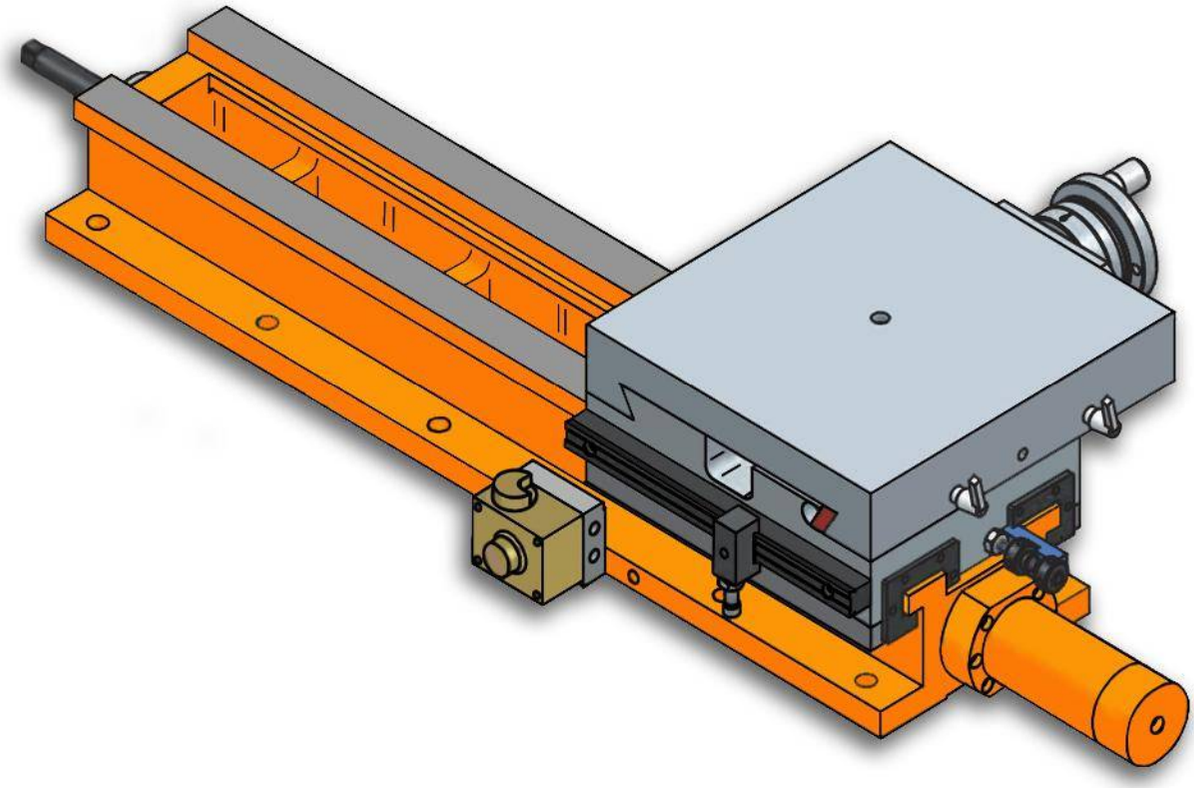

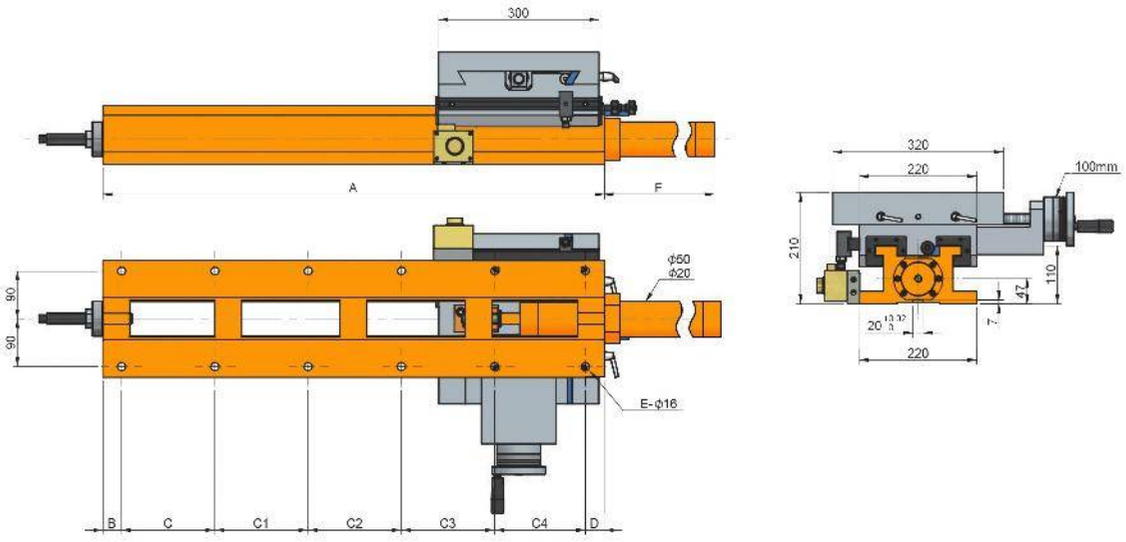
300
A
F
ϕ50
ϕ20
90
90
E-ϕ16
B
C
C1
C2
C3
C4
D
320
220
100mm
210
110
47
7
220

Characteristics & Dimensions

Model	CHS300-300/670H
A	*670.00*
B	*35.00*
C	*140.00*
C1	*140.00*
C2	*140.00*
C3	*180.00*
C4	-
C5	-
D	*35.00*
E	*10.00*
F	*335.00*
Maximum Stroke In "X" Axis	*350.00*
Maximum Stroke In "Y" Axis	*100.00*
Sliding Table Dimensions	*300.00 x 320.00*
Device Total Weight	*237.00*

***** All dimensions are given in millimeters.*

CHS300-300/800H

Hi Performance Mixed Crossed Sliding Table

(Hydraulic + Manual Movement)

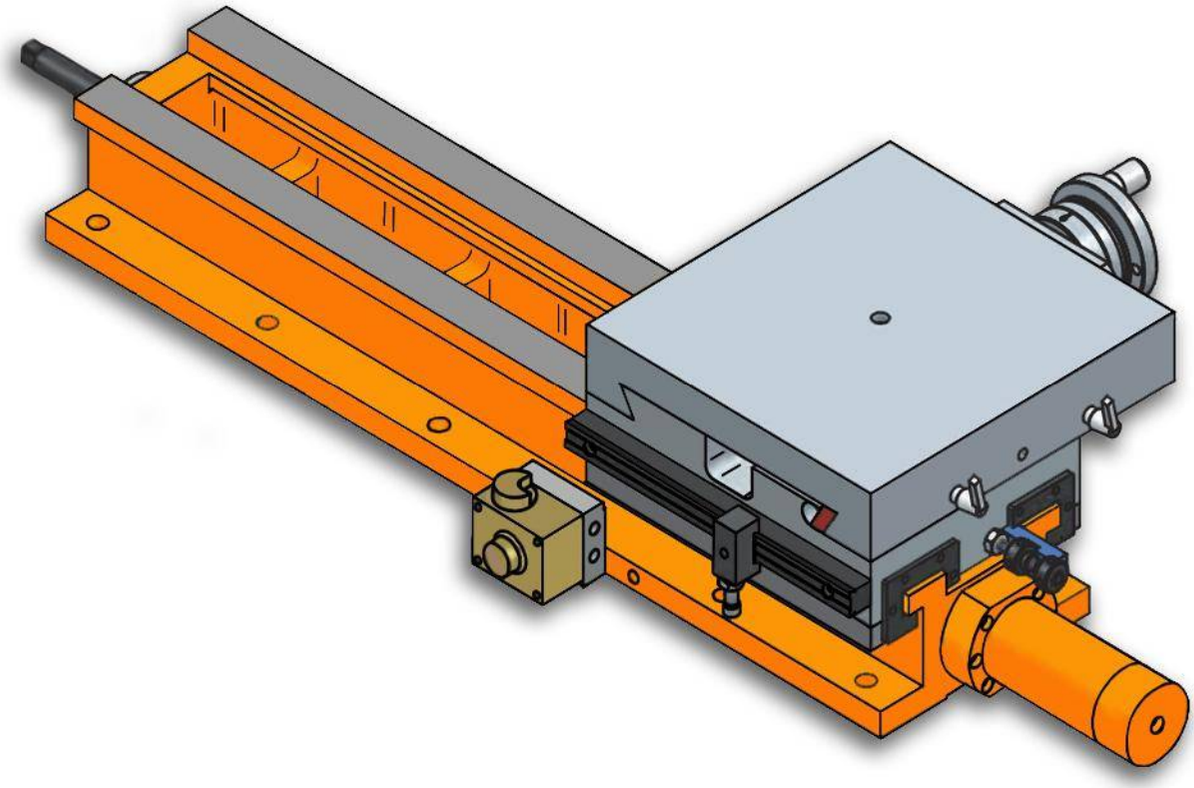

Characteristics & Dimensions

Model	CHS300-300/800H
A	*800.00*
B	*35.00*
C	*140.00*
C1	*140.00*
C2	*140.00*
C3	*140.00*
C4	*170.00*
C5	-
D	*35.00*
E	*12.00*
F	*465.00*
Maximum Stroke In "X" Axis	*480.00*
Maximum Stroke In "Y" Axis	*100.00*
Sliding Table Dimensions	*300.00 x 320.00*
Device Total Weight	*248.00*

***** All dimensions are given in millimeters.*

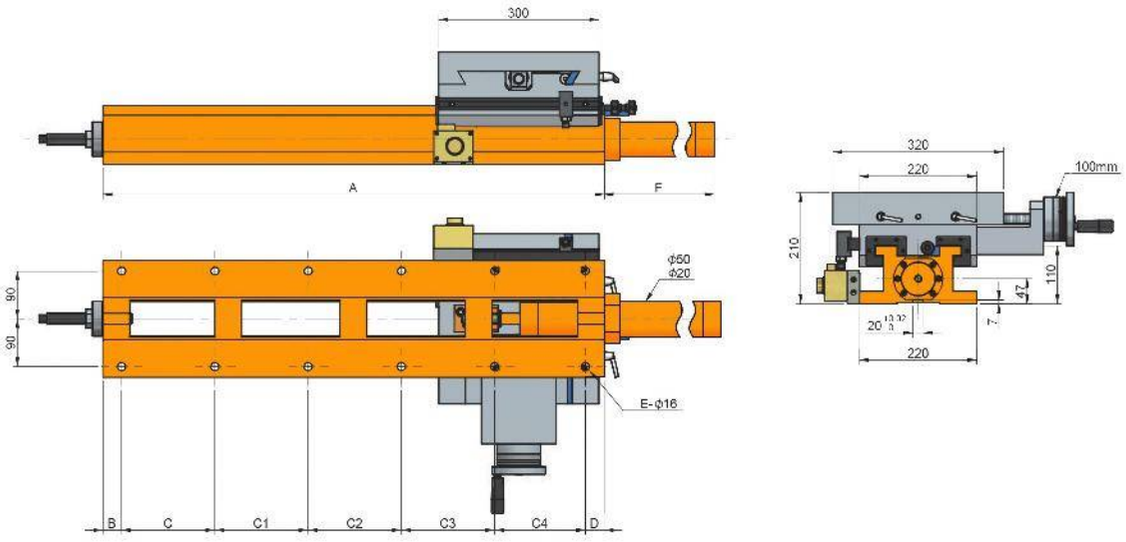
300
A
F
ϕ50
ϕ20
90
90
E-ϕ16
B
C
C1
C2
C3
C4
D
320
220
100mm
210
110
47
7
220

CHS300-300/940H

Hi Performance Mixed Crossed Sliding Table

(Hydraulic + Manual Movement)

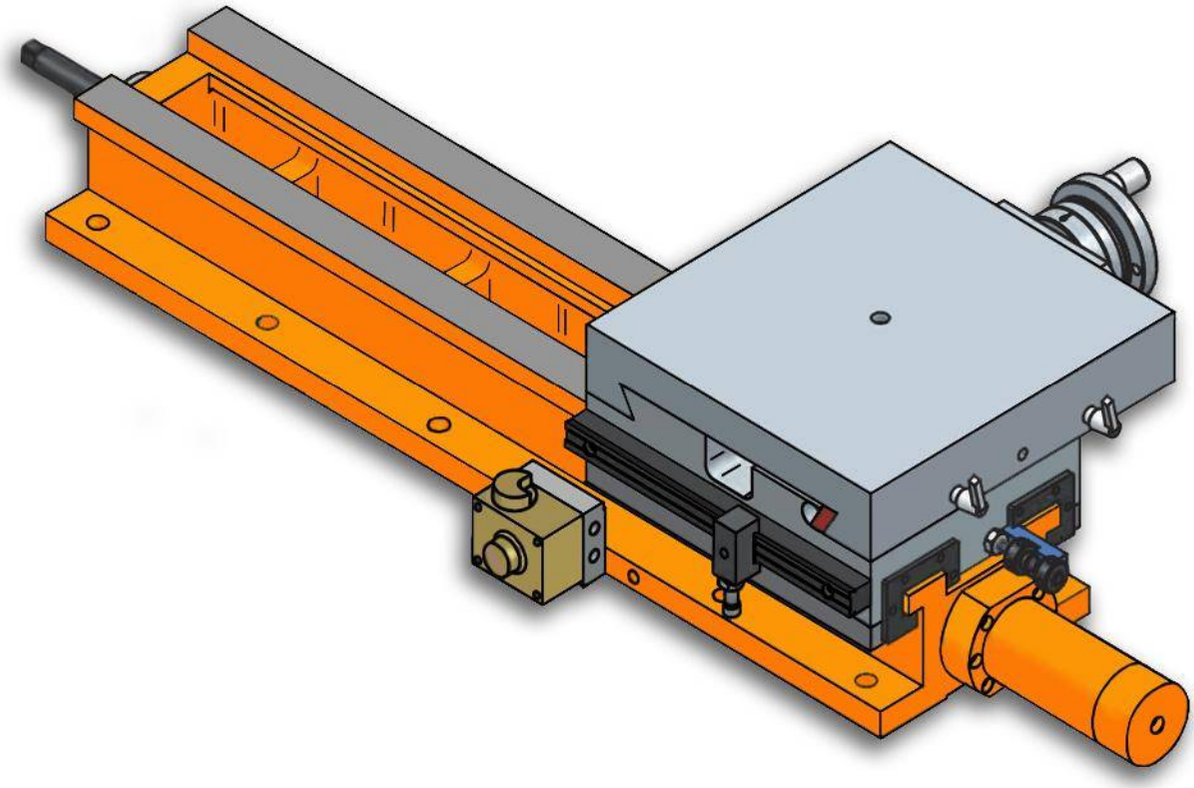

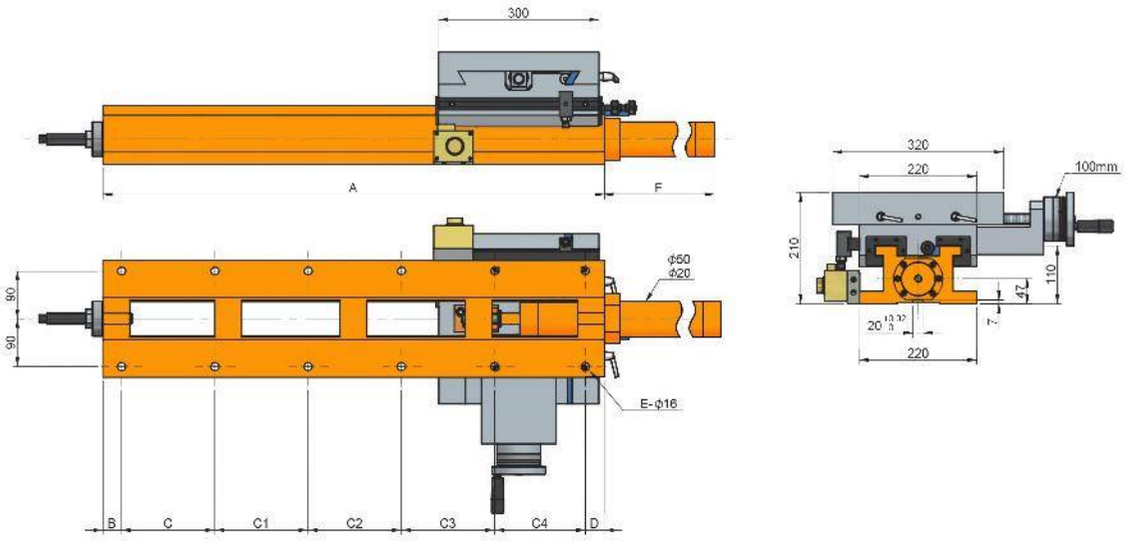
300
A
F
ϕ50
ϕ20
90
90
E-ϕ16
B
C
C1
C2
C3
C4
D
320
220
100mm
210
110
47
7
220

Characteristics & Dimensions

Model	CHS300-300/940H
A	*940.00*
B	*35.00*
C	*175.00*
C1	*175.00*
C2	*175.00*
C3	*175.00*
C4	*175.00*
C5	*-*
D	*30.00*
E	*12.00*
F	*608.00*
Maximum Stroke In "X" Axis	*620.00*
Maximum Stroke In "Y" Axis	*100.00*
Sliding Table Dimensions	*300.00 x 320.00*
Device Total Weight	*263.00*

***** All dimensions are given in millimeters.*

CHS300-300/1200H

Hi Performance Mixed Crossed Sliding Table

(Hydraulic + Manual Movement)

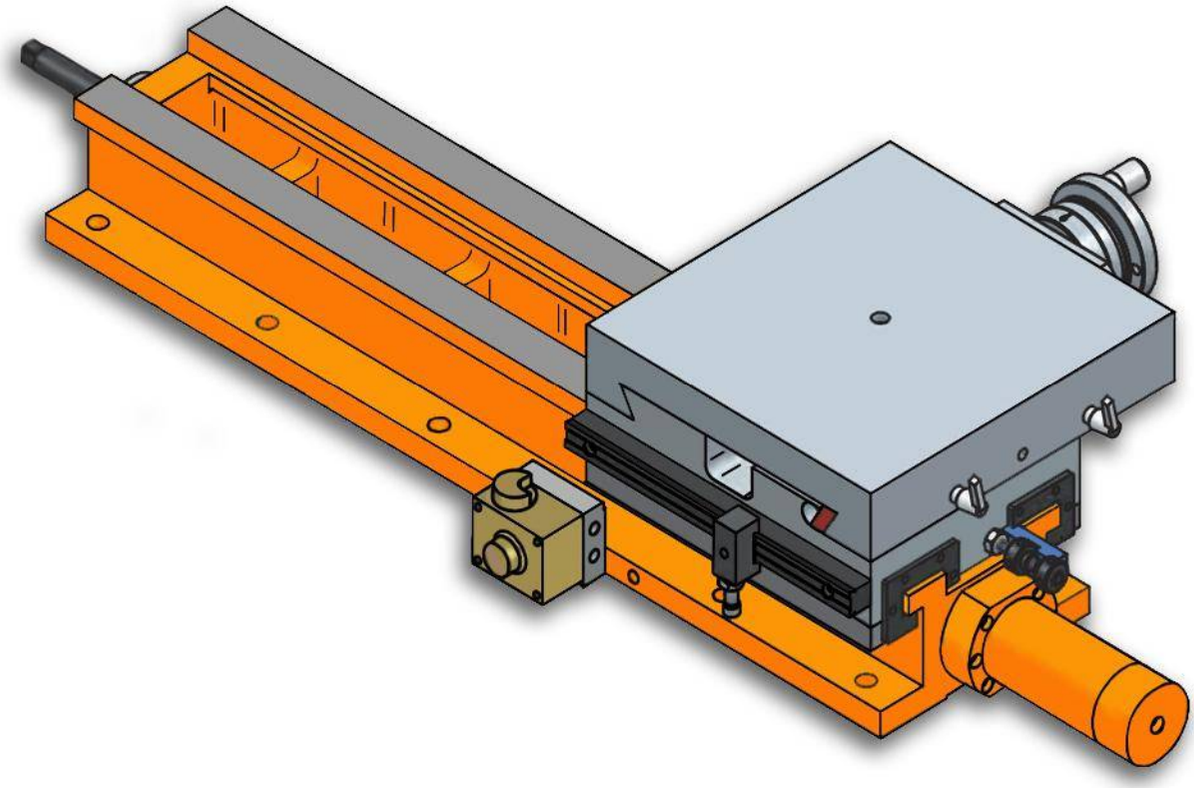

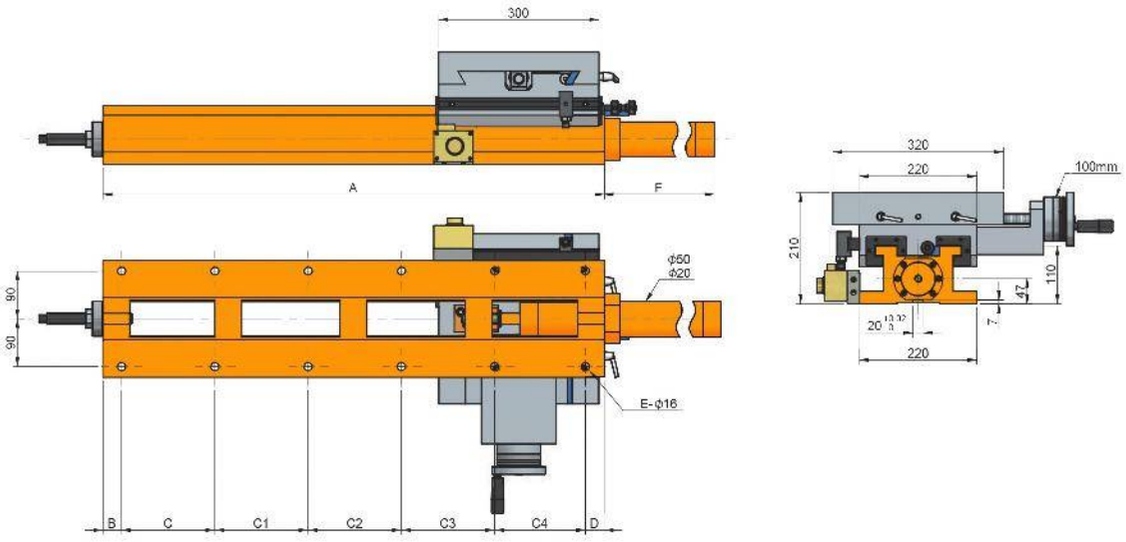
300
A
F
ϕ50
ϕ20
90
90
E-ϕ16
B
C
C1
C2
C3
C4
D
320
220
100mm
210
110
47
7
220

Characteristics & Dimensions

Model	CHS300-300/1200H
A	*1200.00*
B	*30.00*
C	*190.00*
C1	*190.00*
C2	*190.00*
C3	*190.00*
C4	*190.00*
C5	*190.00*
D	*30.00*
E	*14.00*
F	*868.00*
Maximum Stroke In "X" Axis	*880.00*
Maximum Stroke In "Y" Axis	*100.00*
Sliding Table Dimensions	*300.00 x 320.00*
Device Total Weight	*281.00*

***** All dimensions are given in millimeters.*

CK SERIES

PLATFORM WITH ADJUSTABLE HORIZONTAL HEIGHT

CK-200
Plataforma Con Altura Horizontal Ajustable



Características & Dimensiones

Modelo	CK-200
Capacidad De Carga Máxima *(kg)*	*150.00*
Carrera	*60.00*
Altura Máxima	*320.00*
Altura Mínima	*260.00*
Peso Del Dispositivo *(Kg)*	*64.00*

** Redondez: ≤ 0.003 mm.
*** Todas las dimensiones están dadas en milímetros.

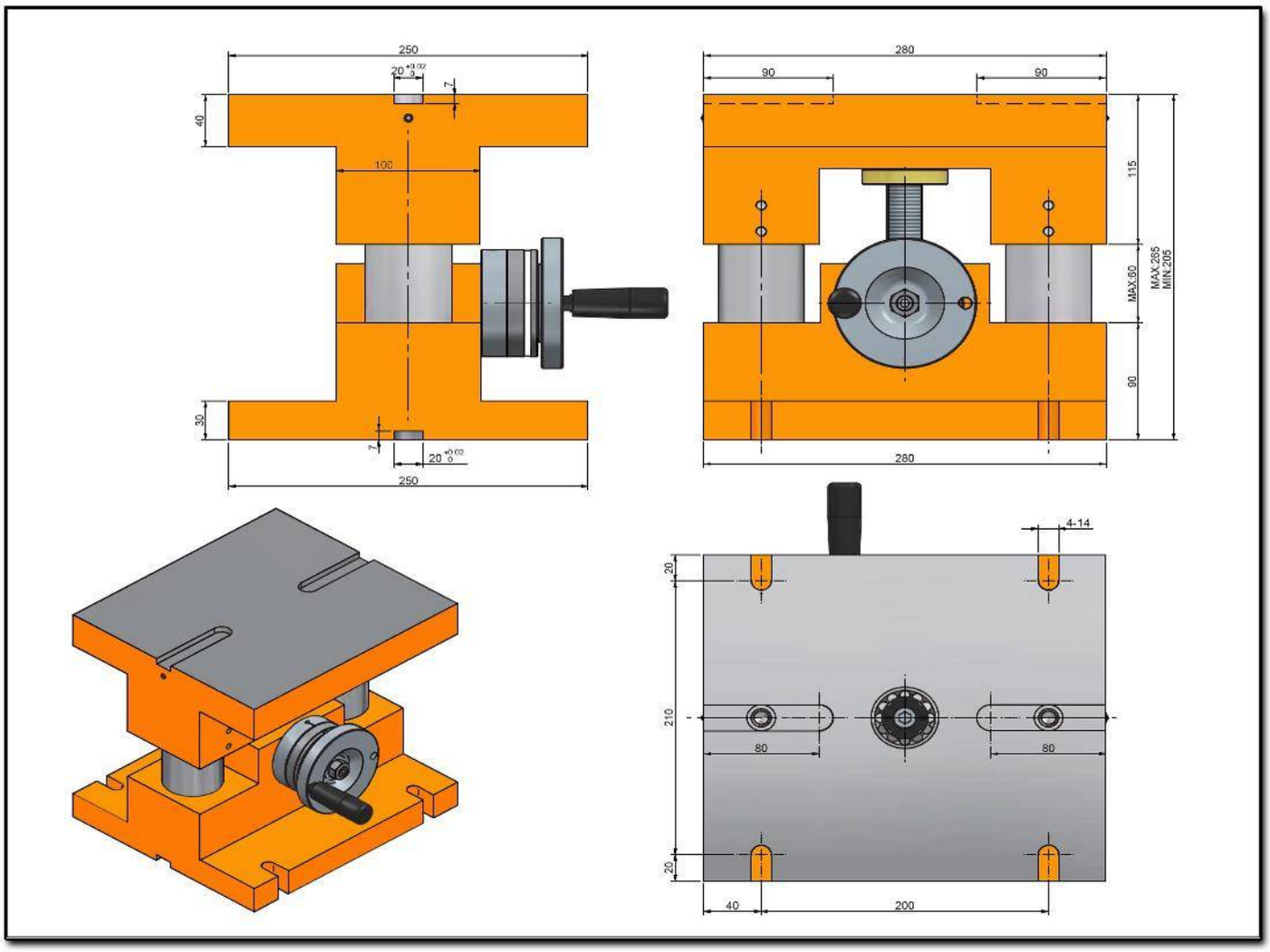
250
20
7
40
100
30
7
20
250
280
90
90
115
MAX:60
MAX:285
MIN:205
90
280
4-14
20
210
80
80
20
40
200

CST SERIES

MANUAL CROSSED SLIDING TABLES

CST-100

Manual Crossed Sliding Table

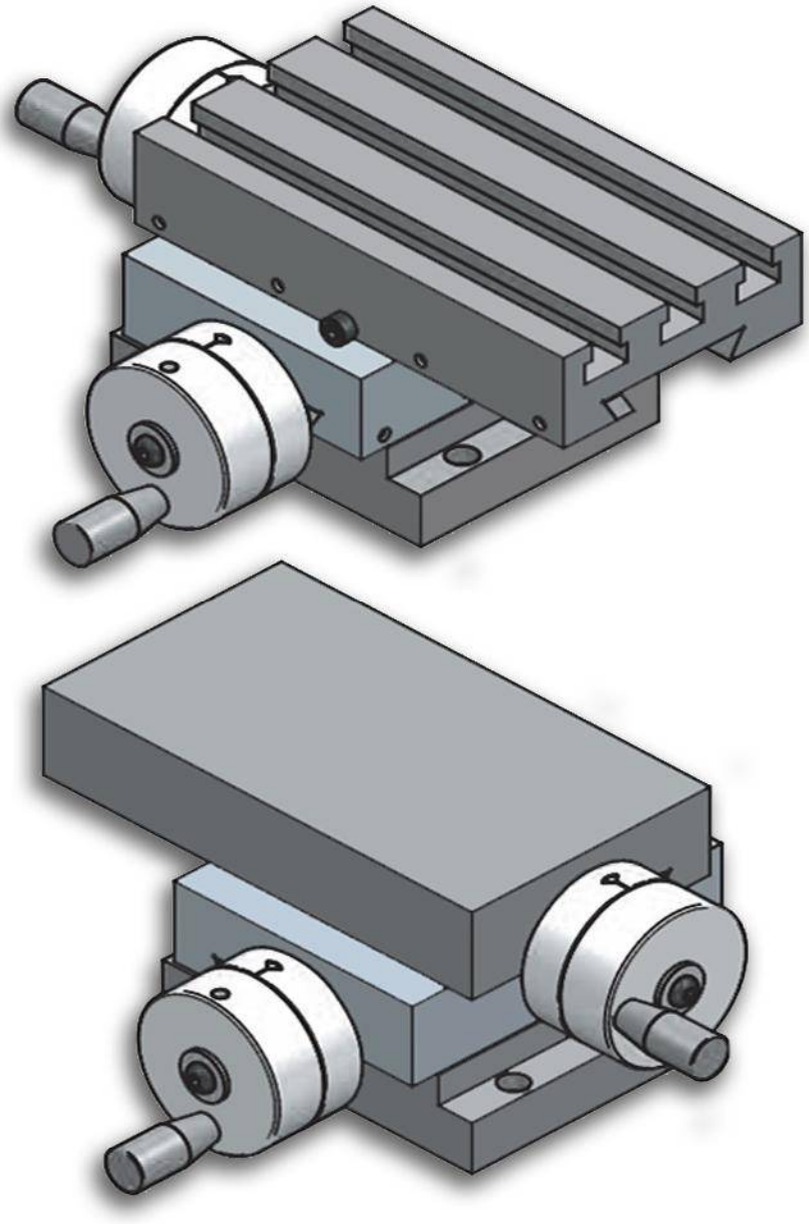

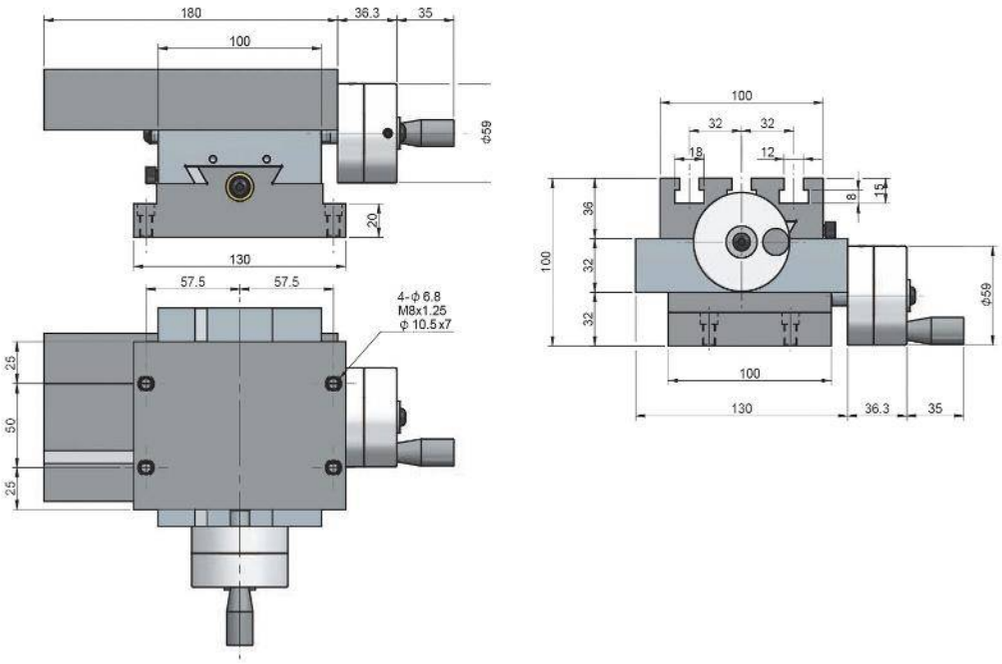

Characteristics & Dimensions

MODEL	CST-100
Upper Table Dimensions	*100.00 x 180.00*
Base Dimensions	*130.00 x 100.00*
"Y" Maximum Stroke	*80.00*
"X" Maximum Stroke	*50.00*
Dispositive Weight (Kg)	*13.50*

***** All dimensions are given in millimeters.*

CST-150

Manual Crossed Sliding Table

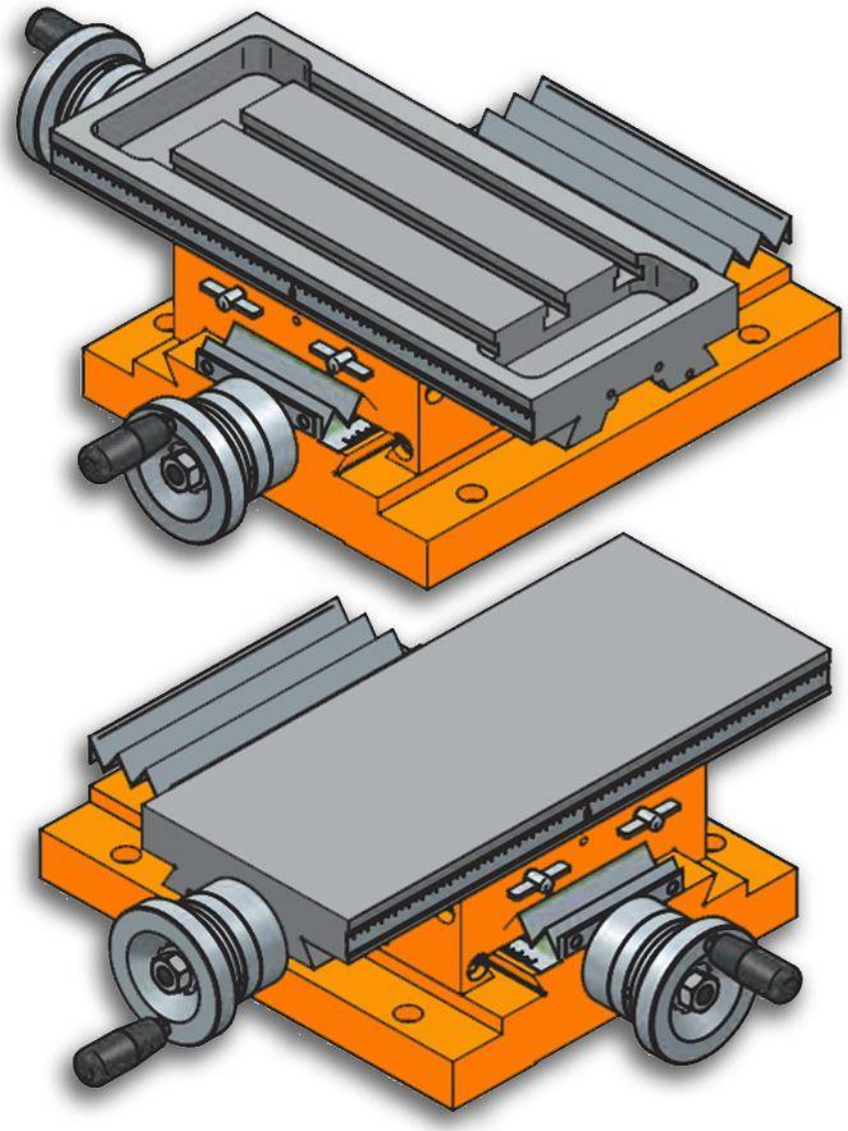

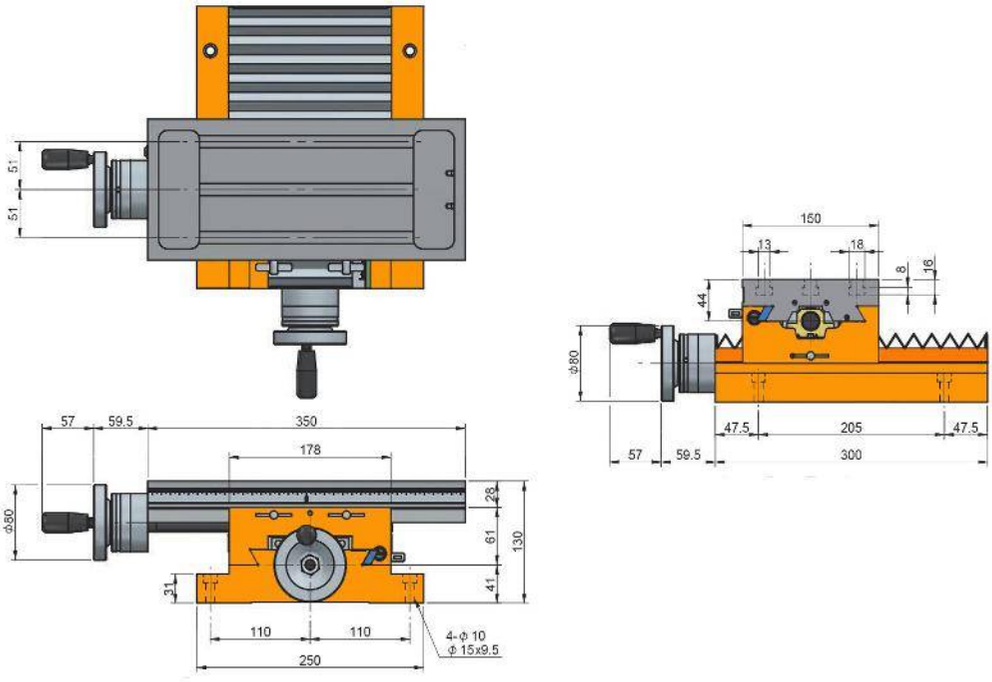

Characteristics & Dimensions

MODEL	CST-150
Upper Table Dimensions	*150.00 x 350.00*
Base Dimensions	*250.00 x 300.00*
"Y" Maximum Stroke	*170.00*
"X" Maximum Stroke	*120.00*
Dispositive Weight (Kg)	*37.50*

**** All dimensions are given in millimeters.*

CST150-200/230

Manual Crossed Sliding Table

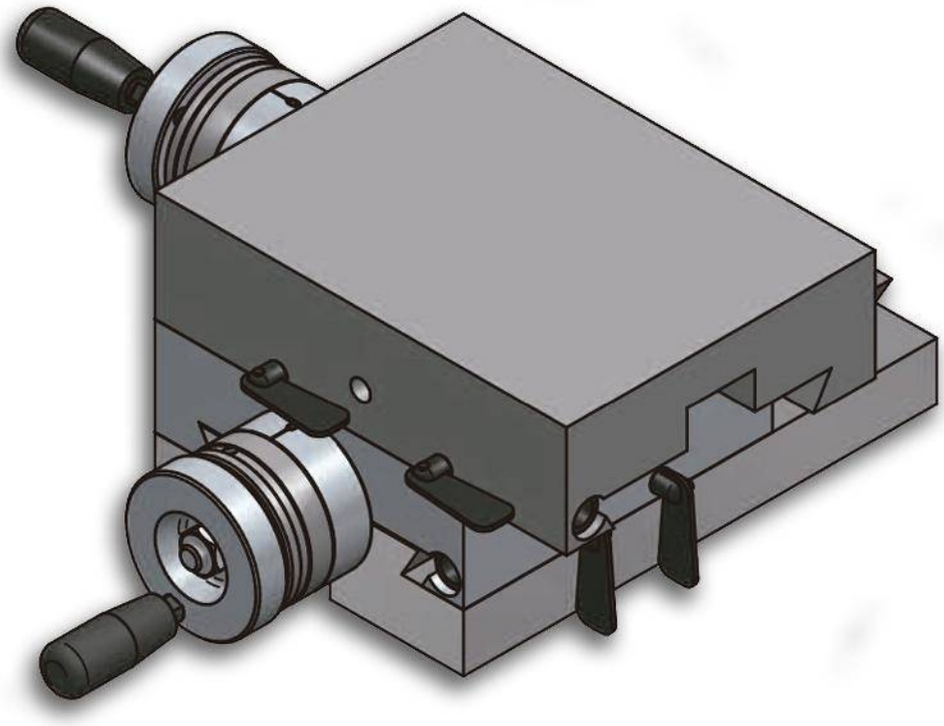

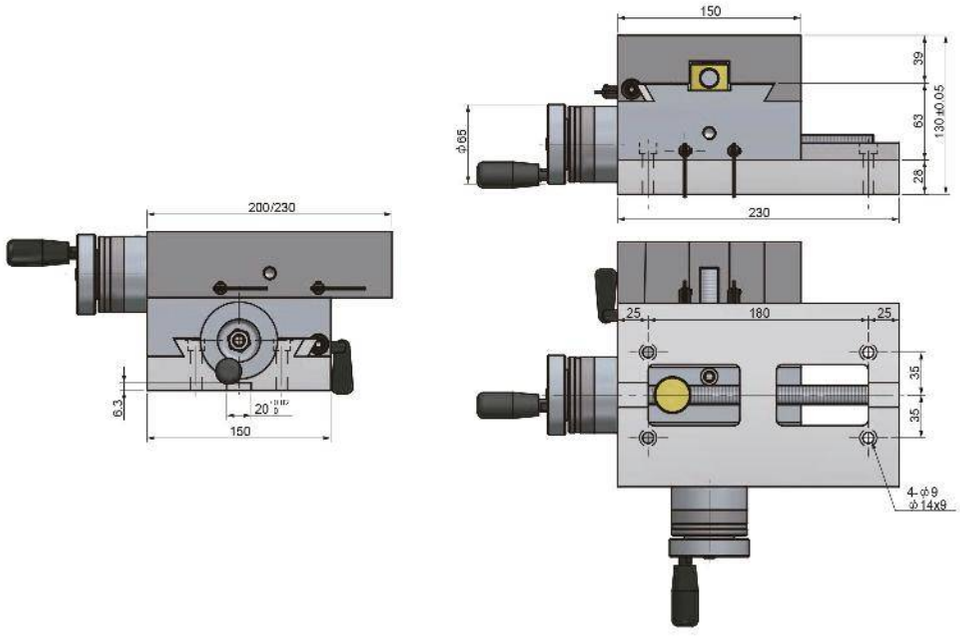

Characteristics & Dimensions

MODEL	CST-150-200/230
Upper Table Dimensions	*150.00 x 200.00*
Base Dimensions	*150.00 x 230.00*
"Y" Maximum Stroke	*50.00*
"X" Maximum Stroke	*80.00*
Dispositive Weight (Kg)	*26.00*

**** All dimensions are given in millimeters.

CST150-230/230

Manual Crossed Sliding Table

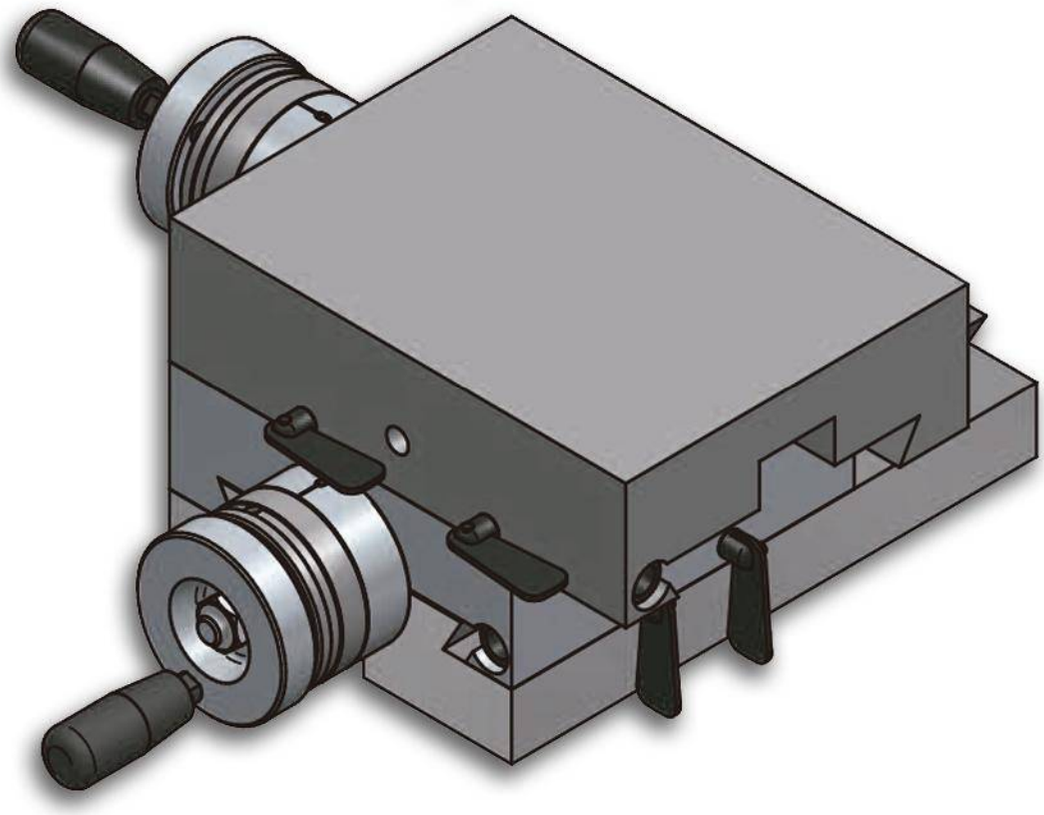

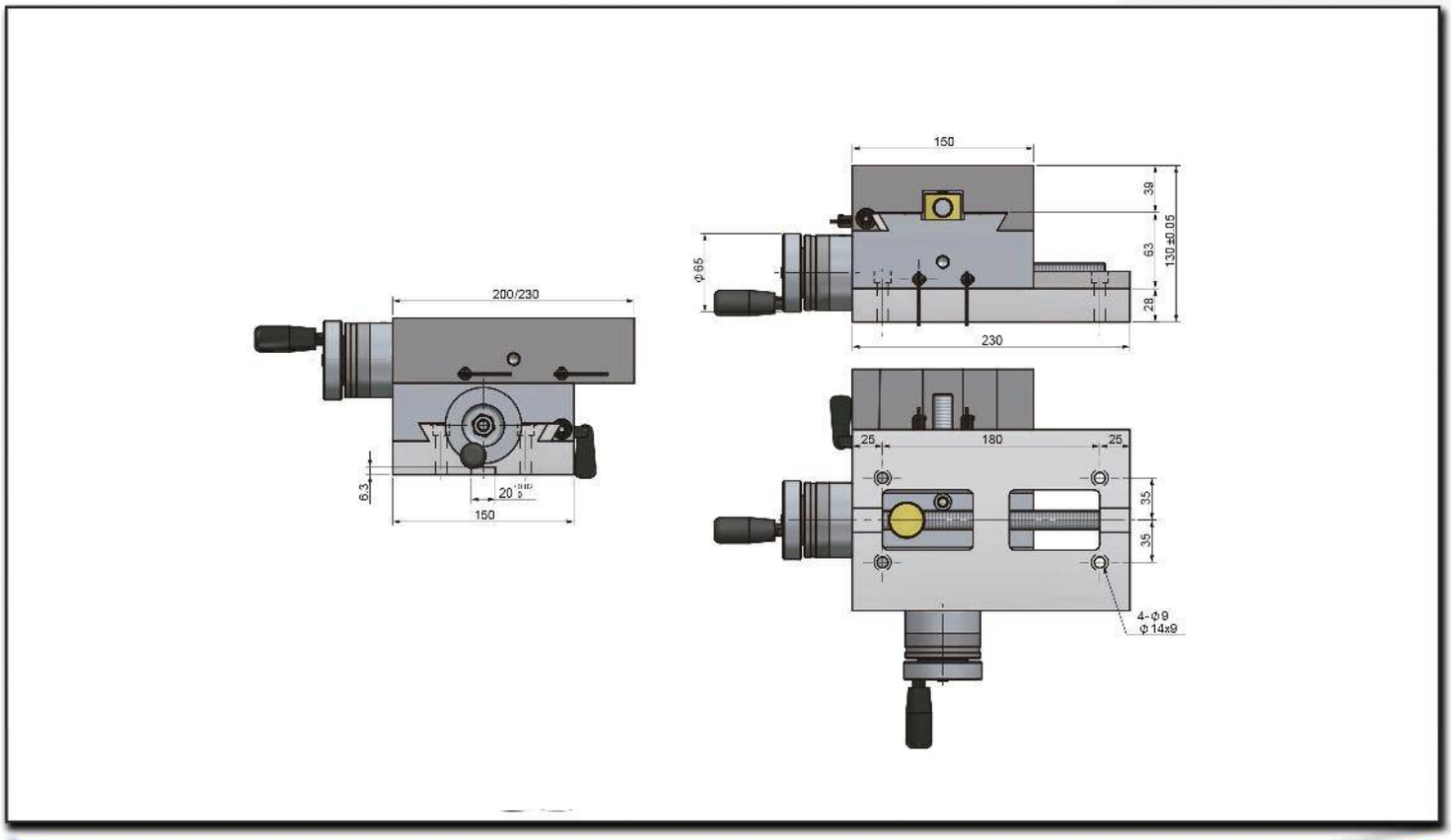

Characteristics & Dimensions

MODEL	CST-150-230-230
Upper Table Dimensions	*150.00 x 230.00*
Base Dimensions	*150.00 x 230.00*
"Y" Maximum Stroke	*80.00*
"X" Maximum Stroke	*80.00*
Dispositive Weight (Kg)	*28.00*

***** All dimensions are given in millimeters.*

CST-200

Manual Crossed Sliding Table

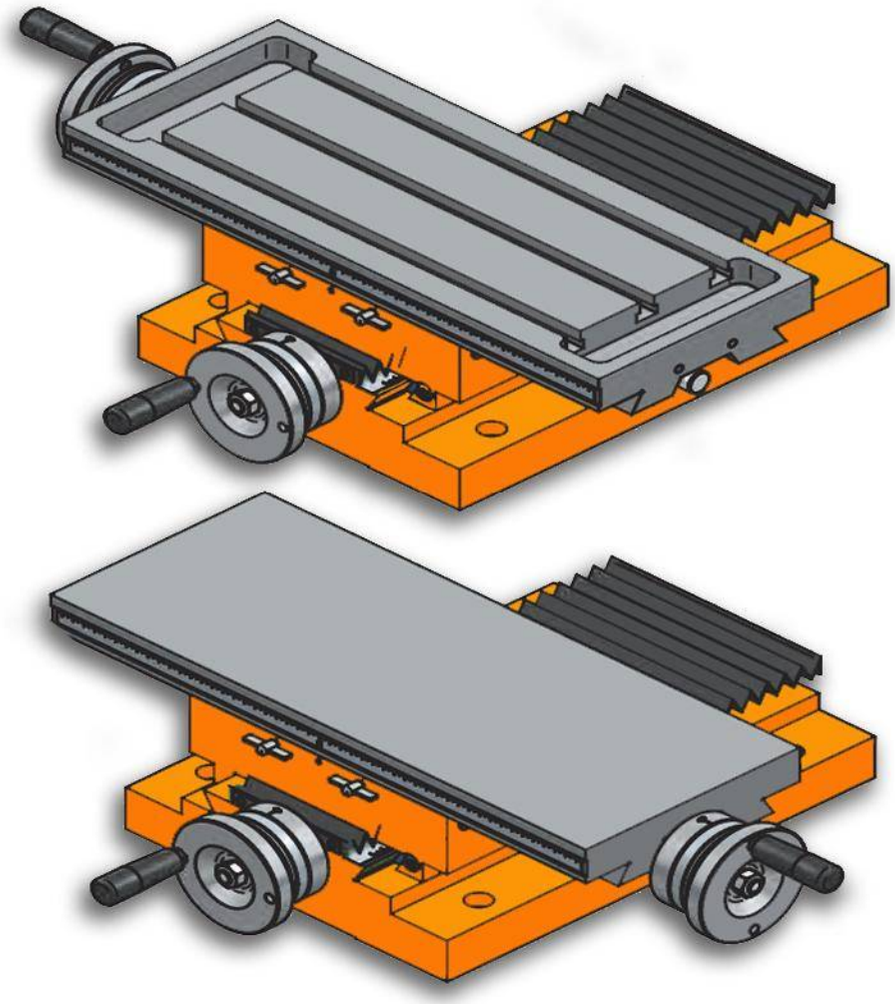

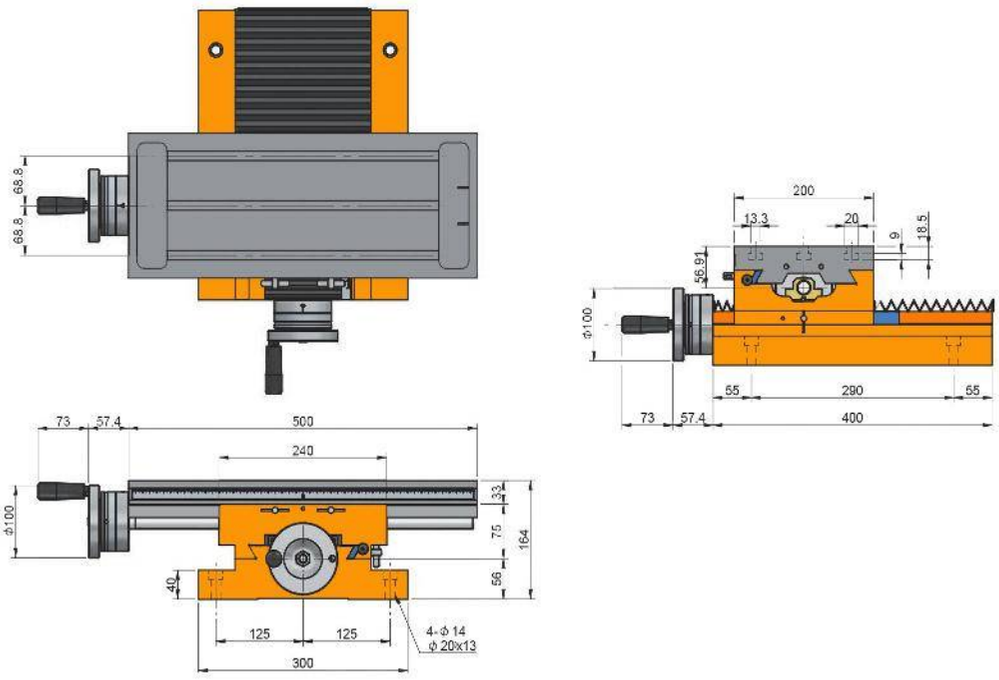

Characteristics & Dimensions

MODEL	CST-200
Upper Table Dimensions	*200.00 x 500.00*
Base Dimensions	*300.00 x 400.00*
"Y" Maximum Stroke	*260.00*
"X" Maximum Stroke	*170.00*
Dispositive Weight (Kg)	*73.00*

**** All dimensions are given in millimeters.*

CST-250

Manual Crossed Sliding Table

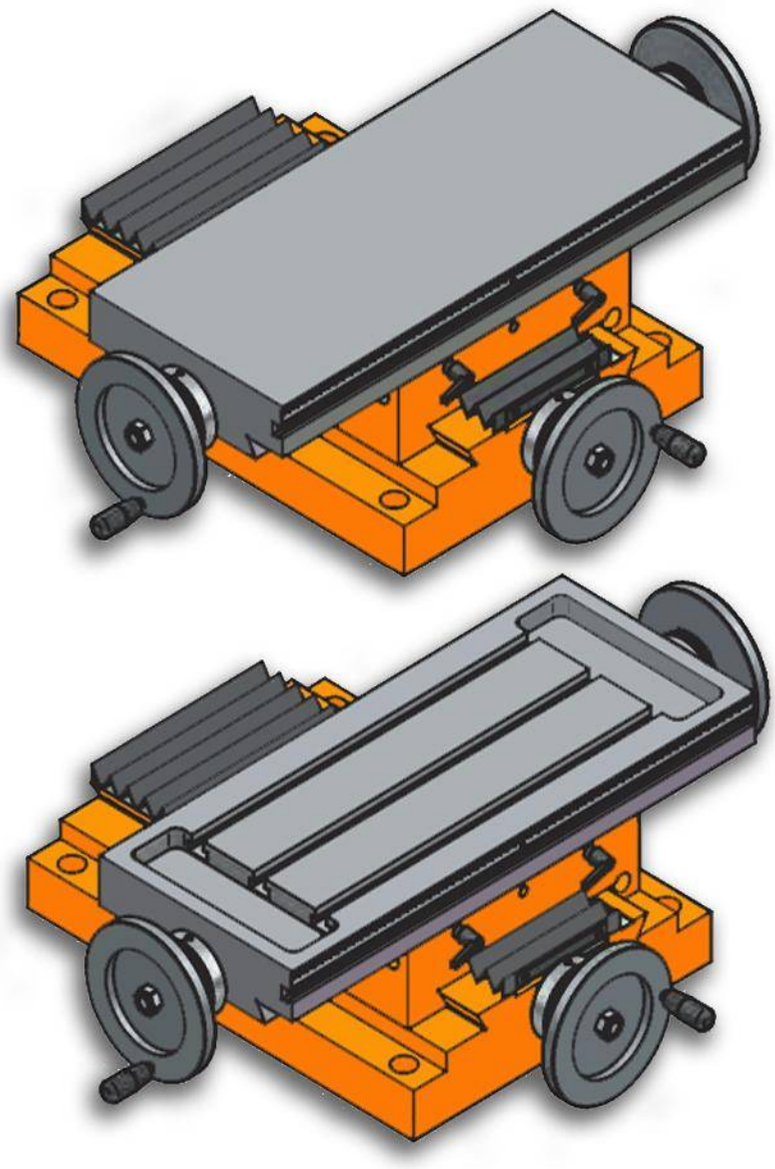

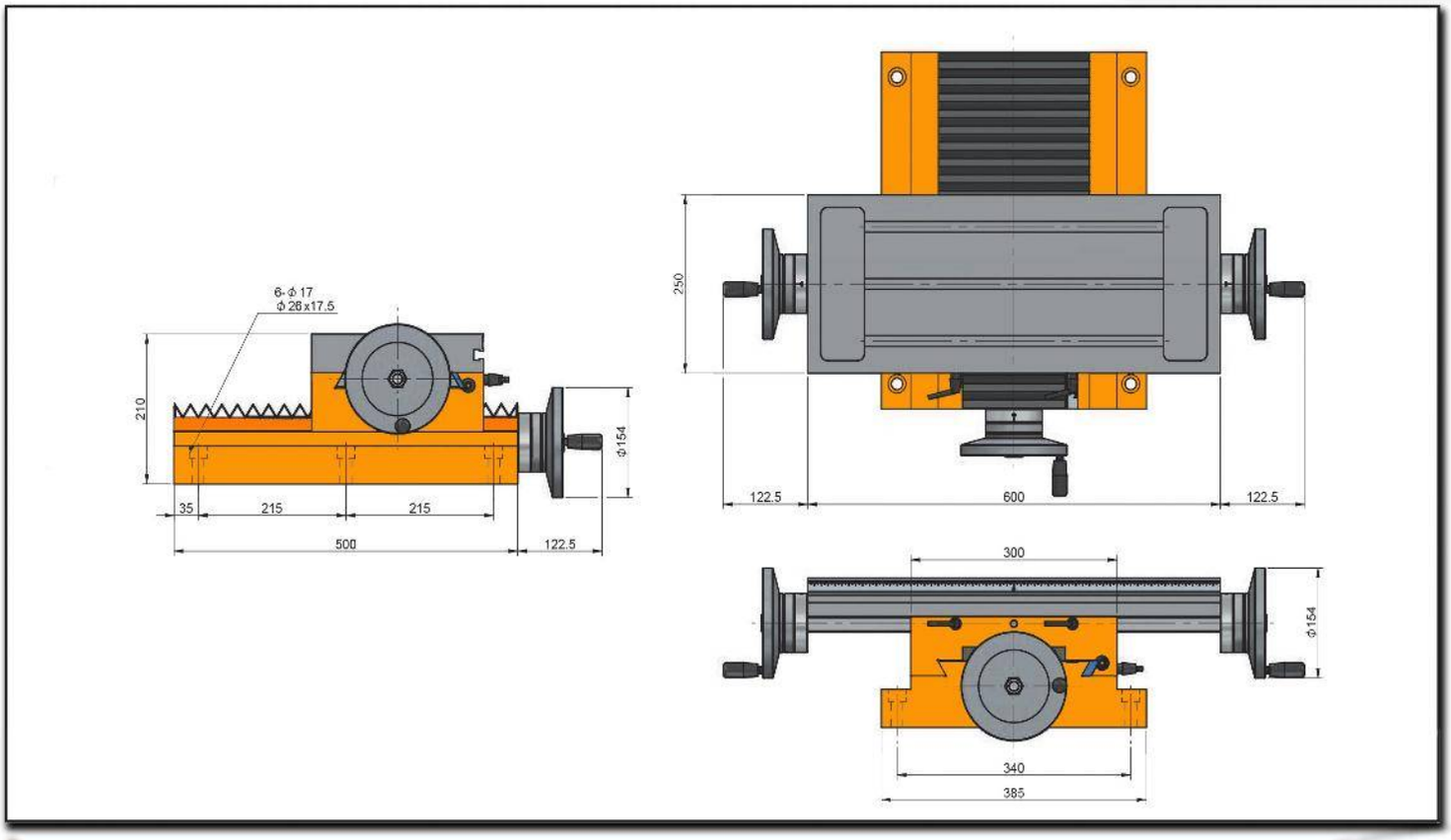

Characteristics & Dimensions

MODEL	CST-250
Upper Table Dimensions	***250.00 x 600.00***
Base Dimensions	***385.00 x 500.00***
"Y" Maximum Stroke	***300.00***
"X" Maximum Stroke	***220.00***
Dispositive Weight (Kg)	***141.00***

***** All dimensions are given in millimeters.*

CST-250A

Manual Crossed Sliding Table

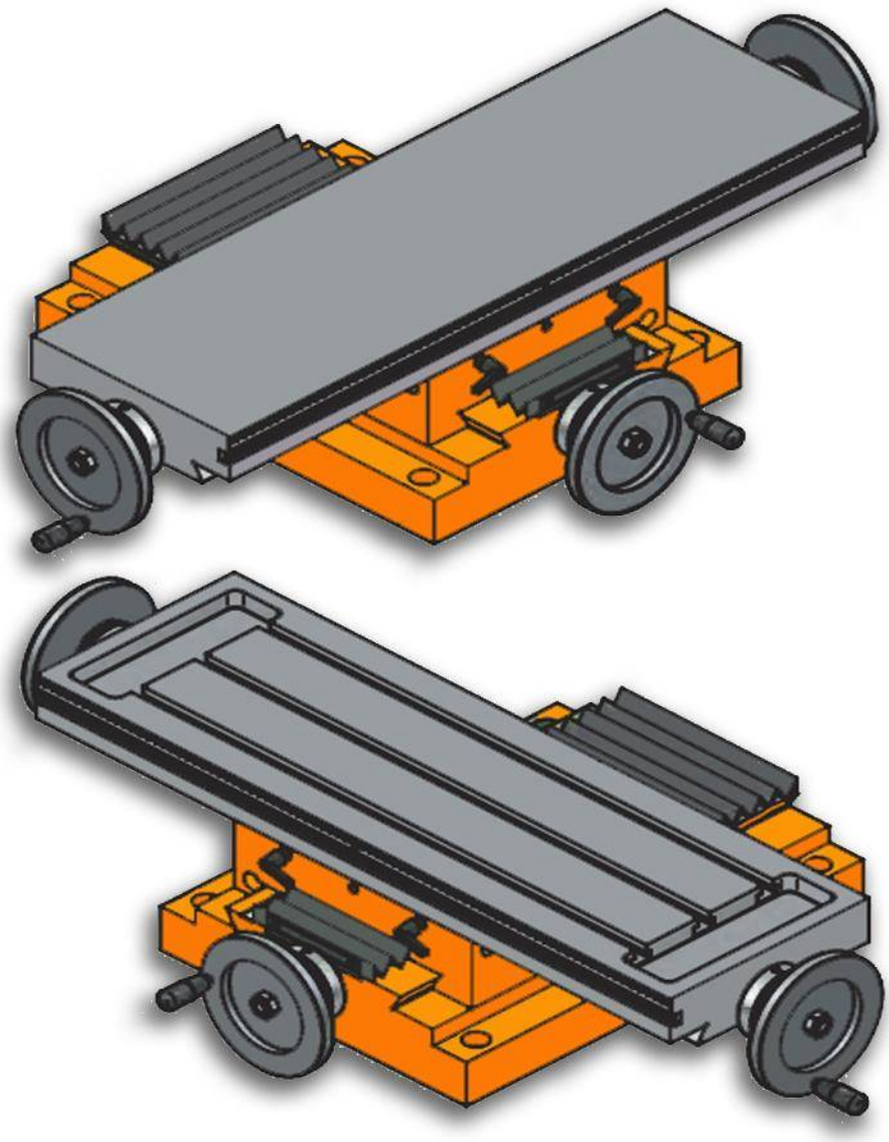

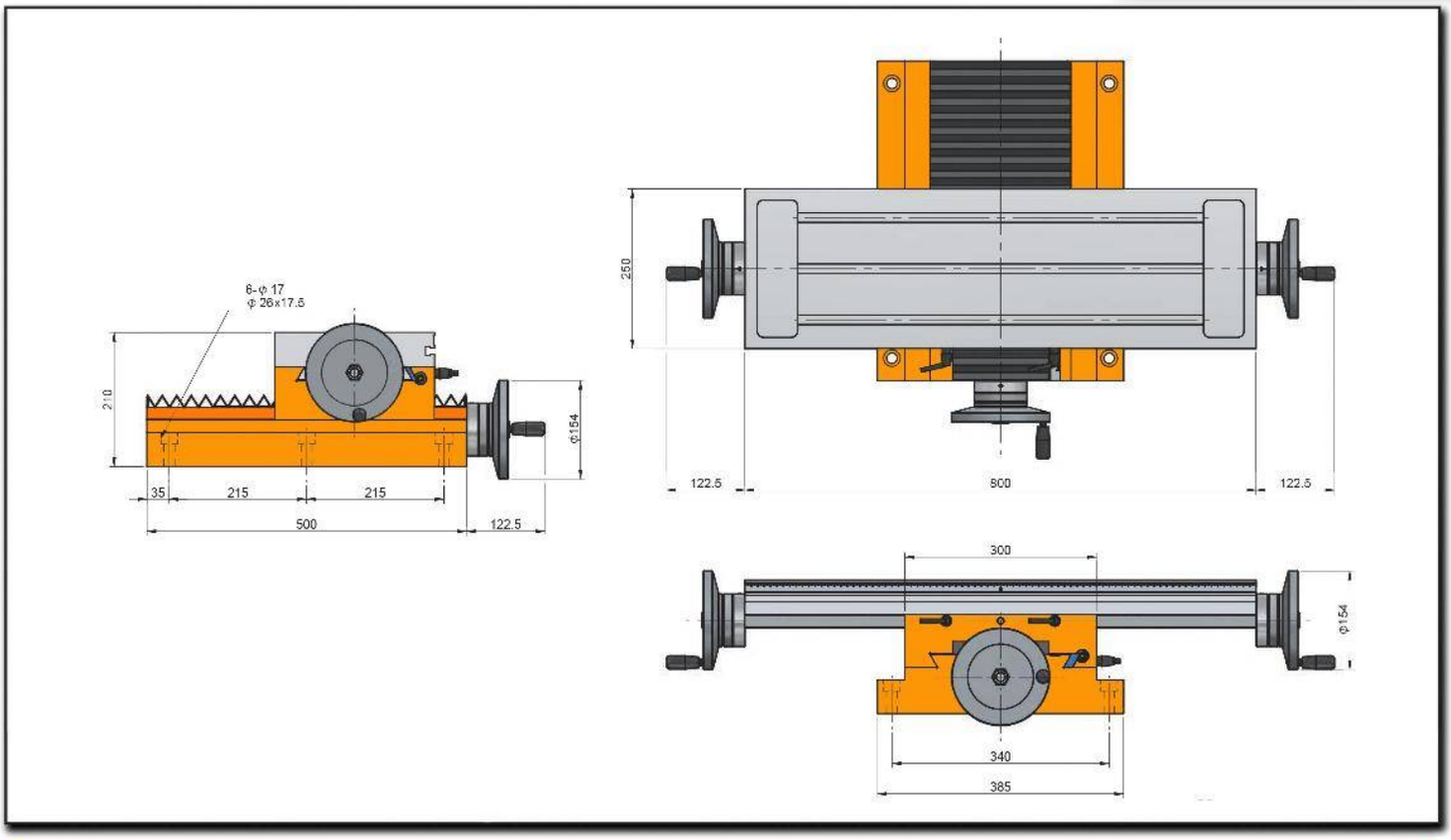

Characteristics & Dimensions

MODEL	CST-250A
Upper Table Dimensions	*250.00 X 800.00*
Base Dimensions	*385.00 X 500.00*
"Y" Maximum Stroke	*500.00*
"X" Maximum Stroke	*220.00*
Dispositive Weight (Kg)	*165.00*

**** All dimensions are given in millimeters.

CST-3024

Manual Crossed Sliding Table

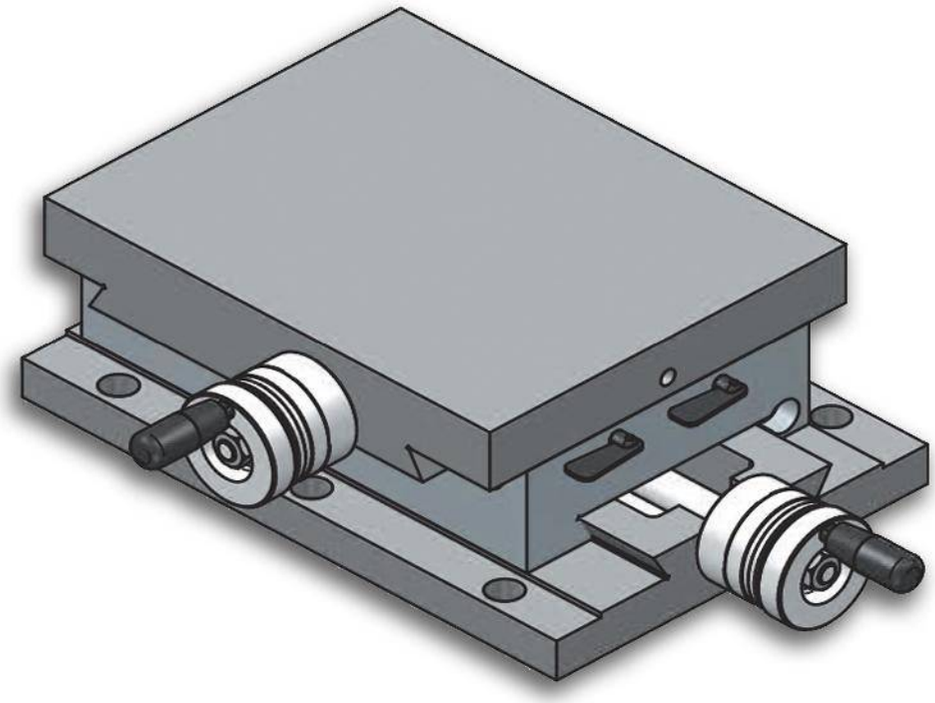

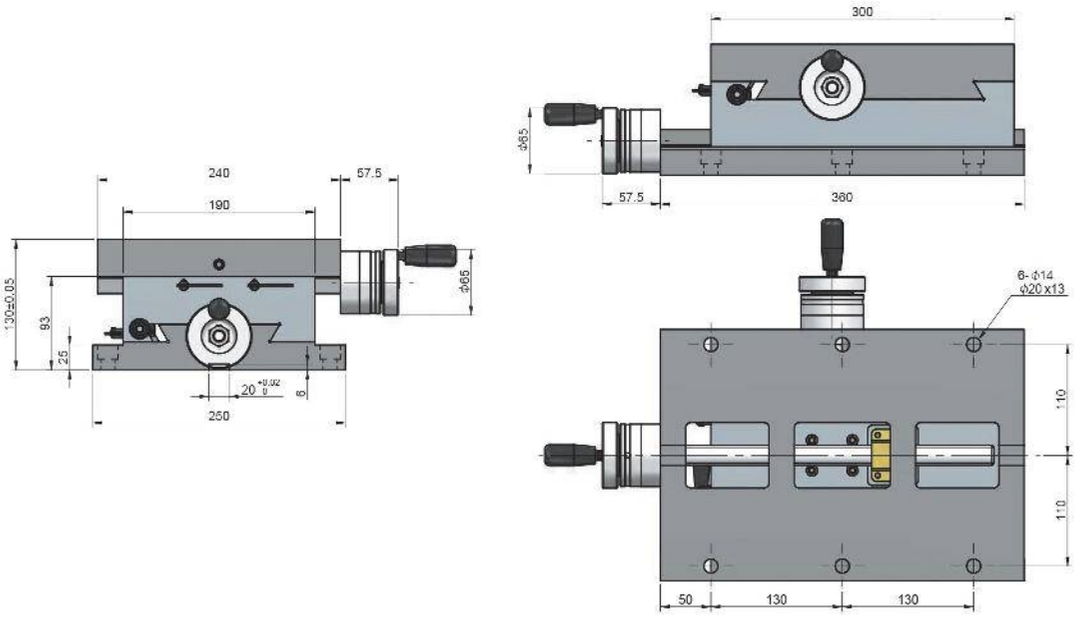

Characteristics & Dimensions

MODEL	CST-3024
Upper Table Dimensions	***300.00 x 240.00***
Base Dimensions	***250.00 x 360.00***
"Y" Maximum Stroke	***50.00***
"X" Maximum Stroke	***60.00***
Dispositive Weight (Kg)	***53.00***

***** All dimensions are given in millimeters.*

CST-3035

Manual Crossed Sliding Table

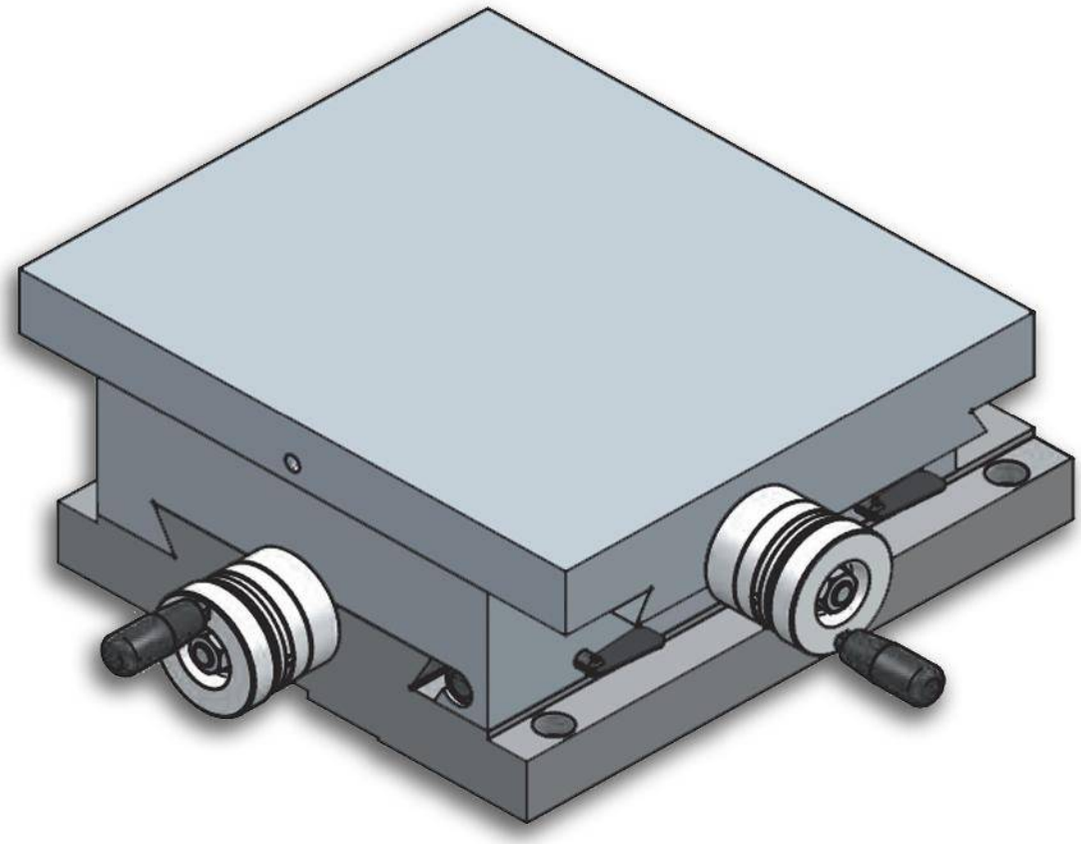

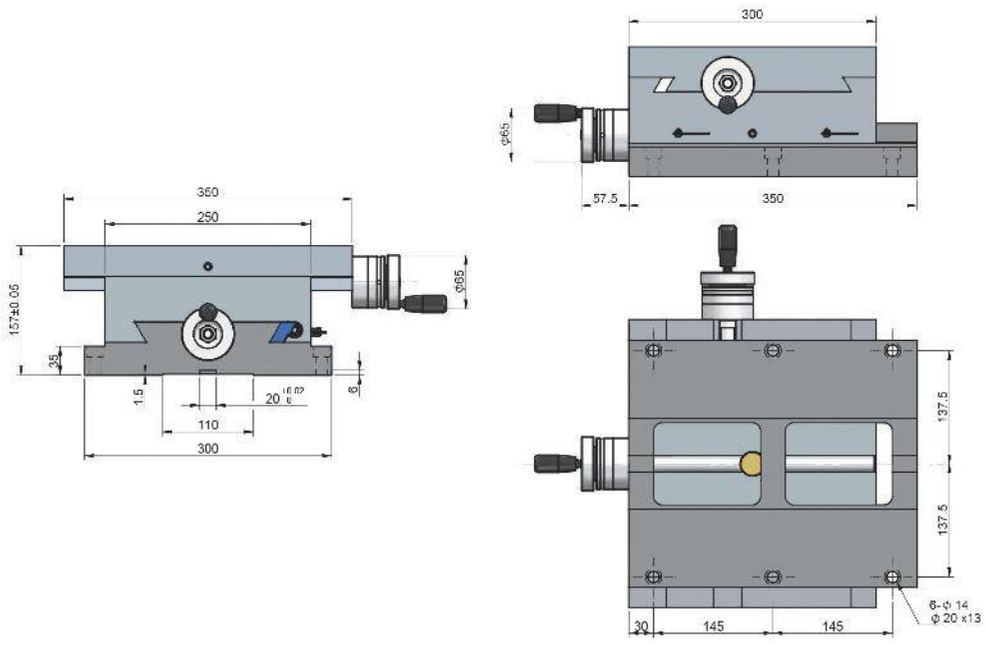

Characteristics & Dimensions

MODEL	CST-3035
Upper Table Dimensions	***300.00 x 350.00***
Base Dimensions	***300.00 x 350.00***
"Y" Maximum Stroke	***100.00***
"X" Maximum Stroke	***50.00***
Dispositive Weight (Kg)	***78.00***

***** All dimensions are given in millimeters.*

CST-3650

Manual Crossed Sliding Table

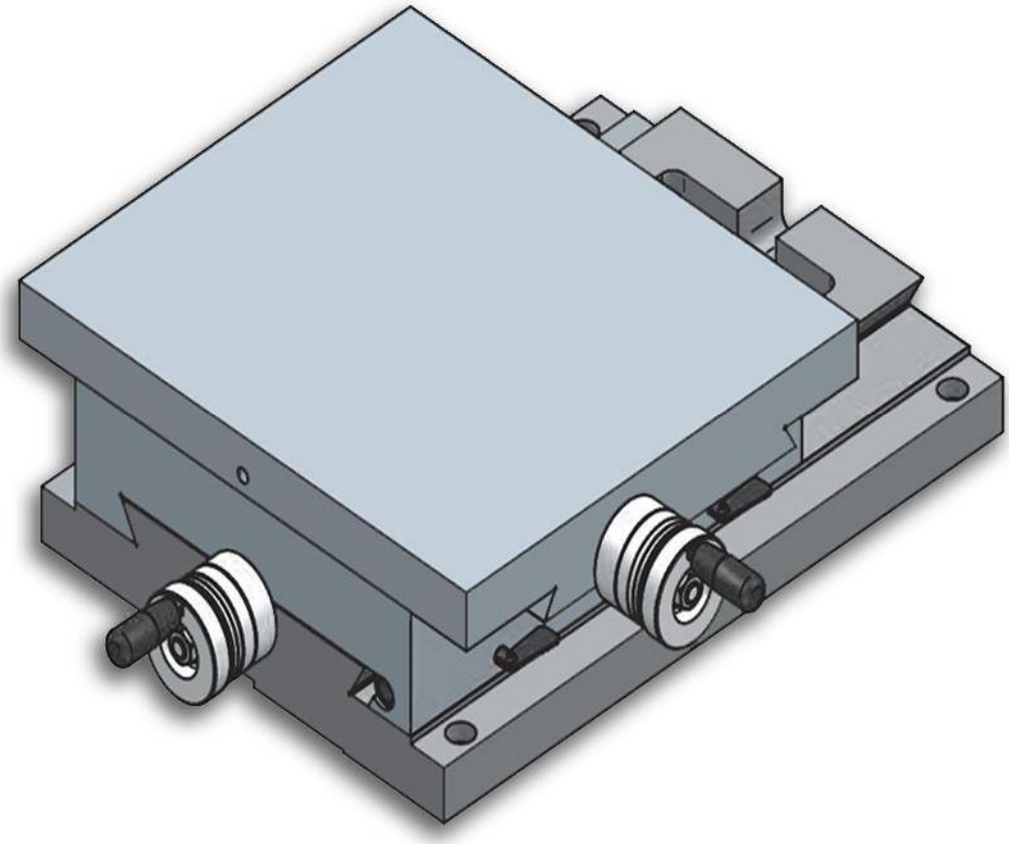

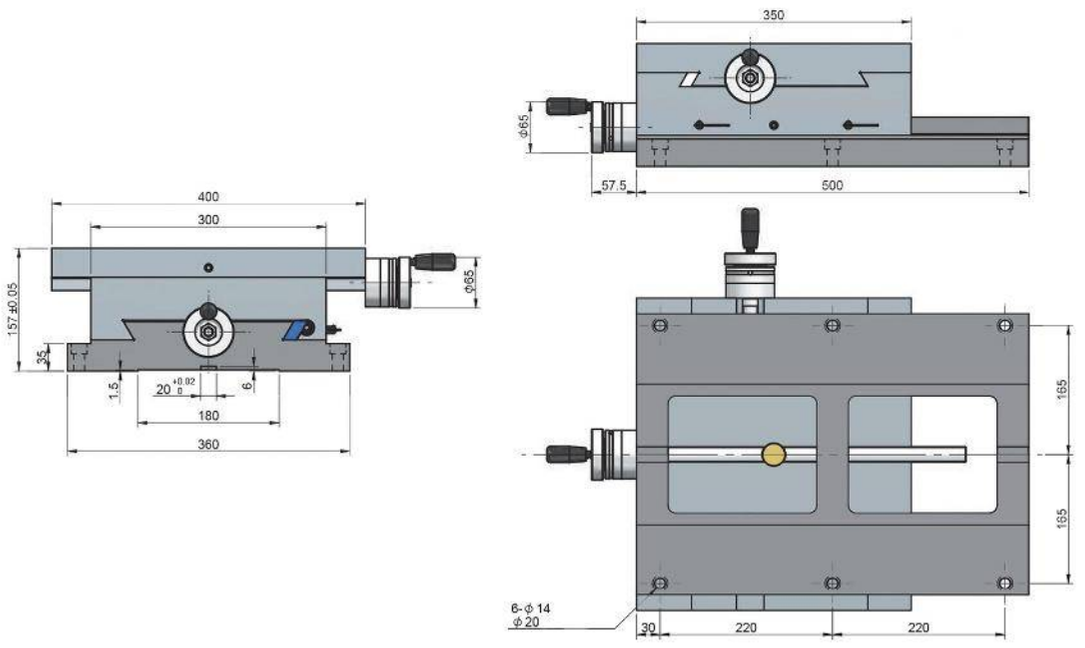

Characteristics & Dimensions

MODEL	CST-3650
Upper Table Dimensions	***350.00 x 400.00***
Base Dimensions	***360.00 x 500.00***
"Y" Maximum Stroke	***100.00***
"X" Maximum Stroke	***150.00***
Dispositive Weight (Kg)	***115.00***

***** All dimensions are given in millimeters.*

D51N SERIES

DRILLING/TAPPING DOUBLE SPINDLE HEAD

D51N

Drilling & Tapping Double Purpose Spindle Head

(Pre Assambled Devide)

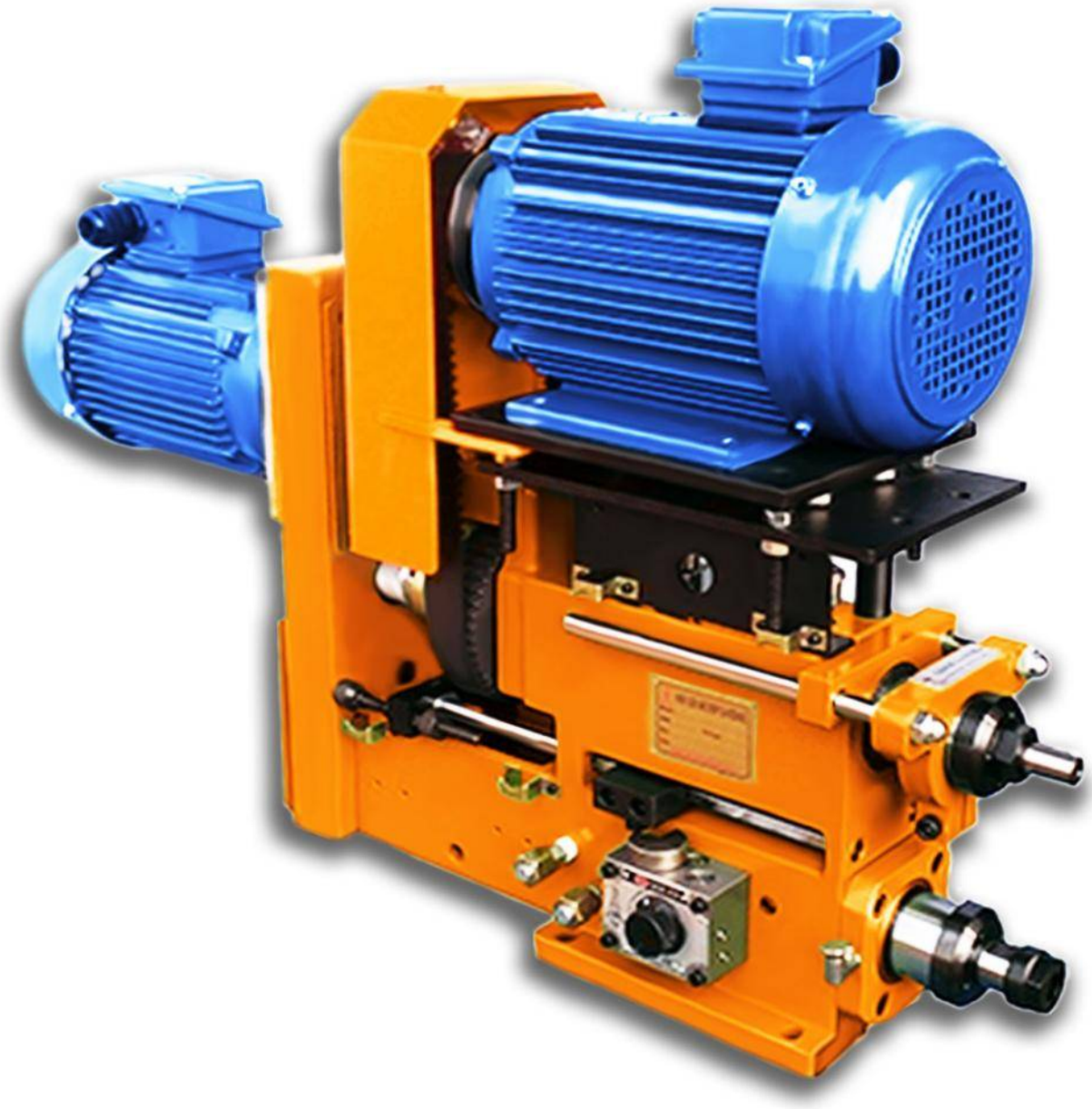

Characteristics & Dimensions

D51N

MODEL	SD5-85
Drilling Capacity (S45C)	*Ø13*
Maximum Stroke	*85.00*
Maximum Speed (r.p.m.)	*Ø13*
Propel Pressure (Kg/cm²)	*85.00*
Cylinder Diameter (cm²)	*(F) 21.50 | (B) 11.50*
Unit Power (H.P.)	*1.00*
Transmission Belt	*5M - 615*
Net Weight (Kg)	*38.00*
Spindle Bearing	*6004ZZ x 4*
Pulley Bearing	*6203ZZ x 3*
Front Cover Seal	*DKB 50 x 62 x 10*
Piston O'Ring	*AS-53 x 3 | UHS53*
Front Cover O'Ring	*AG-58 x 2 | AP-50 x 2 | AG-68 x 1*
Back Cover Seal	*TC35 x 45 x 8*
Back Cover O'Ring	*AG-58 x 2 | CPU-35 x 45 x 6*

***** All dimensions are given in millimeters.*

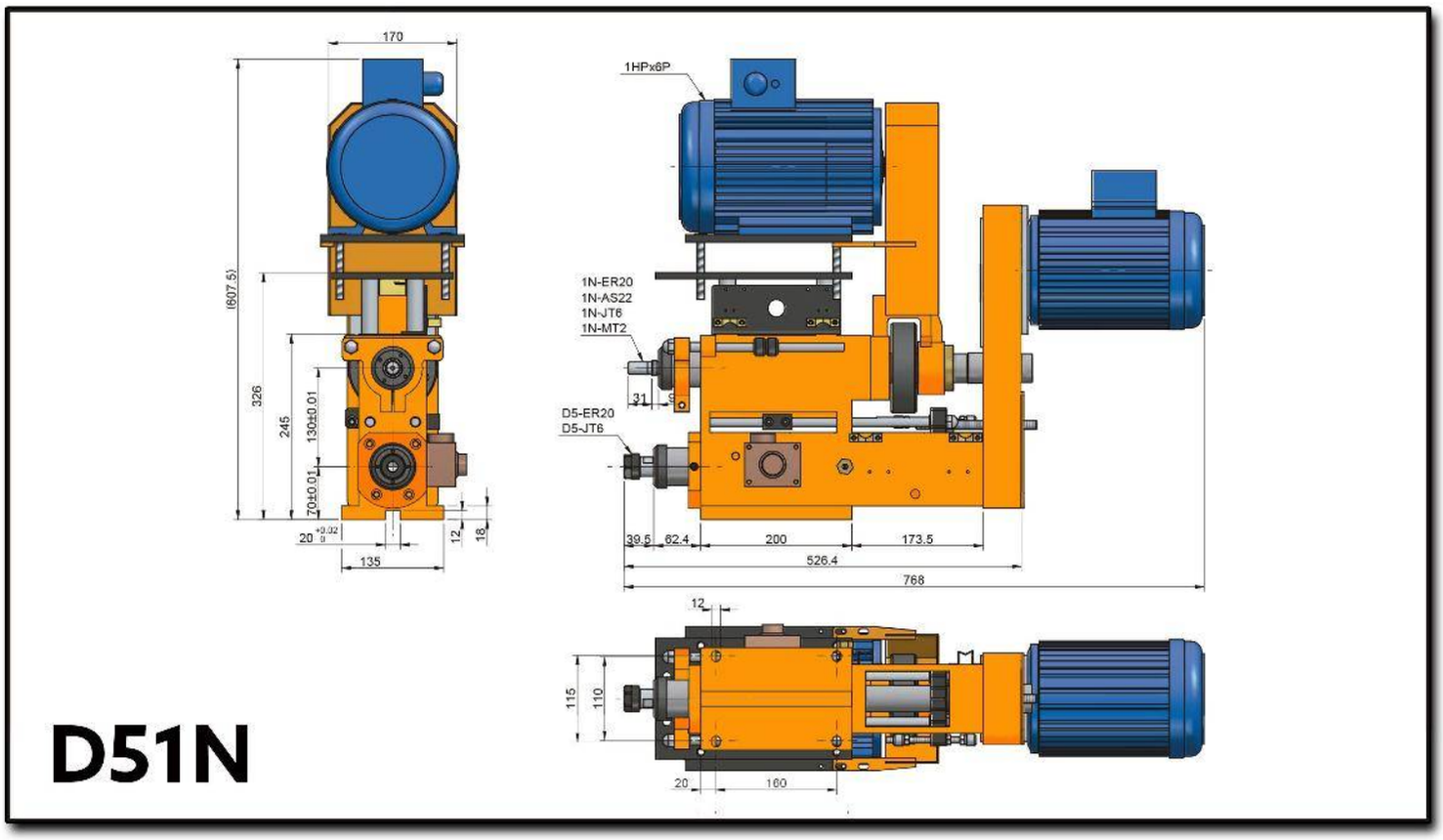
170
(607.5)
326
245
130±0.01
70±0.01
20 +0.02 0
135
12
18
1HPx6P
1N-ER20
1N-AS22
1N-JT6
1N-MT2
31
D5-ER20
D5-JT6
39.5
62.4
200
173.5
526.4
768
12
115
110
20
160
D51N

Characteristics & Dimensions

D51N	
MODEL	ST1-65
Tapping Capacity (S45C)	*M12*
Maximum Stroke	*65.00*
Thread Guide Pitch	*0.40 ~ 2.00*
Unit Power (H.P.)	*1.00*
Net Weight (Kg)	*42.00*
Spindle Bearing	*6004ZZ x 3*
Pulley Bearing	*6006ZZ x 3*
Spindle Seal	*TC-25 x 42 x 8 | TC50 x 62 x 10*

***** All dimensions are given in millimeters.*

EXT SERIES

HIGH SPEED GEAR INDEXING TABLE

EXT-420N
CNC High Speed Gear Indexing Table

The characteristics of this type of indexing tables are basically the same as those of the hydraulically coupled indexing tables *(HTC Series)*, only the high-speed movements and their exacting are carried out by a *Servo Motor.*



Characteristics & Dimensions

Model	EXT-420N
Table Diameter Fixed Side	Ø250
Drawn Center	Ø80
Indexing precision *(Accumulative)(arc-sec)*	4"
Repeatability *(arc-sec)*	1±"
Indexing Positions *(Standard)*	2 / 3 / 4 / 6 / 8 / 12 / 24
Indexing Positions *(Special)*	5 / 9 / 10 / 20
Turning Direction	CW & CCW
Installation	Horizontal or Vertical
Drawn Deviation From Center	0.020
Deviation From Top Cover	0.010
Superior Cover Flatness	0.015
Gripping System *(Hydraulic)(Kg/cm²)*	35.000
Gripping Torque *(Kg)*	3,300.000

*** All dimensions are given in millimeters.

EXT-420N

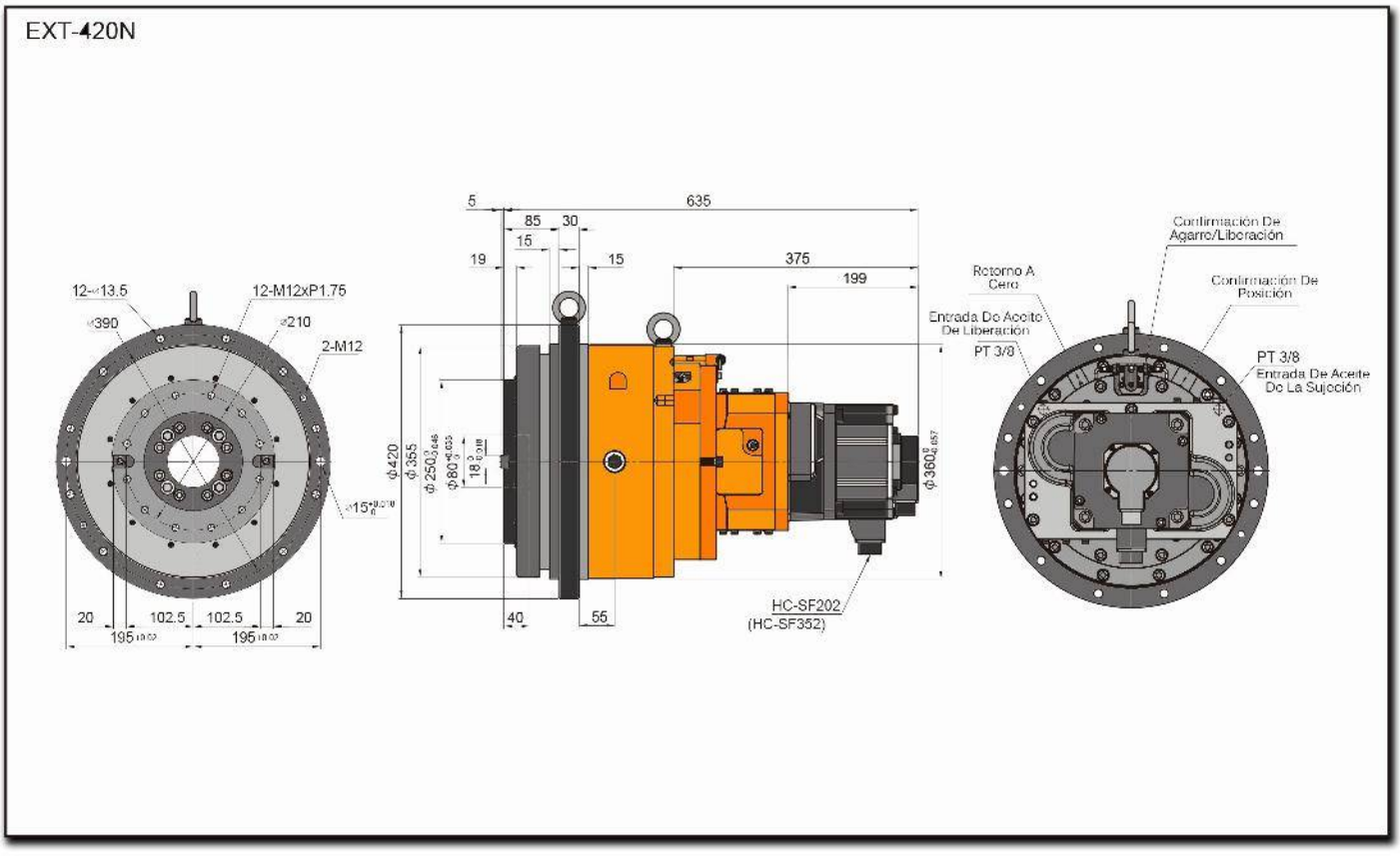
12-⌀13.5
⌀390
12-M12xP1.75
⌀210
2-M12
15°
20
102.5
102.5
20
195
195
5
635
85
30
15
19
15
375
199
ϕ420
ϕ355
ϕ250
ϕ80
18
ϕ360
40
55
HC-SF202
(HC-SF352)
Retorno A Cero
Entrada De Aceite De Liberación
PT 3/8
Confirmación De Agarre/Liberación
Confirmación De Posición
PT 3/8
Entrada De Aceite De La Sujeción

Characteristics & Dimensions

Model		EXT-420N
Servo Motor (Optional)		*HC-SFS202*
Rotating Maximum Speed *(r.p.m.)*	Table	*33.30*
	Motor	*2,000.00*
Step Ratio		*1/60*
Instant Permissible Inertia GD^2 *(Kg-m^2)*		*110.00*
Rotating Torque *(Kg-m)*		*44.00*
Cutting Permissible Torque *(Kg-m)*	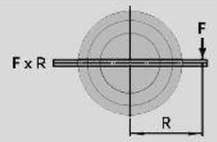	*500.00*
	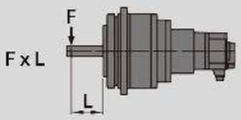	*300.00*
	Vertically	*350.00*
	Horizontally	*200.00*
Net Weight *(kg)*		*214.00*

*** All dimensions are given in millimeters.

EXT-560N
CNC High Speed Gear Indexing Table

The characteristics of this type of indexing tables are basically the same as those of the hydraulically coupled indexing tables *(HTC Series)*, only the high-speed movements and their exacting are carried out by a *Servo Motor.*



Characteristics & Dimensions

Model	EXT-560N
Table Diameter Fixed Side	Ø350
Drawn Center	Ø10
Indexing precision *(Accumulative)(arc-sec)*	4"
Repeatability *(arc-sec)*	1±"
Indexing Positions *(Standard)*	2 / 3 / 4 / 6 / 8 / 12 / 24
Indexing Positions *(Special)*	5 / 9 / 10 / 20
Turning Direction	CW & CCW
Installation	Horizontal Y Vertical
Drawn Deviation From Center	0.020
Deviation From Top Cover	0.010
Superior Cover Flatness	0.015
Gripping System *(Hydraulic)(Kg/cm²)*	35.000
Gripping Torque *(Kg)*	7,580.000

*** All dimensions are given in millimeters.

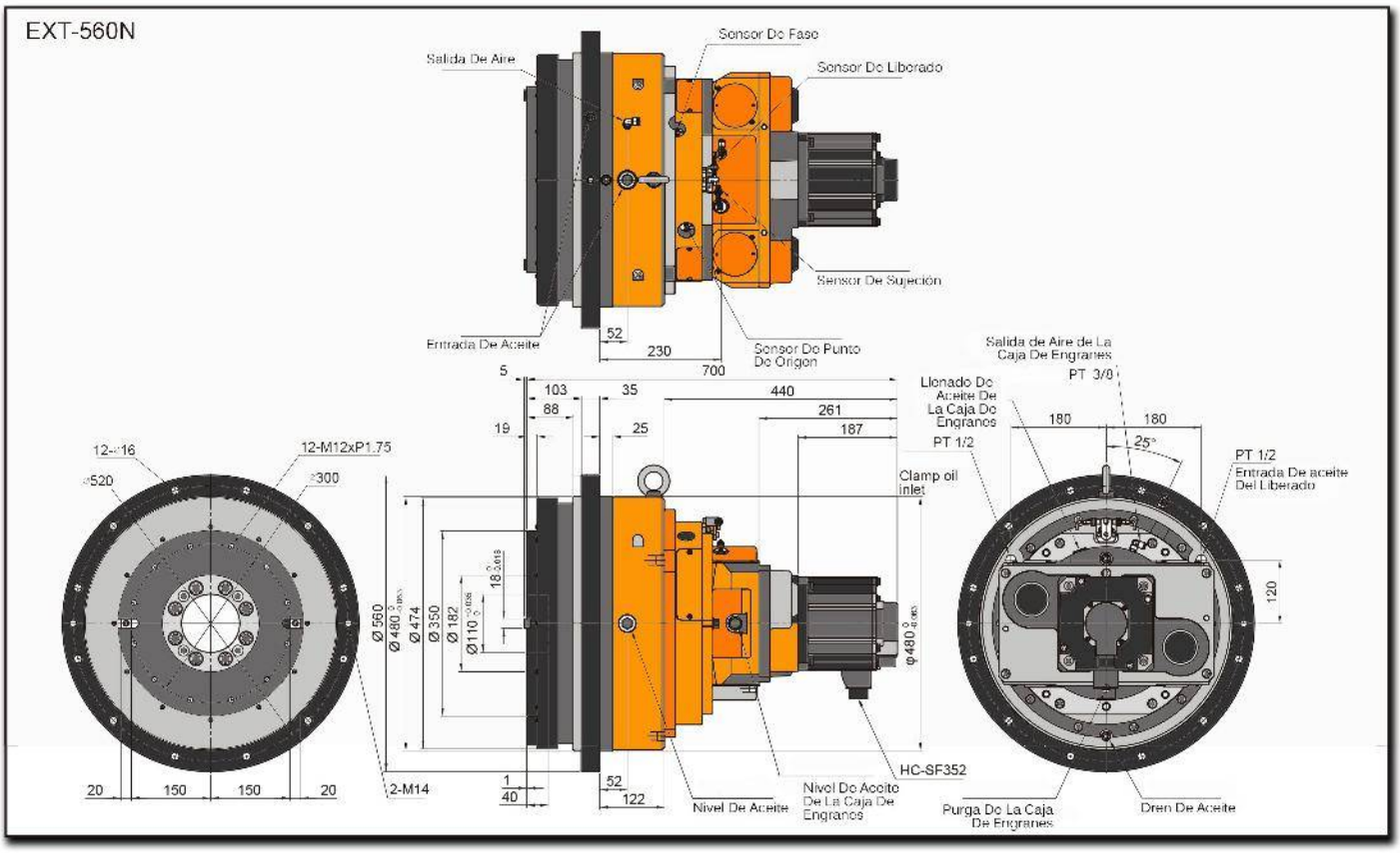
EXT-560N
Salida De Aire
Sensor De Fase
Sensor De Liberado
Sensor De Sujeción
Entrada De Aceite
Sensor De Punto De Origen
52
230
700
5
103
88
19
35
25
440
261
187
Salida de Aire de La Caja De Engranes
PT 3/8
Llenado De Aceite De La Caja De Engranes
PT 1/2
180
180
25°
PT 1/2
Entrada De aceite Del Liberado
Clamp oil inlet
12-M16
12-M12xP1.75
Ø520
Ø300
Ø 560
Ø 480
Ø 474
Ø 350
Ø 182
Ø110
18
120
HC-SF352
2-M14
20
150
150
20
1
40
52
122
Nivel De Aceite
Nivel De Aceite De La Caja De Engranes
Purga De La Caja De Engranes
Dren De Aceite

Characteristics & Dimensions

Model		EXT-560N
Servo Motor (Optional)		*HC-SFS352*
Rotating Maximum Speed *(r.p.m.)*	Table	*22.20*
	Motor	*2,000.00*
Step Ratio		*1/90*
Instant Permissible Inertia GD^2 *(Kg-m^2)*		*380.00*
Rotating Torque *(Kg-m)*		*150.00*
Cutting Permissible Torque *(Kg-m)*	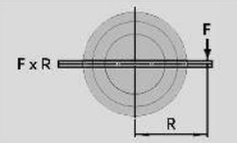	*1,800.00*
	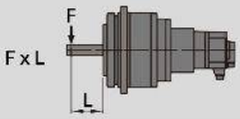	*800.00*
	Vertically	*700.00*
	Horizontally	*400.00*
Net Weight *(kg)*		*374.00*

**** All dimensions are given in millimeters.*

FMD SERIES

DRILLING/TAPPING SERVO COMPACT SPINDLES FLANGE TYPE

FMD155-NT40

Drilling/Tapping Servo Compact Spindle Head Flange Type

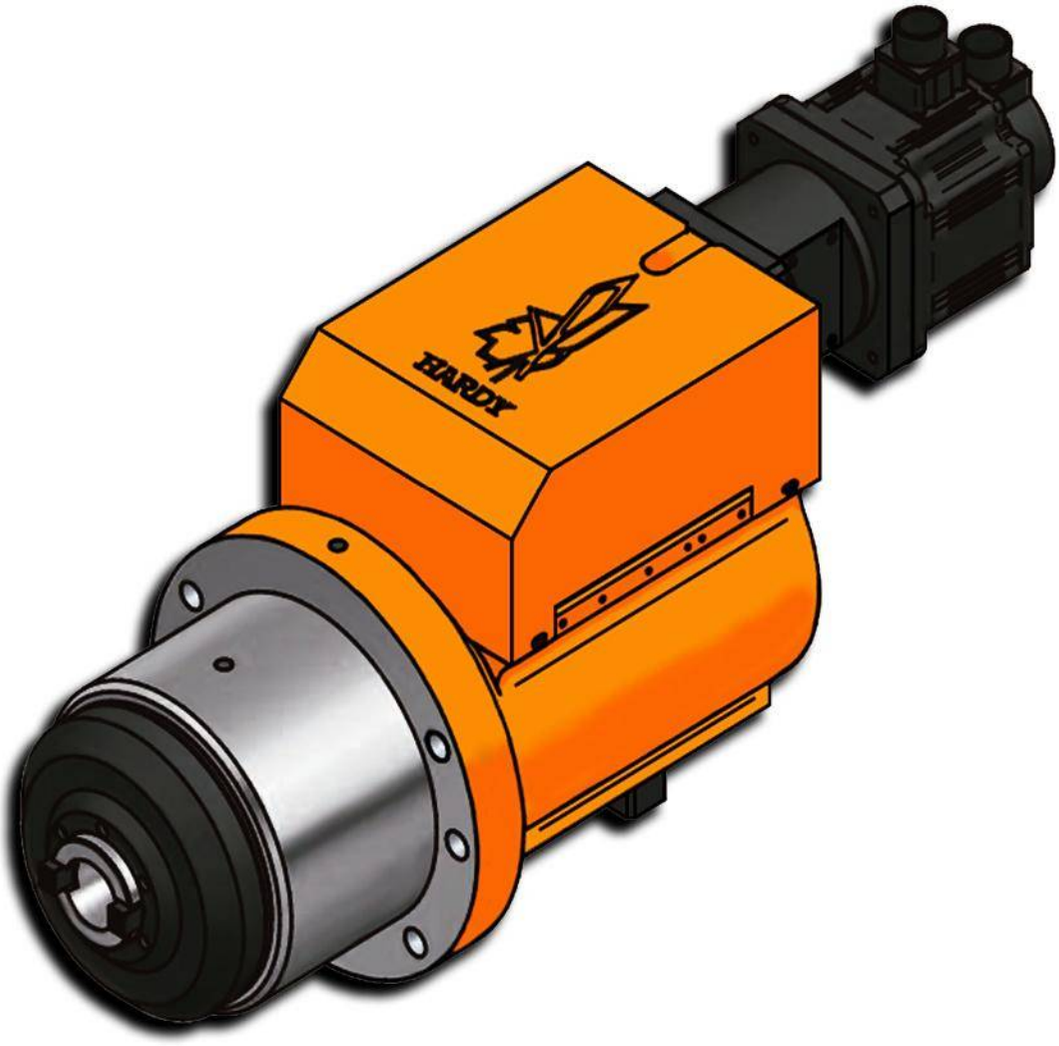

Characteristics & Dimensions

Model	FMD155-NT40			
Drilling/Tapping Capacity (S45C)	Ø30 / M24			
Maximum Stroke	120.00			
Maximum Speed (r.p.m.)	2500.00			
Maximum Power (Kw)	3.70			
Spindle Bearings	6213 | 32213 6008 | 32008			
Ball Screw Block Bearings	7205 x 2			
Ball Screw Block Seals	TC32 x 48 x 8			
Front Cover Seal	LBH155			
Front Cover O-Ring	G155			
Piston O-Ring	P155 x 2			
Ball Screw	Ø32 x 5 x C5			
Device Voltage	220V (2,000 r.p.m.)	380V (2,000 r.p.m.)	220V (2,500 r.p.m.)	380V (2,500 r.p.m.)
Device Current (Amp)	15.00	8.70	15.20	8.80
Frequency (Hz)	67.00	67.00	83.00	83.00
Cooling System	Oil Cooling			

* All dimensions are given in millimeters.
** Oil Cooling System is not included with this device.

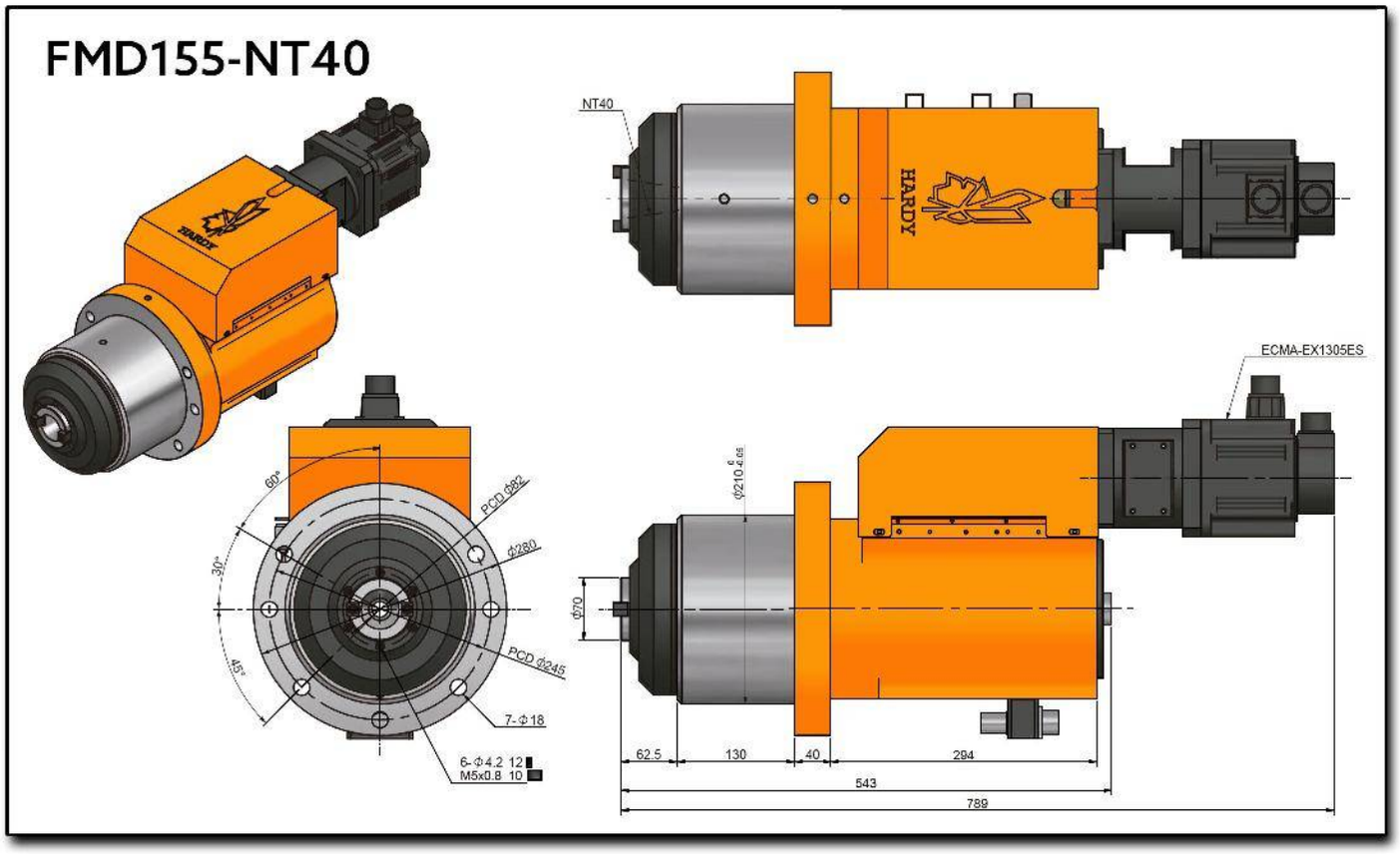
FMD155-NT40
NT40
HARDY
ECMA-EX1305ES
60°
30°
45°
PCD Φ82
Φ280
PCD Φ245
7-Φ18
6-Φ4.2 12
M5x0.8 10
Φ70
62.5
130
40
294
543
789

FMDC SERIES

DRILLING/TAPPING COMPACT SERVO SPINDLES FLANGE TYPE WITH AUTOMATIC TOOL CHANGER

FMDC155W-NT40

Drilling/Tapping Servo Compact Spindle Head Flange Type With Auto Tool Changing System

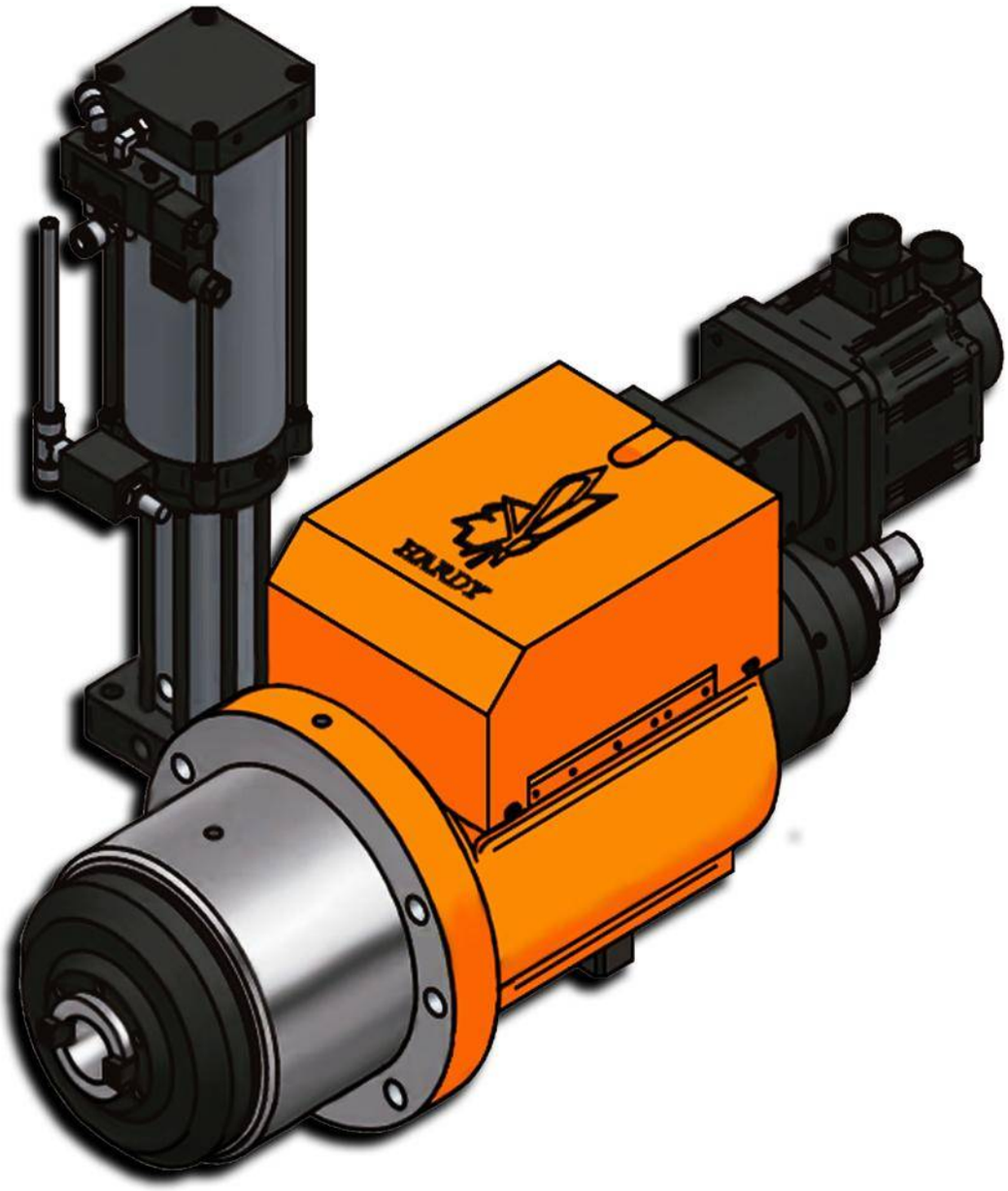

Characteristics & Dimensions

Model	FMDC155W-NT40			
Drilling/Tapping Capacity (S45C)	Ø30 / M24			
Maximum Stroke	120.00			
Maximum Speed (r.p.m.)	2500.00			
Maximum Power (Kw)	3.70			
Spindle Bearings	6213 | 32213 6008 | 32008			
Ball Screw Block Bearings	7205 x 2			
Ball Screw Block Seals	TC32 x 48 x 8			
Front Cover Seal	LBH155			
Front Cover O-Ring	G155			
Piston O-Ring	P155 x 2			
Ball Screw	Ø32 x 5 x C5			
Device Voltage	220V (2,000 r.p.m.)	380V (2,000 r.p.m.)	220V (2,500 r.p.m.)	380V (2,500 r.p.m.)
Device Current (Amp)	15.00	8.70	15.20	8.80
Frequency (Hz)	67.00	67.00	83.00	83.00
Cooling System	Oil Cooling			

* All dimensions are given in millimeters.
** Oil Cooling System is not included with this device.

FMDC155W-NT40

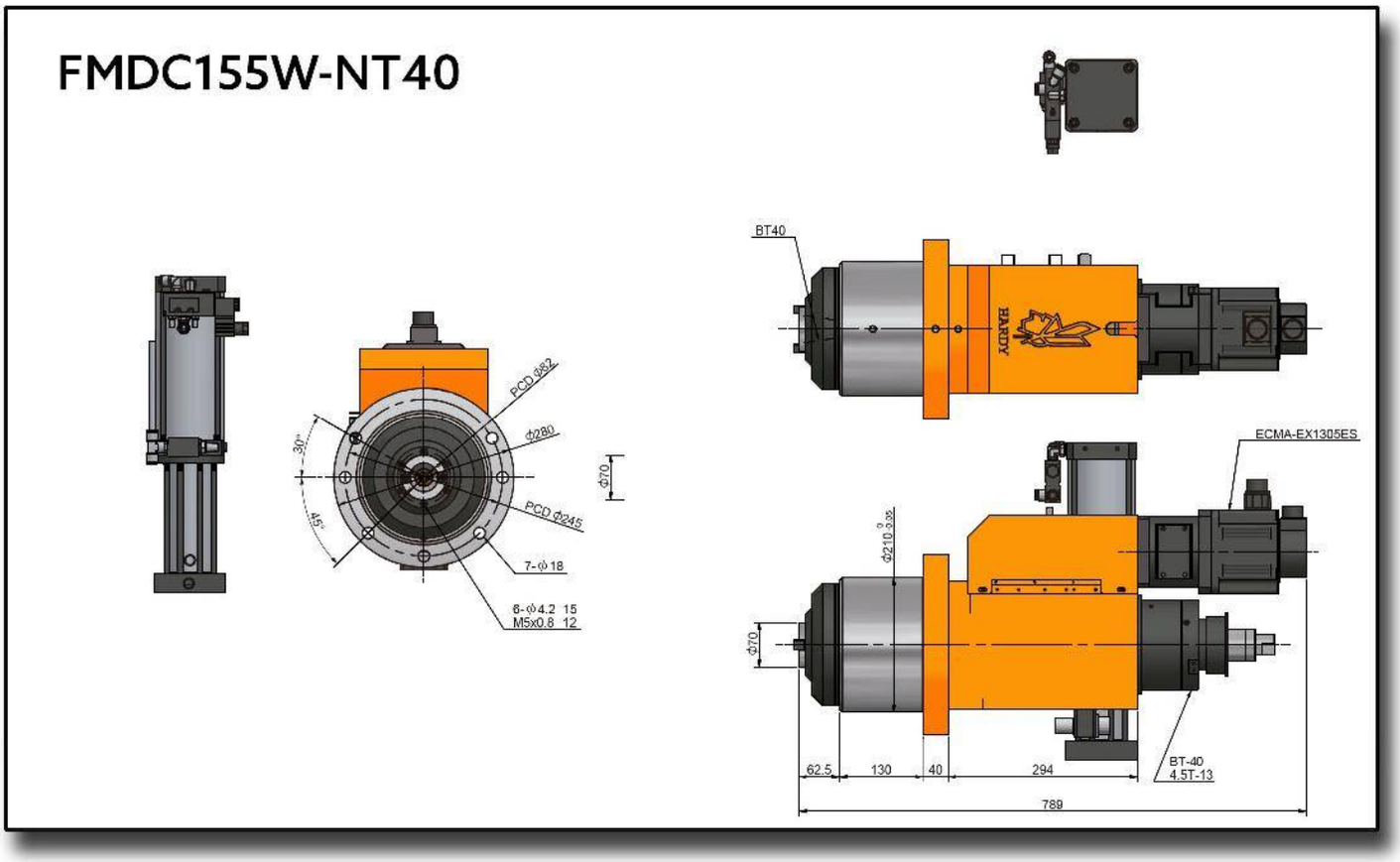

FMDM SERIES

FACING SERVO COMPACT SPINDLES FLANGE TYPE

FMDM155-FA-408SZ

Servo Compact Facing Spindle Head Flage Type

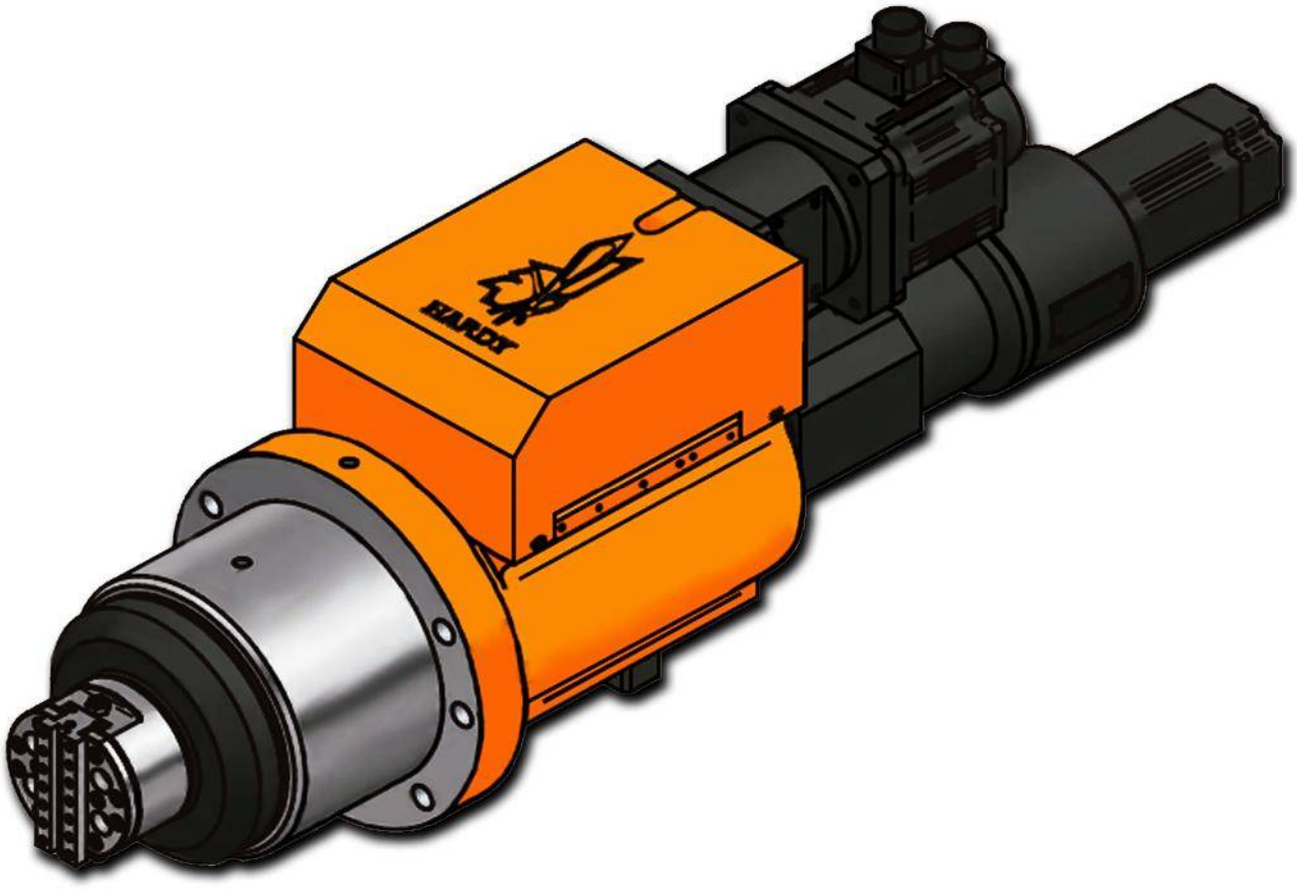

Characteristics & Dimensions

Model	FMDM155-FA-408			
Maximum Stroke	120.00			
Maximum Speed (r.p.m.)	1600.00			
Maximum Power (Kw)	3.70			
Spindle Bearings	6213 | 32213 6008 | 32008			
Front Cover Seals	LBH155			
Piston O-Ring	P155 x 2			
Feeding Spindle Ball Screw	Ø32 x 5 x C5			
Ball Screw Block Bearings	Ø20 x 5 x C5			
Ball Screw Block Seals	7205 x 2			
Facing Head Bearings	TC32 x 48 x 8			
One Slide Facing Head	FA-408			
Slide Stroke	8.00			
Voltage	220V (2,000 r.p.m.)	380V (2,000 r.p.m.)	220V (2,500 r.p.m.)	380V (2,500 r.p.m.)
Device Current (Amp)	15.00	8.70	15.20	8.80
Frequency (Hz)	67.00	67.00	83.00	83.00
Cooling System	Oil Cooling			

* All dimensions are given in millimeters.
** Oil Cooling System is not included with this device.

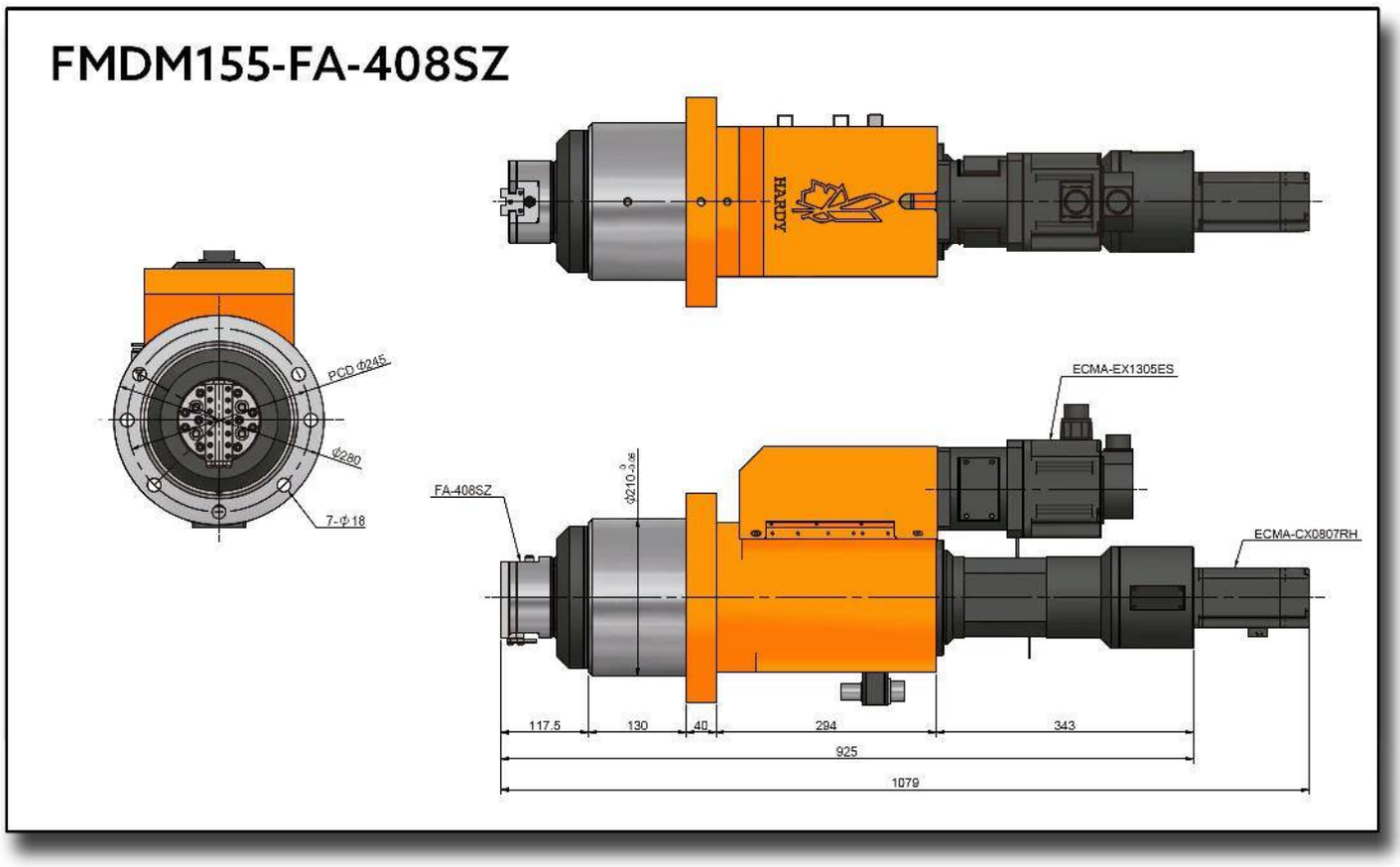
FMDM155-FA-408SZ
HARDY
PCD Φ245
Φ280
7-Φ18
ECMA-EX1305ES
FA-408SZ
Φ210
ECMA-CX0807RH
117.5
130
40
294
343
925
1079

H-CNC SERIES

CNC
SPINDLES

HB150-BT40

Belt Driven Spindle



Characteristics & Dimensions

MODEL	HB150
Specification	*BT40 - Ø150*
Maximum Spindle Speed *(r.p.m.)*	*8,000 R.P.M.*
Bearings Specification	*7014 x 2 | 7014 x 2*
Bearings Type	*Large Steel Balls*
Lubrication Type	*Grease*
Bearing Temparature Rise	*+ 18.00° C*
Position	*By Notch*
Device Coolong Media	*By Oil*
Taper Runout	*0.002 mm*
Balance Grade	*G1*
Total Device Weight *(Kg)*	*55.00*

**** Taper Runout Precission ≤ 0.003 mm.*
**** All dimensions are given in millimeters.*

HB150-BT40

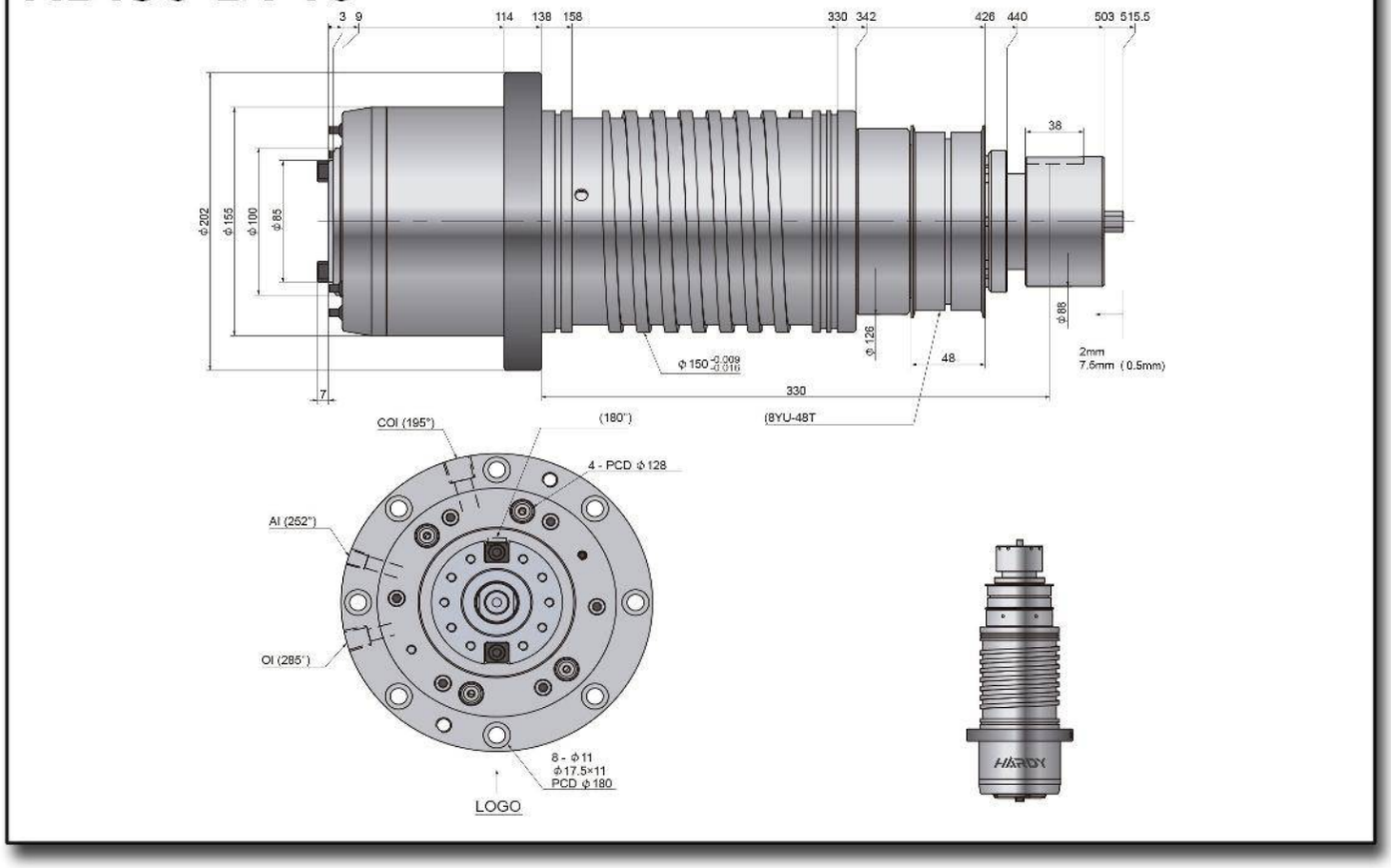
3 9 114 138 158 330 342 426 440 503 515.5
38
ϕ202
ϕ155
ϕ100
ϕ85
ϕ126
ϕ88
48
2mm
7.5mm (0.5mm)
7
330
(8YU-48T
COI (195°)
(180°)
4 - PCD ϕ128
AI (252°)
OI (285°)
8 - ϕ11
ϕ17.5×11
PCD ϕ180
LOGO
HARDY

HBC150-BT40

Belt Driven Spindle

(With Central Tool Cooling Capacity)



Characteristics & Dimensions

MODEL	HBC150
Specification	*BT40 - Ø150*
Maximum Spindle Speed *(r.p.m.)*	*8,000 R.P.M.*
Bearings Specification	*7014 x 2 | 7014 x 2*
Bearings Type	*Large Steel Balls*
Lubrication Type	*Grease*
Bearing Temparature Rise	*+ 18.00° C*
Position	*By Notch*
Device Coolong Media	*By Oil*
Taper Runout	*0.002 mm*
Balance Grade	*G1*
Total Device Weight *(Kg)*	*53.00*

**** Taper Runout Precission ≤ 0.003 mm.*
**** All dimensions are given in millimeters.*

HBC150-BT40

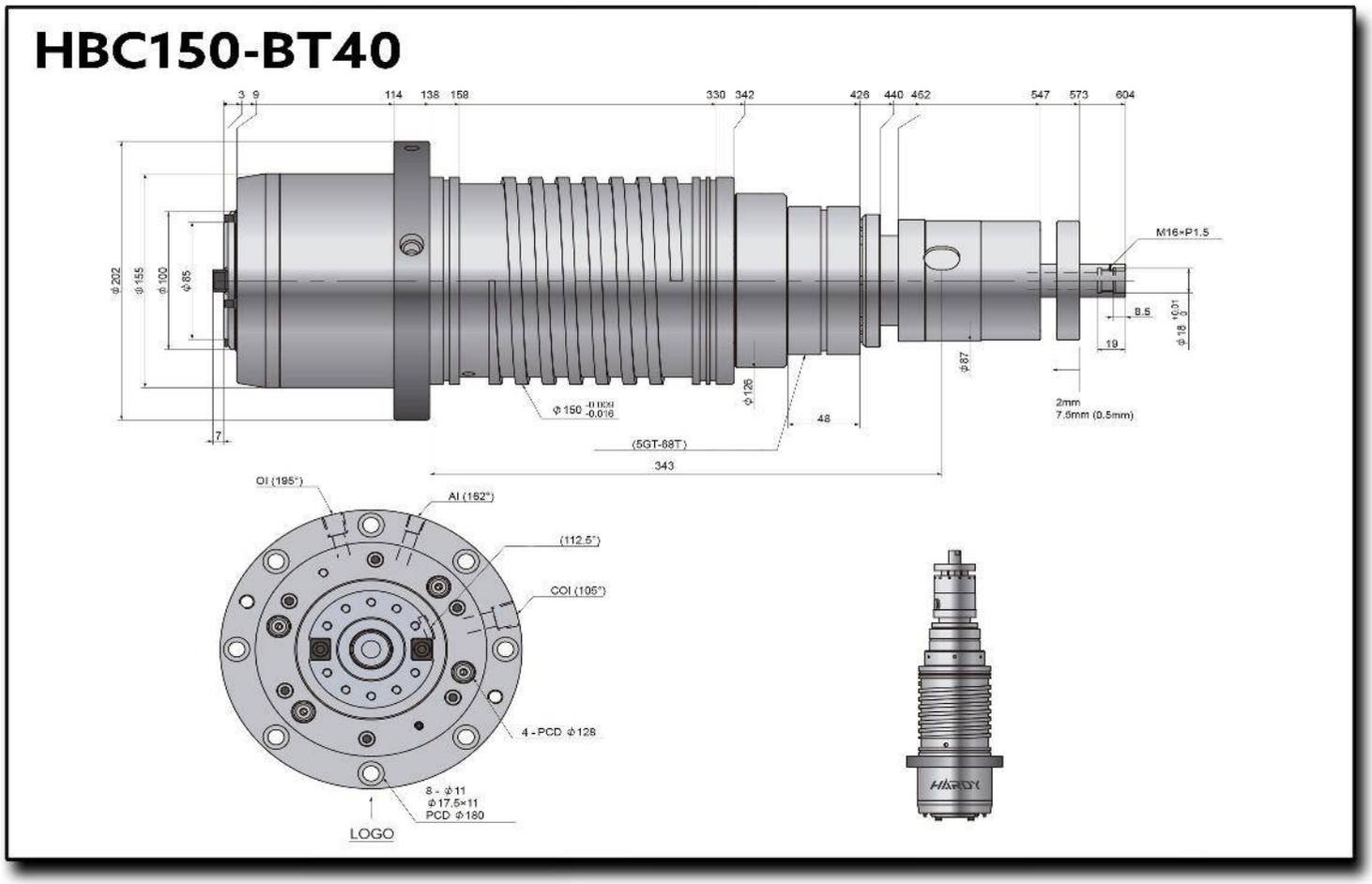
3 9 114 138 158 330 342 426 440 452 547 573 604
Φ202
Φ155
Φ100
Φ85
M16×P1.5
8.5
Φ18 +0.01 0
19
Φ87
Φ125
48
7
Φ150 -0.000 -0.016
(5GT-68T)
343
2mm
7.9mm (0.5mm)
OI (195°)
AI (152°)
(112.5°)
COI (105°)
4 - PCD Φ128
8 - Φ11
Φ17.5×11
PCD Φ180
LOGO

HD140-BT40

Direct Motor Drive Spindle



Characteristics & Dimensions

MODEL	HD140
Specification	*BT40 - Ø140*
Maximum Spindle Speed *(r.p.m.)*	*12,000 R.P.M.*
Bearings Specification	*7014 x 2 | 7014 x 2*
Bearings Type	*Large Steel Balls*
Lubrication Type	*Grease*
Bearing Temparature Rise	*+ 20.00° C*
Position	*Motor Built-In*
Device Coolong Media	*By Oil*
Taper Runout	*0.002 mm*
Balance Grade	*G1*
Total Device Weight *(Kg)*	*52.00*

**** Taper Runout Precission ≤ 0.003 mm.*
**** All dimensions are given in millimeters.*

HD140-BT40

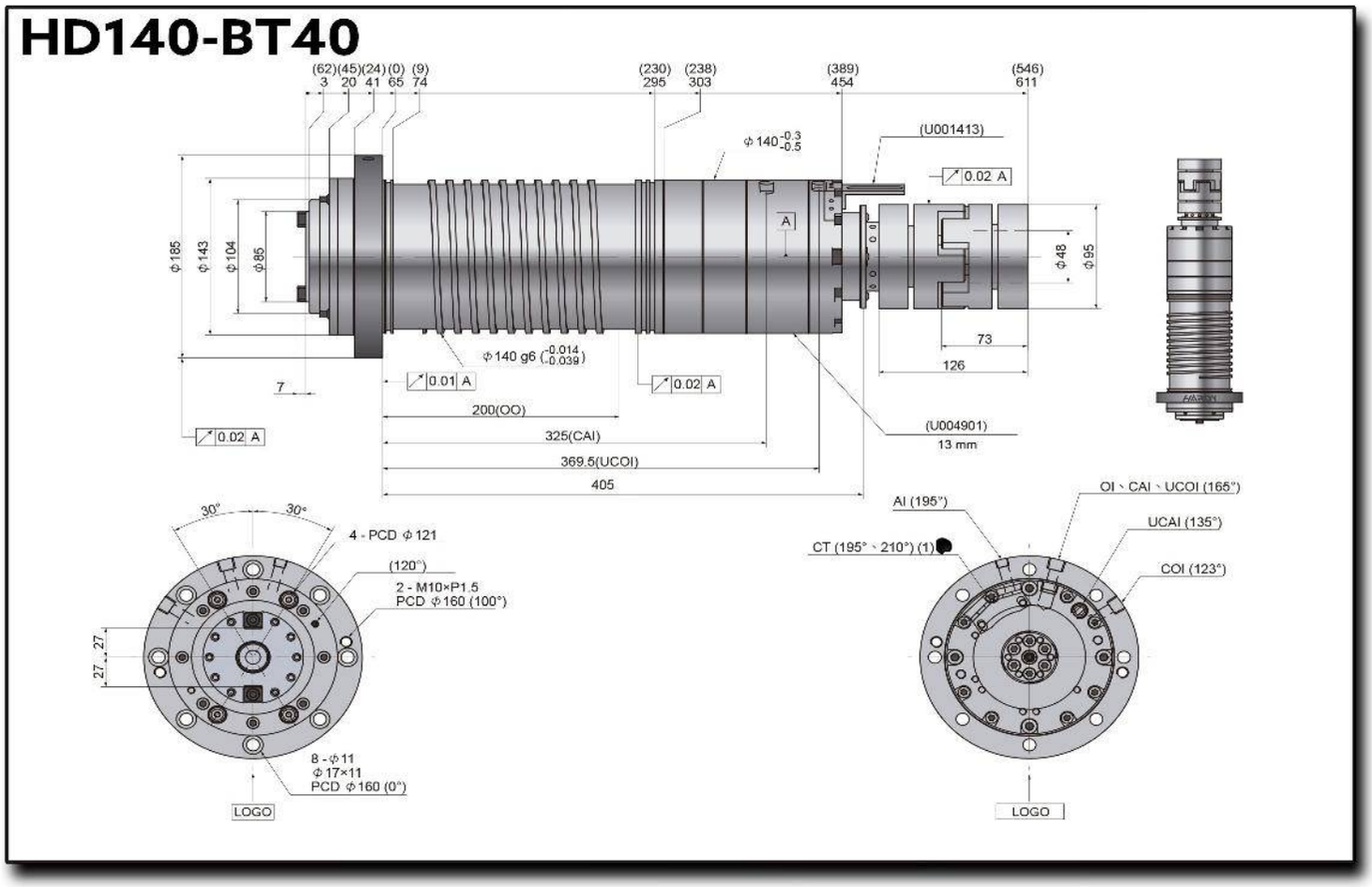
(62)(45)(24)(0) (9)
3 20 41 65 74
(230) (238)
295 303
(389)
454
(546)
611
Φ140 -0.3 -0.5
(U001413)
0.02 A
A
Φ185
Φ143
Φ104
Φ85
Φ48
Φ95
73
126
Φ140 g6 (-0.014 -0.039)
0.01 A
0.02 A
7
200(OO)
325(CAI)
369.5(UCOI)
405
(U004901)
13 mm
0.02 A
30°
30°
4 - PCD Φ121
(120°)
2 - M10×P1.5
PCD Φ160 (100°)
27
27
8 - Φ11
Φ17×11
PCD Φ160 (0°)
LOGO
AI (195°)
OI、CAI、UCOI (165°)
UCAI (135°)
CT (195°、210°) (1)
COI (123°)
LOGO

HD150-BBT40

Self Driven Spindle



Characteristics & Dimensions

MODEL	HD150
Specification	*BBT40 - Ø150*
Maximum Spindle Speed *(r.p.m.)*	*12,000 R.P.M.*
Bearings Specification	*N1014 ~ 7014 x 3 | N1012*
Bearings Type	-
Lubrication Type	*Grease*
Bearing Temparature Rise	*+ 20.00° C*
Position	*By Notch*
Device Coolong Media	*By Oil*
Taper Runout	*0.002 mm*
Balance Grade	*G1*
Total Device Weight *(Kg)*	*115.00*

**** Taper Runout Precission ≤ 0.003 mm.*
**** All dimensions are given in millimeters.*

HD150-BBT40

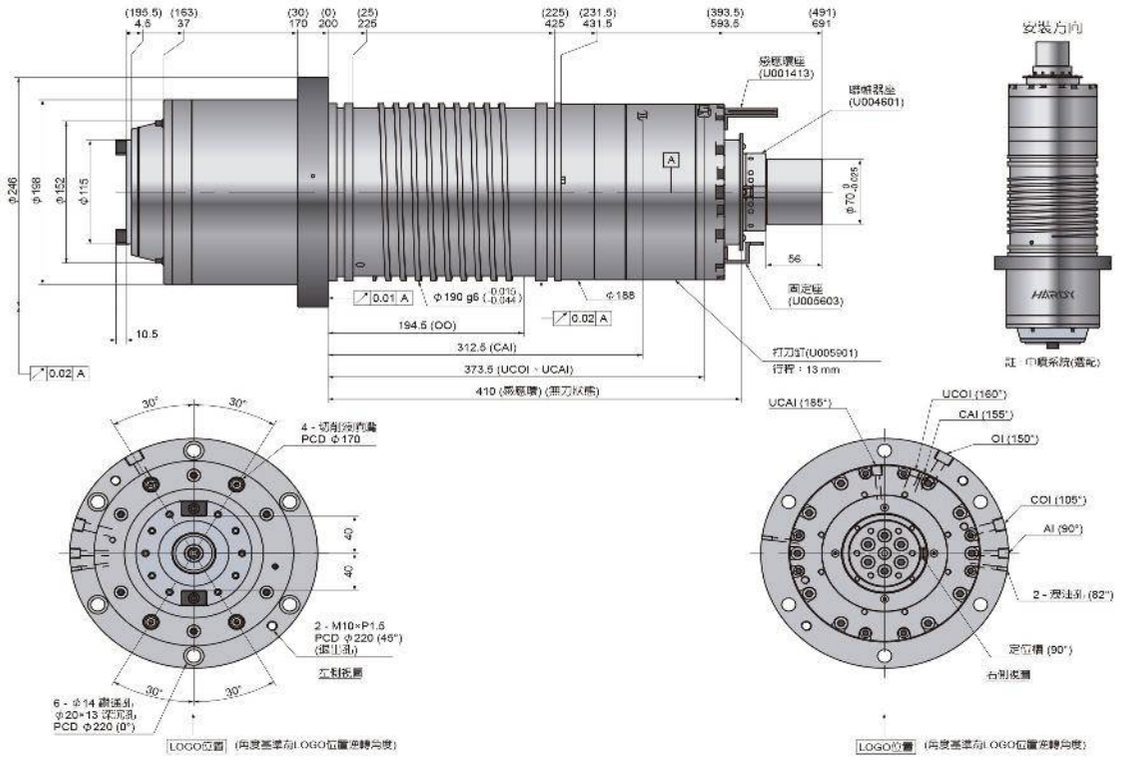

安裝方向
(195.5) 4.5
(163) 37
(30) 170
(0) 200
(25) 225
(225) 425
(231.5) 431.5
(393.5) 593.5
(491) 691
感應環座 (U001413)
磁帽器座 (U004601)
φ246
φ198
φ152
φ115
φ70
56
固定座 (U005603)
0.01 A
φ190 g6
φ188
0.02 A
194.5 (OO)
312.5 (CAI)
373.5 (UCOI、UCAI)
410 (感應環) (無刀狀態)
10.5
打刀缸(U005901)
行程：13 mm
4 - 切削液直輸 PCD φ170
2 - M10×P1.5 PCD φ220 (45°) (螺出孔)
6 - φ14 磁通孔 φ20×13 深沉孔 PCD φ220 (0°)
LOGO位置 (角度基準為LOGO位置逆轉角度)
UCAI (185°)
UCOI (160°)
CAI (155°)
OI (150°)
COI (105°)
AI (90°)
2 - 深沉孔 (82°)
定位槽 (90°)
右側視圖
LOGO位置 (角度基準為LOGO位置逆轉角度)

HD190-BT50
Self Driven Spindle



Characteristics & Dimensions

MODEL	HD190
Specification	*BT50 - Ø190*
Maximum Spindle Speed *(r.p.m.)*	*6,000 R.P.M.*
Bearings Specification	*7020 x 2 | 7020 x 2*
Bearings Type	*Large Steel Balls*
Lubrication Type	*Grease*
Bearing Temparature Rise	*+ 20.00° C*
Position	*By Notch*
Device Coolong Media	*By Oil*
Taper Runout	*0.002 mm*
Balance Grade	*G1*
Total Device Weight *(Kg)*	*115.00*

**** Taper Runout Precission ≤ 0.003 mm.*
**** All dimensions are given in millimeters.*

HD190-BT50

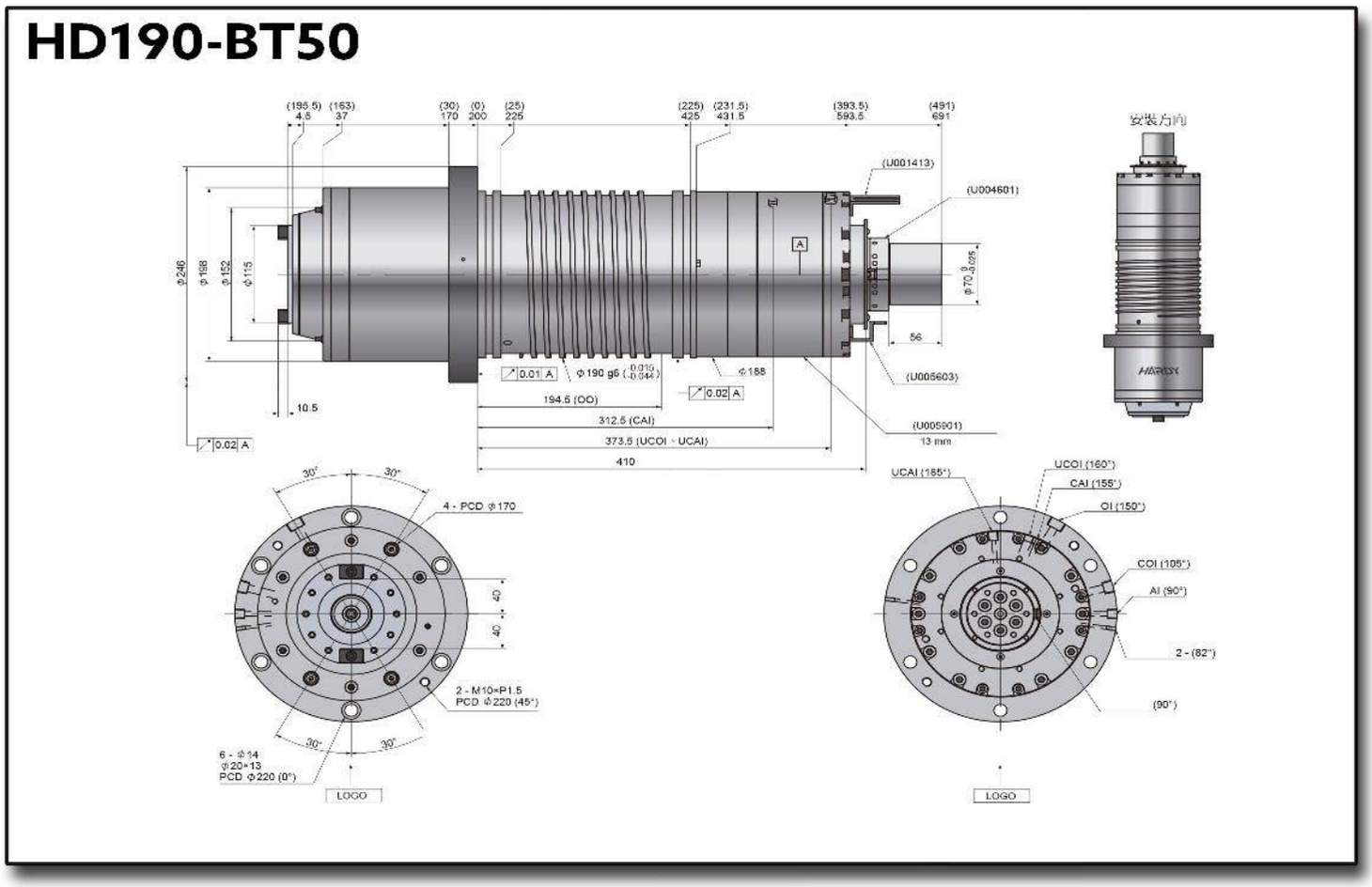
(195.5) (163)
4.5 37
(30) (0) (25)
170 200 225
(225) (231.5)
425 431.5
(393.5)
593.5
(491)
691
(U001413)
(U004601)
Φ246
Φ198
Φ152
Φ115
Φ70.3 -0.025
56
0.01 A
Φ190 g6 (-0.010 -0.044)
Φ188
(U005603)
10.5
194.5 (OO)
0.02 A
312.5 (CAI)
373.5 (UCOI ~ UCAI)
410
(U005901)
13 mm
0.02 A
安裝方向
30°
30°
4 - PCD Φ170
40
40
2 - M10×P1.5
PCD Φ220 (45°)
30°
30°
6 - Φ14
Φ20×13
PCD Φ220 (0°)
LOGO
UCAI (185°)
UCOI (160°)
CAI (155°)
OI (150°)
COI (105°)
AI (90°)
2 - (82°)
(90°)
LOGO

HDC120-BBT40

Direct Drive Motor Spindle

(With Central Tool Cooling Capacity)



Characteristics & Dimensions

MODEL	HDC120
Specification	*BBT40 - Ø120*
Maximum Spindle Speed *(r.p.m.)*	*12,000 R.P.M.*
Bearings Specification	*7012 x 2 | 7012 x 2*
Bearings Type	*Large Ceramic Balls*
Lubrication Type	*By Grease*
Bearing Temparature Rise	*+ 20.00° C*
Position	*Motor Built-In*
Device Coolong Media	*By Oil*
Taper Runout	*0.002 mm*
Balance Grade	*G1*
Total Device Weight *(Kg)*	*40.00*

**** Taper Runout Precission ≤ 0.003 mm.*
**** All dimensions are given in millimeters.*

HDC120-BBT40

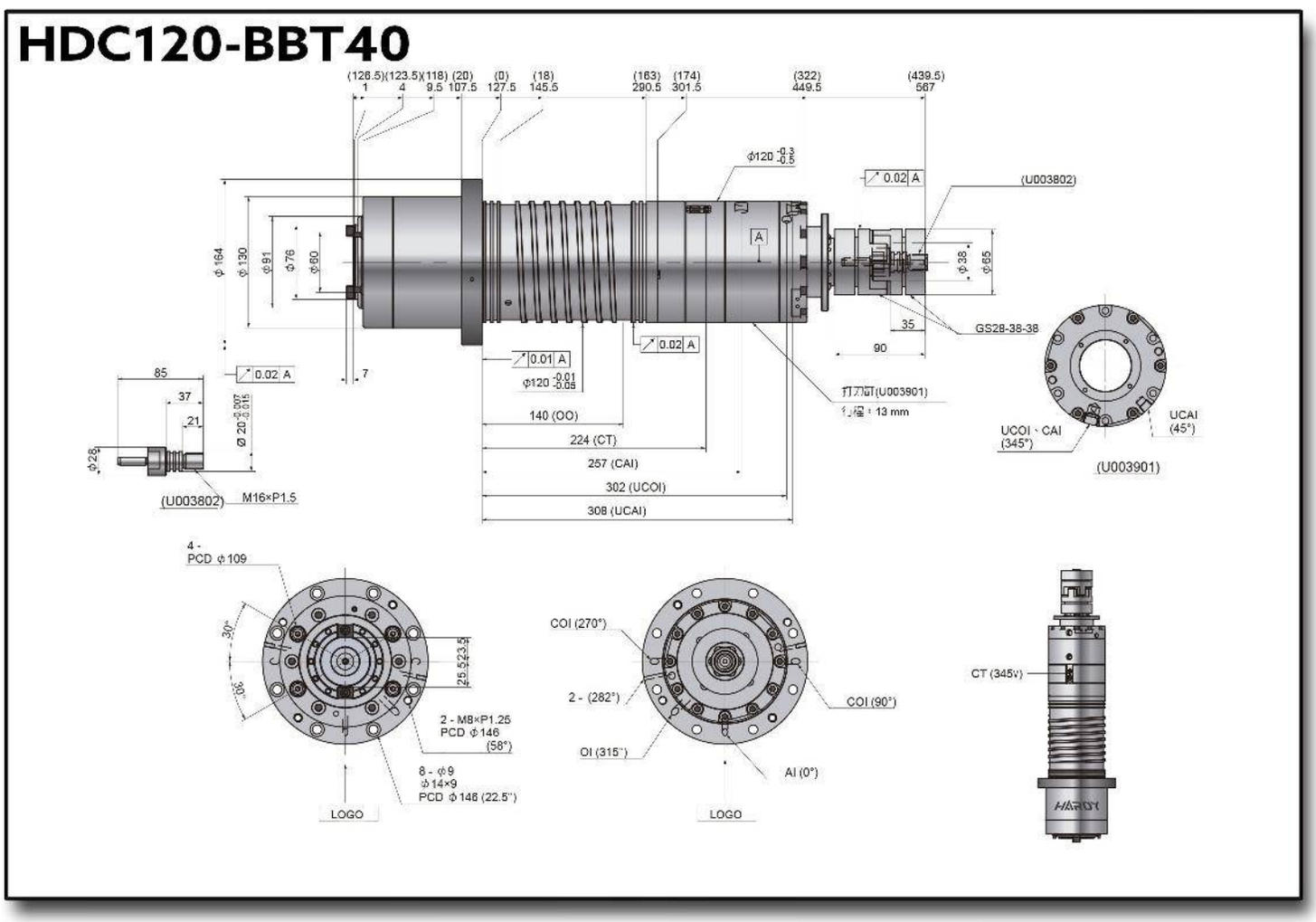

HDT150-A_2-4

Belt Driven
CNC Lathe Spindle



Characteristics & Dimensions

MODEL	HDT-150
Spindle Nose	A_2-4
Housin Outside Diameter *(OD)*	150.00
Maximum Spindle Speed *(r.p.m.)*	6000.00
Through Hole	Ø45
Fron Bearing	7014 x 2 Ø70
Rear Bearing	7014 x 2 Ø70
Lubrication	Grasa
Spindle Pulley	5GT-60T
Encoder Pulley	5GT-54T
Rising Temperature	≤ 20.00° C
Balancing	ISO 1940 G1
Device Accuracy	2.000 µm
Total Device Weight *(Kg)*	46.00

*** Taper Runout Precission ≤ 0.003 mm.
*** All dimensions are given in millimeters.

HDT150-A$_2$-4

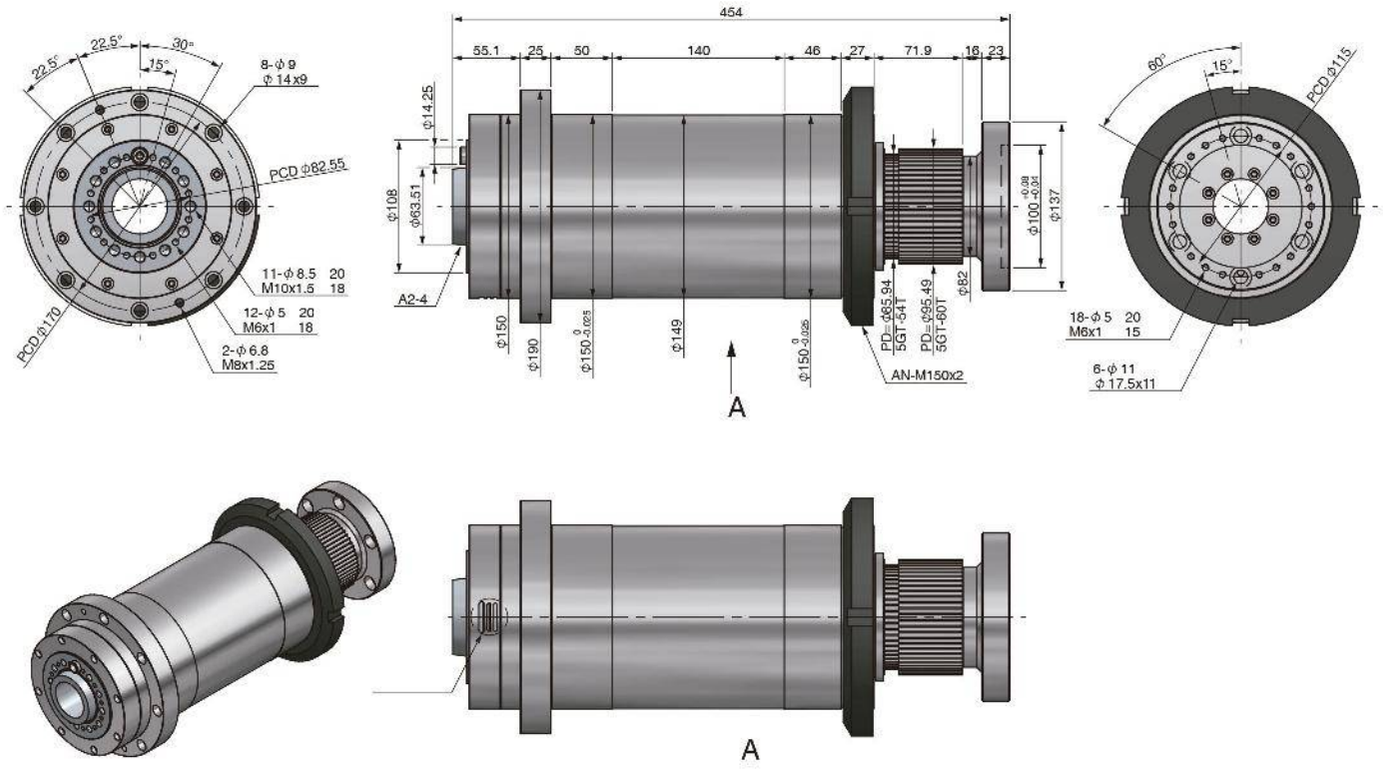
454
55.1
25
50
140
46
27
71.9
16
23
22.5°
22.5°
30°
15°
8-φ 9
φ 14x9
PCD φ82.55
11-φ 8.5 20
M10x1.5 18
12-φ 5 20
M6x1 18
2-φ 6.8
M8x1.25
PCD φ170
φ14.25
φ108
φ63.51
A2-4
φ150
φ190
φ150 0 -0.025
φ149
φ150 0 -0.025
PD=φ65.94
5GT-64T
PD=φ95.49
5GT-60T
φ82
φ100 -0.09 -0.24
φ137
AN-M150x2
A
60°
15°
PCD φ115
18-φ 5 20
M6x1 15
6-φ 11
φ 17.5x11
A

HDT170-A$_2$-5

Belt Driven Spindle



Characteristics & Dimensions

MODEL	HDT-170
Spindle Nose	*A2-5*
Housin Outside Diameter *(OD)*	*170.00*
Maximum Spindle Speed *(r.p.m.)*	*5,000.00*
Through Hole	*Ø56*
Fron Bearing	*7018 x 3 Ø90*
Rear Bearing	*7016 x 2 80*
Lubrication	*Grasa*
Spindle Pulley	*8YU-44T*
Encoder Pulley	*HDT 8M-40T*
Rising Temperature	*≤ 20.00° C*
Balancing	*ISO 1940 G1*
Device Accuracy	*2.000 µm*
Total Device Weight *(Kg)*	*61.00*

**** Taper Runout Precission ≤ 0.003 mm.*
**** All dimensions are given in millimeters.*

HDT170-A$_2$-5

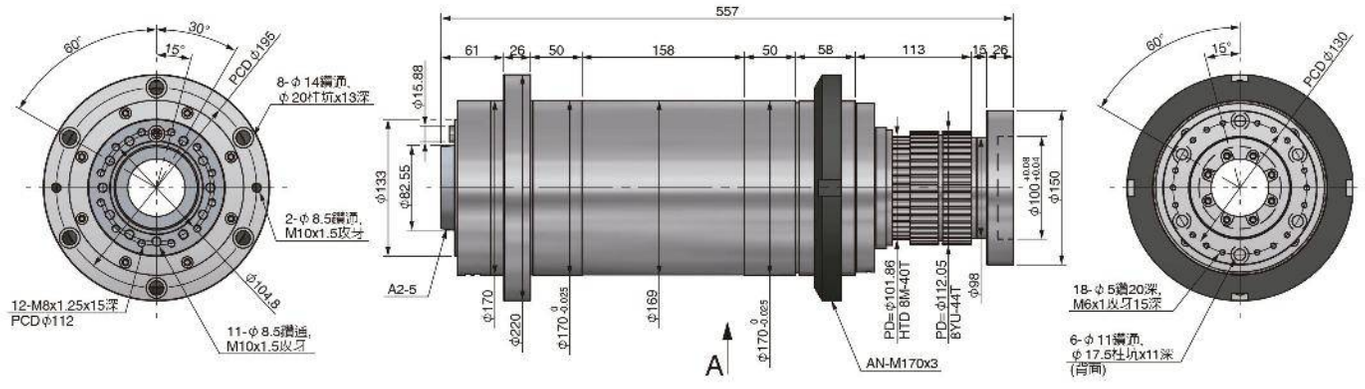





視圖A

HDT200-A_2-60

Bel Driven Spindle



Characteristics & Dimensions

MODEL	HDT-200
Spindle Nose	*A_2-6*
Housin Outside Diameter *(OD)*	*200.00*
Maximum Spindle Speed *(r.p.m.)*	*4,000.00*
Through Hole	*Ø62*
Fron Bearing	*NN3020 + BTM100*
Rear Bearing	*NN3018*
Lubrication	*Grasa*
Spindle Pulley	*3V-7*
Encoder Pulley	*5GT-72T*
Rising Temperature	*≤ 20.00° C*
Balancing	*ISO 1940 G1*
Device Accuracy	*2.000 µm*
Total Device Weight *(Kg)*	*95.00*

**** Taper Runout Precission ≤ 0.003 mm.*
**** All dimensions are given in millimeters.*

HDT200-A_2-6

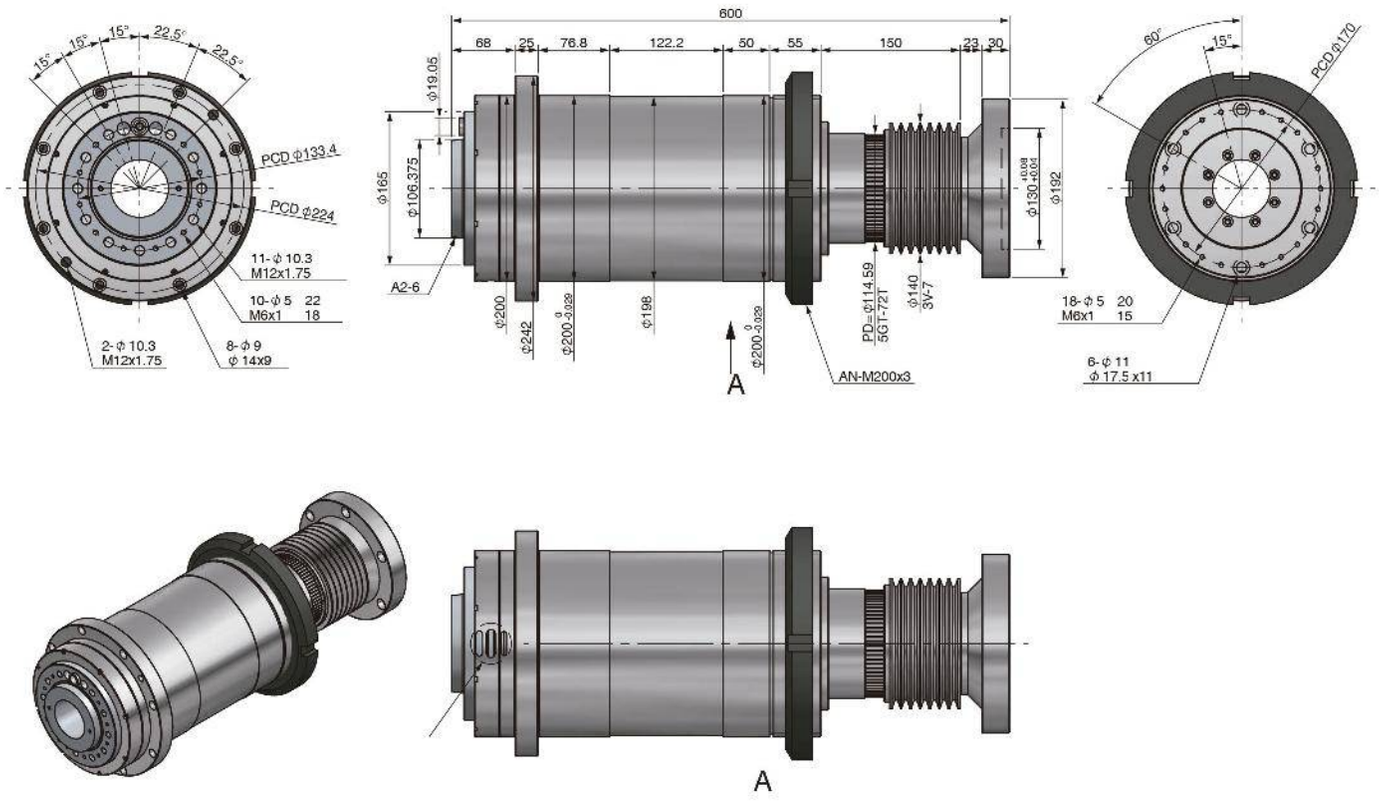
600
68
25
76.8
122.2
50
55
150
23
30
15°
15°
15°
22.5°
22.5°
PCD Φ133.4
PCD Φ224
11- Φ 10.3
M12x1.75
10- Φ 5 22
M6x1 18
2- Φ 10.3
M12x1.75
8- Φ 9
Φ 14x9
Φ19.05
Φ165
Φ106.375
A2-6
Φ200
Φ242
Φ200 -0.029
Φ198
Φ200 -0.029
A
PD=Φ114.59
5GT-72T
Φ140
3V-7
AN-M200x3
Φ130 +0.04 +0.03
Φ192
60°
15°
PCD Φ170
18- Φ 5 20
M6x1 15
6- Φ 11
Φ 17.5 x11
A

HE170-BBT40

Self Driven Spindle



Characteristics & Dimensions

MODEL	HE170
Specification	*BBT40 - Ø170*
Maximum Spindle Speed *(r.p.m.)*	*18,000 R.P.M.*
Bearings Specification	*7914 x 3 | 7912 x 2*
Bearings Type	*Small Ceramic Balls*
Lubrication Type	*Grease*
Bearing Temparature Rise	*+ 20.00° C*
Position	*(By Encoder)(FANUC A860-2150-V001)*
Device Coolong Media	*By Oil*
Taper Runout	*0.002 mm*
Balance Grade	*G1*
Total Device Weight *(Kg)*	*85.00*

**** Taper Runout Precission ≤ 0.003 mm.*
**** All dimensions are given in millimeters.*

HE170-BBT40

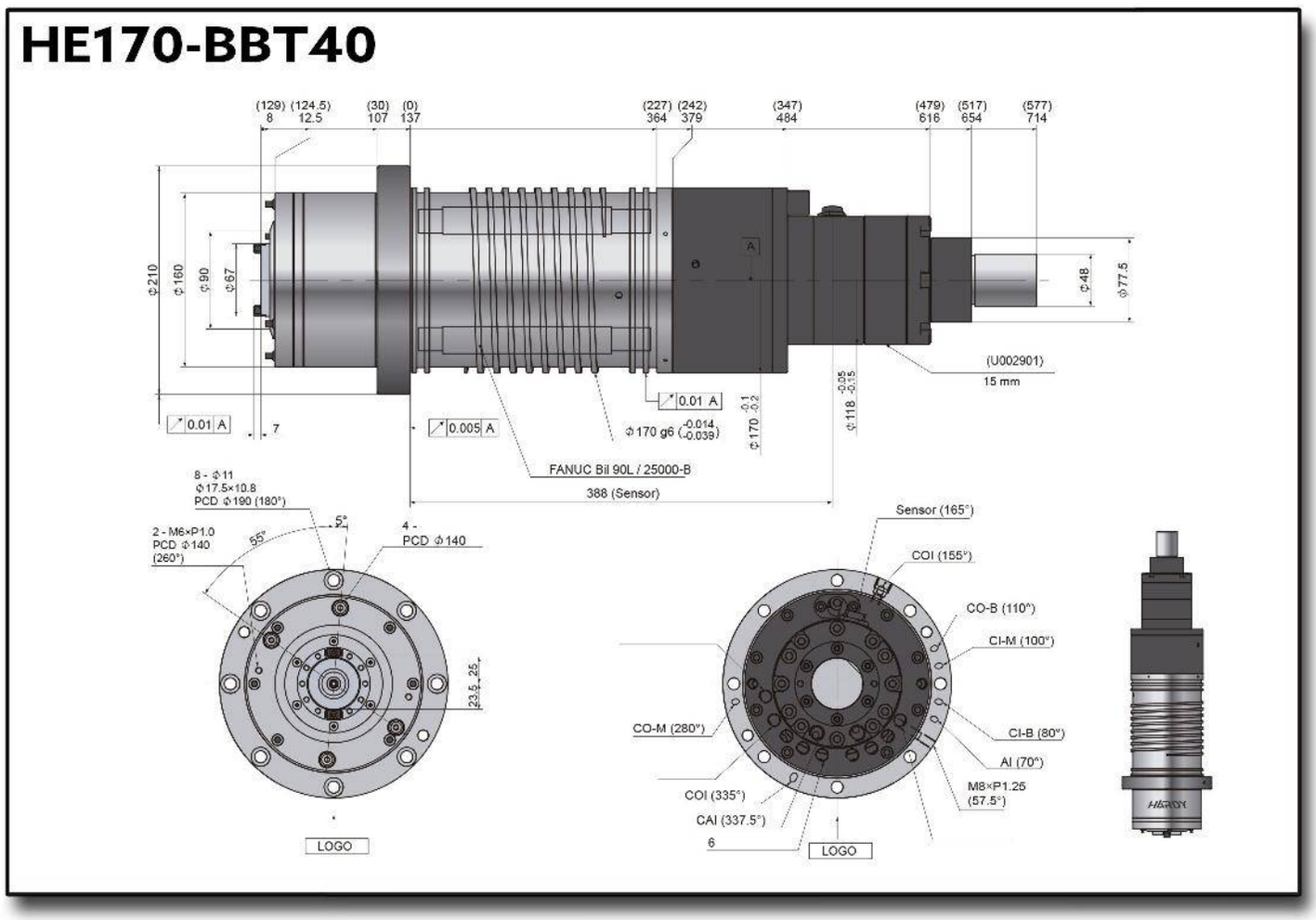
(129) 8
(124.5) 12.5
(30) 107
(0) 137
(227) 364
(242) 379
(347) 484
(479) 616
(517) 654
(577) 714
Φ210
Φ160
Φ90
Φ67
Φ48
Φ77.5
A
(U002901)
15 mm
0.01 A
7
0.005 A
Φ170 g6 -0.014 -0.039
Φ170 -0.1 -0.2
Φ118 -0.05 -0.15
FANUC Bil 90L / 25000-B
388 (Sensor)
8 - Φ11
Φ17.5×10.8
PCD Φ190 (180°)
2 - M6×P1.0
PCD Φ140
(260°)
55°
5°
4 -
PCD Φ140
23.5
25
LOGO
Sensor (165°)
COI (155°)
CO-B (110°)
CI-M (100°)
CO-M (280°)
CI-B (80°)
AI (70°)
M8×P1.25
(57.5°)
COI (335°)
CAI (337.5°)
6
LOGO

HE170-HSKE50

Self Driven Spindle



Characteristics & Dimensions

MODEL	HE-170
Specification	*HSKE50 - Ø170*
Maximum Spindle Speed *(r.p.m.)*	*30,000 R.P.M.*
Bearings Specification	*7011 x 2 | 7008 x 2*
Bearings Type	*Small Ceramic Balls*
Lubrication Type	*Oil Air Mist System*
Bearing Temparature Rise	*+ 20.00° C*
Position	*(By Encoder)(FANUC A860-2155-T311)*
Device Coolong Media	*By Oil*
Taper Runout	*0.002 mm*
Balance Grade	*G1*
Total Device Weight *(Kg)*	*80.00*

**** Taper Runout Precission ≤ 0.003 mm.*
**** All dimensions are given in millimeters.*

HE170-HSKE50

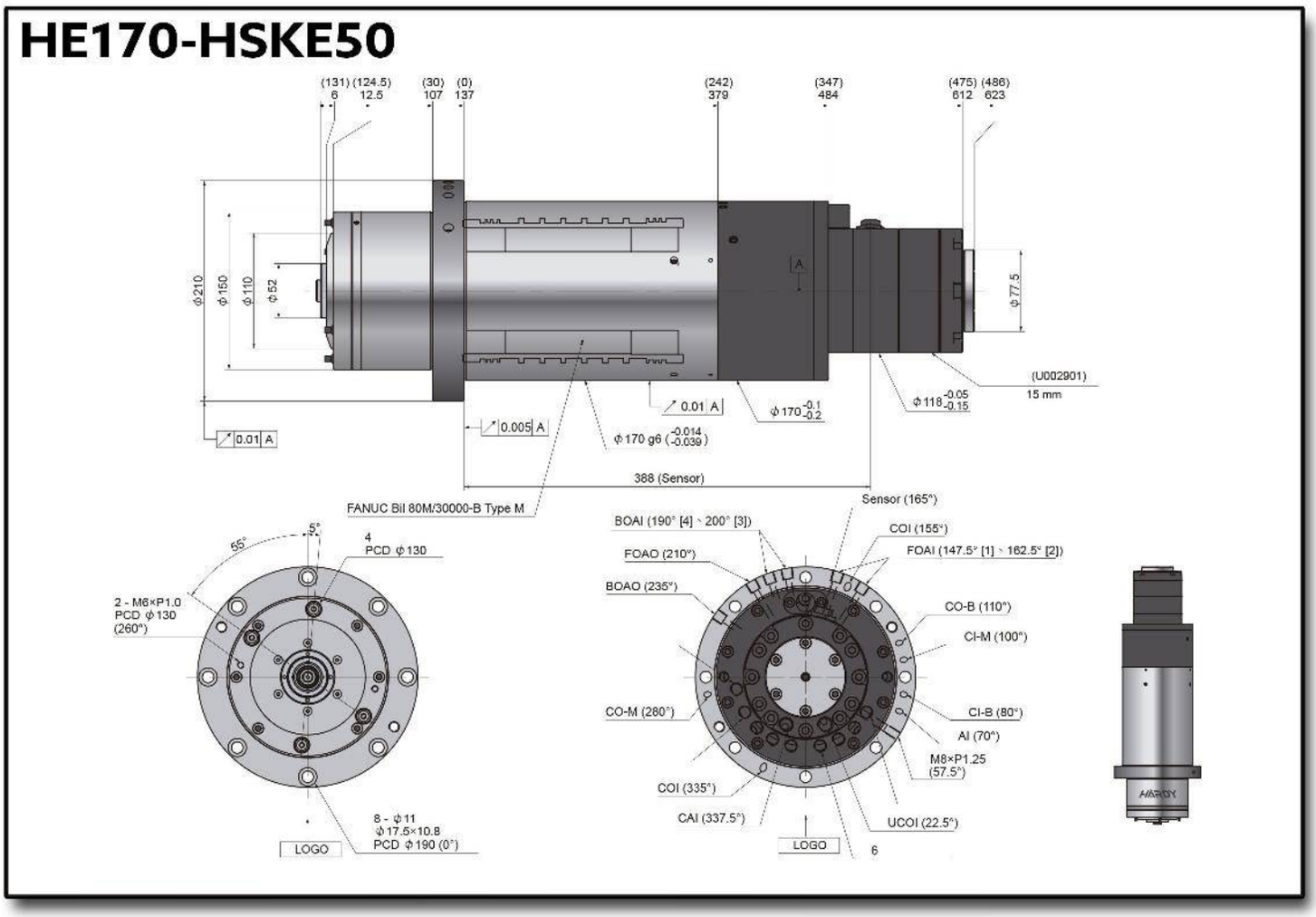

HG-170
Husillo Impulsado Por Banda Para Fresado/Esmerilado

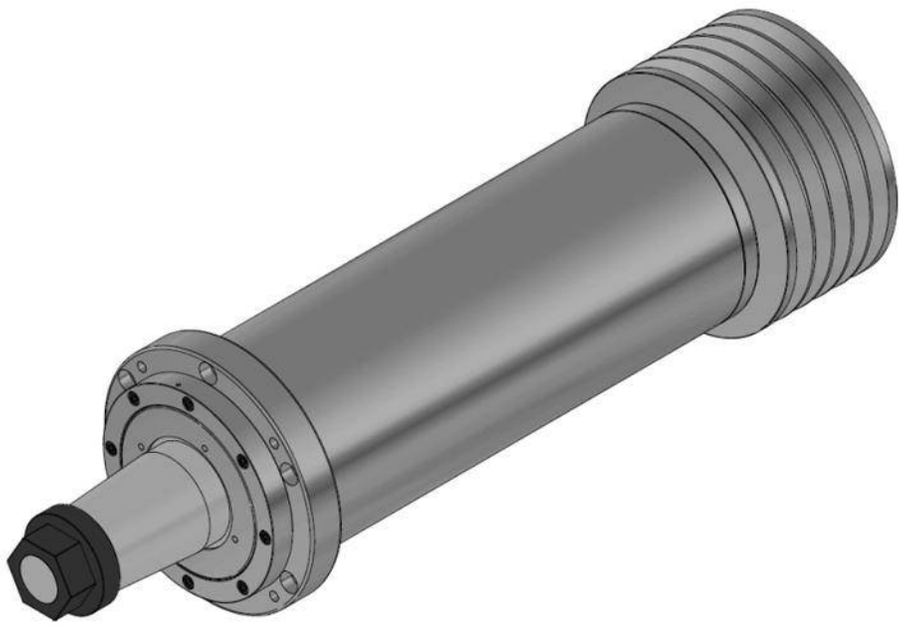

Characteristics & Dimensions

MODELO	HG-170
Specification	*Ø170*
Maximum Spindle Speed *(r.p.m.)*	*1450.00*
Bearings Specification	*7018 x 4 | NN3018K x 1*
Bearings Type	*Large Steel Balls | Roller*
Lubrication Type	*Grease*
Bearing Temparature Rise	*+ 15.00° C*
Taper Runout	*0.002*
Balance Grade	*G1*
AI *(Air Flow Connection)*	*PT 1/8" - 02166*
Air Pressure Working Range *(Kg/cm²)*	*1.00 ~ 1.50*
Total Device Weight *(Kg)*	*106.00*

**** Taper Runout Precission ≤ 0.003 mm.*
**** All dimensions are given in millimeters.*

HG-170

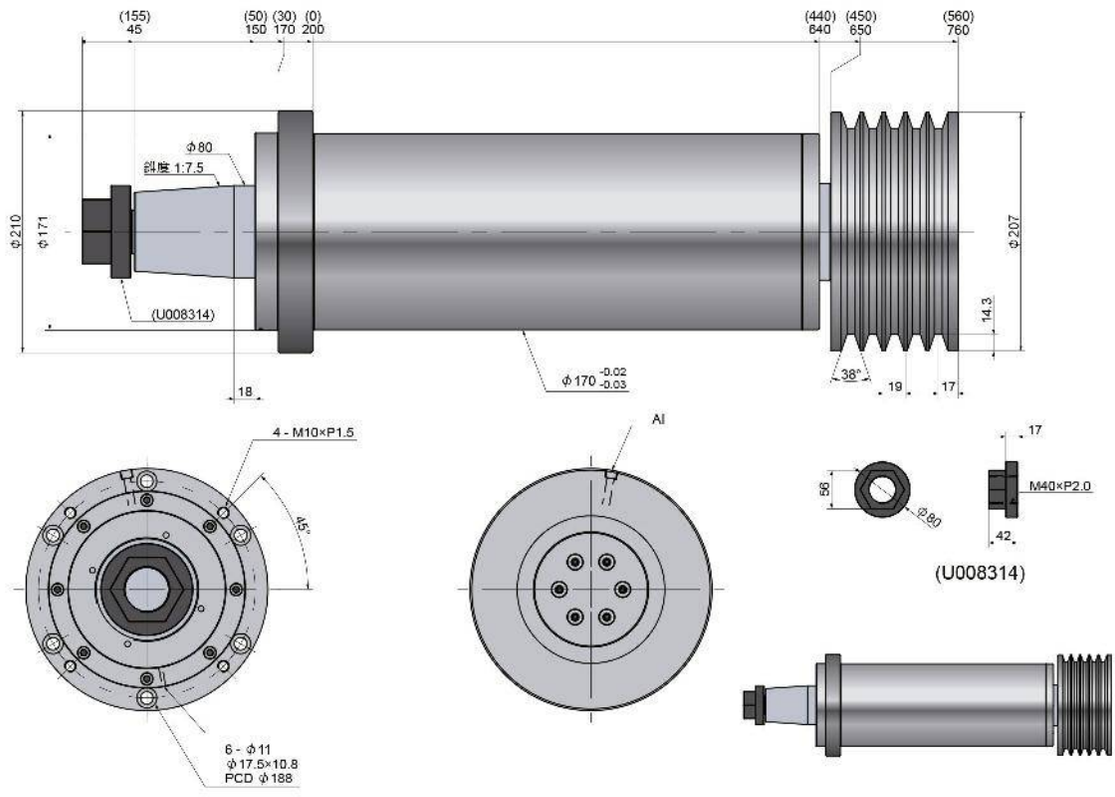
(155)
45
(50) (30) (0)
150 170 200
(440) (450)
640 650
(560)
760
Φ80
錐度 1:7.5
Φ210
Φ171
(U008314)
18
Φ170 -0.02 -0.03
Φ207
14.3
38°
19
17
4 - M10×P1.5
45°
6 - Φ11
Φ17.5×10.8
PCD Φ188
Al
17
56
Φ80
M40×P2.0
42
(U008314)

HCT SERIES

HYDRAULIC INDEXING TABLES WITH HYDRAULIC GEAR COUPLING

HCT-200
Hydraulic Indexing Tables

Three pieces of Hirth coupling gears are built inside positioning and indexing, there is no floating action during degree indexing.

Wholeclosed structure design has high rigidity and gripping force increase the efficiency greatly during heavy duty cutting.





Characteristics & Dimensions

MODEL	HCT-200
Table Dimensions	*Ø 200.00*
Cylinder Center	*Ø 36.00 H6*
Cylinder Center Depth	*30.00*
Center Hole Diameter (Through Device)	*Ø 27.00*
Total Height	*175.00*
Hydraulic Pressure (Kg/cm²)	*30.00 Kg/cm²*
Indexing Accuracy (Accumulative) (arc/sec)	*4" arc sec*
Repeatability (arc/sec)	*±1" arc sec*
Number Of Indexing Positions (Standard)	*4 / 6 / 8 / 12 / 24 (One To Be Selected)*
Number Of Indexing Positions (Special)	*2 / 3 / 5 / 9... (One To Be Selected Under Special Order)*
Table Turning Direction	*CW - Clock Wise* *CCW - Counter Clock Wise*
Indexing Time *(90° Turn)*	*2.00 Seconds*

** All dimensions are given in millimeters.
*** 90°, 30 Kg/cm², 2 H.P., 30 L/min
**** Indexing time for a 90° turn (Release, Rotate, Block, Grip), under this parameters 30 Kg/cm², 2 H.P., 30 L/min, etc....

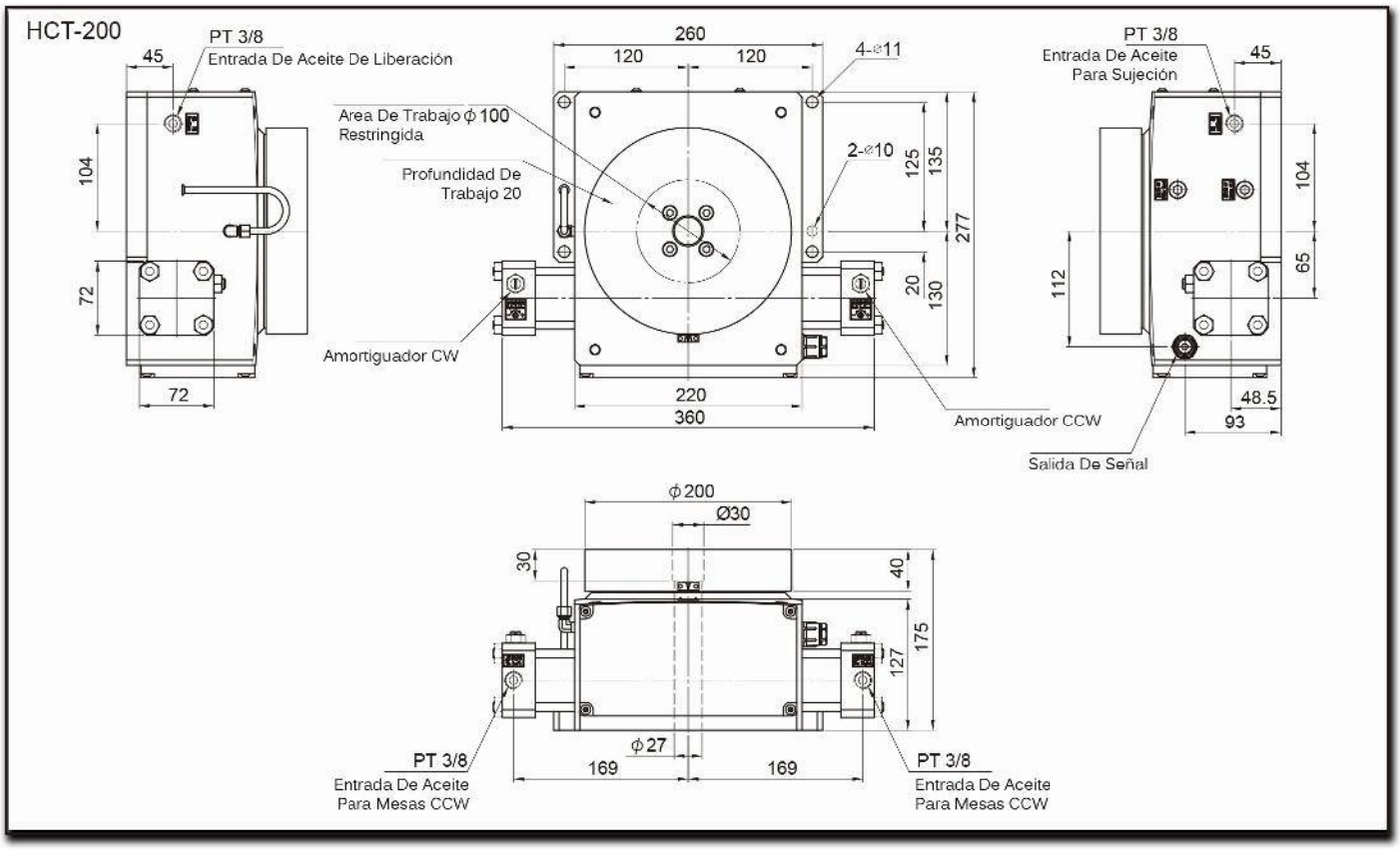
HCT-200
PT 3/8
Entrada De Aceite De Liberación
45
104
72
72
260
120
120
4-⌀11
Area De Trabajo ϕ100
Restringida
Profundidad De
Trabajo 20
2-⌀10
125
135
277
20
130
Amortiguador CW
220
360
Amortiguador CCW
PT 3/8
Entrada De Aceite
Para Sujeción
45
104
65
112
48.5
93
Salida De Señal
ϕ200
Ø30
30
40
175
127
ϕ27
169
169
PT 3/8
Entrada De Aceite
Para Mesas CCW
PT 3/8
Entrada De Aceite
Para Mesas CCW

Characteristics & Dimensions

MODEL		HCT-200
Instant Permissible Inertia GD^2		*7.00 Kg/cm²*
Rotating Torque		*25.00 Kg-m*
Gripping Torque	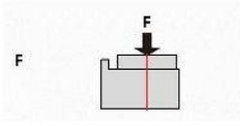	*1,260.00 Kg* *12,340.00 N*
	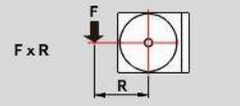	*108.00 Kg-m* *1,060.00 N-m*
	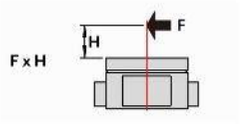	*55.00 Kg-m* *541.00 N-m*
Total Load Capacity	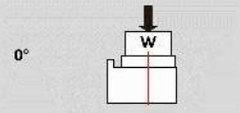	*120.00 Kg.*
Device Net Weight		*46.00 Kg.*

*** All dimensions are given in millimeters.*
**** 90°, 30 Kg/cm², 2 H.P., 30 L/min*
***** Indexing time for a 90° turn (Release, Rotate, Block, Grip), under this parameters 30 Kg/cm², 2 H.P., 30 L/min, etc....*

HCT-340
Hydraulic Indexing Tables

Three pieces of Hirth coupling gears are built inside positioning and indexing, there is no floating action during degree indexing.

Wholeclosed structure design has high rigidity and gripping force increase the efficiency greatly during heavy duty cutting.





Characteristics & Dimensions

MODEL	HCT-340
Table Dimensions	*Ø 340.00*
Cylinder Center	*Ø 65.00 H6*
Cylinder Center Depth	*11.00*
Center Hole Diameter (Through Device)	*Ø 30.50*
Total Height	*210.00*
Hydraulic Pressure (Kg/cm²)	*30.00 Kg/cm²*
Indexing Accuracy (Accumulative) (arc/sec)	*4" arc sec*
Repeatability (arc/sec)	*±1" arc sec*
Number Of Indexing Positions (Standard)	*4 / 6 / 8 / 12 / 24 (One To Be Selected)*
Number Of Indexing Positions (Special)	*2 / 3 / 5 / 9... (One To Be Selected Under Special Order)*
Table Turning Direction	*CW - Clock Wise* *CCW - Counter Clock Wise*
Indexing Time *(90° Turn)*	*2.50 Seconds*

*** All dimensions are given in millimeters.*
**** 90°, 30 Kg/cm², 2 H.P., 30 L/min*
***** Indexing time for a 90° turn (Release, Rotate, Block, Grip), under this parameters 30 Kg/cm², 2 H.P., 30 L/min, etc....*

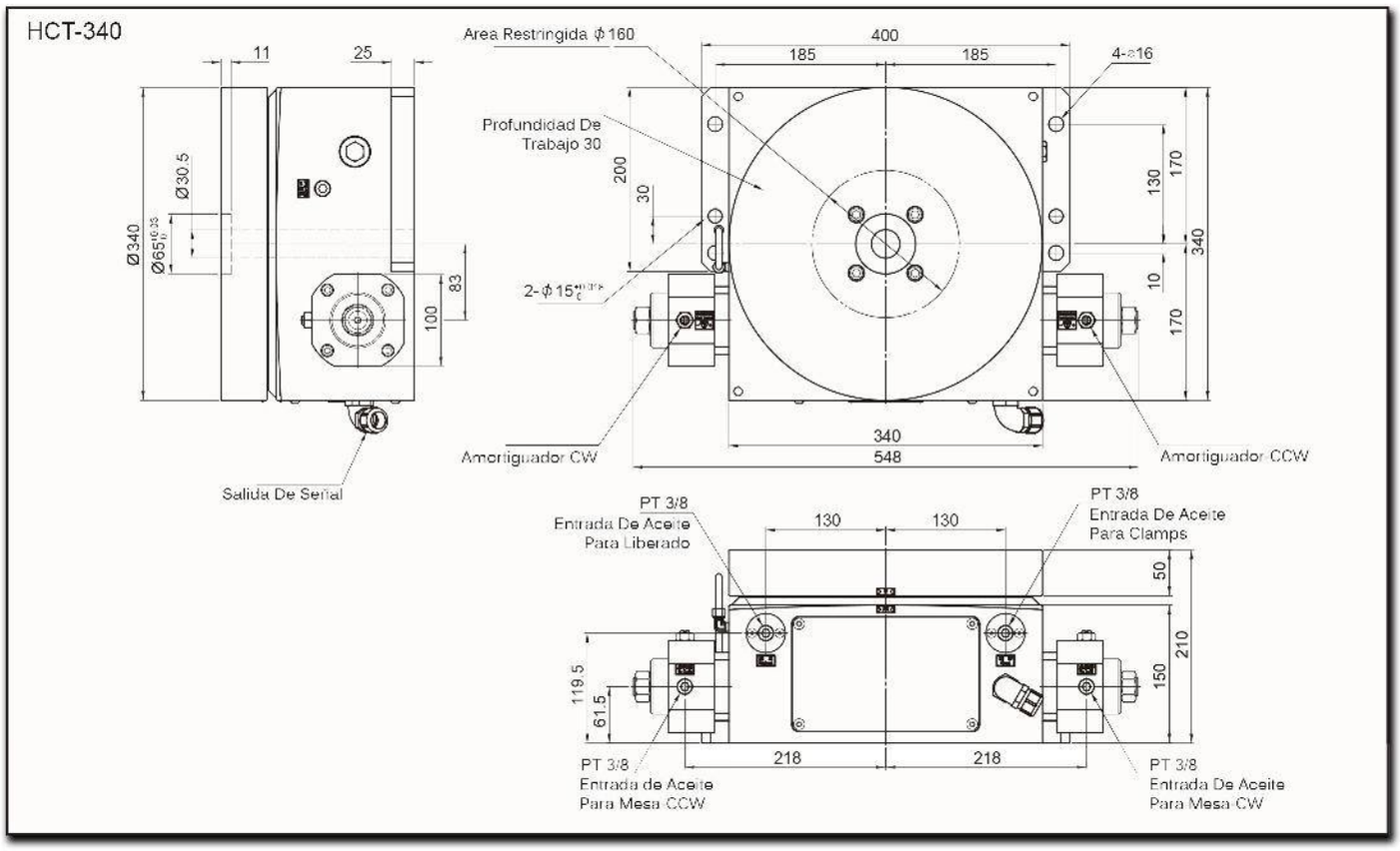
HCT-340
11
25
Ø340
Ø65
Ø30.5
83
100
Salida De Señal
Area Restringida ϕ160
400
185
185
4-ø16
Profundidad De
Trabajo 30
200
30
130
170
340
10
170
2-ϕ15
340
548
Amortiguador CW
Amortiguador CCW
PT 3/8
Entrada De Aceite
Para Liberado
130
130
PT 3/8
Entrada De Aceite
Para Clamps
50
210
150
119.5
61.5
218
218
PT 3/8
Entrada de Aceite
Para Mesa CCW
PT 3/8
Entrada De Aceite
Para Mesa CW

Characteristics & Dimensions

MODEL		HCT-340
Instant Permissible Inertia GD^2		*85.00 Kg/cm²*
Rotating Torque		*57.00 Kg-m*
Gripping Torque	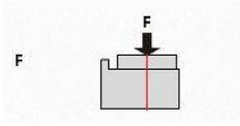	*1,560.00 Kg* *15,200.00 N*
	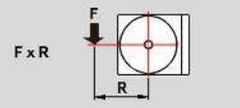	*332.00 Kg-m* *3,250.00 N-m*
	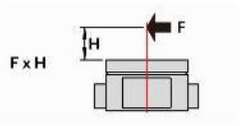	*145.00 Kg-m* *1,423.00 N-m*
Total Load Capacity	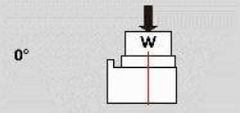	*500.00 Kg.*
Device Net Weight		*120.00 Kg.*

*** All dimensions are given in millimeters.*
**** 90°, 30 Kg/cm², 2 H.P., 30 L/min*
***** Indexing time for a 90° turn (Release, Rotate, Block, Grip), under this parameters 30 Kg/cm², 2 H.P., 30 L/min, etc....*

HCT-470
Hydraulic Indexing Tables

Three pieces of Hirth coupling gears are built inside positioning and indexing, there is no floating action during degree indexing.

Wholeclosed structure design has high rigidity and gripping force increase the efficiency greatly during heavy duty cutting.



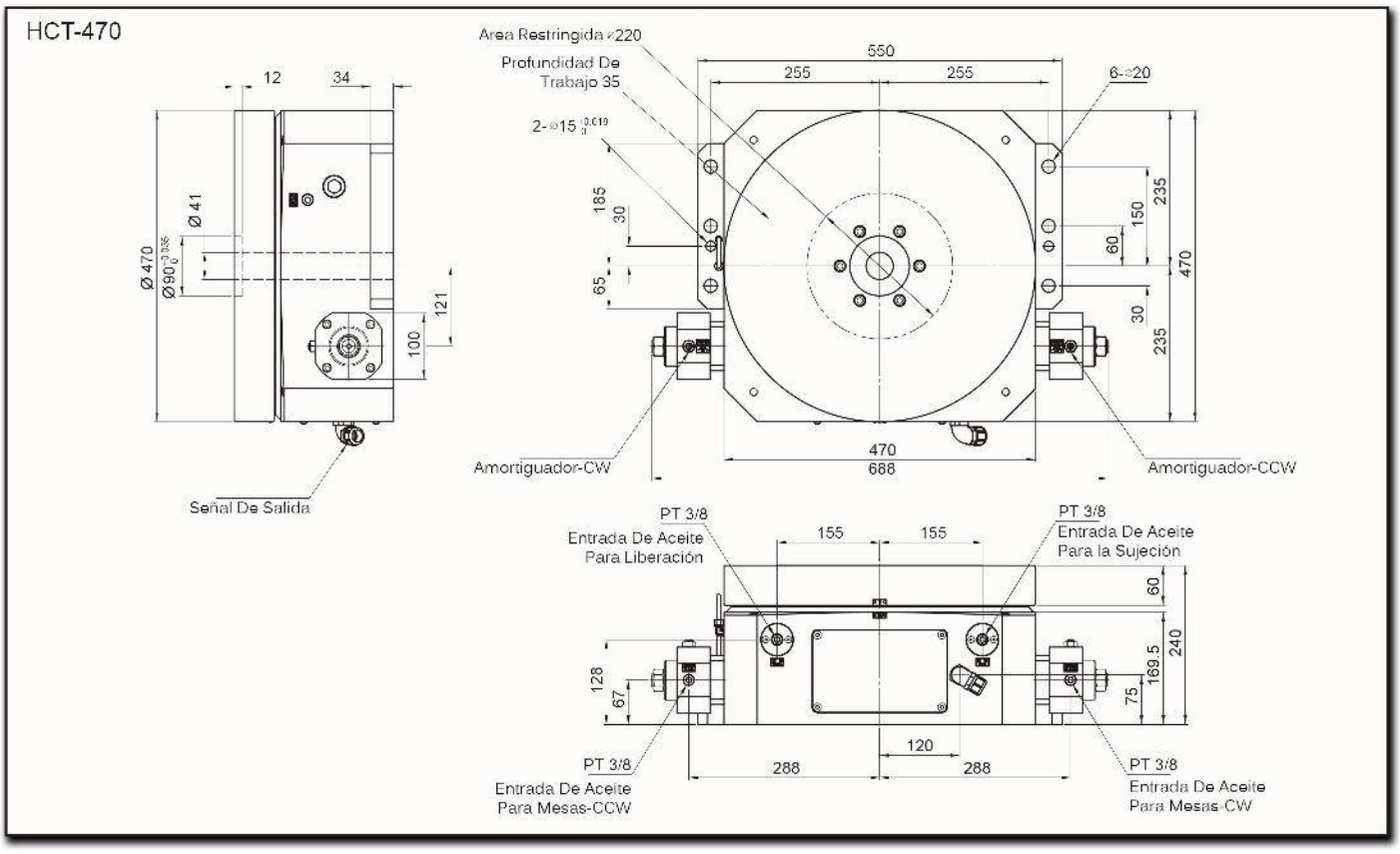
HCT-470
12
34
Ø 41
Ø 470
Ø 90
121
100
Señal De Salida
Area Restringida ⌀220
Profundidad De Trabajo 35
2-⌀15
550
255
255
6-⌀20
185
30
65
235
150
60
470
30
235
470
688
Amortiguador-CW
Amortiguador-CCW
PT 3/8
Entrada De Aceite Para Liberación
155
155
PT 3/8
Entrada De Aceite Para la Sujeción
60
240
169.5
128
67
75
120
288
288
PT 3/8
Entrada De Aceite Para Mesas-CCW
PT 3/8
Entrada De Aceite Para Mesas-CW



Characteristics & Dimensions

MODEL	HCT-470
Table Dimensions	*Ø 470.00*
Cylinder Center	*Ø 90.00 H6*
Cylinder Center Depth	*11.00*
Center Hole Diameter (Through Device)	*Ø 41.00*
Total Height	*240.00*
Hydraulic Pressure (Kg/cm²)	*35.00 Kg/cm²*
Indexing Accuracy (Accumulative) (arc/sec)	*4" arc sec*
Repeatability (arc/sec)	*±1" arc sec*
Number Of Indexing Positions (Standard)	*4 / 6 / 8 / 12 / 24 (One To Be Selected)*
Number Of Indexing Positions (Special)	*2 / 3 / 5 / 9... (One To Be Selected Under Special Order)*
Table Turning Direction	*CW - Clock Wise* *CCW - Counter Clock Wise*
Indexing Time *(90° Turn)*	*3.50 Seconds*

** All dimensions are given in millimeters.
*** 90°, 30 Kg/cm², 2 H.P., 30 L/min
**** Indexing time for a 90° turn (Release, Rotate, Block, Grip), under this parameters 30 Kg/cm², 2 H.P., 30 L/min, etc....

Characteristics & Dimensions

MODEL		HCT-470
Instant Permissible Inertia GD^2		*180.00 Kg/cm²*
Rotating Torque		*86.00 Kg-m*
Gripping Torque	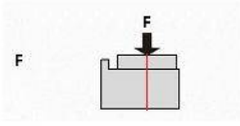	*3,970.00 Kg* *38,500.00 N*
	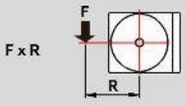	*1,428.00 Kg-m* *13,390.00 N-m*
	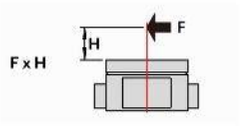	*550.00 Kg-m* *5,390.00 N-m*
Total Load Capacity	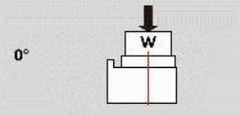	*700.00 Kg.*
Device Net Weight		*266.00 Kg.*

*** All dimensions are given in millimeters.*
**** 90°, 30 Kg/cm², 2 H.P., 30 L/min*
***** Indexing time for a 90° turn (Release, Rotate, Block, Grip), under this parameters 30 Kg/cm², 2 H.P., 30 L/min, etc....*

HCT-600
Hydraulic Indexing Tables

Three pieces of Hirth coupling gears are built inside positioning and indexing, there is no floating action during degree indexing.

Wholeclosed structure design has high rigidity and gripping force increase the efficiency greatly during heavy duty cutting.





Characteristics & Dimensions

MODEL	HCT-600
Table Dimensions	*Ø 600.00*
Cylinder Center	*Ø 110.00 H6*
Cylinder Center Depth	*11.00*
Center Hole Diameter (Through Device)	*Ø 53.00*
Total Height	*260.00*
Hydraulic Pressure (Kg/cm²)	*35.00 Kg/cm²*
Indexing Accuracy (Accumulative) (arc/sec)	*4" arc sec*
Repeatability (arc/sec)	*±1" arc sec*
Number Of Indexing Positions (Standard)	*4 / 6 / 8 / 12 / 24 (One To Be Selected)*
Number Of Indexing Positions (Special)	*2 / 3 / 5 / 9... (One To Be Selected Under Special Order)*
Table Turning Direction	*CW - Clock Wise* *CCW - Counter Clock Wise*
Indexing Time *(90° Turn)*	*6.00 Seconds*

** All dimensions are given in millimeters.
*** 90°, 30 Kg/cm², 2 H.P., 30 L/min
**** Indexing time for a 90° turn (Release, Rotate, Block, Grip), under this parameters 30 Kg/cm², 2 H.P., 30 L/min, etc....

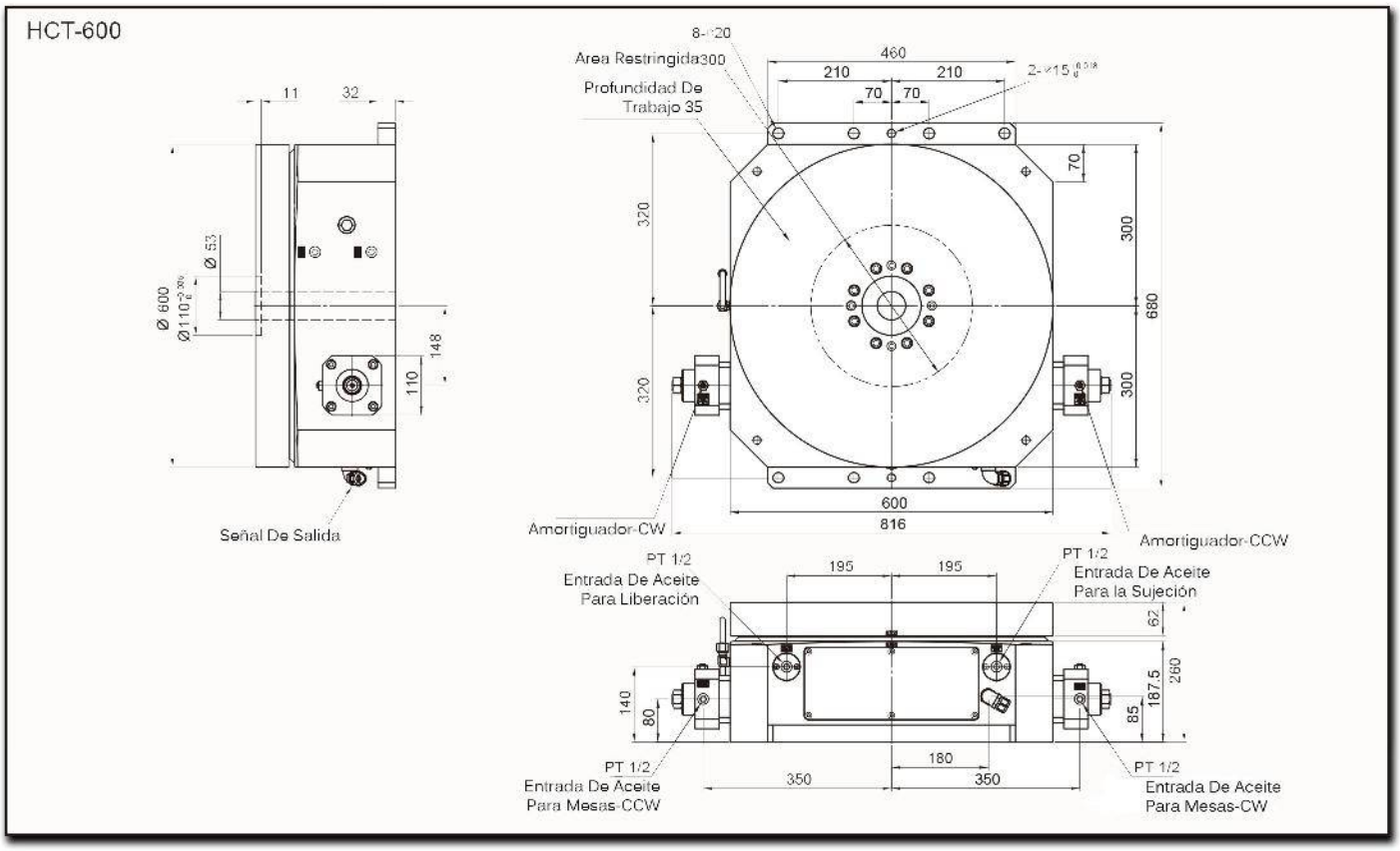
HCT-600
11
32
Ø 53
Ø 600
Ø110
148
110
Señal De Salida
8-
Area Restringida300
Profundidad De
Trabajo 35
460
210
210
70
70
2-
70
320
300
680
320
300
600
816
Amortiguador-CW
Amortiguador-CCW
PT 1/2
Entrada De Aceite
Para Liberación
195
195
PT 1/2
Entrada De Aceite
Para la Sujeción
62
260
187.5
85
140
80
180
350
350
PT 1/2
Entrada De Aceite
Para Mesas-CCW
PT 1/2
Entrada De Aceite
Para Mesas-CW

Characteristics & Dimensions

MODEL		HCT-600
Instant Permissible Inertia GD^2		*500.00 Kg/cm²*
Rotating Torque		*144.00 Kg-m*
Gripping Torque	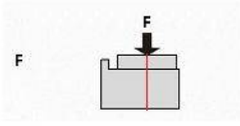	*6,448.00 Kg* *63,000.00 N*
	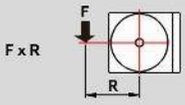	*1,980.00 Kg-m* *19,400.00 N-m*
	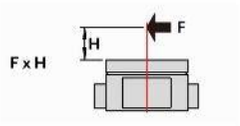	*840.00 Kg-m* *8,232.00 N-m*
Total Load Capacity	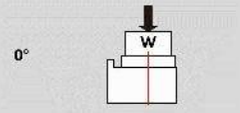	*1,250.00 Kg.*
Device Net Weight		*446.00 Kg.*

*** All dimensions are given in millimeters.*
**** 90°, 30 Kg/cm², 2 H.P., 30 L/min*
***** Indexing time for a 90° turn (Release, Rotate, Block, Grip), under this parameters 30 Kg/cm², 2 H.P., 30 L/min, etc....*

HCT-800
Hydraulic Indexing Tables

Three pieces of Hirth coupling gears are built inside positioning and indexing, there is no floating action during degree indexing.

Wholeclosed structure design has high rigidity and gripping force increase the efficiency greatly during heavy duty cutting.





Characteristics & Dimensions

MODEL	HCT-800
Table Dimensions	*Ø 800.00*
Cylinder Center	*Ø 120.00 H6*
Cylinder Center Depth	*40.00*
Center Hole Diameter (Through Device)	*Ø 53.00*
Total Height	*260.00*
Hydraulic Pressure (Kg/cm²)	*35.00 Kg/cm²*
Indexing Accuracy (Accumulative) (arc/sec)	*4" arc sec*
Repeatability (arc/sec)	*±1" arc sec*
Number Of Indexing Positions (Standard)	*4 / 6 / 8 / 12 / 24 (One To Be Selected)*
Number Of Indexing Positions (Special)	*2 / 3 / 5 / 9... (One To Be Selected Under Special Order)*
Table Turning Direction	*CW - Clock Wise* *CCW - Counter Clock Wise*
Indexing Time *(90° Turn)*	*6.00 Seconds*

*** All dimensions are given in millimeters.*
**** 90°, 30 Kg/cm², 2 H.P., 30 L/min*
***** Indexing time for a 90° turn (Release, Rotate, Block, Grip), under this parameters 30 Kg/cm², 2 H.P., 30 L/min, etc....*

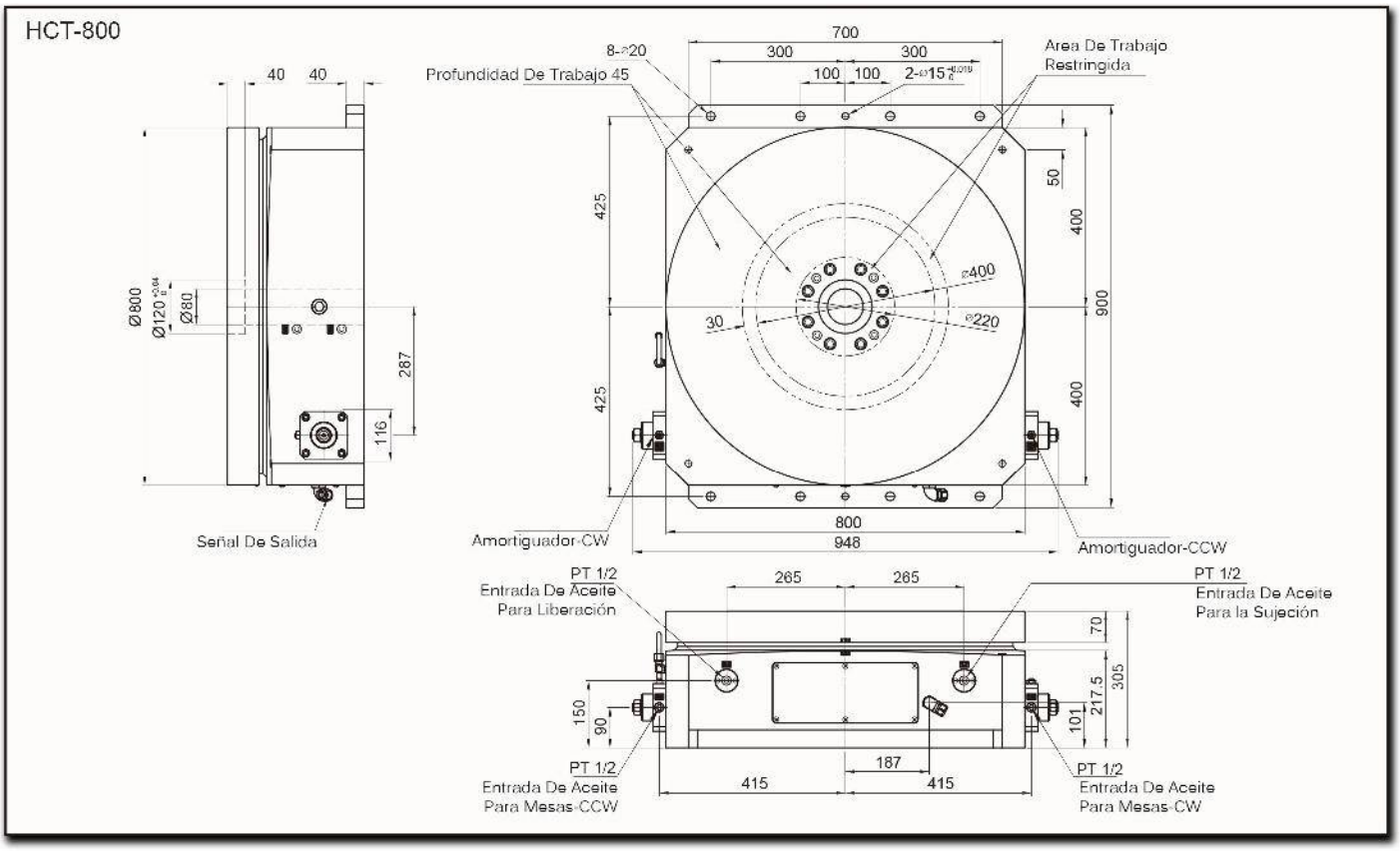
HCT-800
40
40
Ø800
Ø120
Ø80
287
116
Señal De Salida
700
300
300
100
100
2-Ø15
8-↗20
Profundidad De Trabajo 45
Area De Trabajo
Restringida
425
50
400
900
⌀400
30
⌀220
425
400
800
948
Amortiguador-CW
Amortiguador-CCW
PT 1/2
Entrada De Aceite
Para Liberación
265
265
PT 1/2
Entrada De Aceite
Para la Sujeción
70
305
217.5
150
90
101
187
415
415
PT 1/2
Entrada De Aceite
Para Mesas-CCW
PT 1/2
Entrada De Aceite
Para Mesas-CW

Characteristics & Dimensions

MODEL		HCT-800
Instant Permissible Inertia GD^2		*1,000.00 Kg/cm²*
Rotating Torque		*280.00 Kg-m*
Gripping Torque	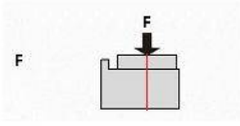	*9,600.00 Kg* *94,000.00 N*
	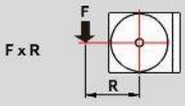	*4,000.00 Kg-m* *39,200.00 N-m*
	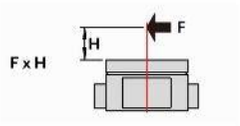	*1,950.00 Kg-m* *19,110.00 N-m*
Total Load Capacity	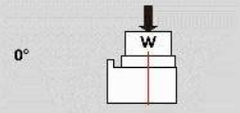	*2,400.00 Kg.*
Device Net Weight		*816.00 Kg.*

*** All dimensions are given in millimeters.*
**** 90°, 30 Kg/cm², 2 H.P., 30 L/min*
***** Indexing time for a 90° turn (Release, Rotate, Block, Grip), under this parameters 30 Kg/cm², 2 H.P., 30 L/min, etc....*

HCT-1000
Hydraulic Indexing Tables

Three pieces of Hirth coupling gears are built inside positioning and indexing, there is no floating action during degree indexing.

Wholeclosed structure design has high rigidity and gripping force increase the efficiency greatly during heavy duty cutting.





Characteristics & Dimensions

MODEL	HCT-1000
Table Dimensions	*Ø1,000.00*
Cylinder Center	*Ø120.00 H7*
Cylinder Center Depth	*60.00*
Center Hole Diameter (Through Device)	*Ø80.00*
Total Height	*325.00*
Hydraulic Pressure (Kg/cm²)	*35.00 Kg/cm²*
Indexing Accuracy (Accumulative) (arc/sec)	*4" arc sec*
Repeatability (arc/sec)	*±1" arc sec*
Number Of Indexing Positions (Standard)	*4 / 6 / 8 / 12 / 24 (One To Be Selected)*
Number Of Indexing Positions (Special)	*2 / 3 / 5 / 9... (One To Be Selected Under Special Order)*
Table Turning Direction	*CW - Clock Wise* *CCW - Counter Clock Wise*
Indexing Time *(90° Turn)*	*10.00 Seconds*

*** All dimensions are given in millimeters.*
**** 90°, 30 Kg/cm², 2 H.P., 30 L/min*
***** Indexing time for a 90° turn (Release, Rotate, Block, Grip), under this parameters 30 Kg/cm², 2 H.P., 30 L/min, etc....*

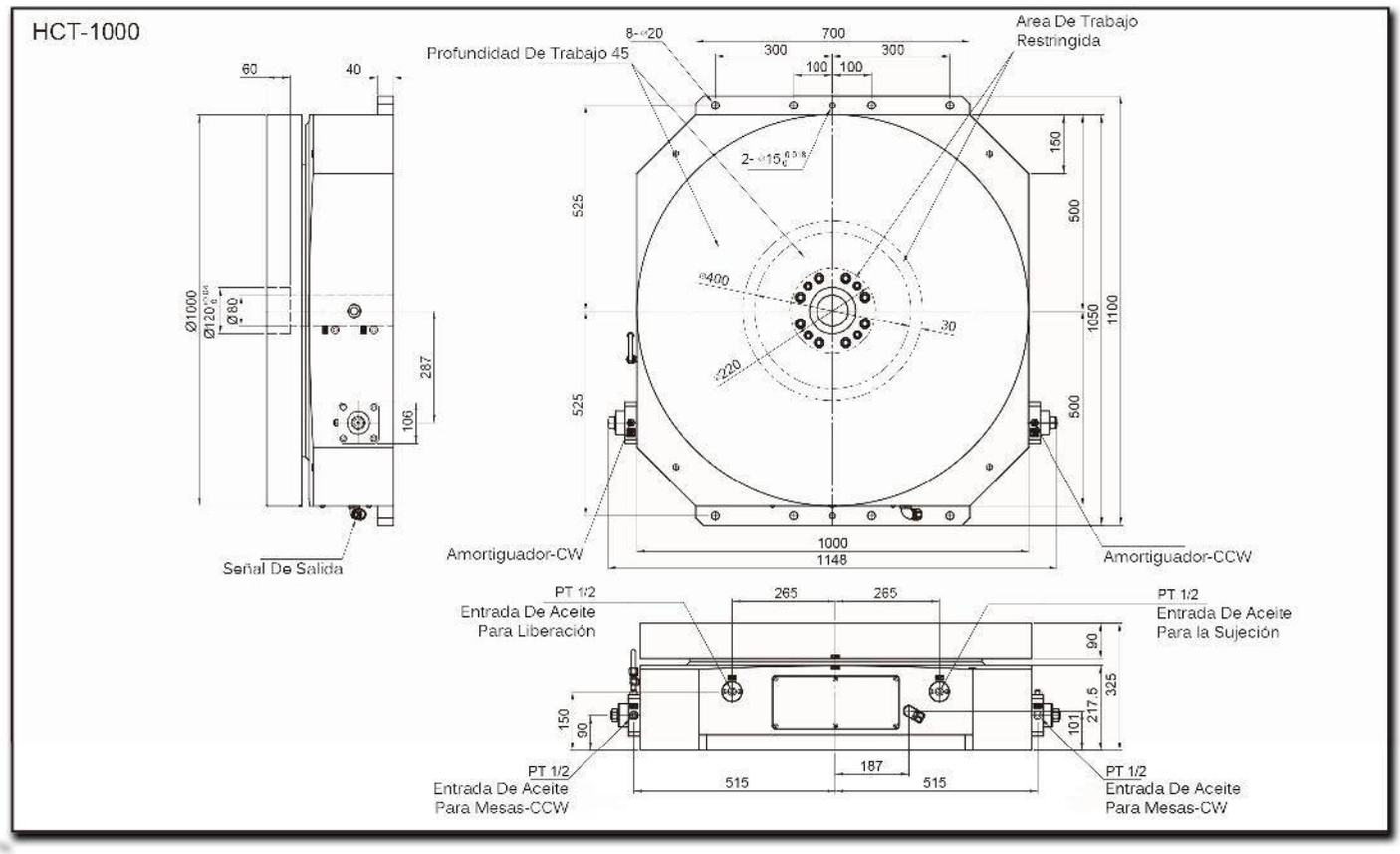
HCT-1000
Profundidad De Trabajo 45
8-⌀20
700
300
300
100
100
Area De Trabajo
Restringida
60
40
Ø1000
Ø120
Ø80
287
106
Señal De Salida
2- ⌀15
525
150
500
1050
1100
⌀400
30
220
525
500
Amortiguador-CW
1000
1148
Amortiguador-CCW
PT 1/2
Entrada De Aceite
Para Liberación
265
265
PT 1/2
Entrada De Aceite
Para la Sujeción
90
325
217.5
150
90
101
187
515
515
PT 1/2
Entrada De Aceite
Para Mesas-CCW
PT 1/2
Entrada De Aceite
Para Mesas-CW

Characteristics & Dimensions

MODEL		HCT-1000
Instant Permissible Inertia GD^2		*1,000.00 Kg/cm²*
Rotating Torque		*280 Kg-m*
Gripping Torque	F 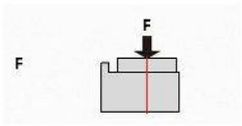	*9,600.00 Kg* *94,000.00 N*
	F x R 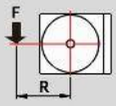	*4,000.00 Kg-m* *39,200.00 N-m*
	F x H 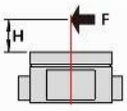	*1,900.00 Kg-m* *19,110.00 N-m*
Total Load Capacity	0° 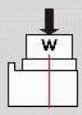	*2,400.00 Kg.*
Device Net weight		*1,500.00 Kg.*

*** All dimensions are given in millimeters.*
**** 90°, 30 Kg/cm², 2 H.P., 30 L/min*
***** Indexing time for a 90° turn (Release, Rotate, Block, Grip), under this parameters 30 Kg/cm², 2 H.P., 30 L/min, etc....*

HF SERIES

SQUARE BOX SLIDE PROFILE

HF-2040
Square Box Slide Profile

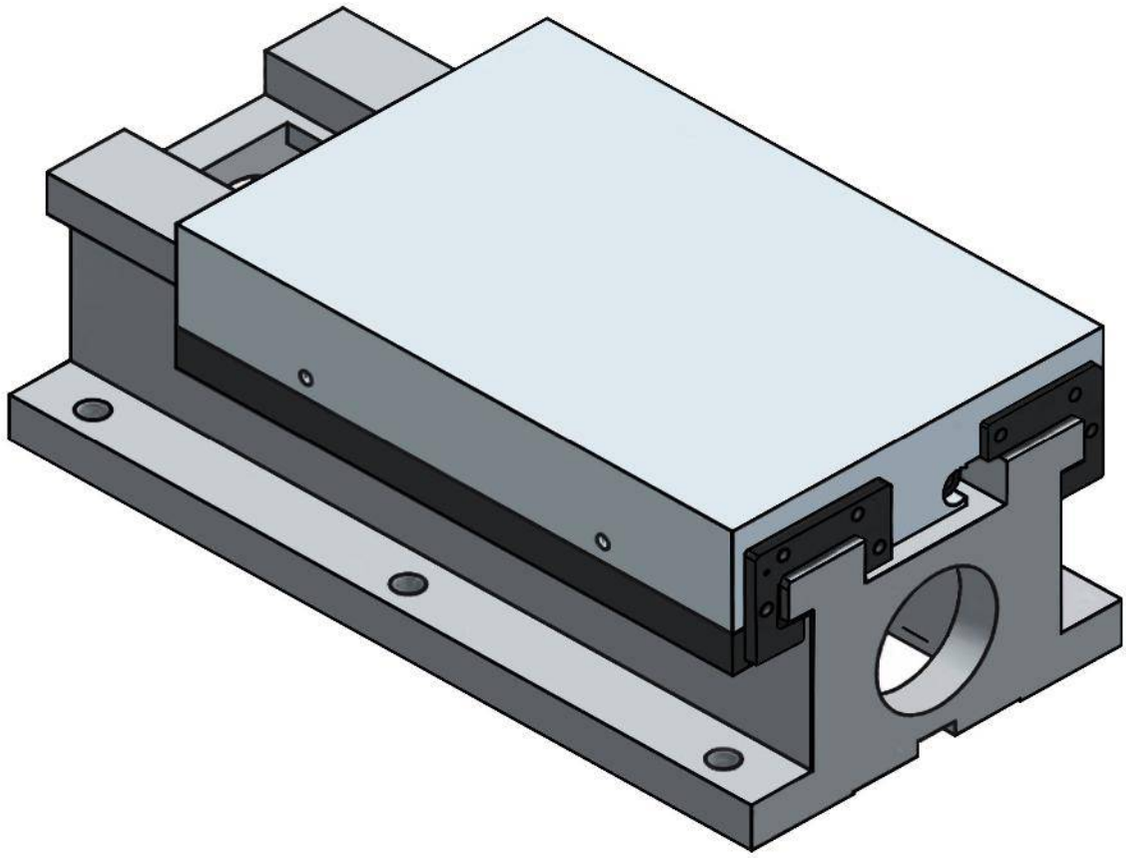

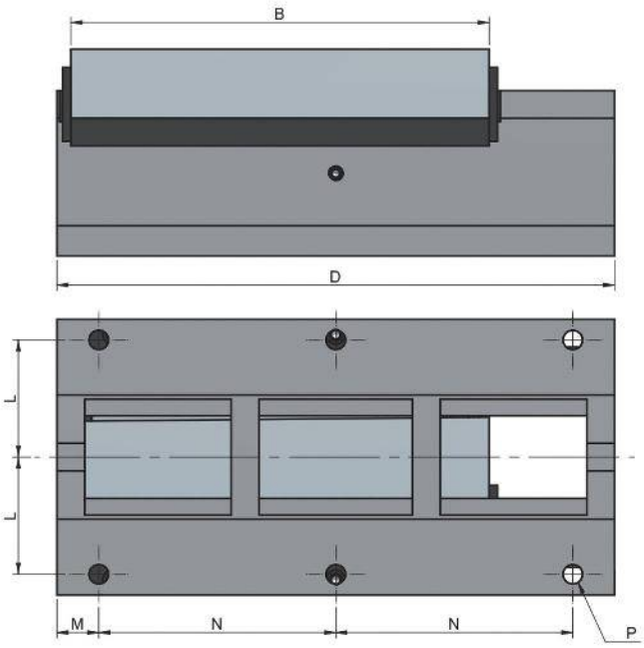

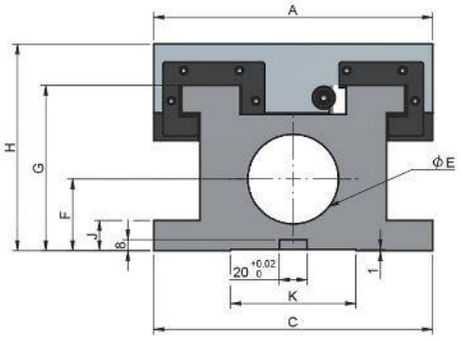

Characteristics & Dimensions

MODEL	HF-2040
A x B	*200.00 x 300.00*
C x D	*200.00 x 400.00*
E	*65.00*
F	*52.00*
G	*120.00*
H	*150.00*
J	*22.00*
K	*90.00*
L	*85.00*
M	*30.00*
N	*170.00*
P	*6.00 - Ø14*
Total Weight (Kg)	*45.00*

** All dimensions are given in millimeters.*

HF-2060

Square Box Slide Profile

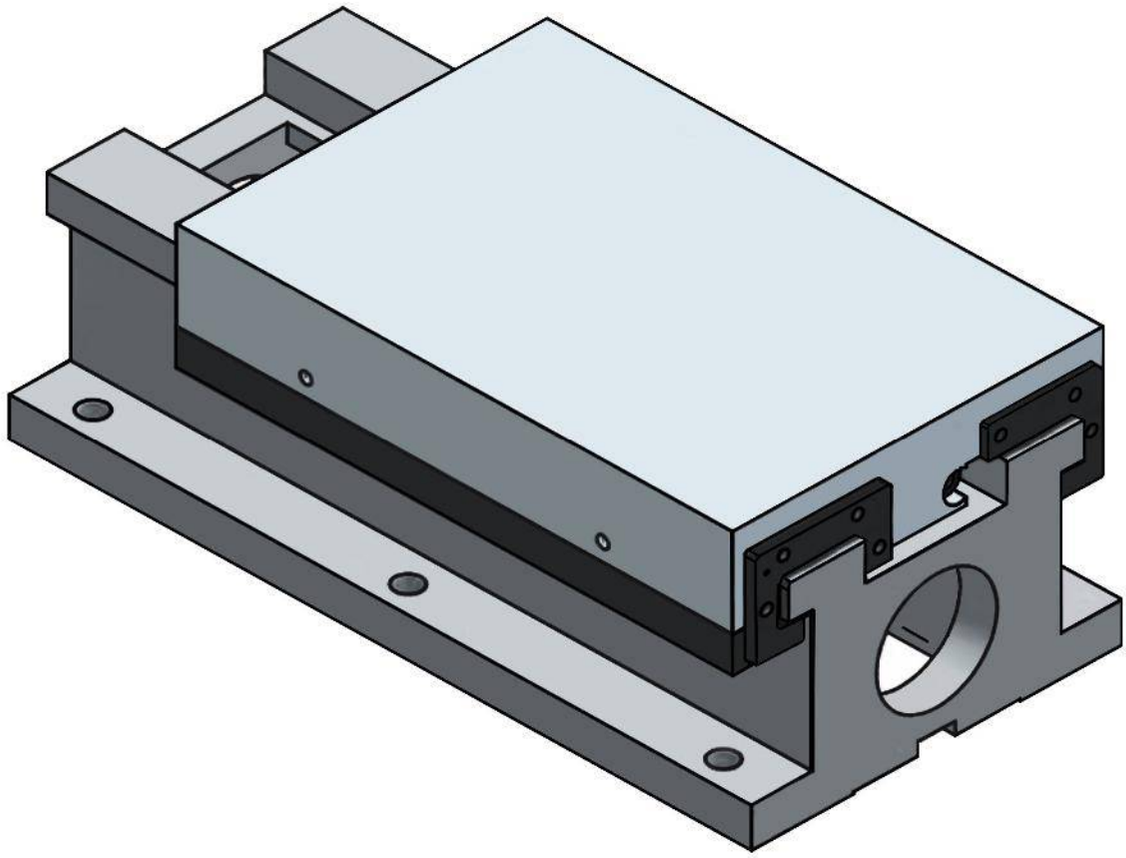

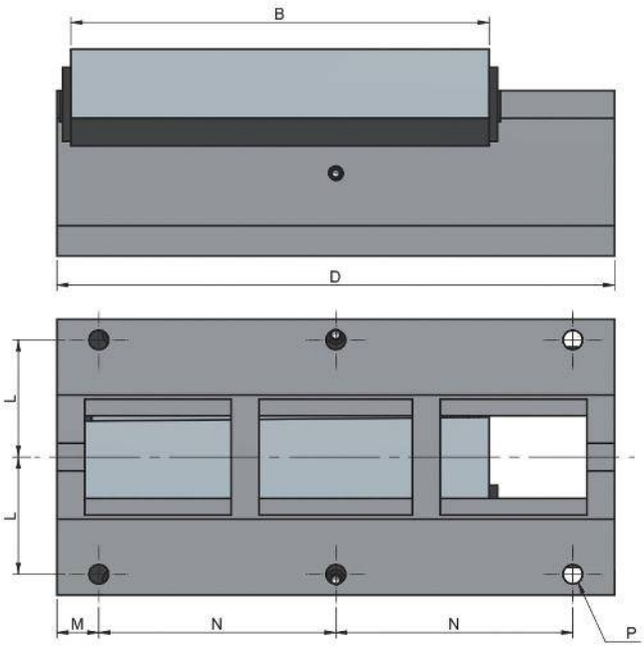

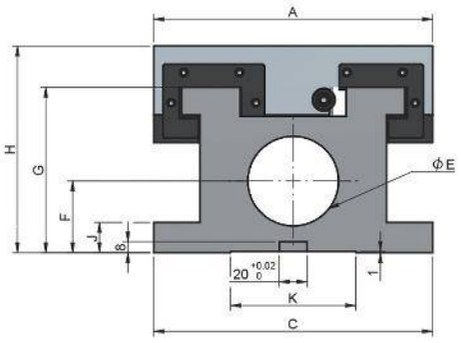

Characteristics & Dimensions

Model	HF-2060
A x B	*200.00 x 300.00*
C x D	*200.00 x 600.00*
E	*65.00*
F	*52.00*
G	*120.00*
H	*150.00*
J	*22.00*
K	*90.00*
L	*85.00*
M	*30.00*
N	*180.00*
P	*8.00 - Ø14*
Total Weight (Kg)	*58.00*

** All dimensions are given in millimeters.*

HF-3050
Square Box Slide Profile

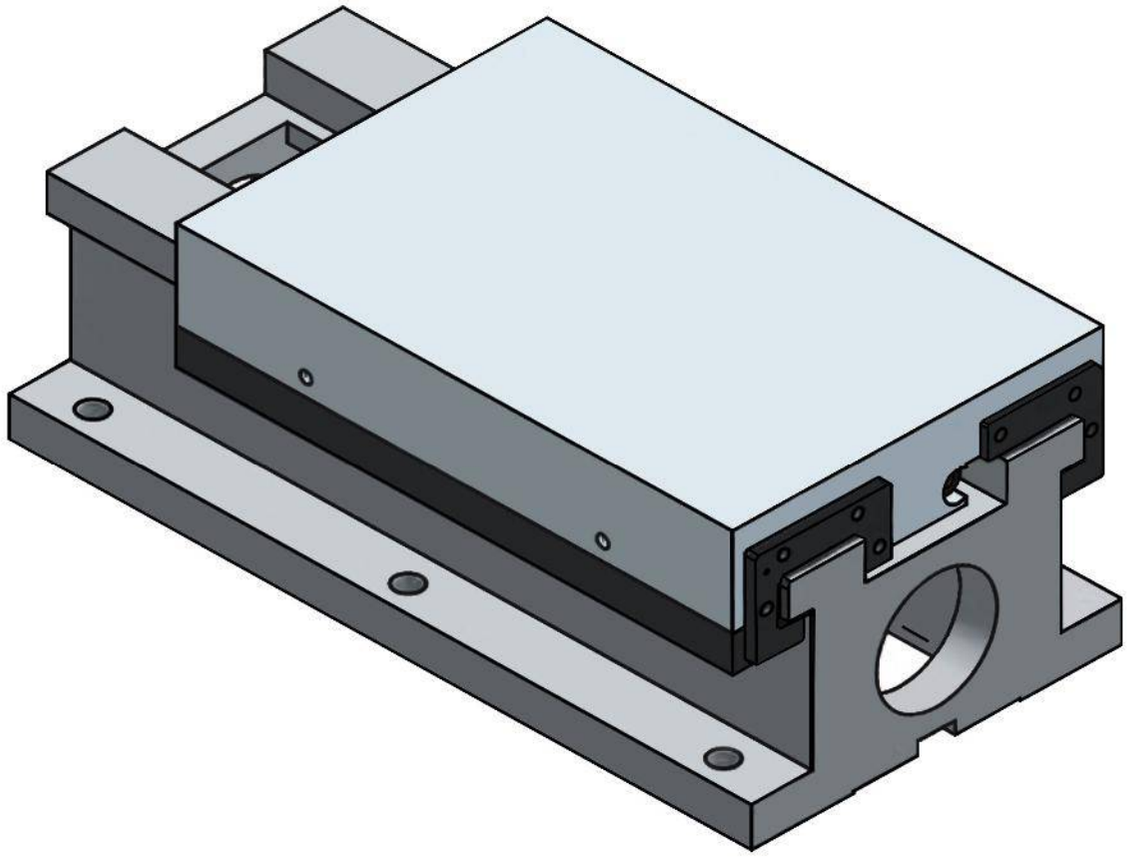

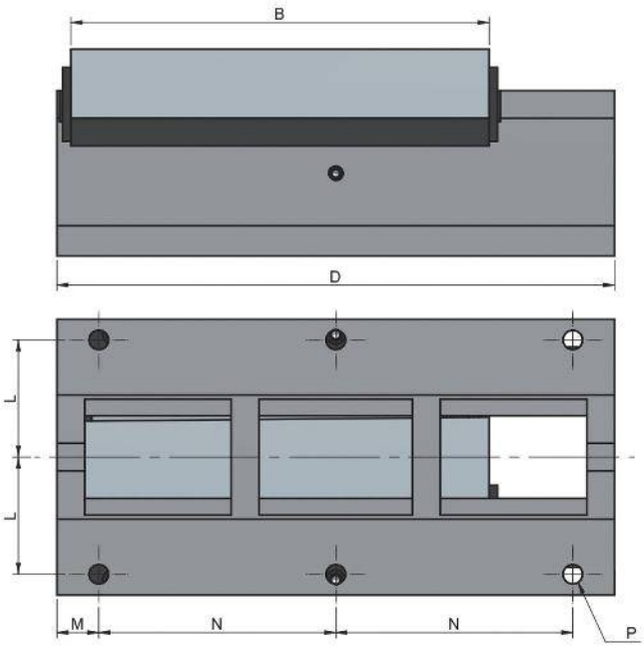

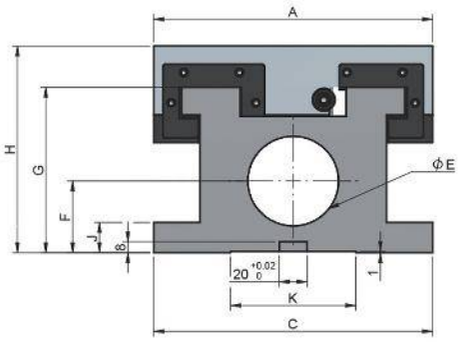

Characteristics & Dimensions

MODEL	HF-3050
A x B	*300.00 x 350.00*
C x D	*300.00 x 500.00*
E	*75.00*
F	*63.00*
G	*145.00*
H	*180.00*
J	*27.00*
K	*175.00*
L	*125.00*
M	*30.00*
N	*220.00*
P	*6.00 - Ø18*
Total Weight (Kg)	*92.00*

** All dimensions are given in millimeters.*

HF-3070
Square Box Slide Profile

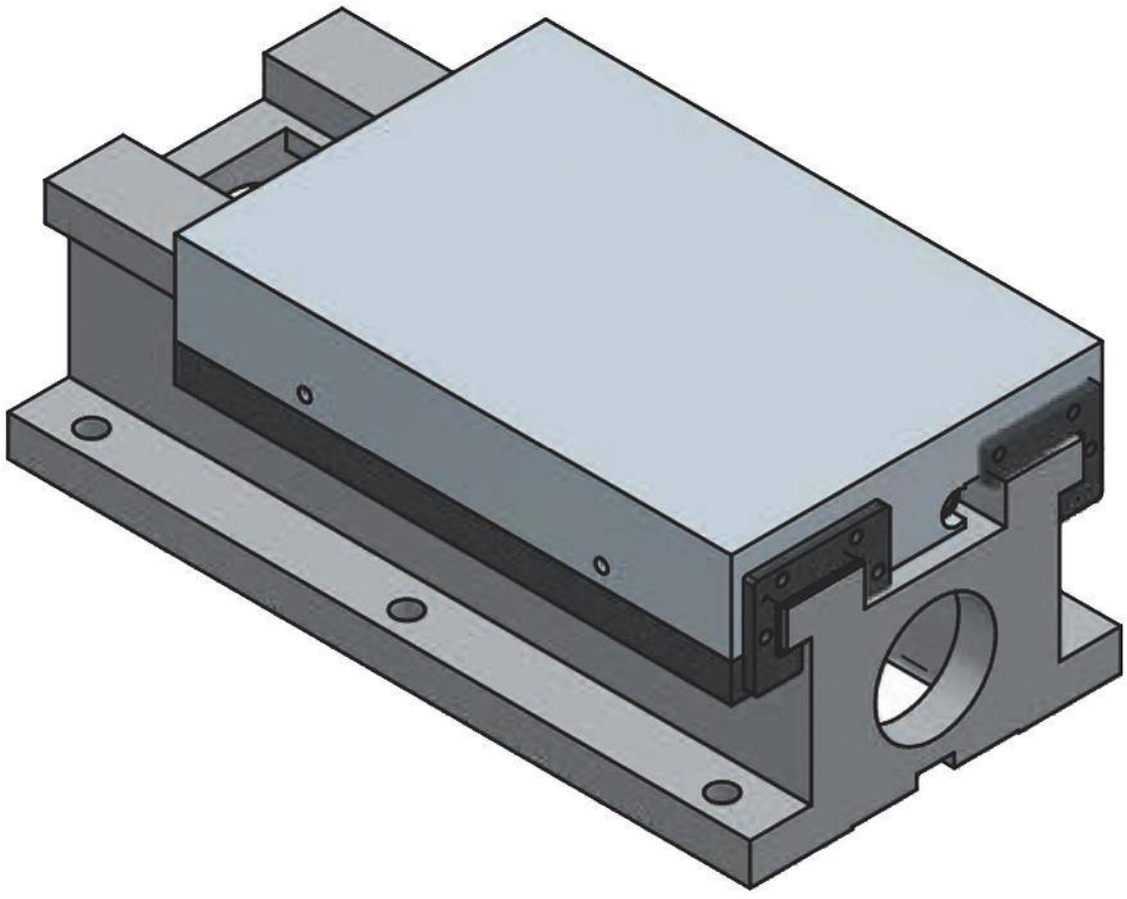

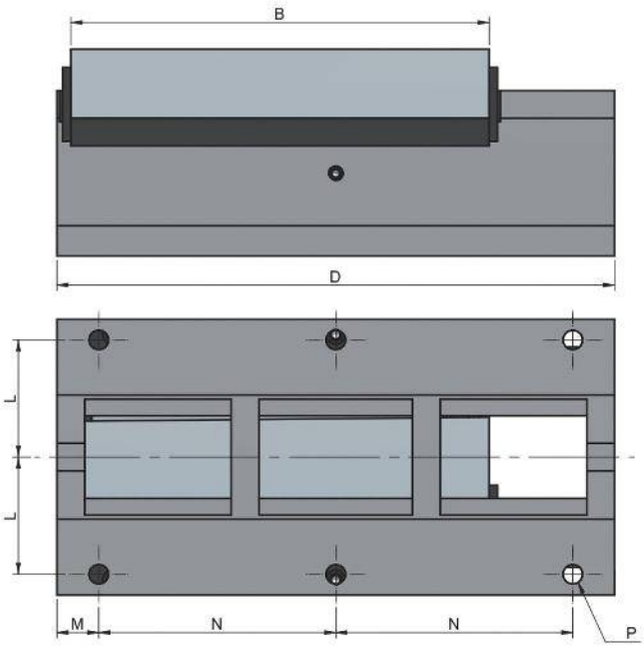

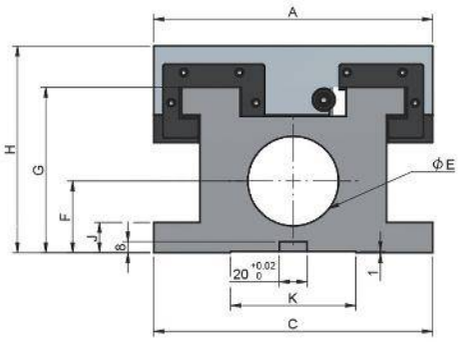

Characteristics & Dimensions

MODEL	HF-3070
A x B	*300.00 x 350.00*
C x D	*300.00 x 700.00*
E	*75.00*
F	*63.00*
G	*145.00*
H	*180.00*
J	*27.00*
K	*175.00*
L	*125.00*
M	*35.00*
N	*210.00*
P	*8.00 - Ø18*
Total Weight (Kg)	*114.00*

** All dimensions are given in millimeters.*

HFV SERIES

DUCK TAIL BOX SLIDE PROFILE

HFV-1530
Duck Tail Slide Profile

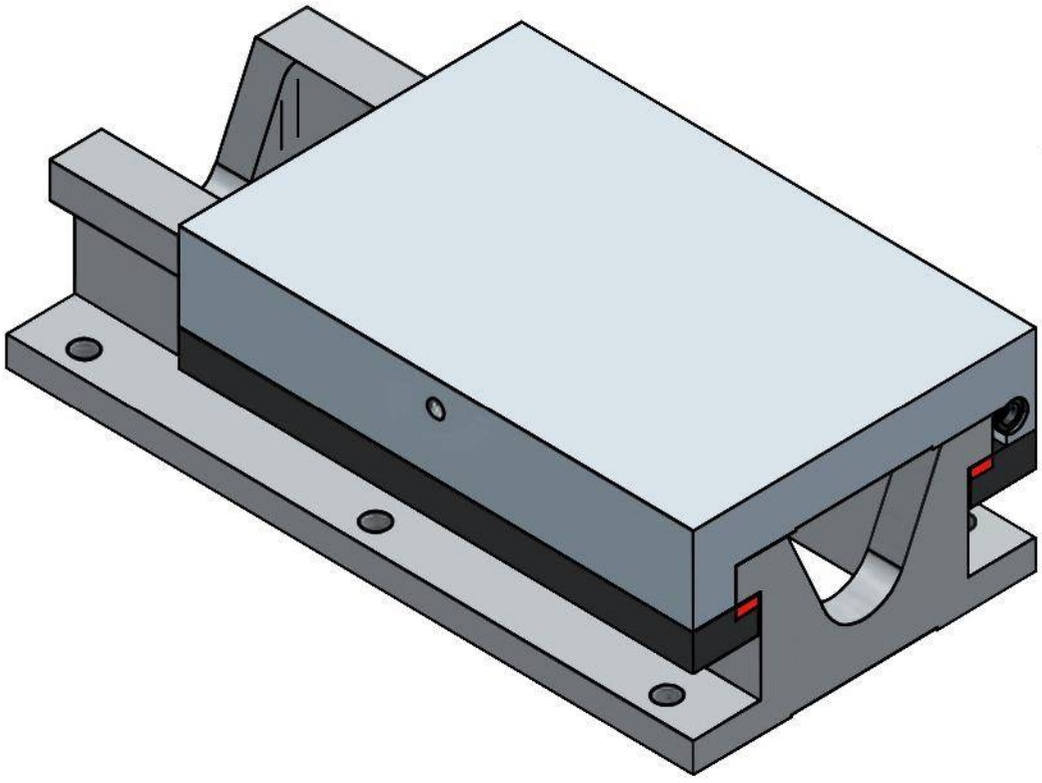

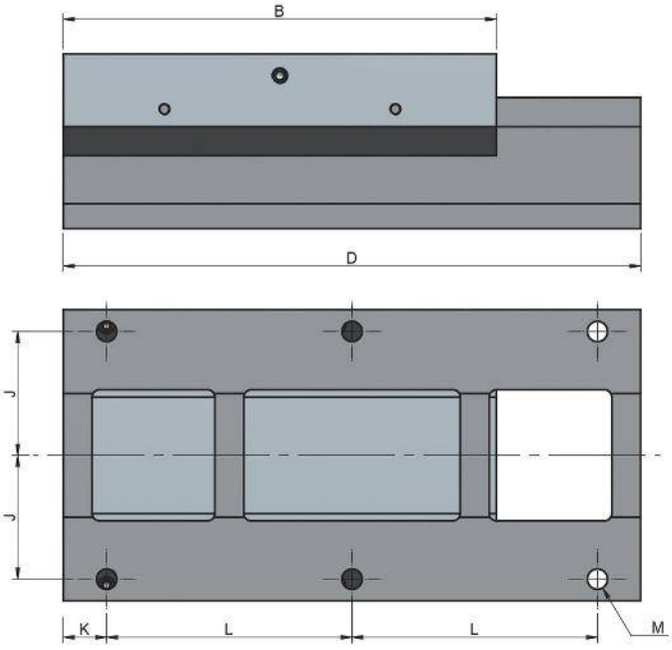

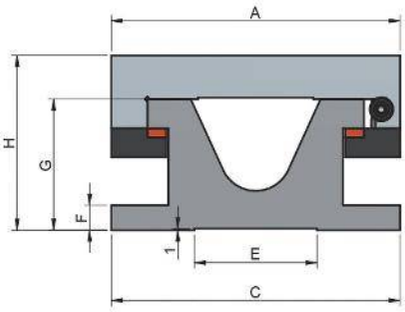

Characteristics & Dimensions

MODEL	HFV-1530
A x B	*155.00 x 200.00*
C x D	*155.00 x 300.00*
E	*70.00*
F	*13.00*
G	*63.00*
H	*83.00*
J	*65.50*
K	*30.00*
L	*240.00*
M	*4.00 - Ø12*
Total Weight (Kg)	*15.00*

** All dimensions are given in millimeters.*

HFV-2040
Duck Tail
Slide Profile

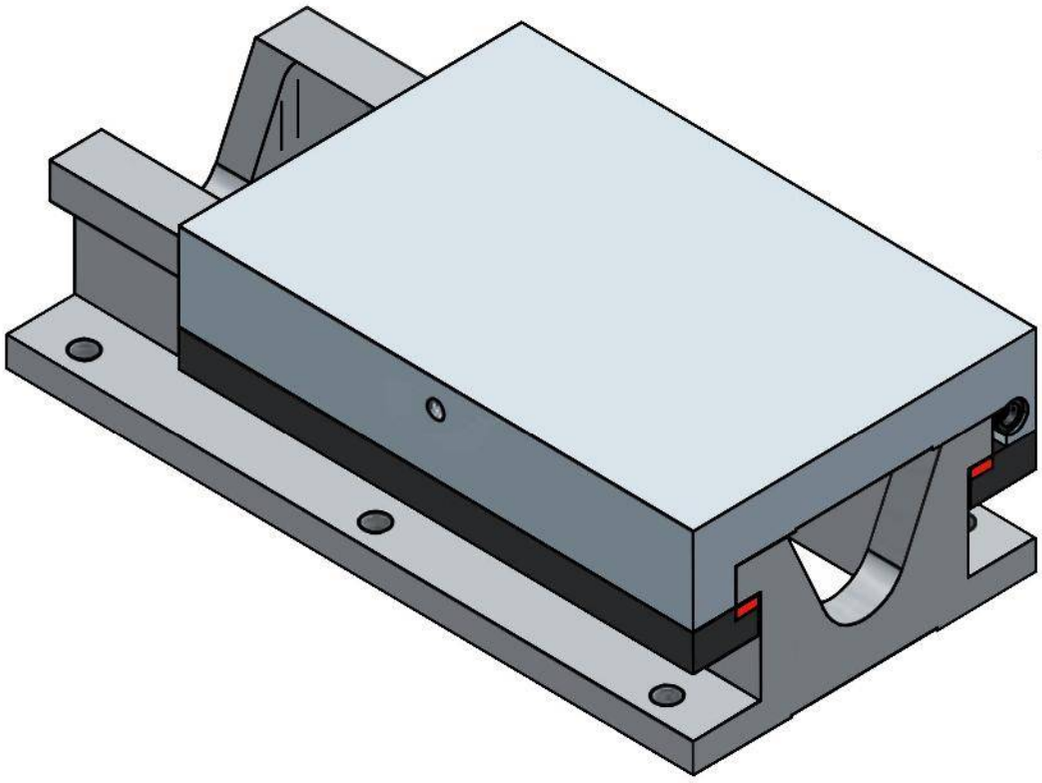

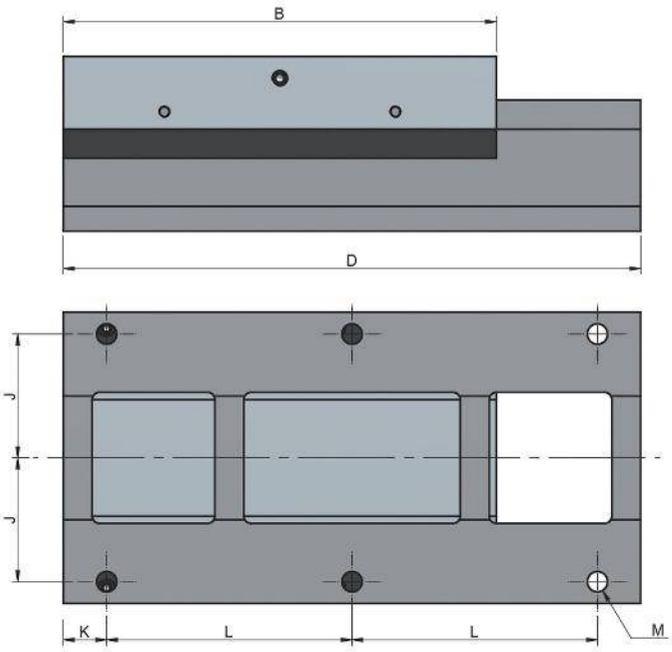

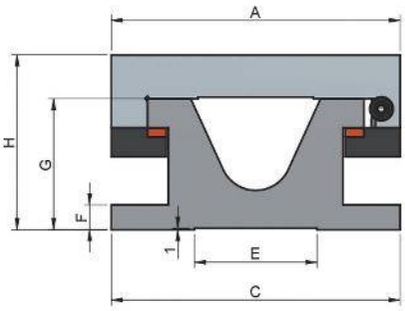

Characteristics & Dimensions

MODEL	HFV-2040
A x B	*200.00 x 300.00*
C x D	*200.00 x 400.00*
E	*85.00*
F	*17.00*
G	*90.00*
H	*120.00*
J	*85.00*
K	*30.00*
L	*170.00*
M	*6.00 - Ø14*
Total Weight (Kg)	*35.00*

** All dimensions are given in millimeters.*

HFV-2060
Duck Tail
Slide Profile

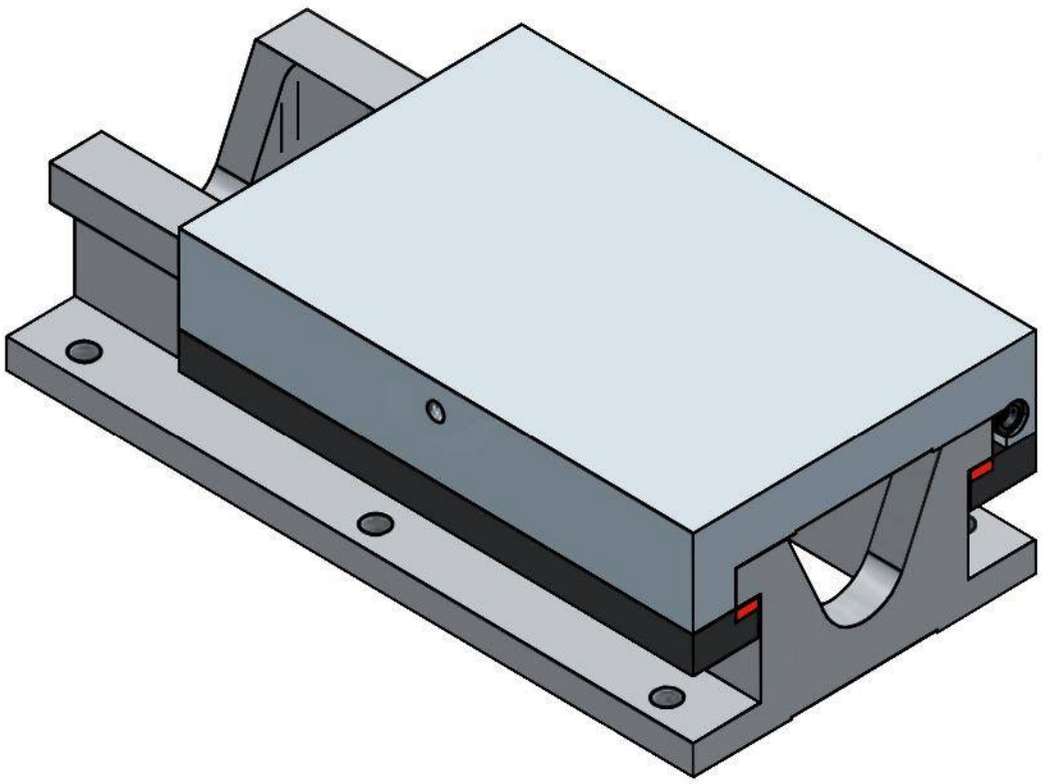

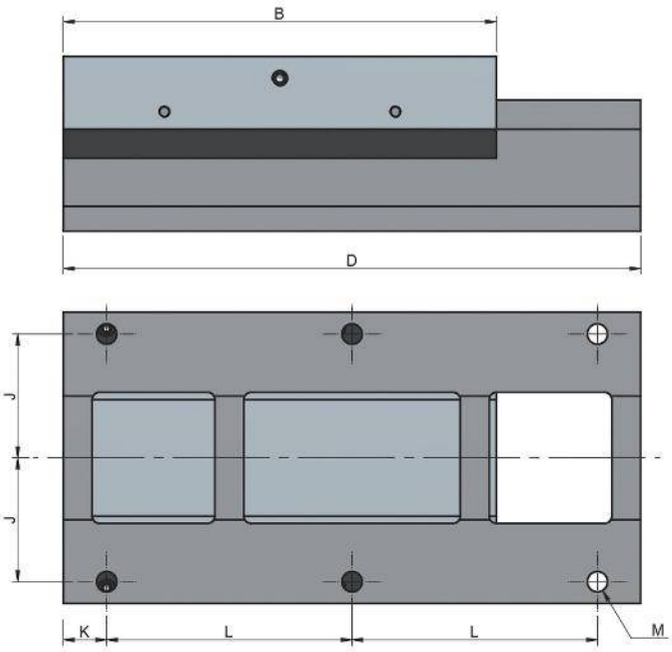

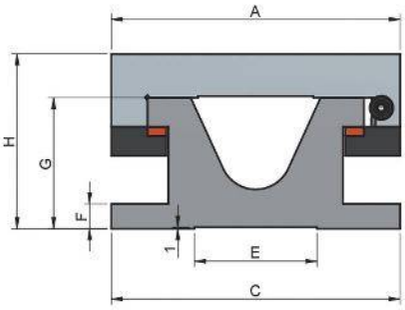

Characteristics & Dimensions

MODEL	HFV-2060
A x B	*200.00 x 300.00*
C x D	*200.00 x 600.00*
E	*85.00*
F	*17.00*
G	*90.00*
H	*120.00*
J	*85.00*
K	*45.00*
L	*170.00*
M	*8.00 - Ø14*
Total Weight (Kg)	*46.00*

** All dimensions are given in millimeters.*

HFV-2080
Duck Tail
Slide Profile

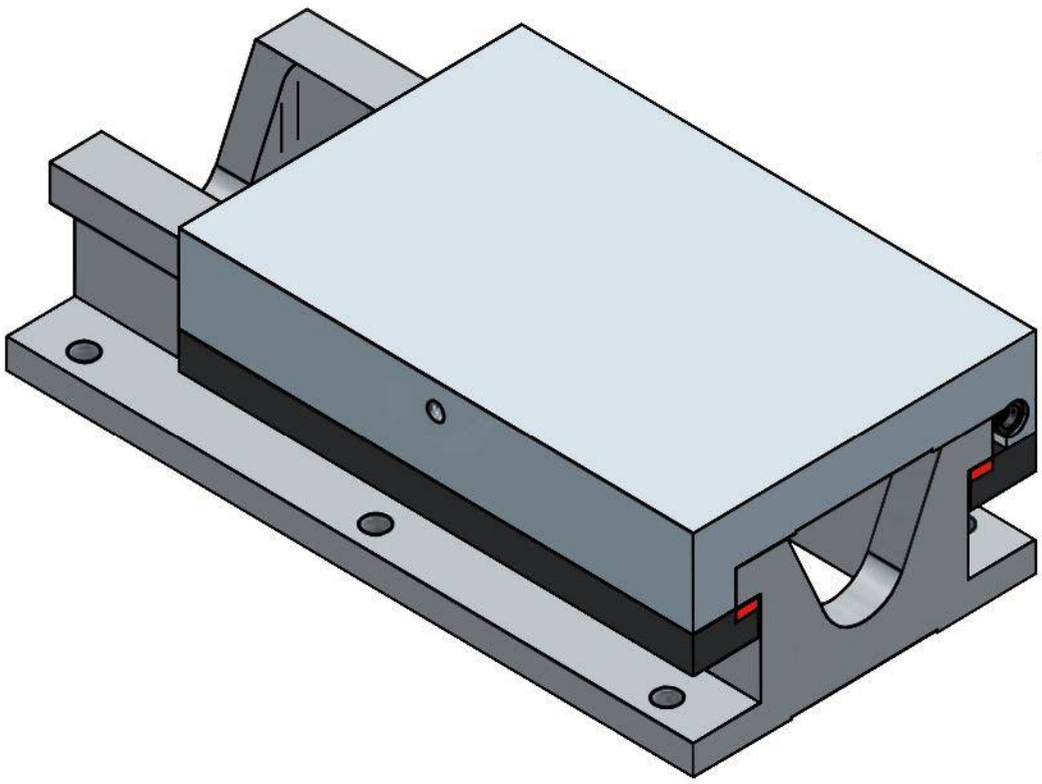

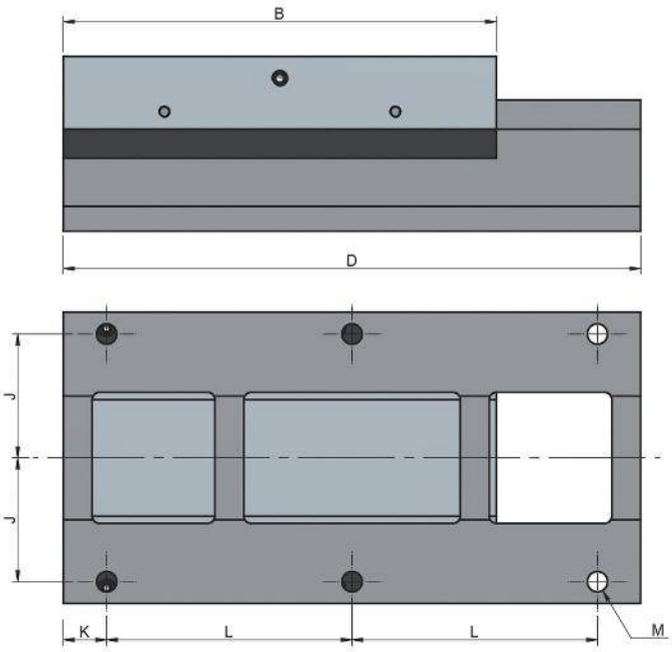

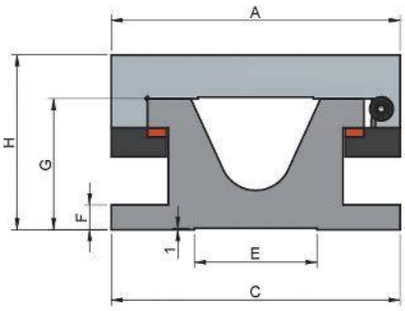

Characteristics & Dimensions

MODEL	HFV-2080
A x B	*200.00 x 300.00*
C x D	*200.00 x 800.00*
E	*85.00*
F	*17.00*
G	*90.00*
H	*120.00*
J	*85.00*
K	*40.00*
L	*180.00*
M	*10.00 - Ø14*
Total Weight (Kg)	*56.00*

** All dimensions are given in millimeters.*

HS SERIES

HYDRAULIC SLIDES

HS150-200/300

Hydraulic Slide

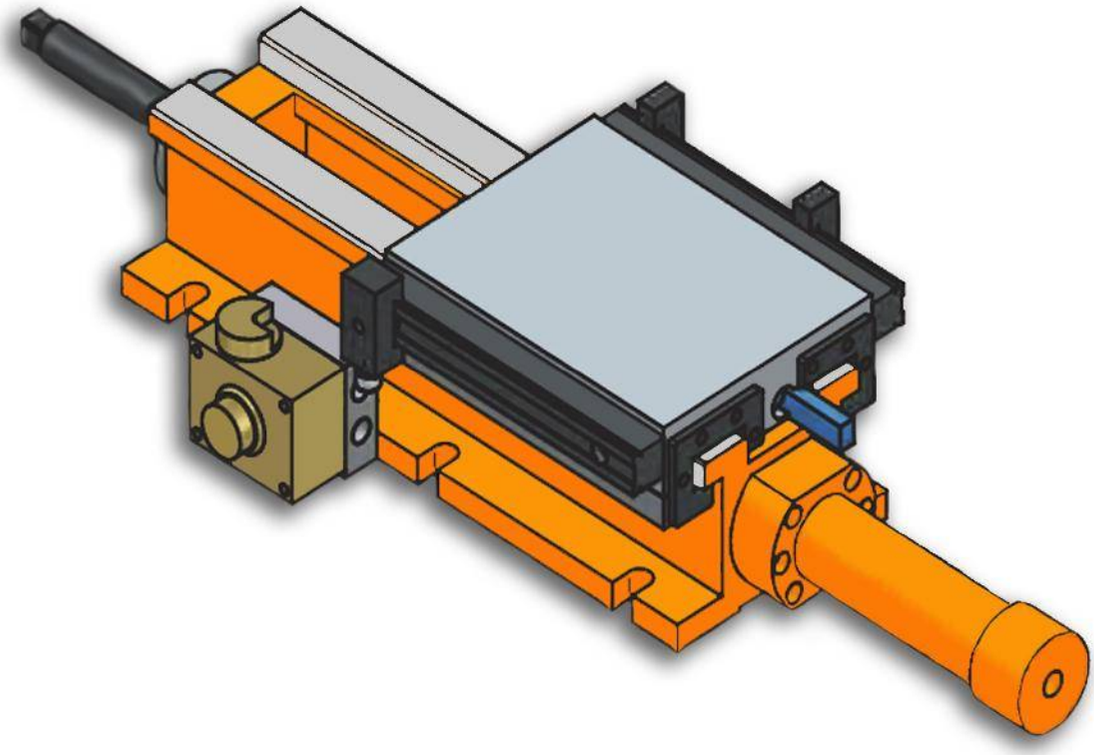

Characteristics & Dimensions

MODEL	HS150-200/300
Profile Width	***150.00***
A	***220.00***
B	-
C	-
C1	-
C2	-
C3	-
C4	-
C5	-
D	-
E ***(Profile Length)***	***300.00***
F ***(Lead Screw Pace)***	-
L ***(Piston Length)***	***85.00***
Maximum Stroke	***80.00***
Device Total Weight ***(kg)***	***37.00***

***** All dimensions are given in millimeters.*

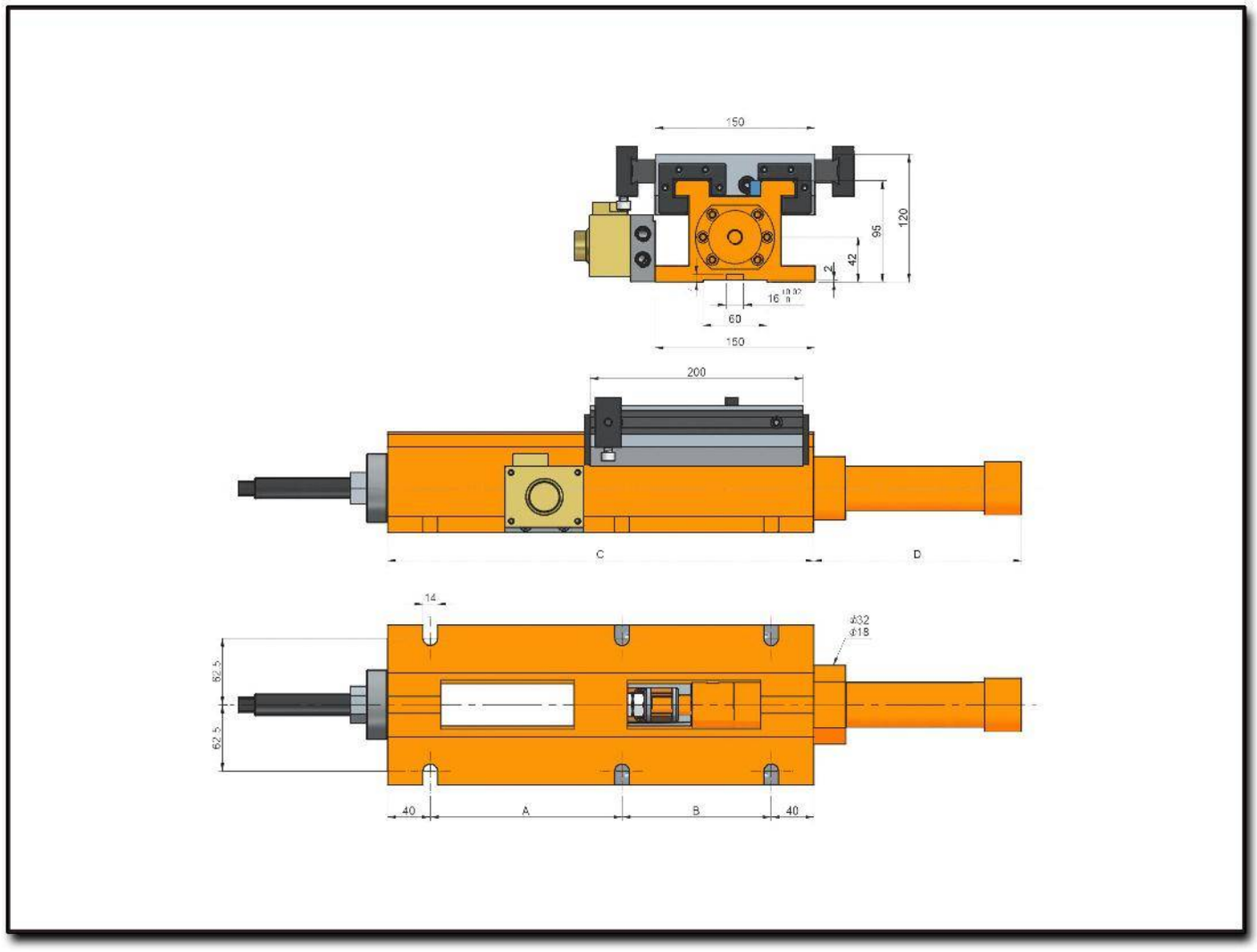
150
120
95
42
2
16
60
150
200
C
D
14
Ø32
Ø18
62.5
62.5
40
A
B
40

HS150-200/400

Hydraulic Slide

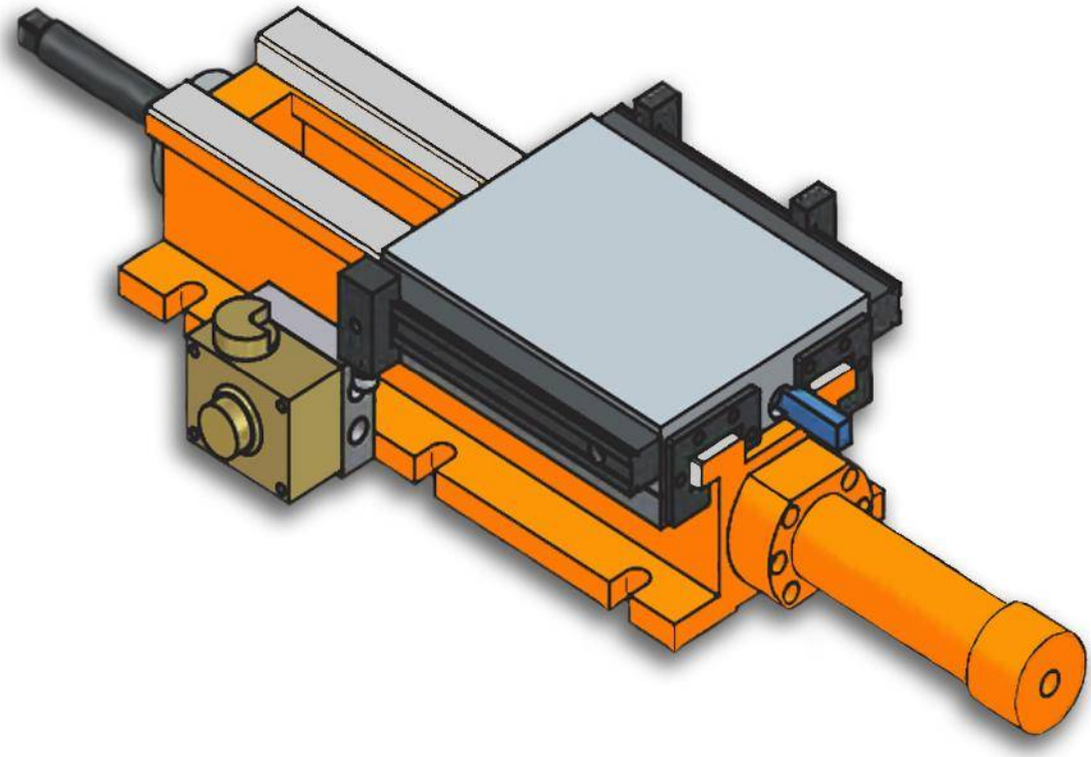

Characteristics & Dimensions

MODEL	HS150-200/400
Profile Width	*150.00*
A	*180.00*
B	*140.00*
C	
C1	-
C2	-
C3	-
C4	-
C5	-
D	-
E ***(Profile Length)***	*400.00*
F ***(Lead Screw Pace)***	-
L ***(Piston Length)***	*195.00*
Maximum Stroke	*180.00*
Device Total Weight ***(kg)***	*45.00*

***** All dimensions are given in millimeters.*

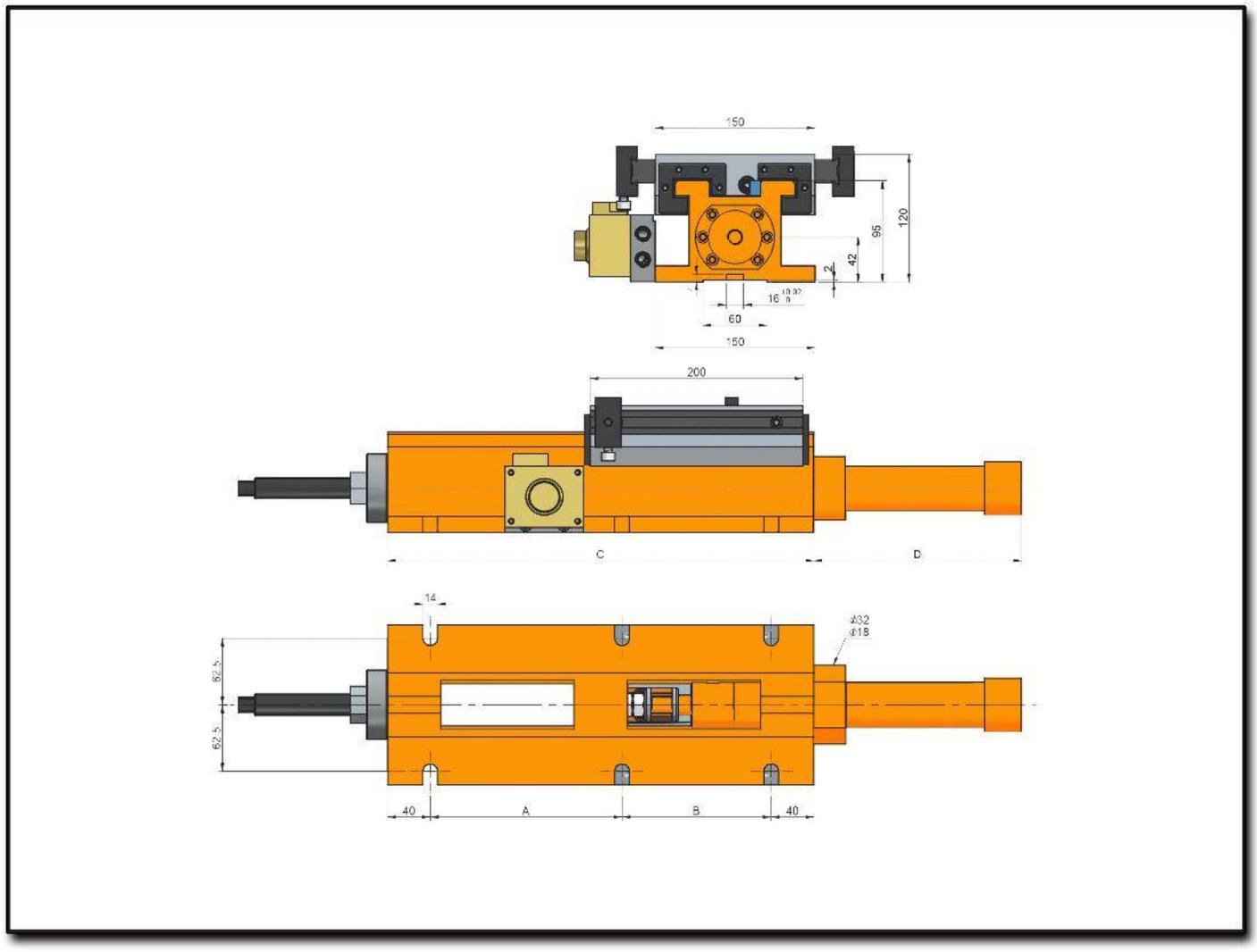
150
120
95
42
2
16
60
150
200
C
D
14
Ø32
Ø18
62.5
62.5
40
A
B
40

HS180-250/370

Hydraulic Slide

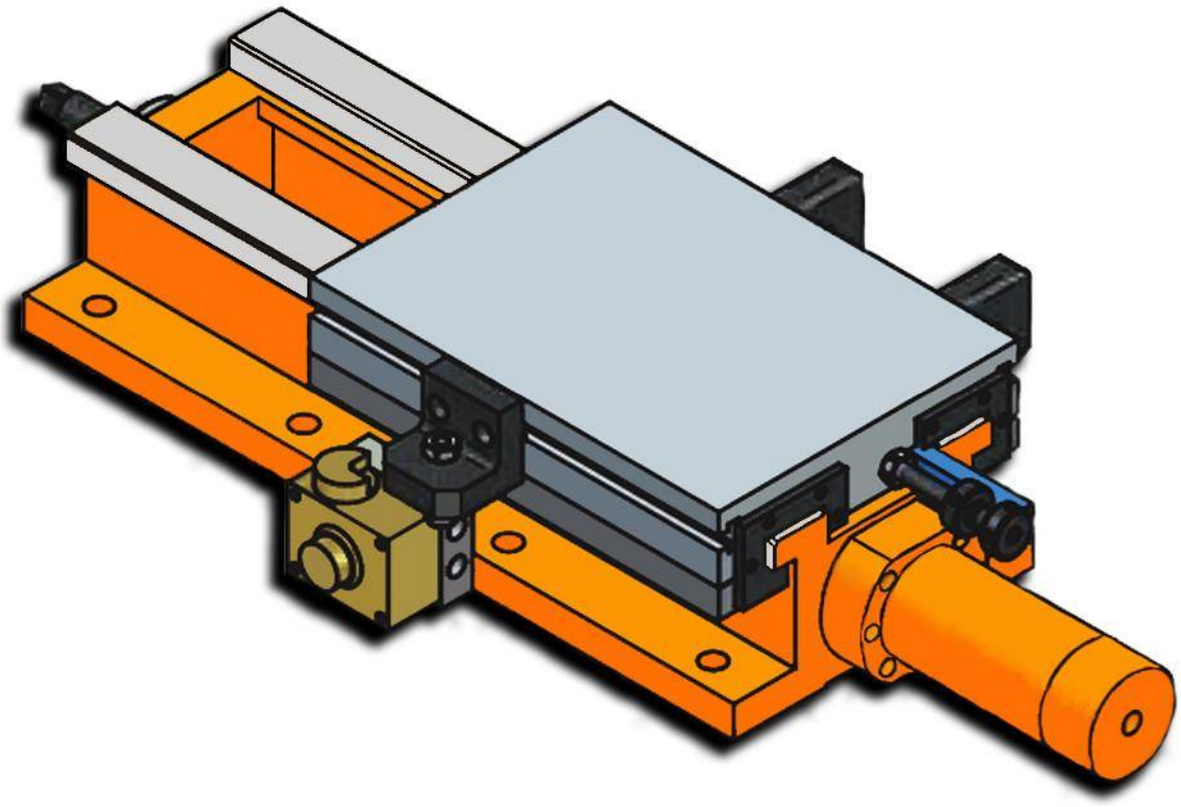

Characteristics & Dimensions

MODEL	HS180 250-370
Profile Width	*180.00*
A	*180.00*
B	*140.00*
C	*370.00*
C1	-
C2	-
C3	-
C4	-
C5	-
D	*25.00*
E ***(Profile Length)***	*370.00*
F ***(Lead Screw Pace)***	-
L ***(Piston Length)***	*65.00*
Maximum Stroke	*100.00*
Device Total Weight ***(kg)***	*66.00*

***** All dimensions are given in millimeters.*

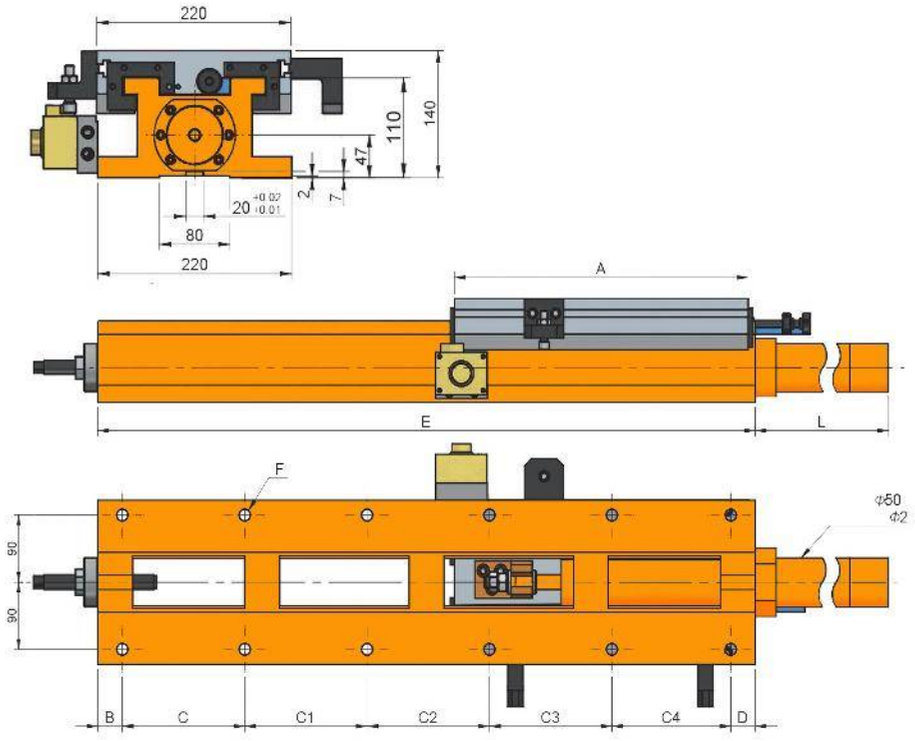
220
140
110
47
2
7
20 +0.02 +0.01
80
220
A
E
L
F
Φ50
Φ2
90
90
B
C
C1
C2
C3
C4
D

HS180-250/470

Hydraulic Slide

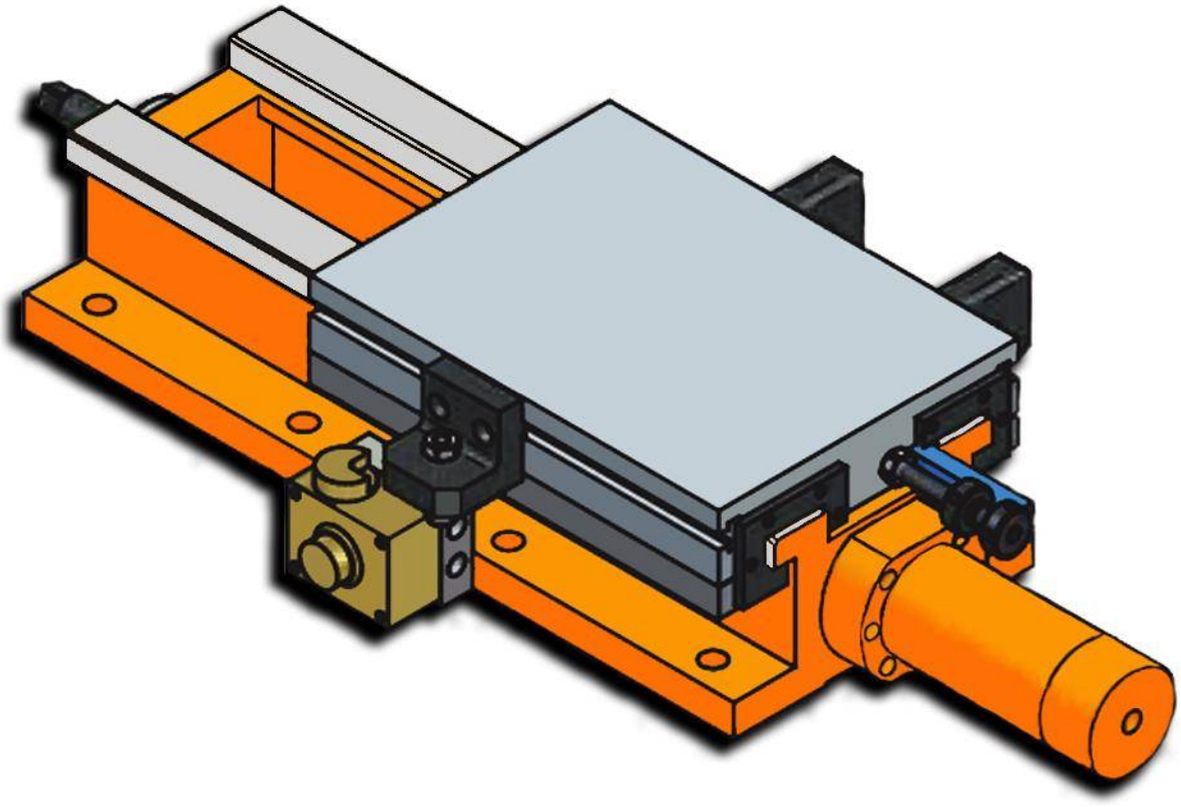

Characteristics & Dimensions

MODEL	HS180 250-470
Profile Width	*180.00*
A	*215.00*
B	*175.00*
C	*470.00*
C1	-
C2	-
C3	-
C4	-
C5	-
D	*40.00*
E ***(Profile Length)***	*165.00*
F ***(Lead Screw Pace)***	-
L ***(Piston Length)***	*165.00*
Maximum Stroke	*200.00*
Device Total Weight ***(kg)***	*72.00*

***** All dimensions are given in millimeters.*

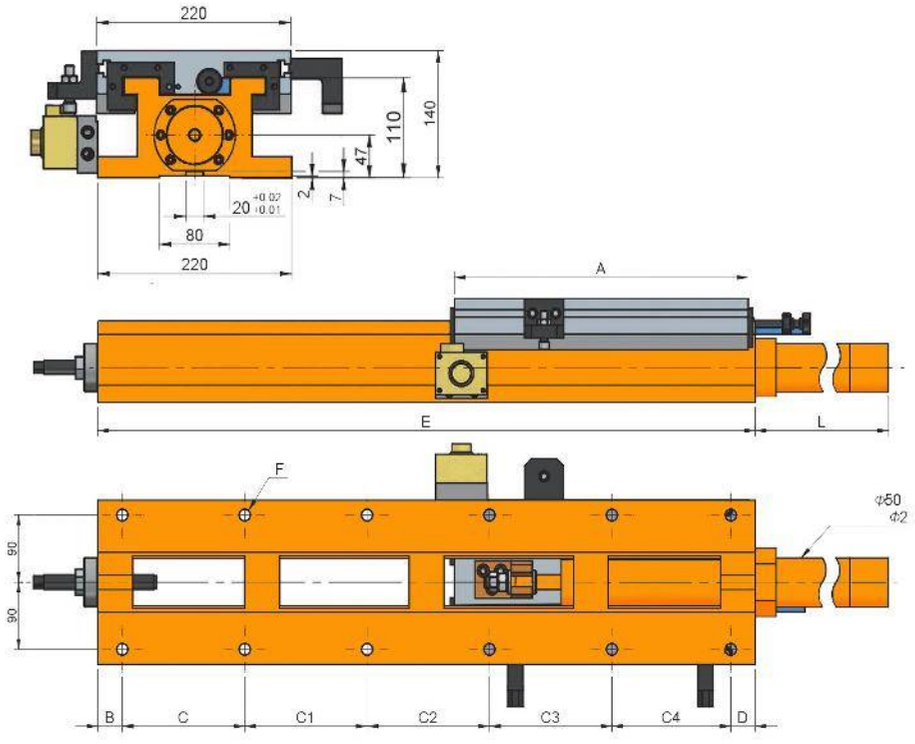
220
140
110
47
2
7
20 +0.02 +0.01
80
220
A
E
L
F
Φ50
Φ2
90
90
B
C
C1
C2
C3
C4
D

HS220-300/420

Hydraulic Slide

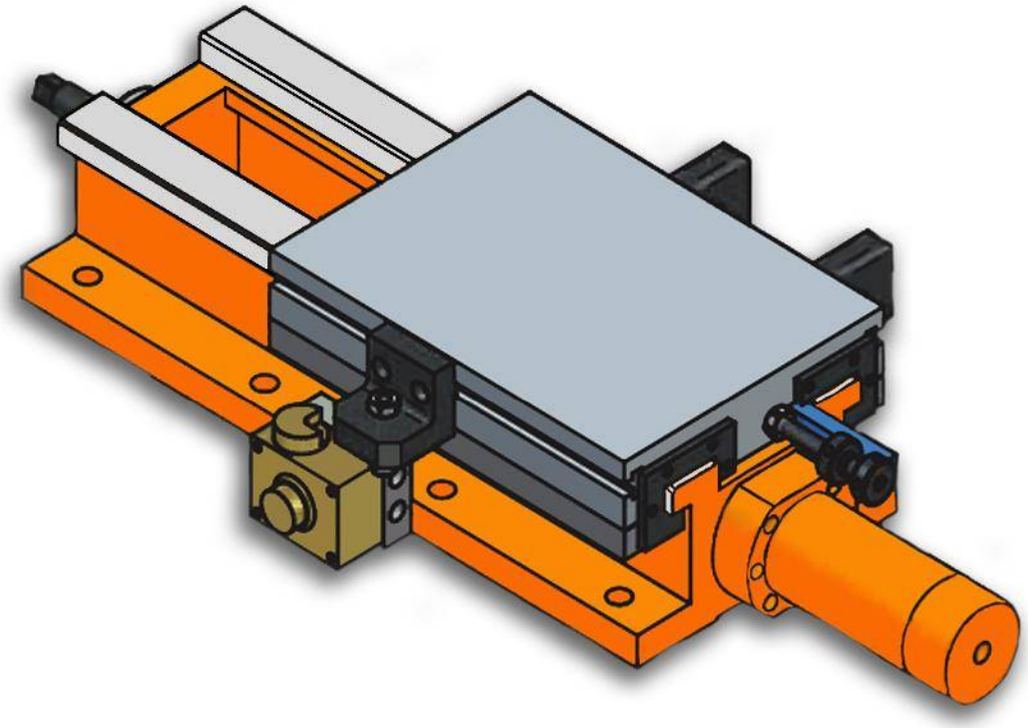

Characteristics & Dimensions

MODEL	HS220-300/420
Profile Width	*220.00*
A	*300.00*
B	*35.00*
C	*150.00*
C1	*200.00*
C2	-
C3	-
C4	-
C5	-
D	*35.00*
E ***(Profile Length)***	*420.00*
F ***(Lead Screw Pace)***	*6 - Ø16*
L ***(Piston Length)***	*65.00*
Maximum Stroke	*100.00*
Device Total Weight ***(kg)***	*62.00*

***** All dimensions are given in millimeters.*

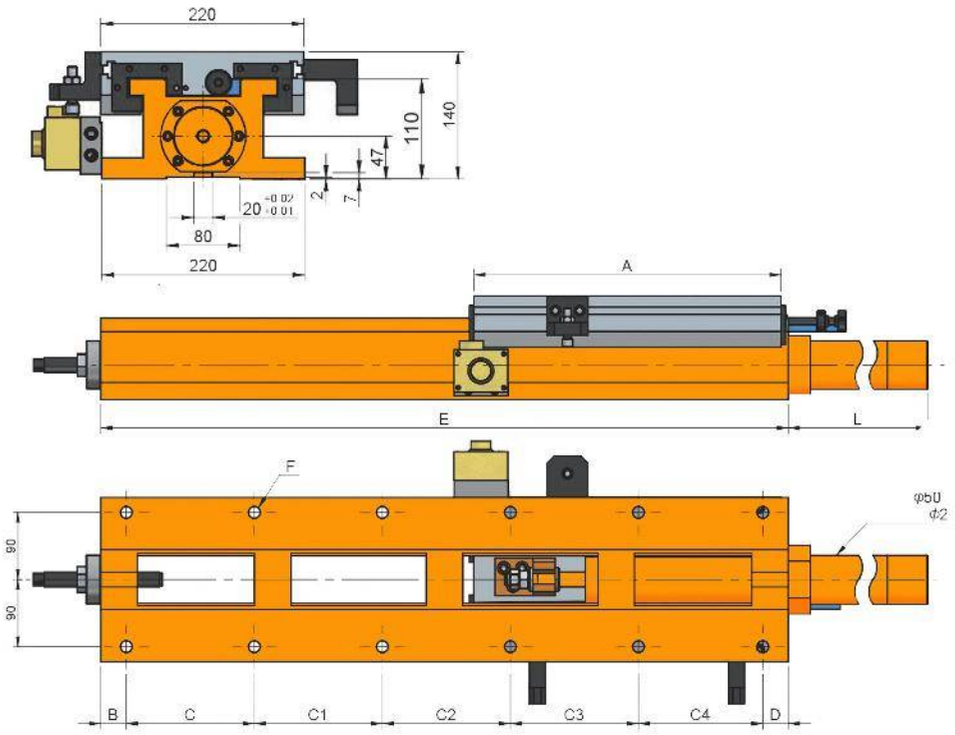
220
140
110
47
2
7
20 -0.02 -0.01
80
220
A
E
L
F
φb0
Φ2
90
90
B
C
C1
C2
C3
C4
D

HS220-300/520

Hydraulic Slide

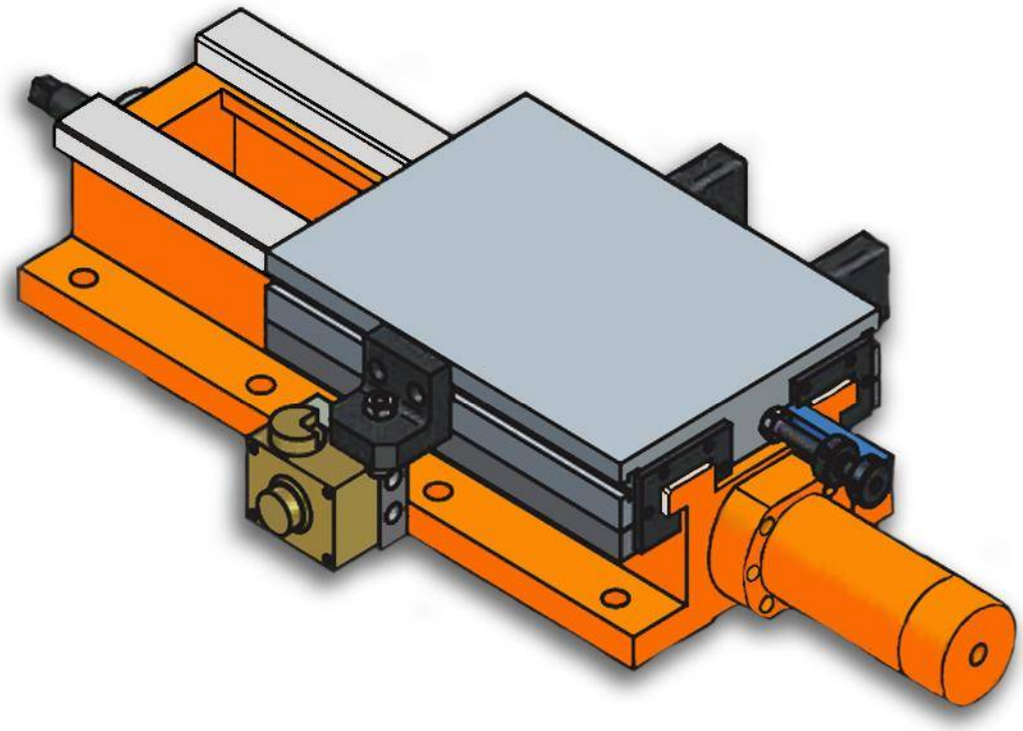

Characteristics & Dimensions

MODEL	HS220-300/520
Profile Width	*220.00*
A	*300.00*
B	*35.00*
C	*150.00*
C1	*150.00*
C2	*150.00*
C3	*-*
C4	*-*
C5	*-*
D	*35.00*
E ***(Profile Length)***	*520.00*
F ***(Lead Screw Pace)***	*8 - Ø16*
L ***(Piston Length)***	*182.00*
Maximum Stroke	*200.00*
Device Total Weight ***(kg)***	*73.00*

***** All dimensions are given in millimeters.*

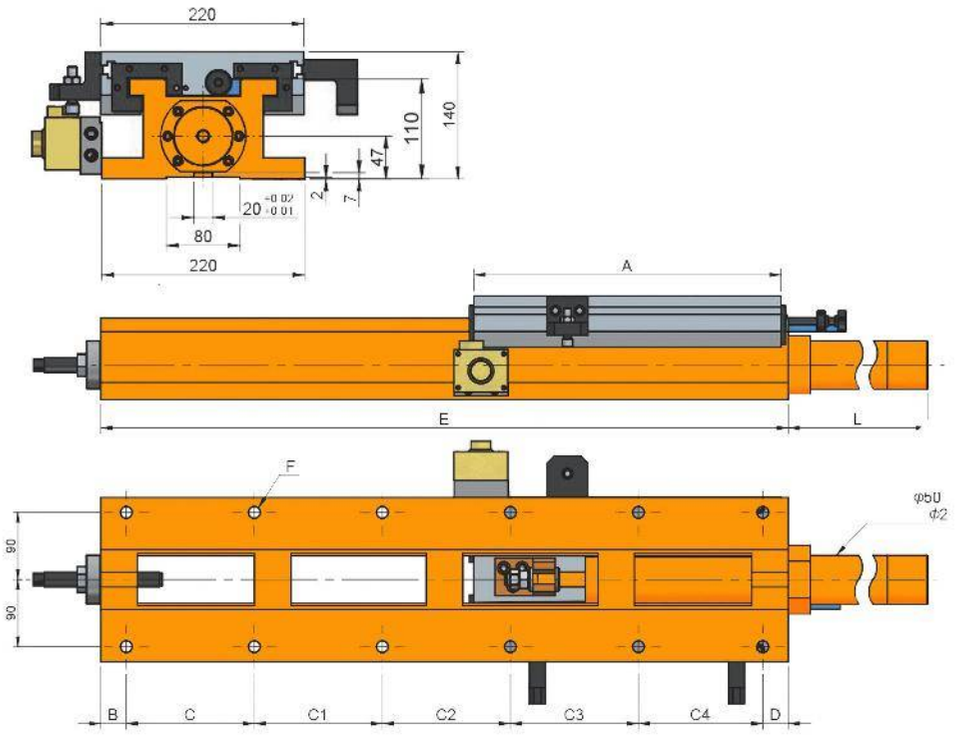
220
140
110
47
2
7
20 -0.02 -0.01
80
220
A
E
L
F
φb0
Φ2
90
90
B
C
C1
C2
C3
C4
D

HS220-300/670

Hydraulic Slide

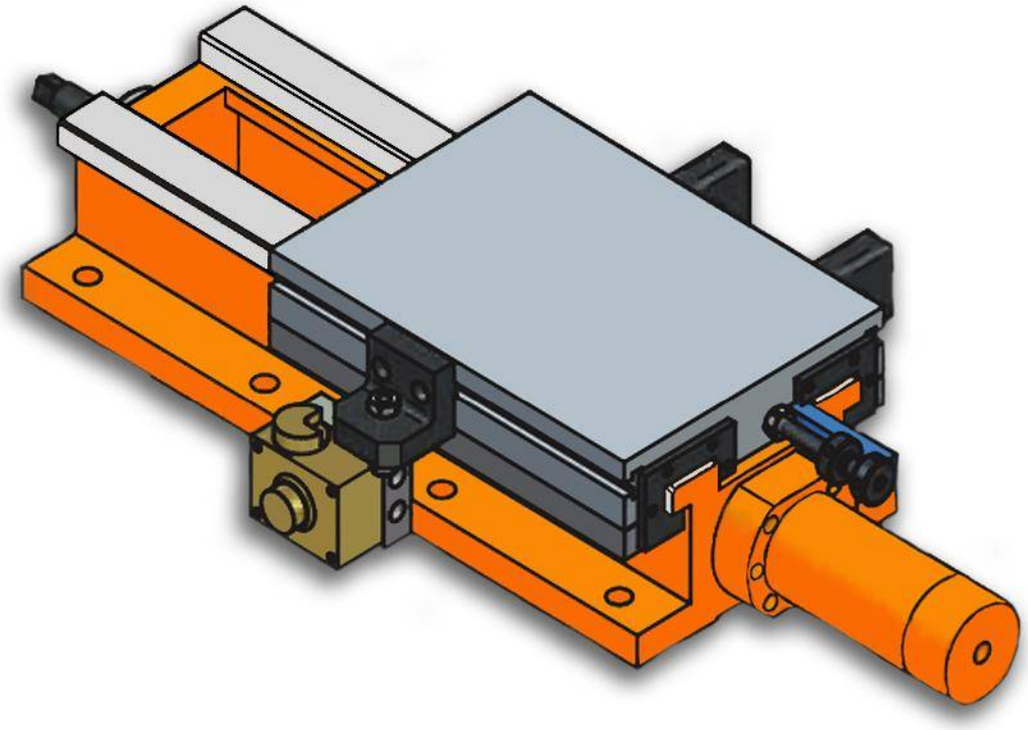

Characteristics & Dimensions

MODEL	HS220-300/670
Profile Width	*220.00*
A	*300.00*
B	*35.00*
C	*140.00*
C1	*140.00*
C2	*140.00*
C3	*180.00*
C4	*-*
C5	*-*
D	*35.00*
E ***(Profile Length)***	*670.00*
F ***(Lead Screw Pace)***	*10 - Ø16*
L ***(Piston Length)***	*332.00*
Maximum Stroke	*350.00*
Device Total Weight ***(kg)***	*85.00*

***** All dimensions are given in millimeters.*

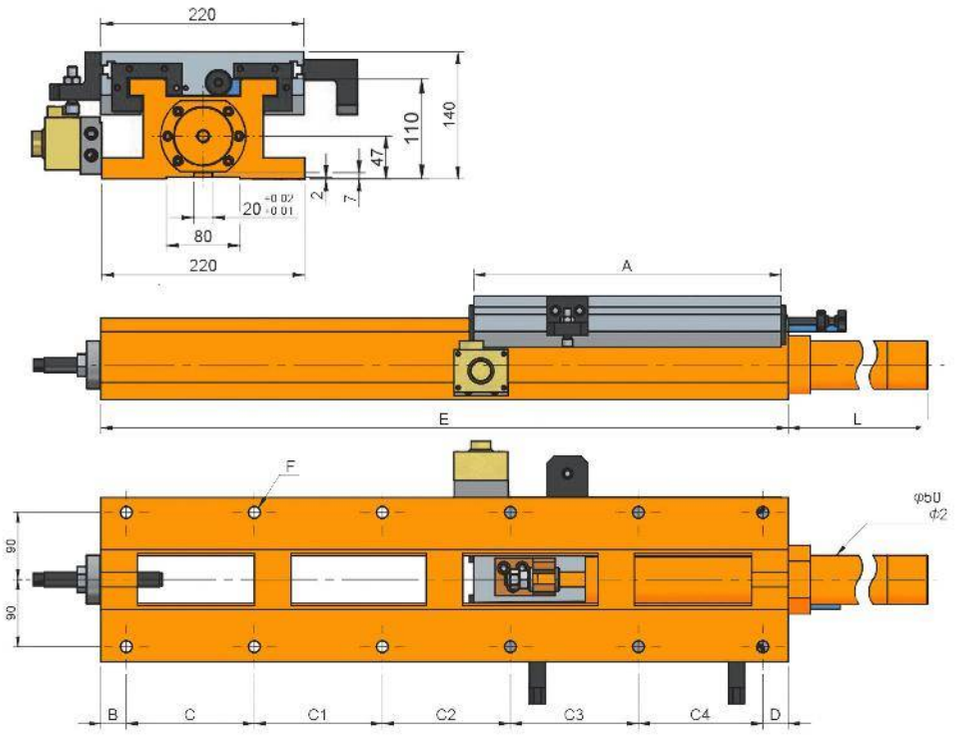
220
140
110
47
2
7
20 -0.02 -0.01
80
220
A
E
L
F
φb0
Φ2
90
90
B
C
C1
C2
C3
C4
D

HS220-420/670

Hydraulic Slide

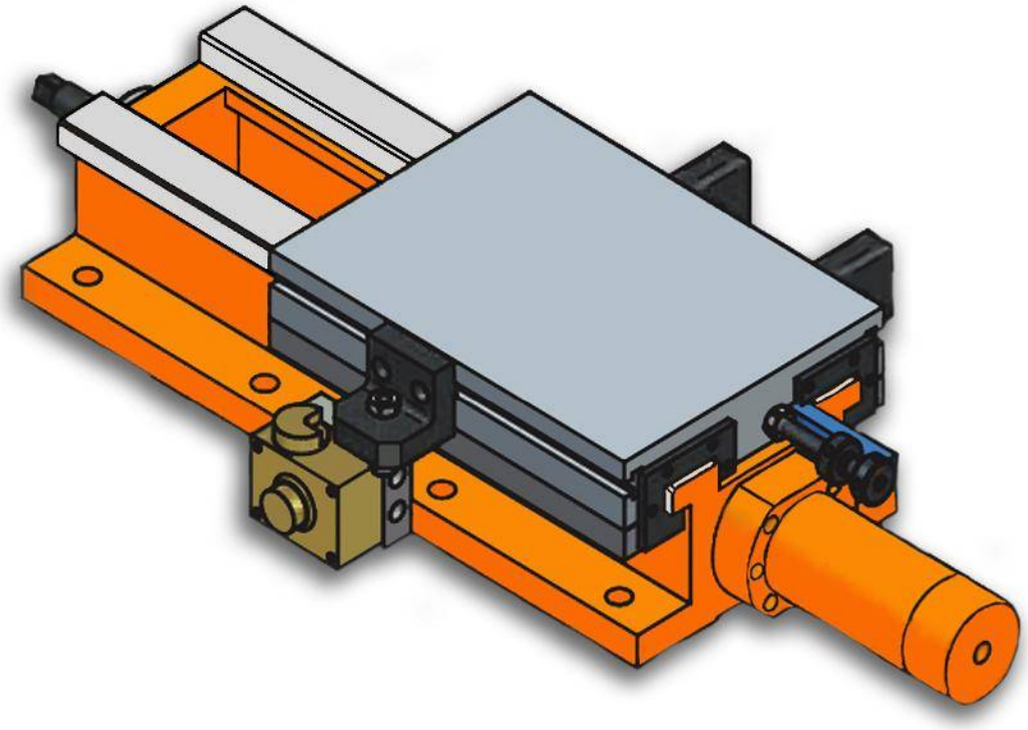

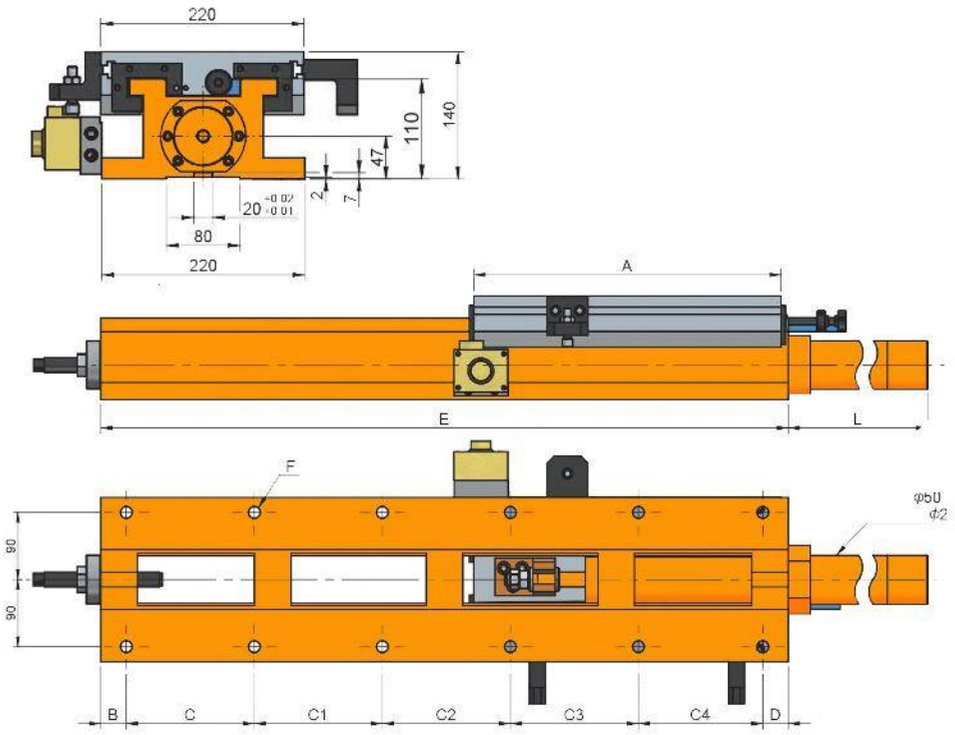
220
140
110
47
2
7
20 -0.02 -0.01
80
220
A
E
L
F
φb0
Φ2
90
90
B
C
C1
C2
C3
C4
D

Characteristics & Dimensions

MODEL	HS220-420/670
Profile Width	*220.00*
A	*420.00*
B	*35.00*
C	*140.00*
C1	*140.00*
C2	*140.00*
C3	*180.00*
C4	*-*
C5	*-*
D	*35.00*
E ***(Profile Length)***	*670.00*
F ***(Lead Screw Pace)***	*10 - Ø16*
L ***(Piston Length)***	*87.00*
Maximum Stroke	*230.00*
Device Total Weight ***(kg)***	*90.00*

***** All dimensions are given in millimeters.*

HS220-420/800

Hydraulic Slide

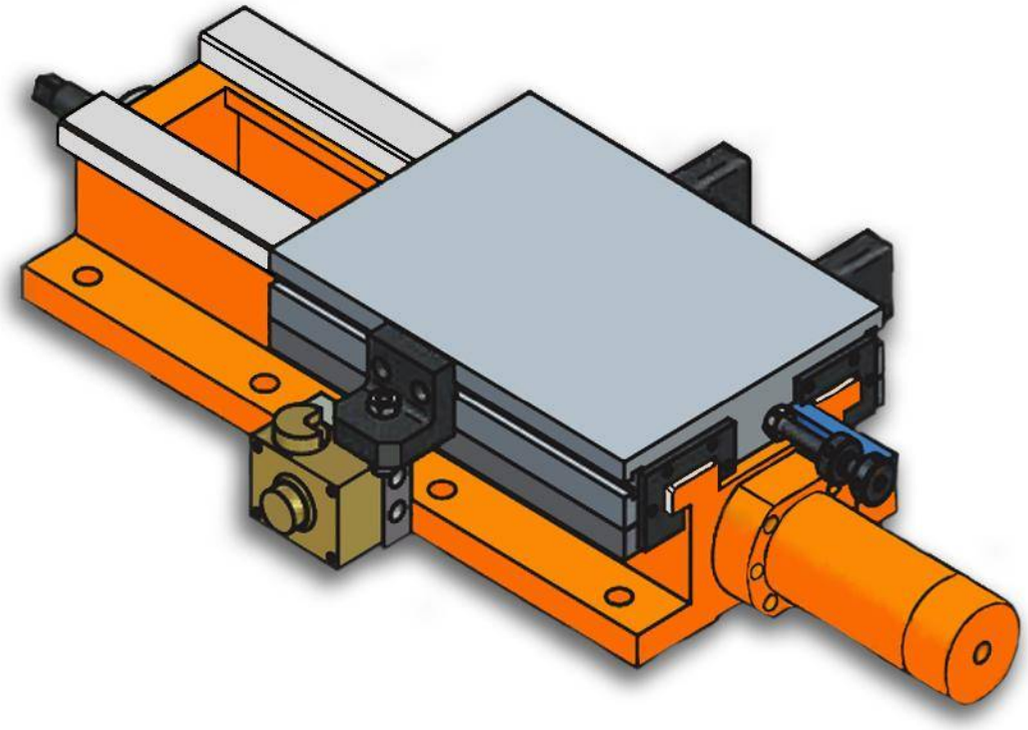

Characteristics & Dimensions

MODEL	HS220-420/800
Profile Width	*220.00*
A	*420.00*
B	*35.00*
C	*140.00*
C1	*140.00*
C2	*140.00*
C3	*140.00*
C4	*170.00*
C5	*-*
D	*35.00*
E ***(Profile Length)***	*800.00*
F ***(Lead Screw Pace)***	*12 - Ø16*
L ***(Piston Length)***	*222.00*
Maximum Stroke	*360.00*
Device Total Weight ***(kg)***	*95.00*

***** All dimensions are given in millimeters.*

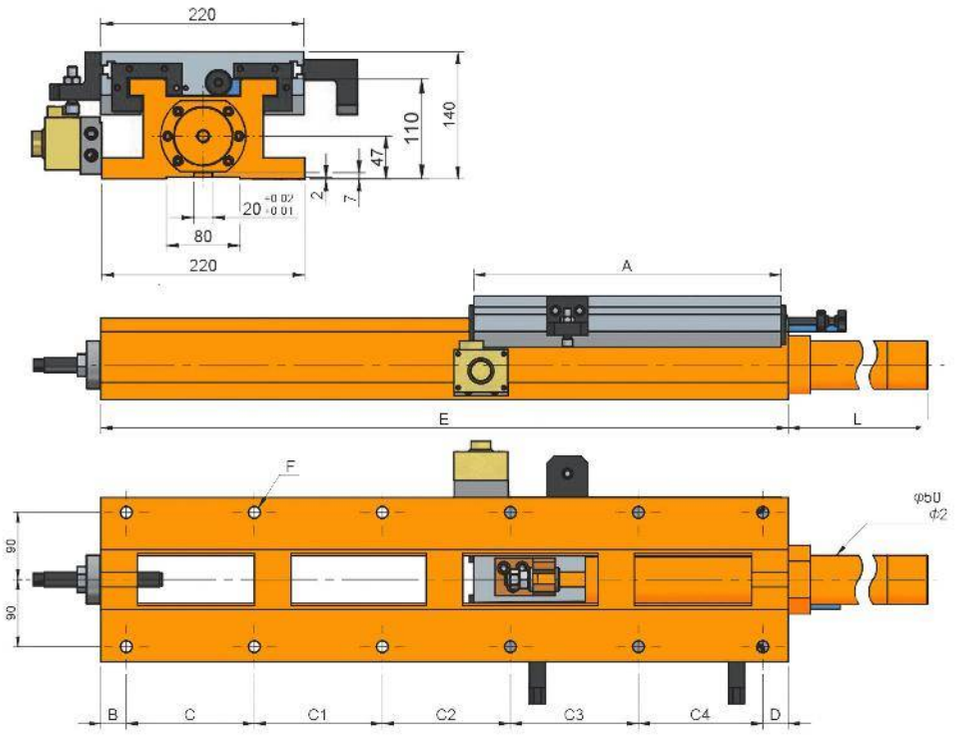
220
140
110
47
2
7
20 -0.02 -0.01
80
220
A
E
L
F
φb0
Φ2
90
90
B
C
C1
C2
C3
C4
D

HS220-420/940

Hydraulic Slide

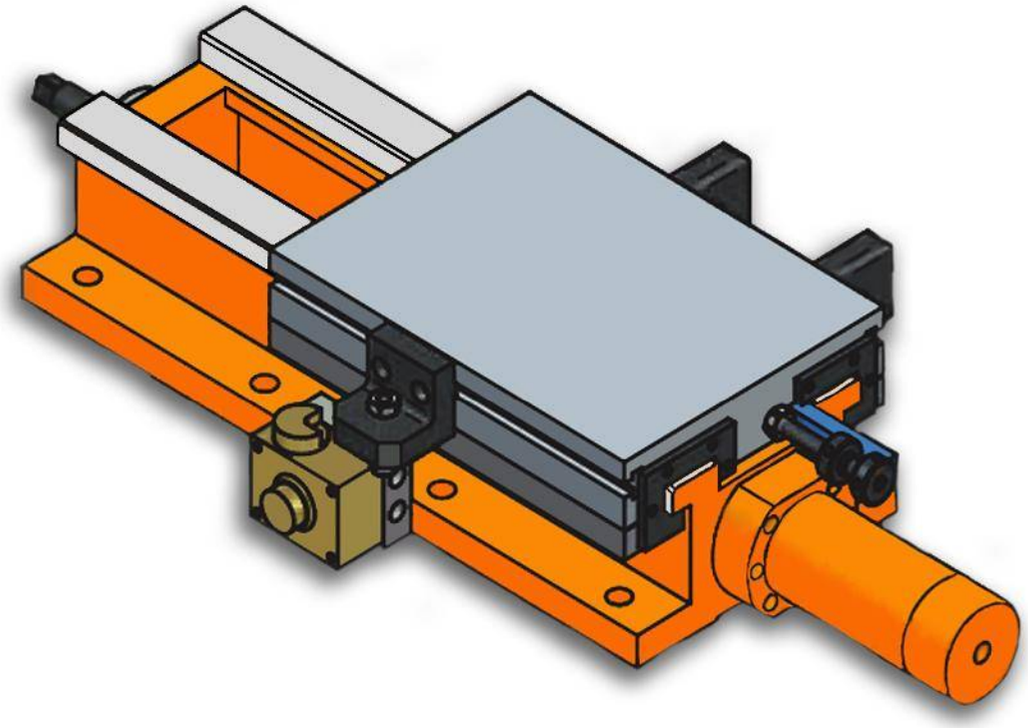

Characteristics & Dimensions

MODEL	HS220-420/940
Profile Width	*220.00*
A	*420.00*
B	*35.00*
C	*175.00*
C1	*175.00*
C2	*175.00*
C3	*175.00*
C4	*170.00*
C5	*-*
D	*35.00*
E ***(Profile Length)***	*940.00*
F ***(Lead Screw Pace)***	*12 - Ø16*
L ***(Piston Length)***	*362.00*
Maximum Stroke	*500.00*
Device Total Weight ***(kg)***	*110.00*

***** All dimensions are given in millimeters.*

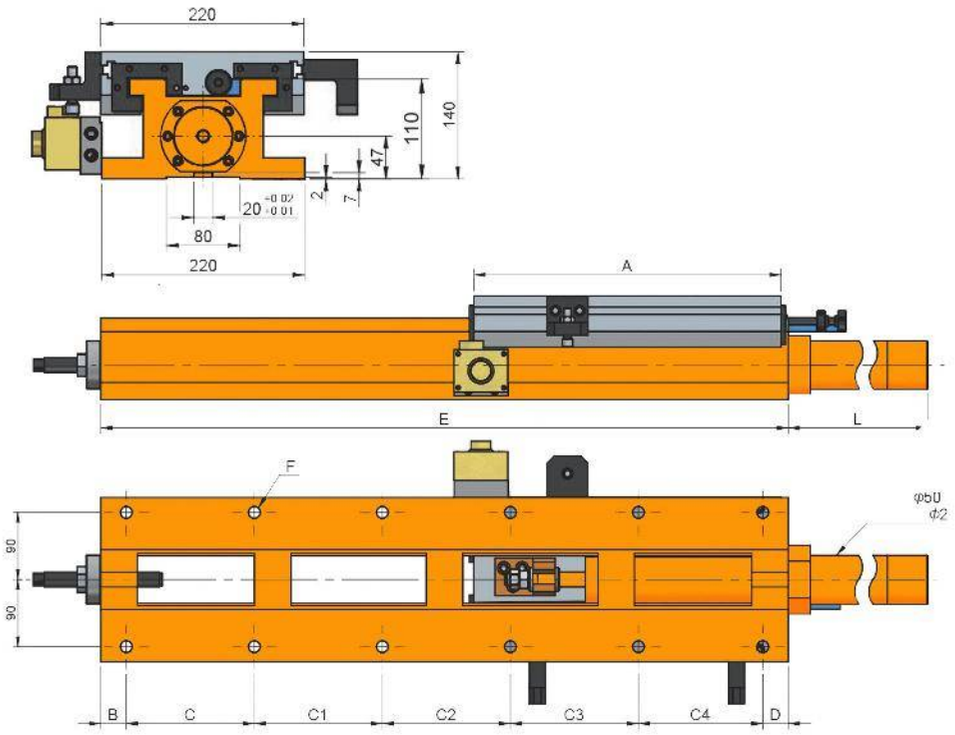
220
140
110
47
2
7
20 -0.02 -0.01
80
220
A
E
L
F
φb0
Φ2
90
90
B
C
C1
C2
C3
C4
D

HS250-300/420

Hydraulic Slide

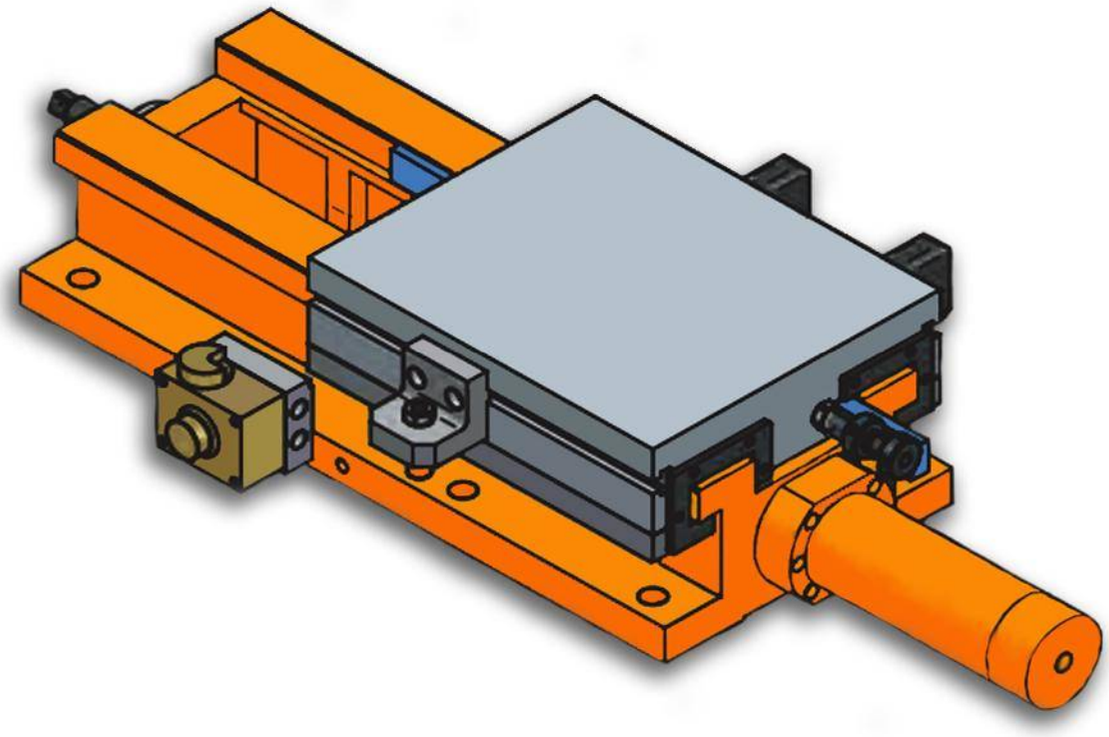

Characteristics & Dimensions

MODEL	HS250-300/420
Profile Width	*250.00*
A	*300.00*
B	*35.00*
C	*150.00*
C1	*200.00*
C2	-
C3	-
C4	-
C5	-
D	*35.00*
E ***(Profile Length)***	*420.00*
F ***(Lead Screw Pace)***	*6 - Ø18*
L ***(Piston Length)***	*65.00*
Maximum Stroke	*100.00*
Device Total Weight ***(kg)***	*82.00*

***** All dimensions are given in millimeters.*

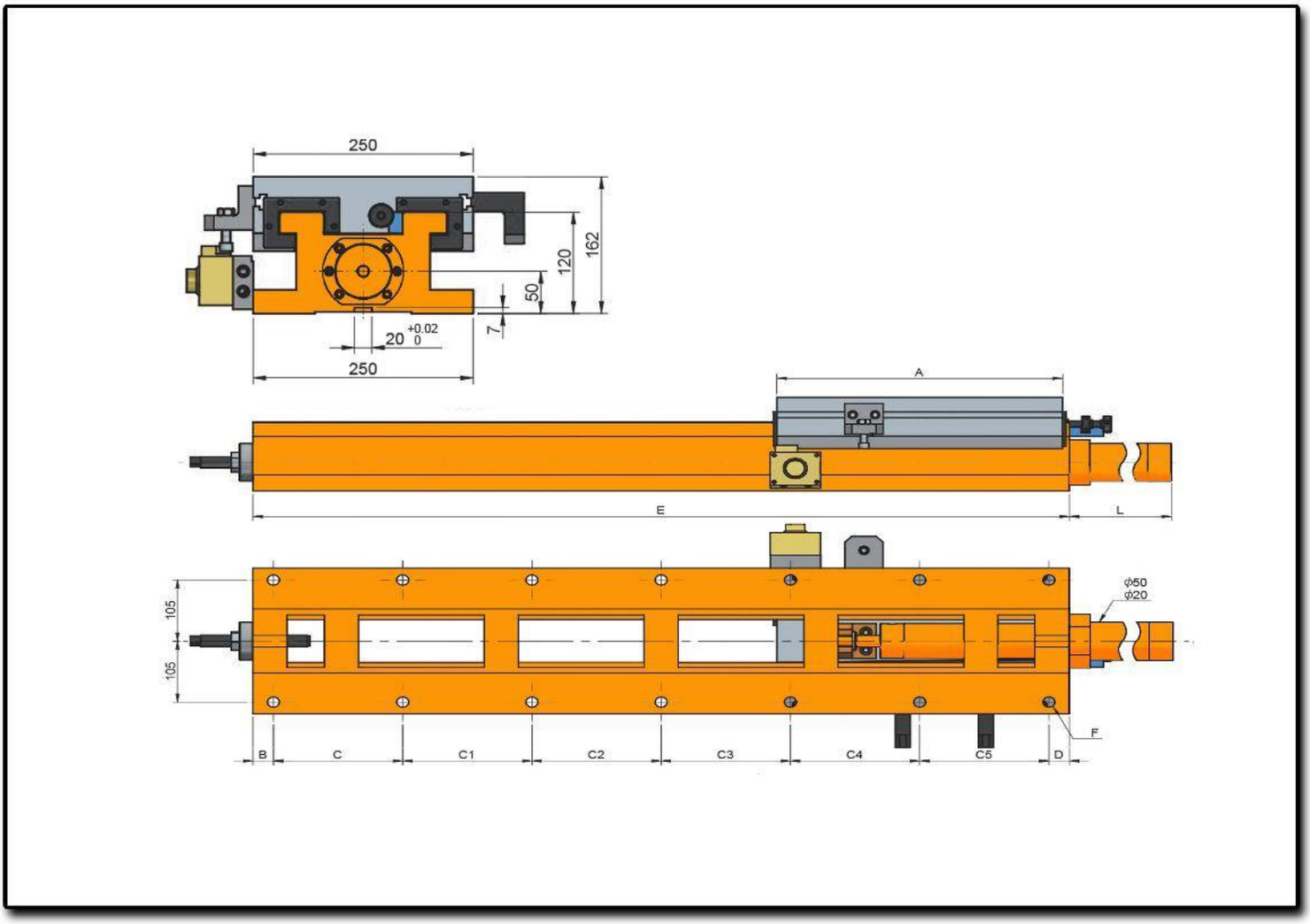
250
162
120
50
7
20 +0.02 0
250
A
E
L
105
105
ϕ50
ϕ20
F
B
C
C1
C2
C3
C4
C5
D

HS250-300/560

Hydraulic Slide

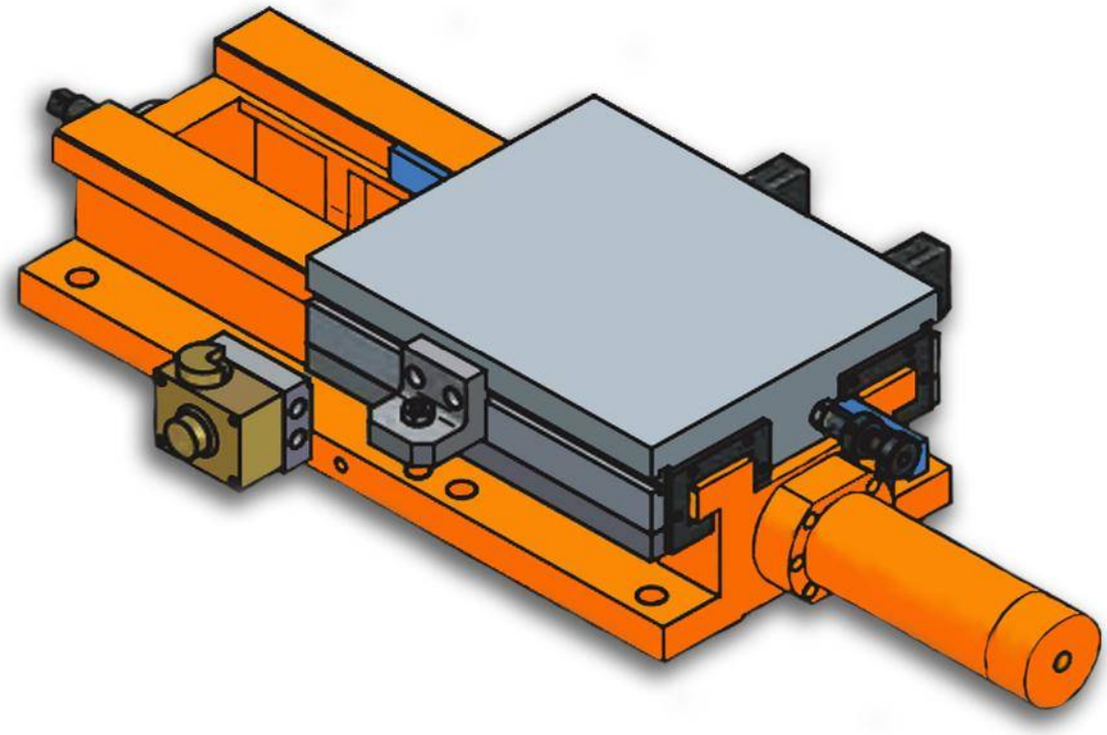

Characteristics & Dimensions

MODEL	HS250-300/560
Profile Width	*250.00*
A	*300.00*
B	*35.00*
C	*165.00*
C1	*165.00*
C2	*165.00*
C3	*-*
C4	*-*
C5	*-*
D	*30.00*
E ***(Profile Length)***	*560.00*
F ***(Lead Screw Pace)***	*8 - Ø18*
L ***(Piston Length)***	*222.00*
Maximum Stroke	*240.00*
Device Total Weight ***(kg)***	*90.00*

***** All dimensions are given in millimeters.*

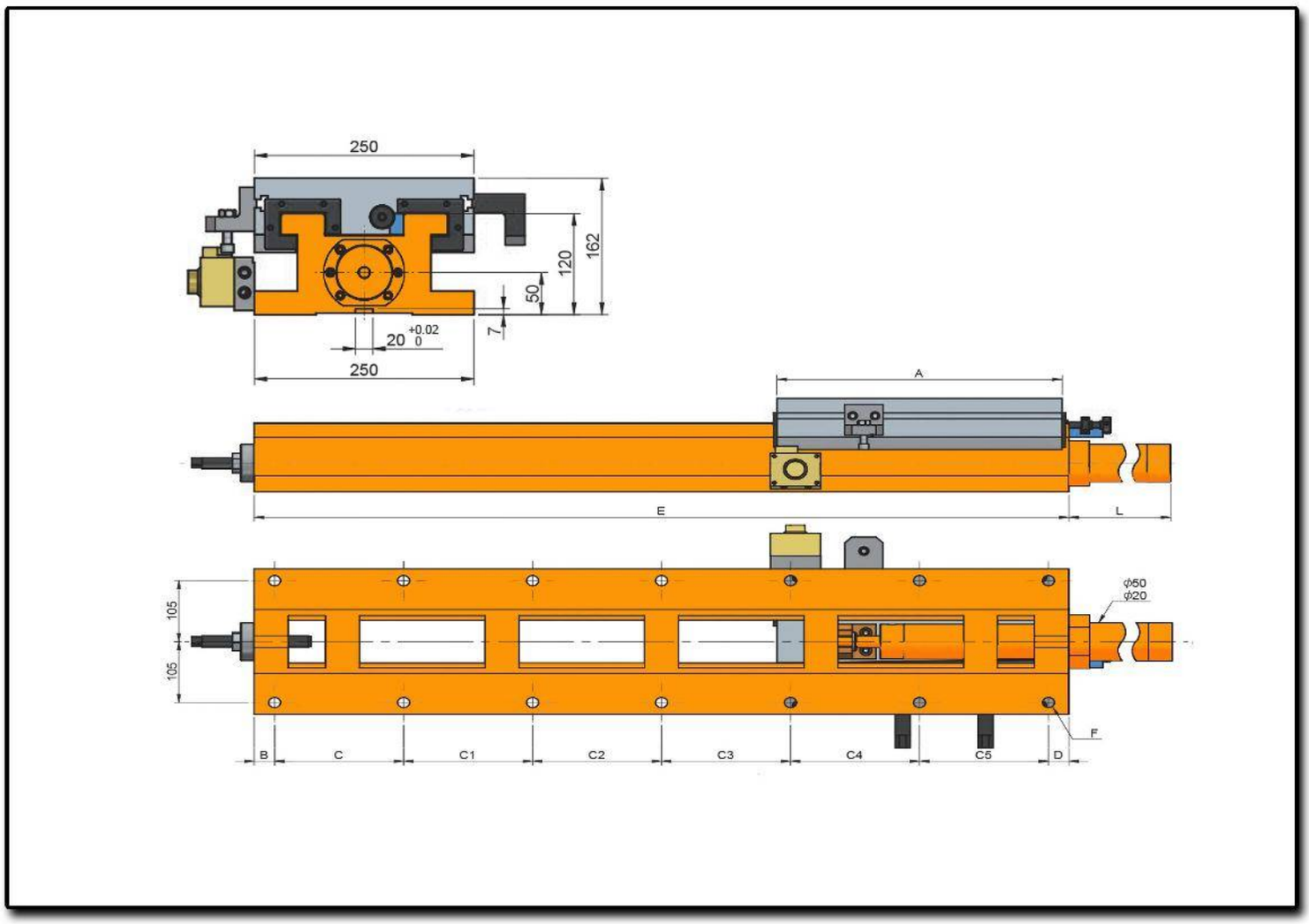
250
162
120
50
7
20 +0.02 0
250
A
E
L
105
105
ϕ50
ϕ20
F
B
C
C1
C2
C3
C4
C5
D

HS250-420/560

Hydraulic Slide

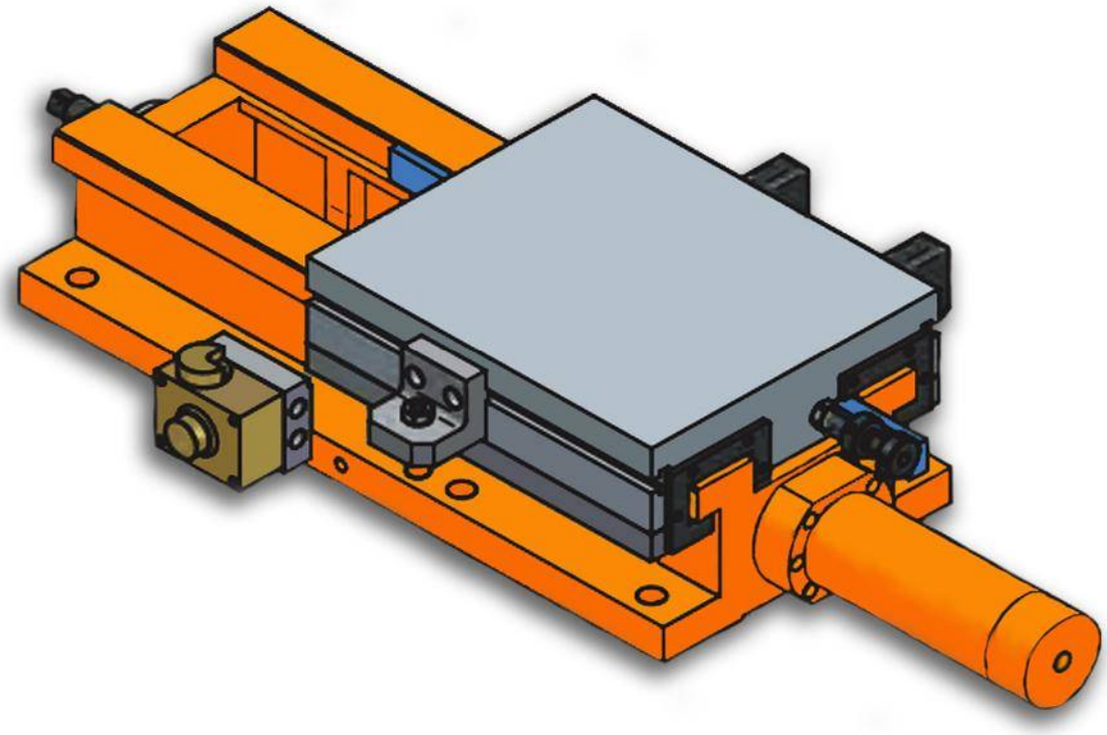

Characteristics & Dimensions

MODEL	HS250-420/560
Profile Width	*250.00*
A	*420.00*
B	*35.00*
C	*165.00*
C1	*165.00*
C2	*165.00*
C3	*-*
C4	*-*
C5	*-*
D	*30.00*
E ***(Profile Length)***	*560.00*
F ***(Lead Screw Pace)***	*8 - Ø18*
L ***(Piston Length)***	*65.00*
Maximum Stroke	*120.00*
Device Total Weight ***(kg)***	*94.00*

***** All dimensions are given in millimeters.*

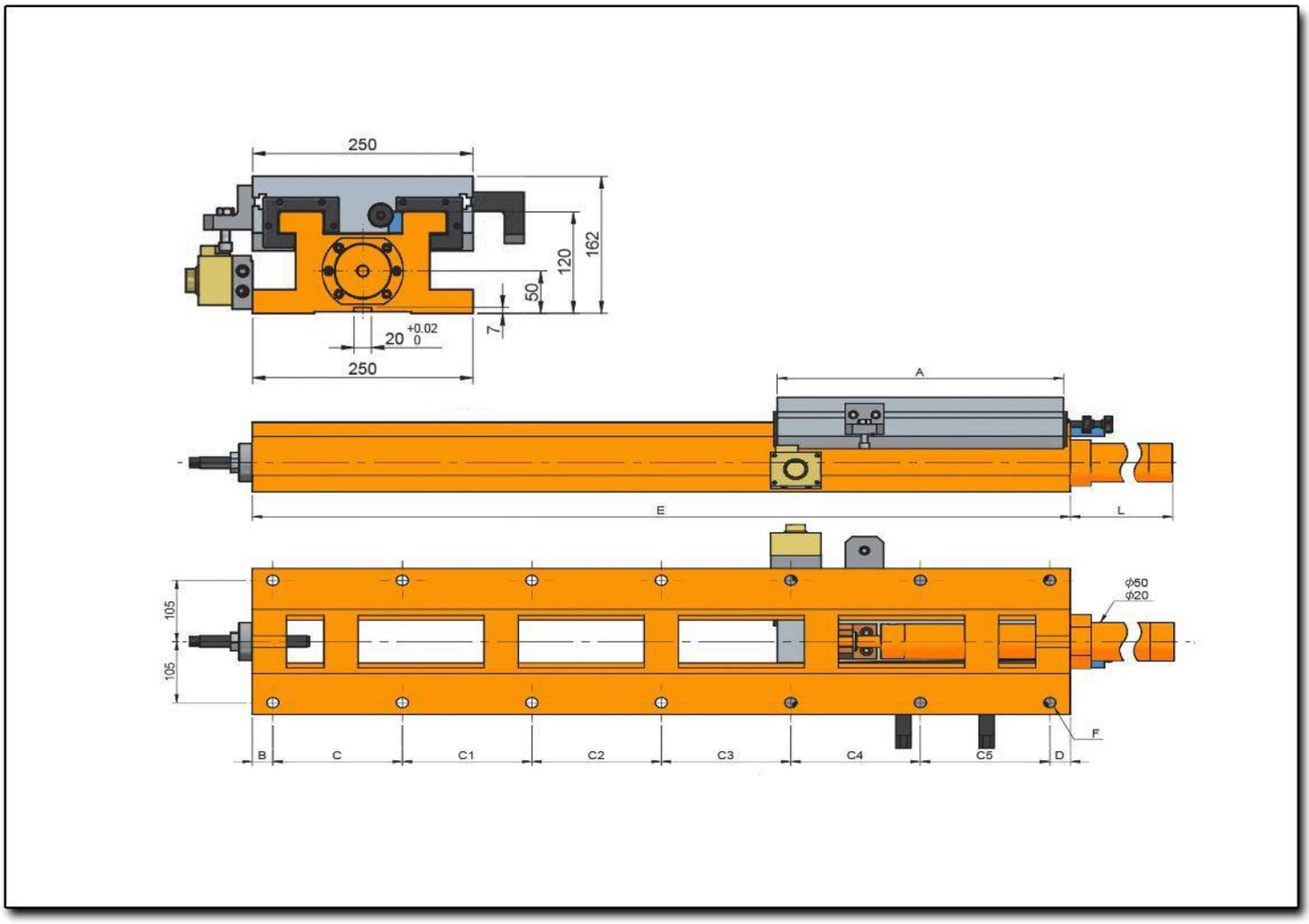
250
162
120
50
7
20 +0.02 0
250
A
E
L
105
105
ϕ50
ϕ20
F
B
C
C1
C2
C3
C4
C5
D

HS250-420/670

Hydraulic Slide

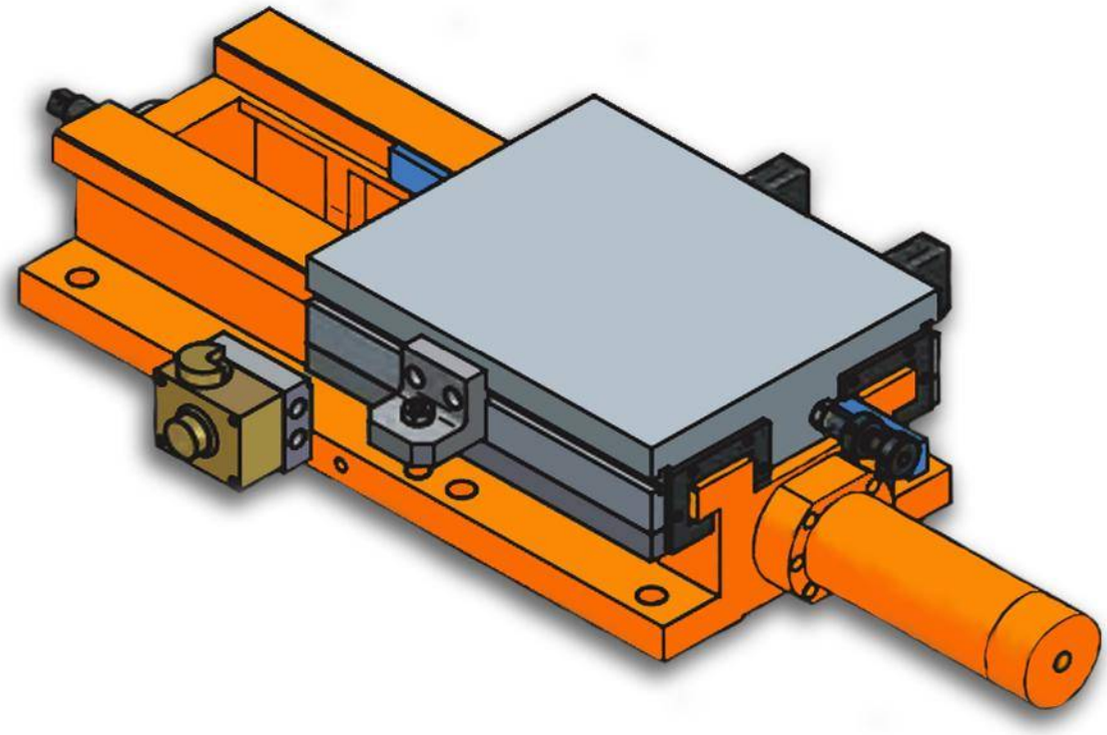

Characteristics & Dimensions

MODEL	HS250-420/670
Profile Width	*250.00*
A	*420.00*
B	*35.00*
C	*140.00*
C1	*140.00*
C2	*140.00*
C3	*180.00*
C4	*-*
C5	*-*
D	*35.00*
E ***(Profile Length)***	*670.00*
F ***(Lead Screw Pace)***	*10 - Ø18*
L ***(Piston Length)***	*87.00*
Maximum Stroke	*230.00*
Device Total Weight ***(kg)***	*110.00*

***** All dimensions are given in millimeters.*

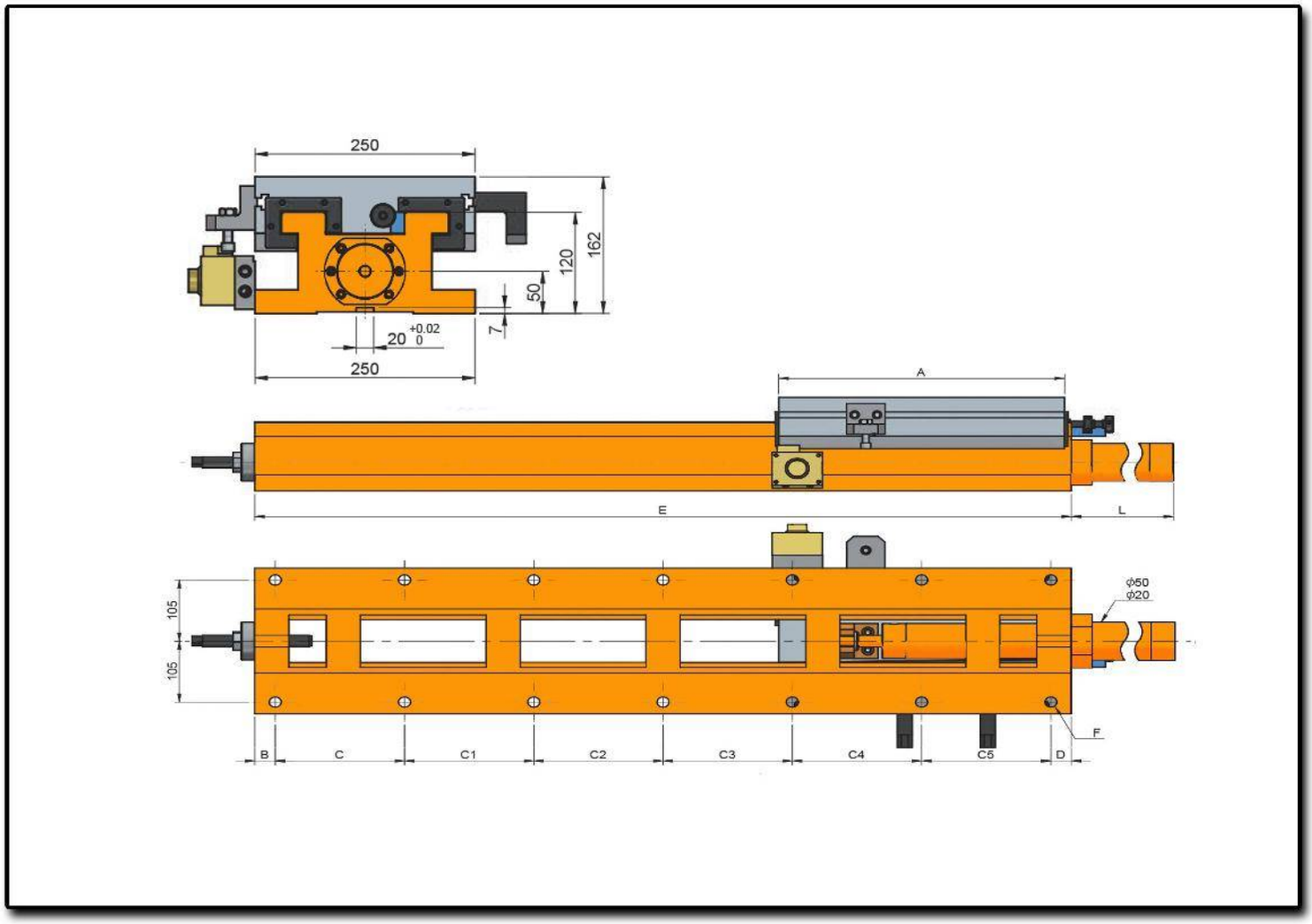
250
162
120
50
7
20 +0.02 0
250
A
E
L
105
105
ϕ50
ϕ20
F
B
C
C1
C2
C3
C4
C5
D

HS250-420/750

Hydraulic Slide

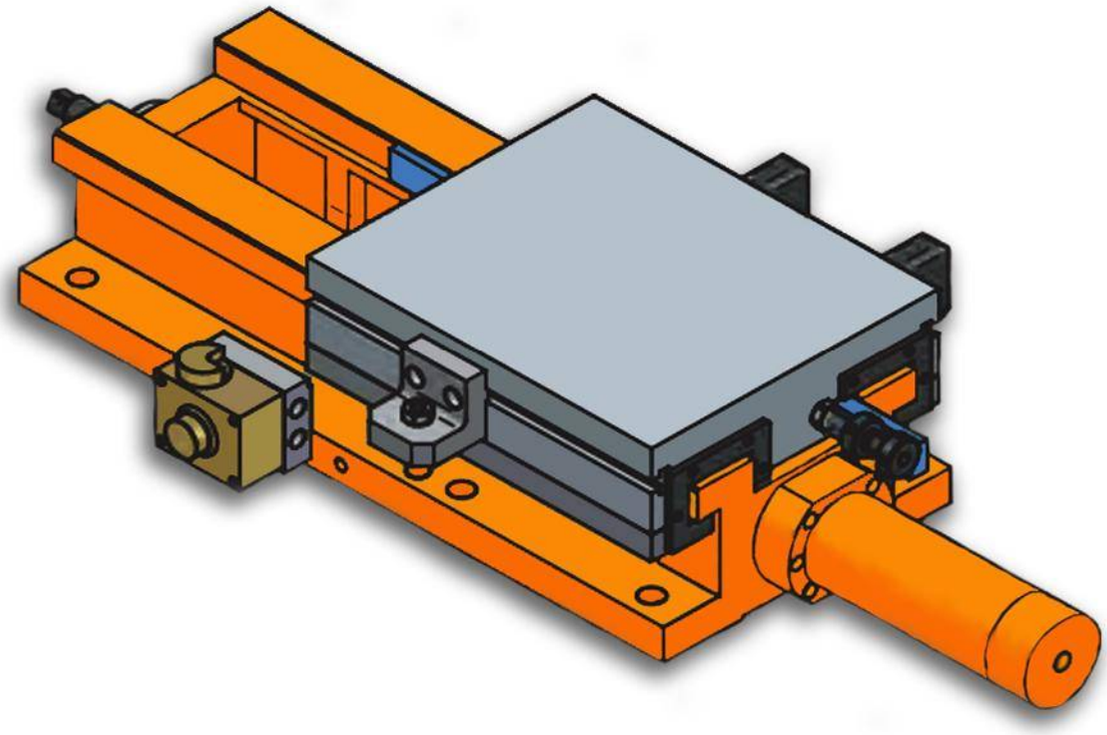

Characteristics & Dimensions

MODEL	HS250-420/750
Profile Width	*250.00*
A	*420.00*
B	*25.00*
C	*140.00*
C1	*140.00*
C2	*140.00*
C3	*140.00*
C4	*140.00*
C5	*-*
D	*25.00*
E (Profile Length)	*750.00*
F (Lead Screw Pace)	*12 - Ø18*
L (Piston Length)	*172.00*
Maximum Stroke	*310.00*
Device Total Weight (kg)	*130.00*

***** All dimensions are given in millimeters.*

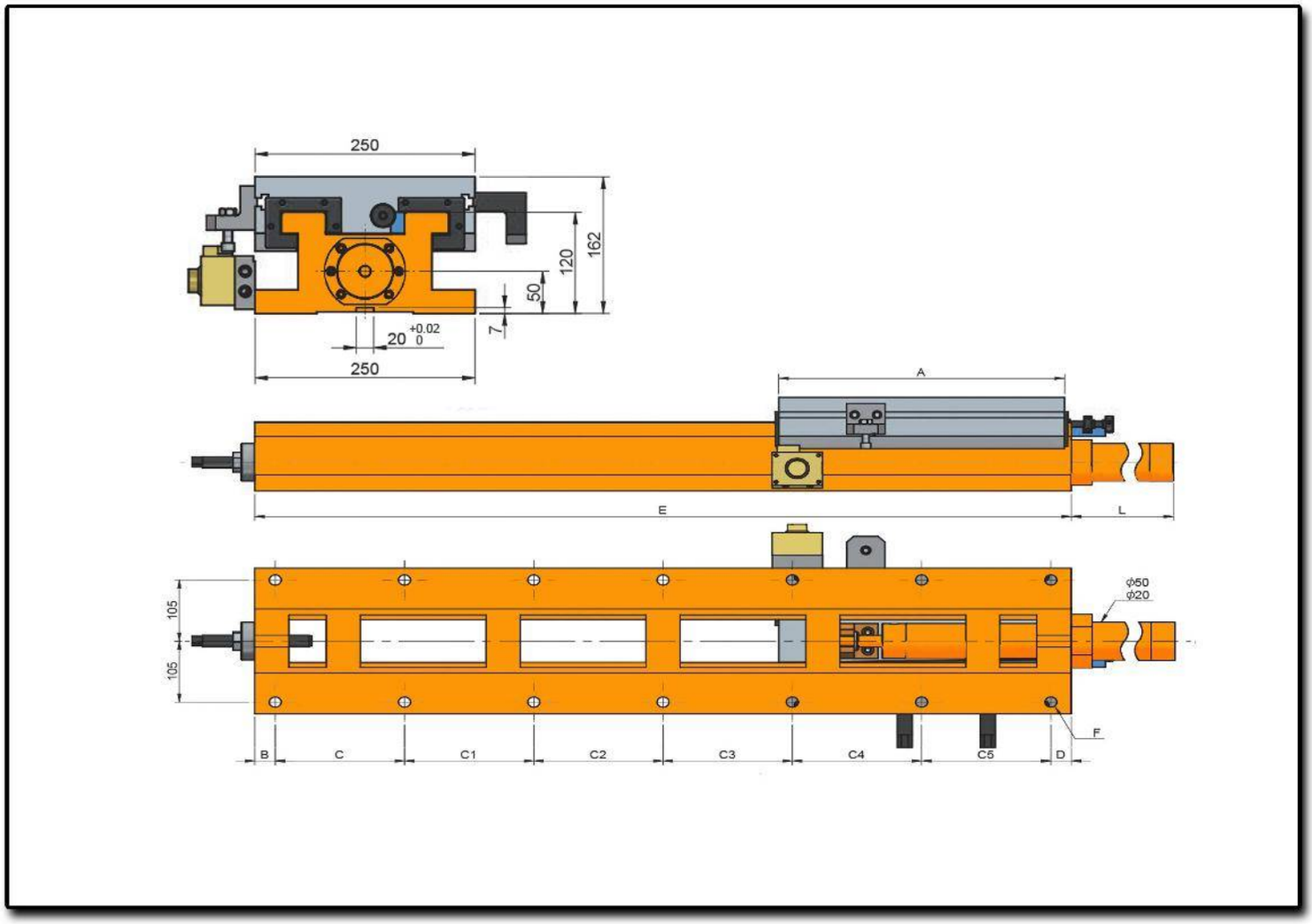
250
162
120
50
7
20 +0.02 0
250
A
E
L
105
105
ϕ50
ϕ20
F
B
C
C1
C2
C3
C4
C5
D

HS250-420/940

Hydraulic Slide

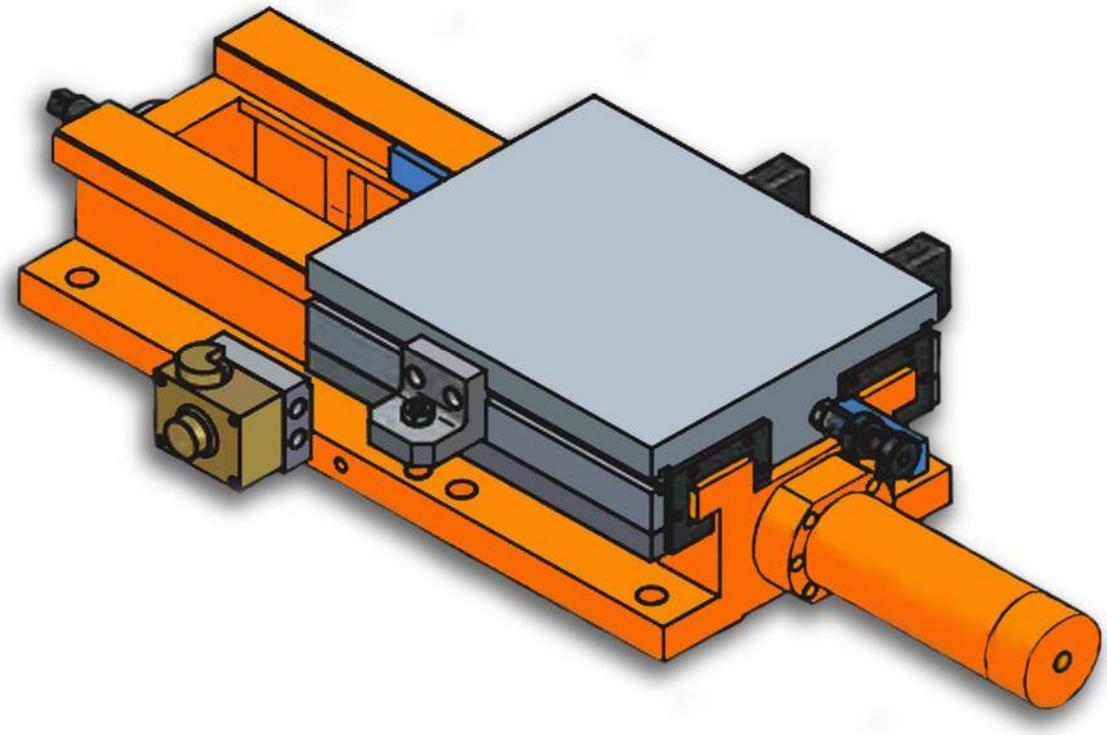

Characteristics & Dimensions

MODEL	HS250-420/940
Profile Width	*250.00*
A	*420.00*
B	*35.00*
C	*175.00*
C1	*175.00*
C2	*175.00*
C3	*175.00*
C4	*175.00*
C5	*-*
D	*30.00*
E ***(Profile Length)***	*940.00*
F ***(Lead Screw Pace)***	*12 - Ø18*
L ***(Piston Length)***	*362.00*
Maximum Stroke	*500.00*
Device Total Weight ***(kg)***	*155.00*

***** All dimensions are given in millimeters.*

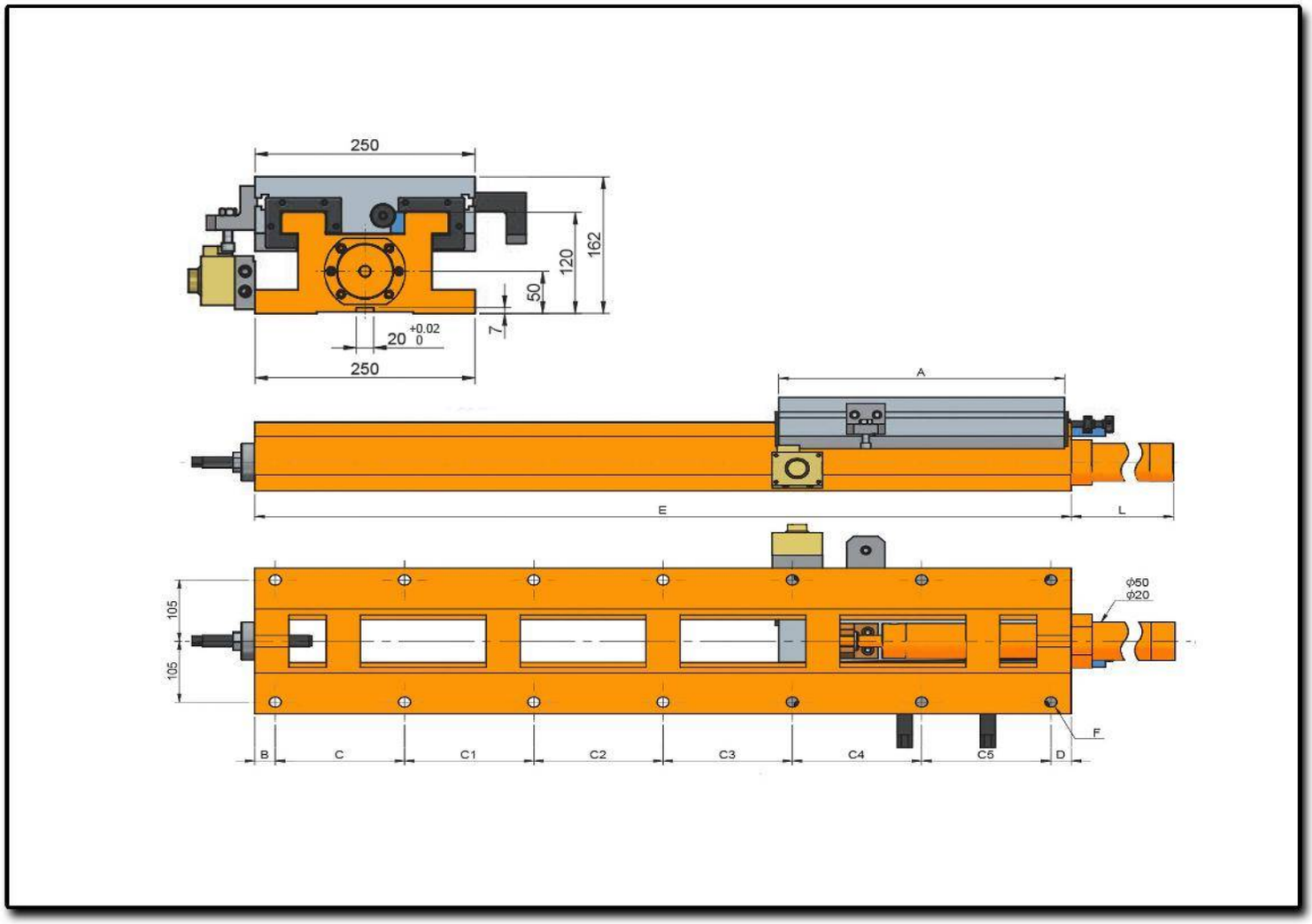
250
162
120
50
7
20 +0.02 0
250
A
E
L
105
105
ϕ50
ϕ20
F
B
C
C1
C2
C3
C4
C5
D

HS250-420/1200

Hydraulic Slide

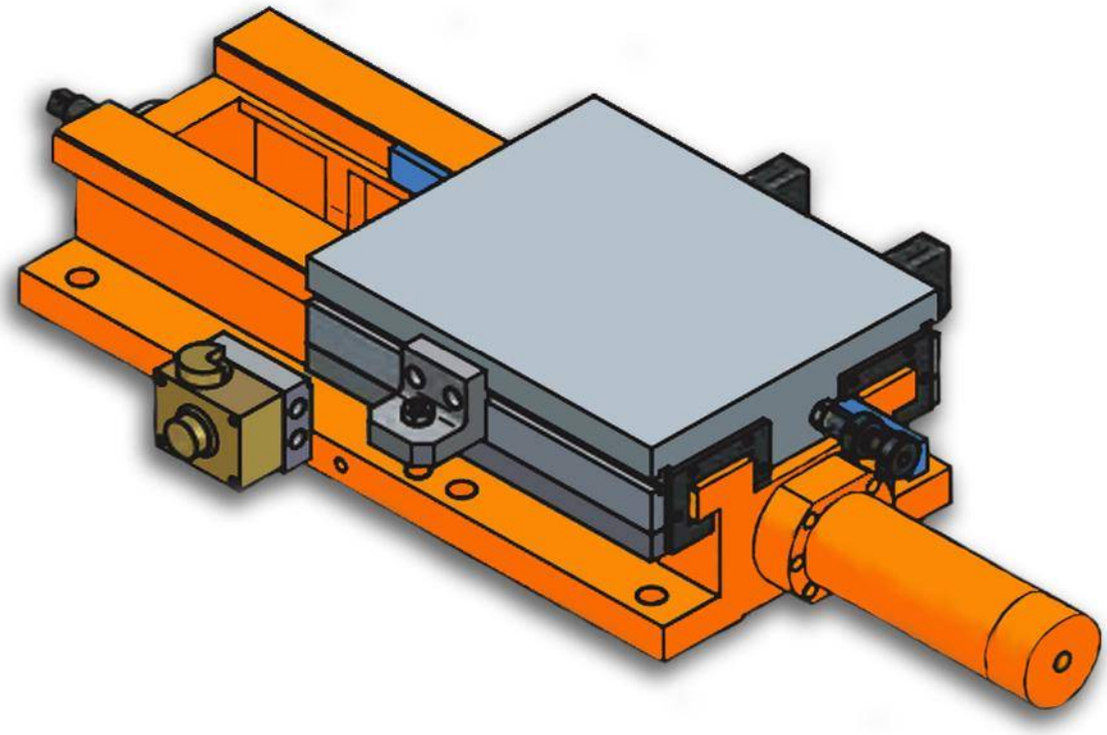

Characteristics & Dimensions

MODEL	HS250-420/1200
Profile Width	*250.00*
A	*420.00*
B	*30.00*
C	*190.00*
C1	*190.00*
C2	*190.00*
C3	*190.00*
C4	*190.00*
C5	*190.00*
D	*30.00*
E ***(Profile Length)***	*1200.00*
F ***(Lead Screw Pace)***	*14 - Ø18*
L ***(Piston Length)***	*622.00*
Maximum Stroke	*760.00*
Device Total Weight ***(kg)***	*192.00*

***** All dimensions are given in millimeters.*

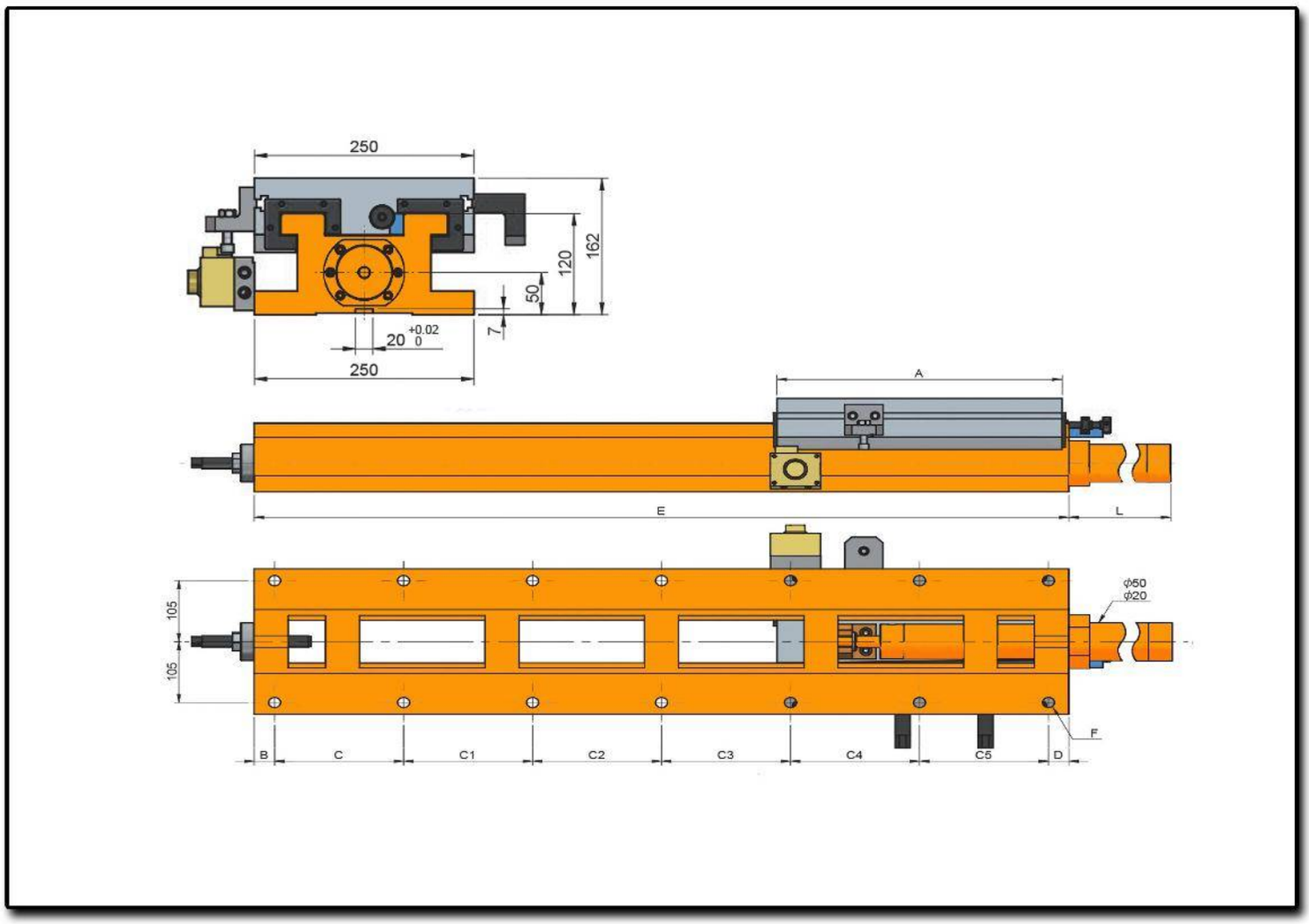
250
162
120
50
7
20 +0.02 0
250
A
E
L
105
105
ϕ50
ϕ20
F
B
C
C1
C2
C3
C4
C5
D

HS300-300/420

Hydraulic Slide

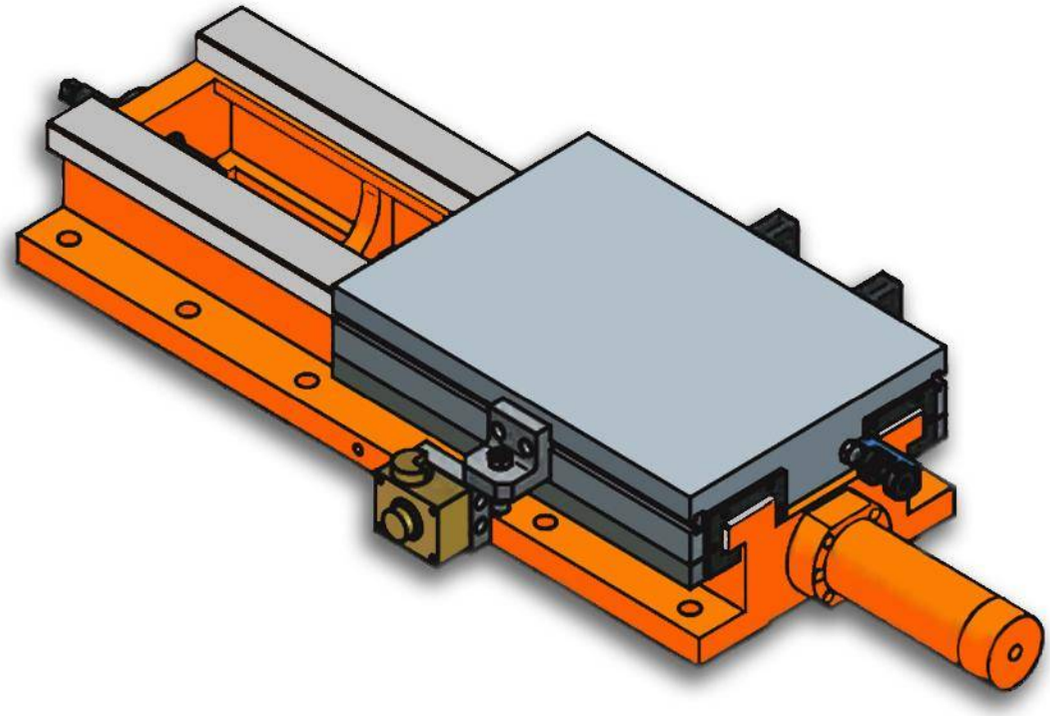

Characteristics & Dimensions

MODEL	HS300-300/420
Profile Width	*300.00*
A	*300.00*
B	*35.00*
C	*150.00*
C1	*200.00*
C2	-
C3	-
C4	-
C5	-
D	*35.00*
E ***(Profile Length)***	*420.00*
F ***(Lead Screw Pace)***	*6 - Ø18*
L ***(Piston Length)***	*65.00*
Maximum Stroke	*100.00*
Device Total Weight ***(kg)***	*100.00*

***** All dimensions are given in millimeters.*

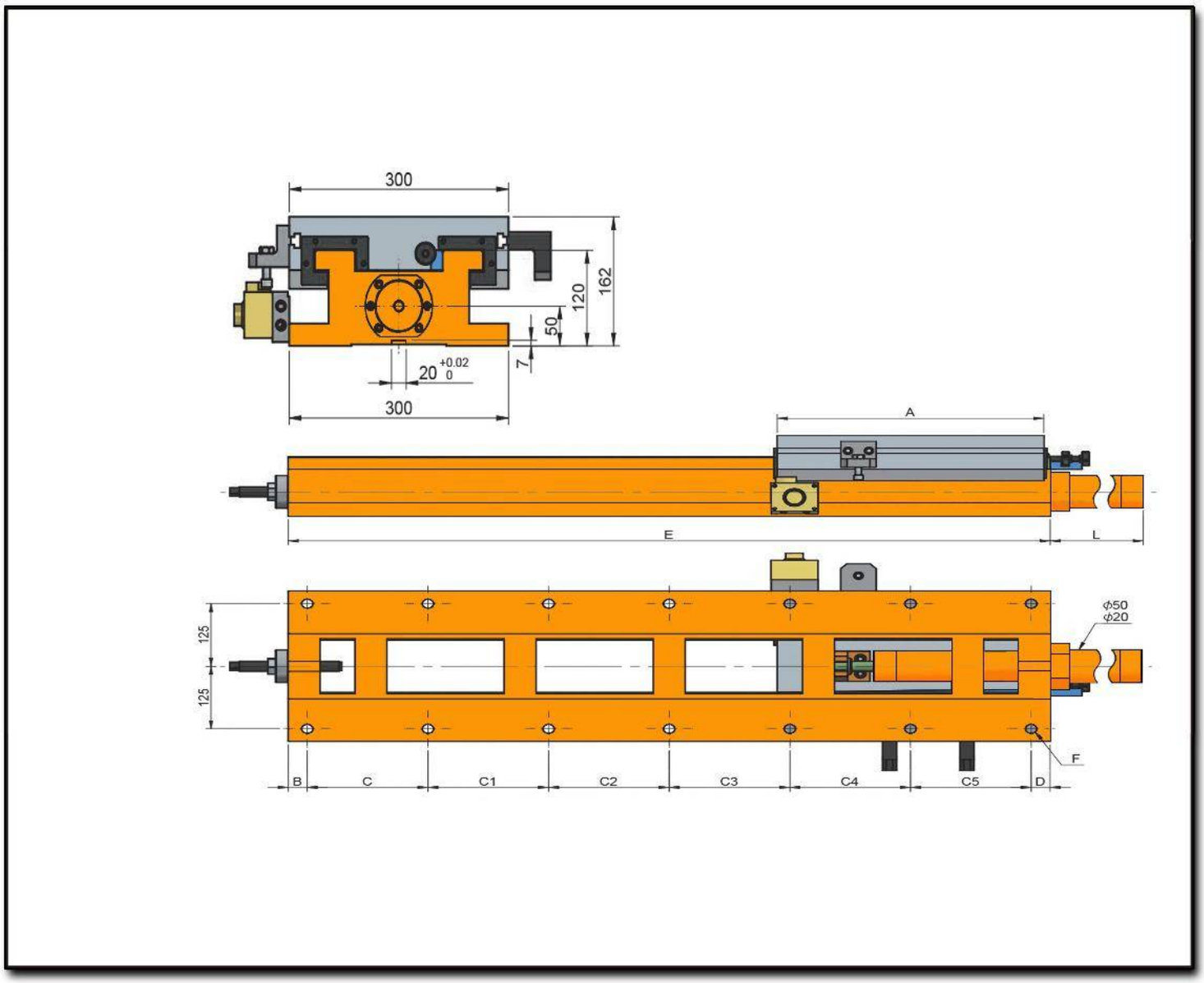
300
120
162
50
7
20 +0.02 0
300
A
E
L
125
125
ϕ50
ϕ20
F
B
C
C1
C2
C3
C4
C5
D

HS300-360/560

Hydraulic Slide

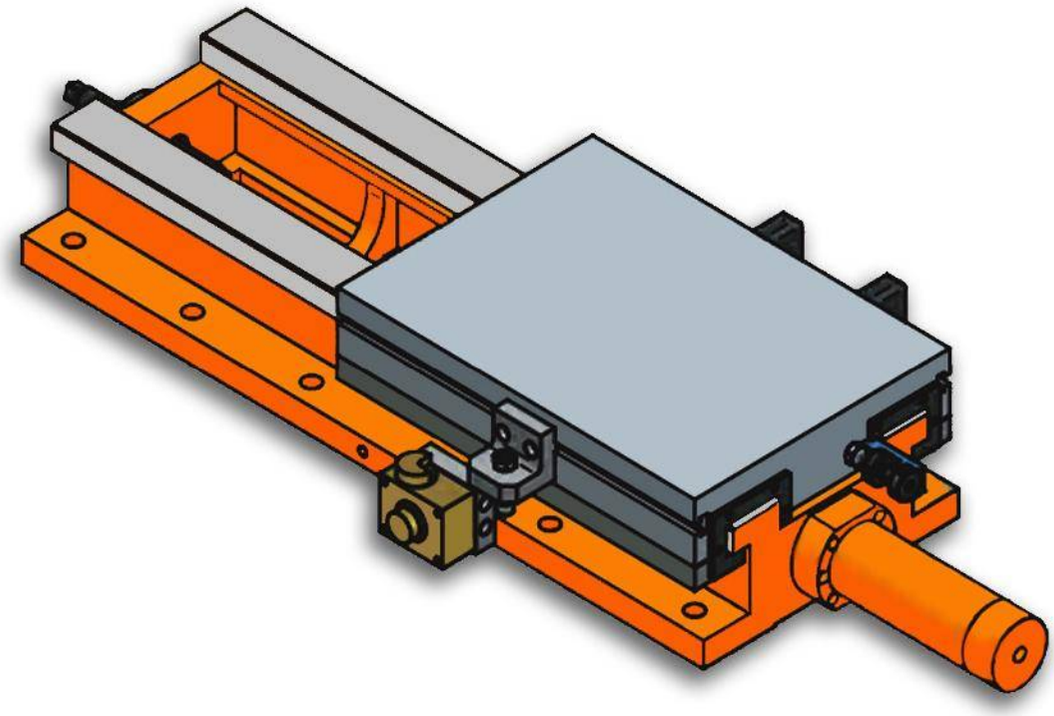

Characteristics & Dimensions

MODEL	HS300-360/560
Profile Width	*300.00*
A	*360.00*
B	*35.00*
C	*165.00*
C1	*165.00*
C2	*165.00*
C3	*-*
C4	*-*
C5	*-*
D	*30.00*
E ***(Profile Length)***	*560.00*
F ***(Lead Screw Pace)***	*8 - Ø18*
L ***(Piston Length)***	*65.00*
Maximum Stroke	*180.00*
Device Total Weight ***(kg)***	*115.00*

***** All dimensions are given in millimeters.*

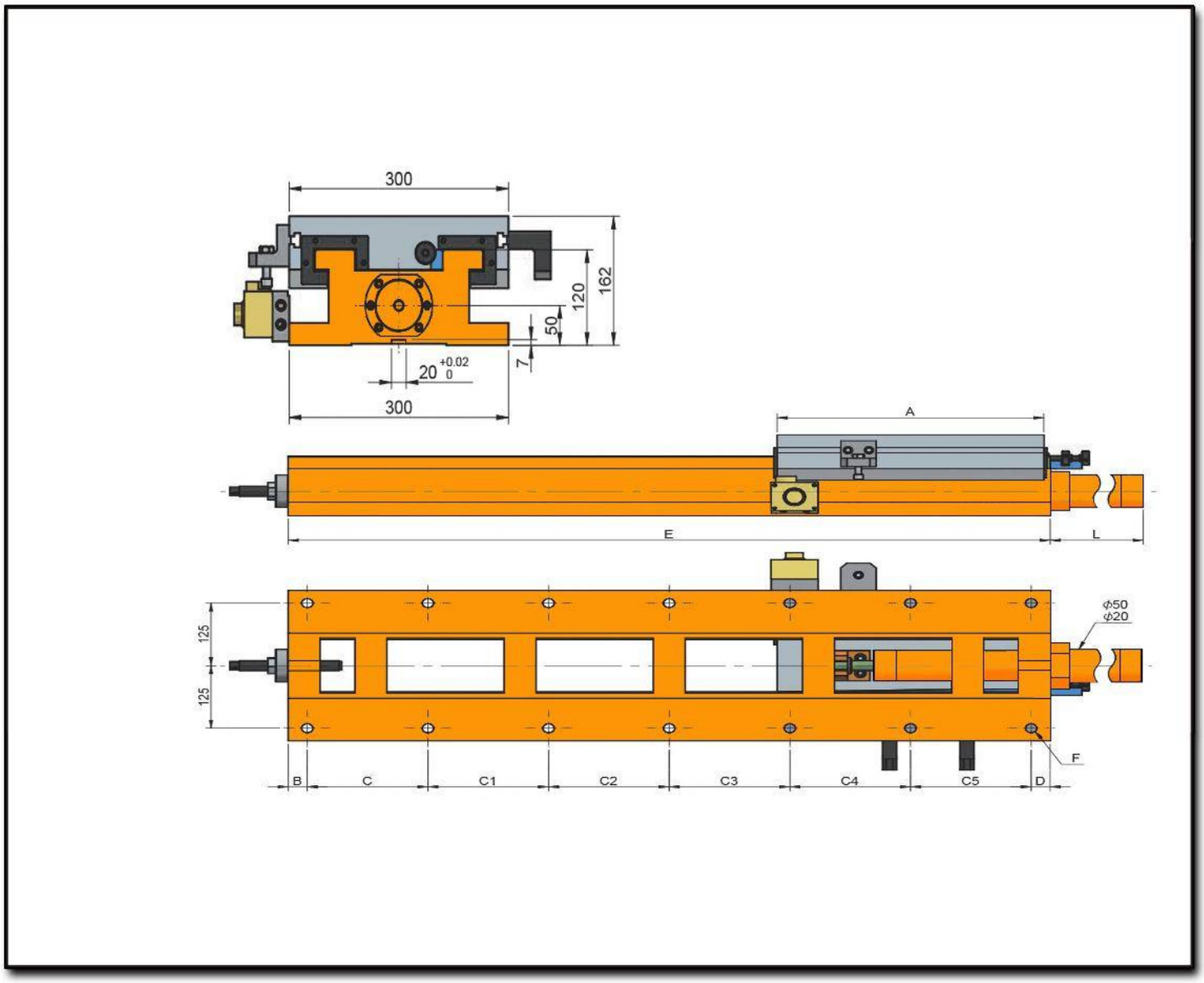
300
162
120
50
7
20 +0.02 0
300
A
E
L
125
125
ϕ50
ϕ20
F
B
C
C1
C2
C3
C4
C5
D

HS300-420/560

Hydraulic Slide

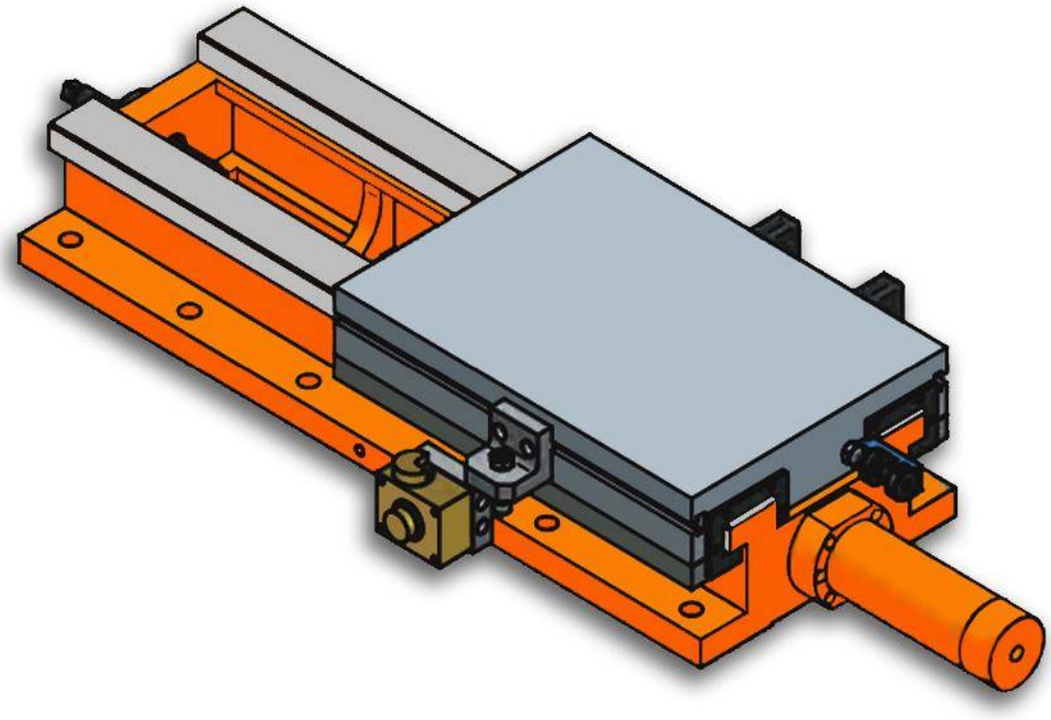

Characteristics & Dimensions

MODEL	HS300-420/560
Profile Width	*300.00*
A	*420.00*
B	*35.00*
C	*165.00*
C1	*165.00*
C2	*165.00*
C3	*-*
C4	*-*
C5	*-*
D	*30.00*
E ***(Profile Length)***	*560.00*
F ***(Lead Screw Pace)***	*8 - Ø18*
L ***(Piston Length)***	*65.00*
Maximum Stroke	*120.00*
Device Total Weight ***(kg)***	*117.00*

***** All dimensions are given in millimeters.*

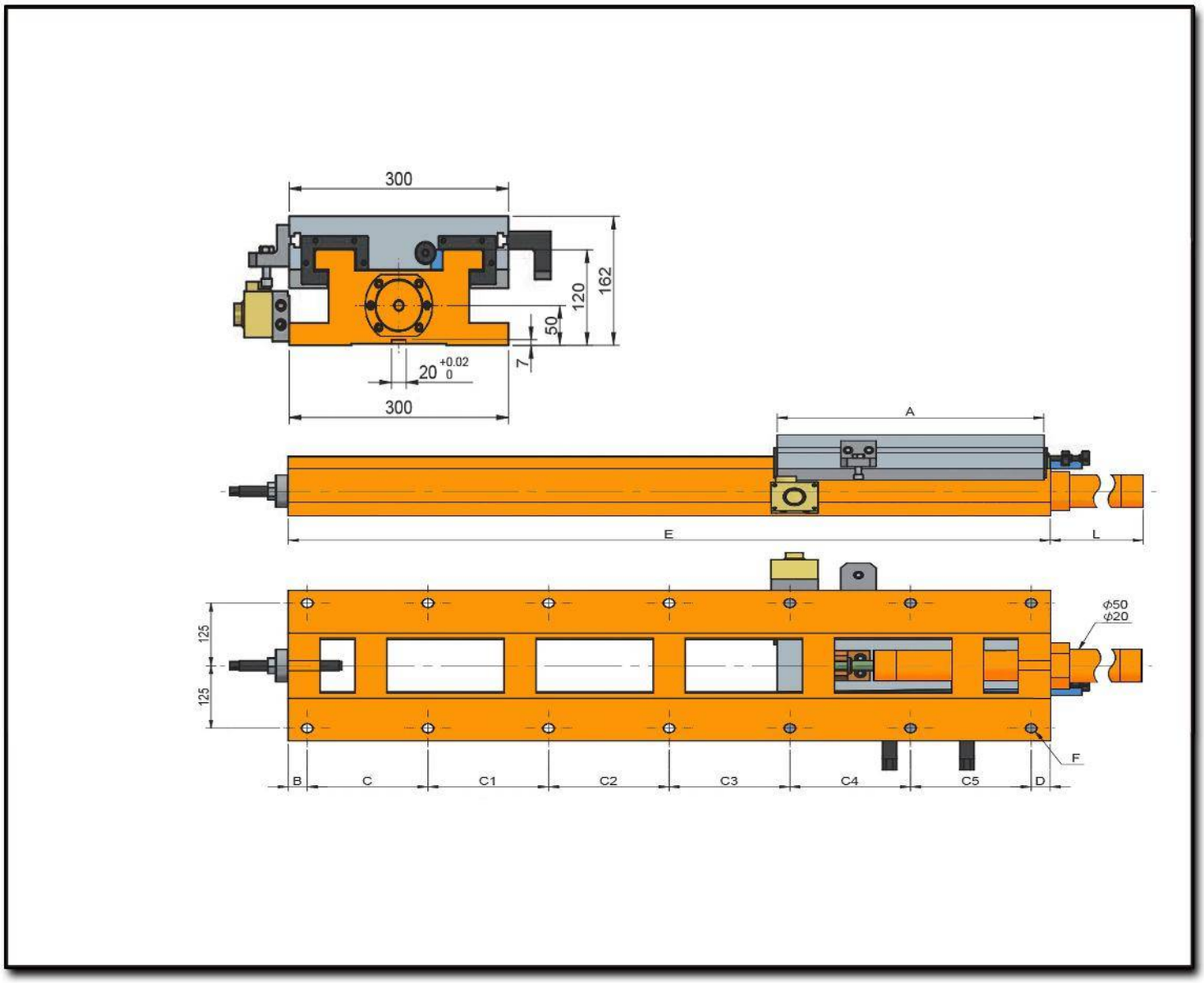
300
162
120
50
7
20 +0.02 0
300
A
E
L
125
125
ϕ50
ϕ20
F
B
C
C1
C2
C3
C4
C5
D

HS300-420/670

Hydraulic Slide

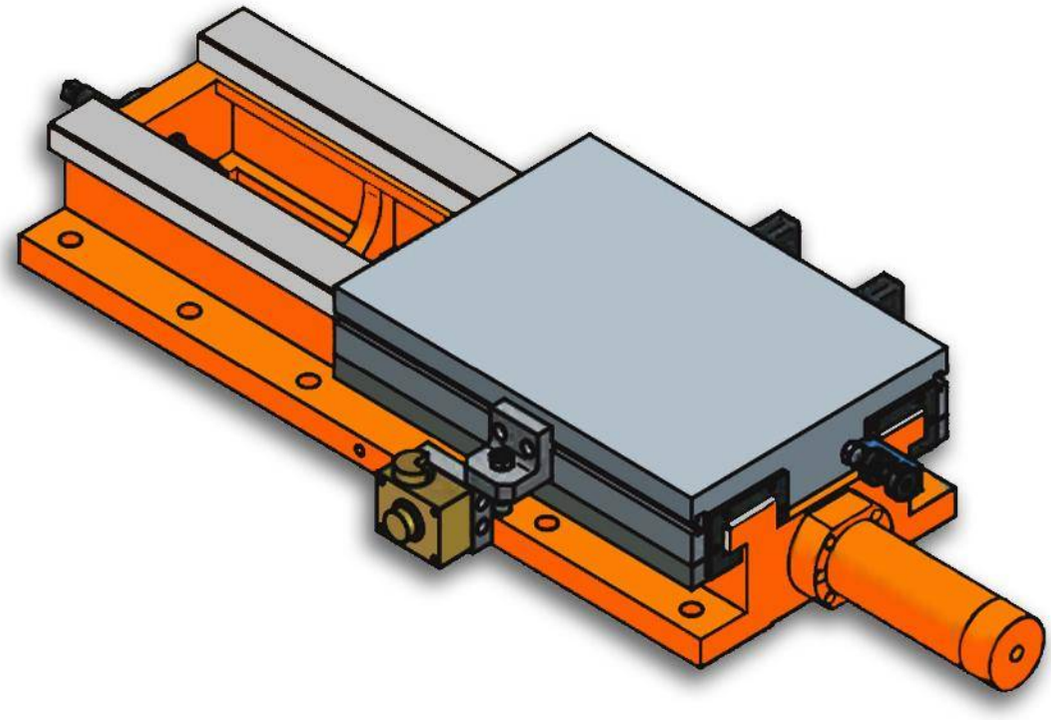

Characteristics & Dimensions

MODEL	HS300-420/670
Profile Width	*300.00*
A	*420.00*
B	*35.00*
C	*140.00*
C1	*140.00*
C2	*140.00*
C3	*180.00*
C4	*-*
C5	*-*
D	*35.00*
E ***(Profile Length)***	*670.00*
F ***(Lead Screw Pace)***	*10 - Ø18*
L ***(Piston Length)***	*65.00*
Maximum Stroke	*230.00*
Device Total Weight ***(kg)***	*135.00*

***** All dimensions are given in millimeters.*

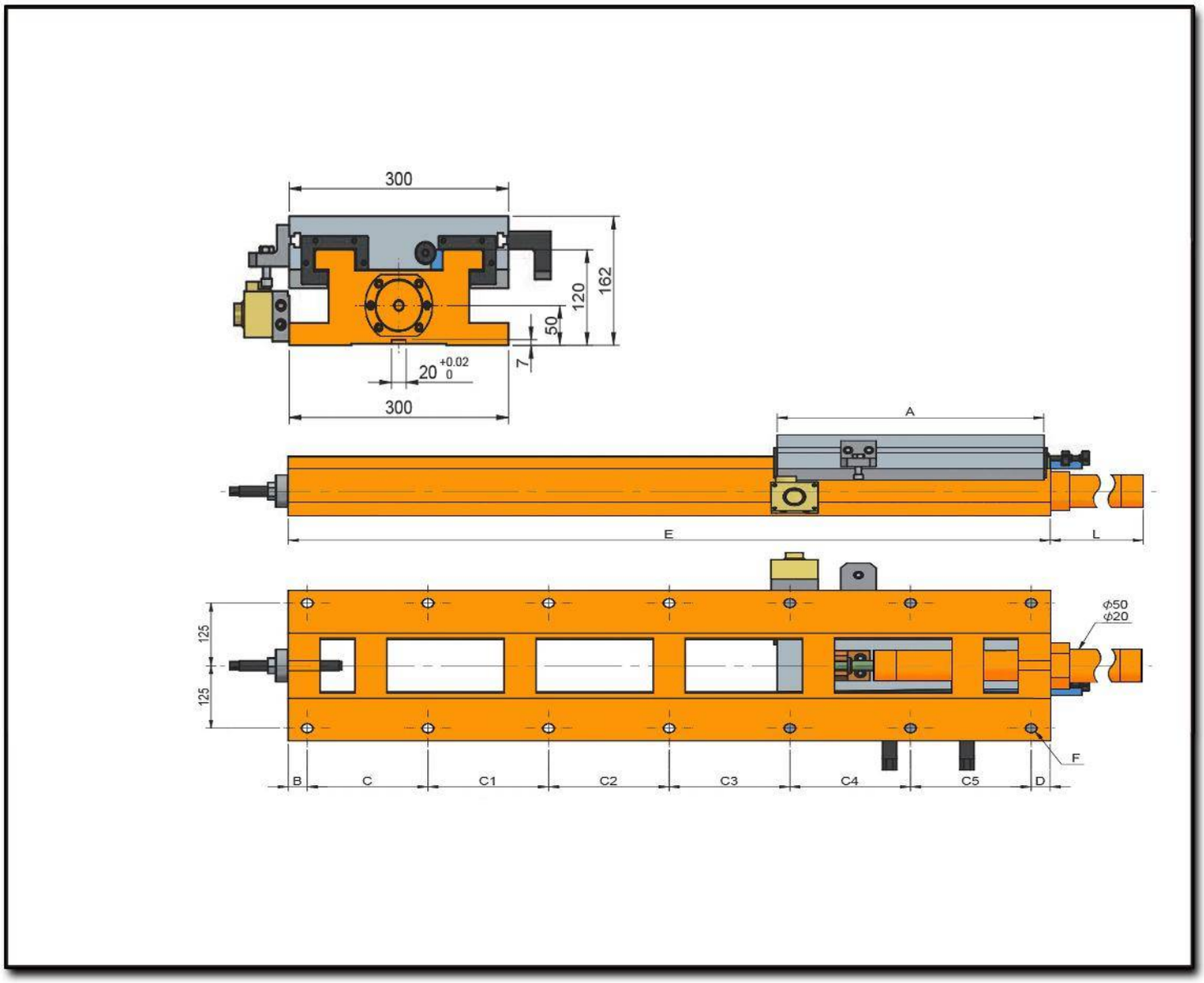
300
162
120
50
7
20 +0.02 0
300
A
E
L
125
125
ϕ50
ϕ20
F
B
C
C1
C2
C3
C4
C5
D

HS300-420/800

Hydraulic Slide

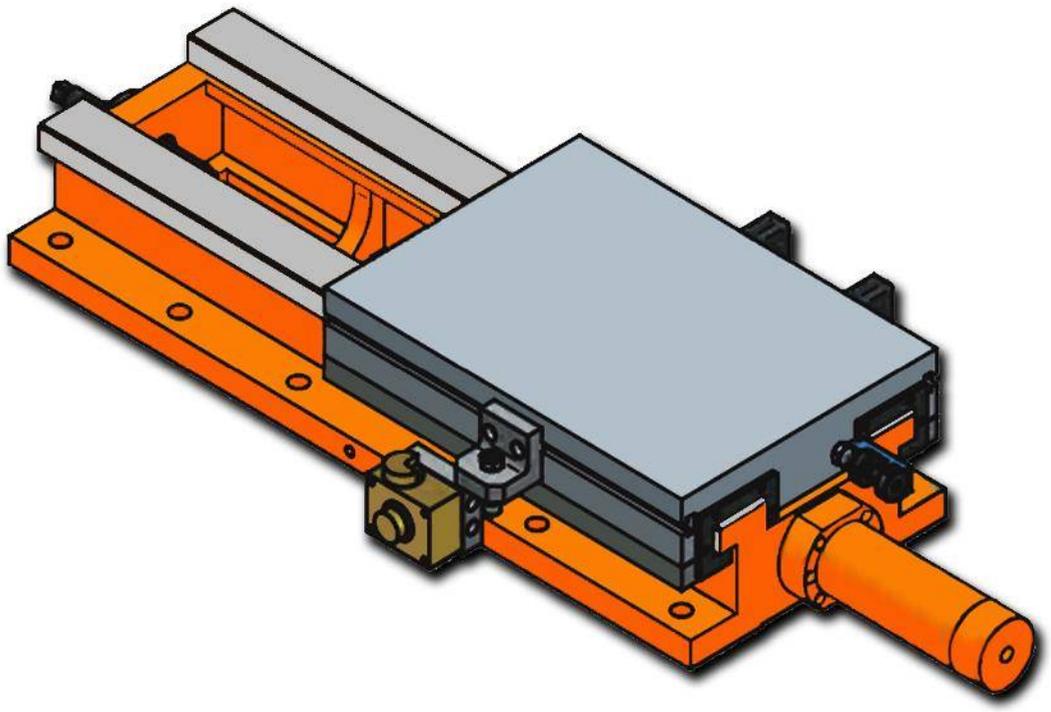

Characteristics & Dimensions

MODEL	HS300-420/800
Profile Width	*300.00*
A	*420.00*
B	*35.00*
C	*140.00*
C1	*140.00*
C2	*140.00*
C3	*140.00*
C4	*170.00*
C5	*-*
D	*35.00*
E ***(Profile Length)***	*800.00*
F ***(Lead Screw Pace)***	*12 - Ø18*
L ***(Piston Length)***	*222.00*
Maximum Stroke	*360.00*
Device Total Weight ***(kg)***	*185.00*

***** All dimensions are given in millimeters.*

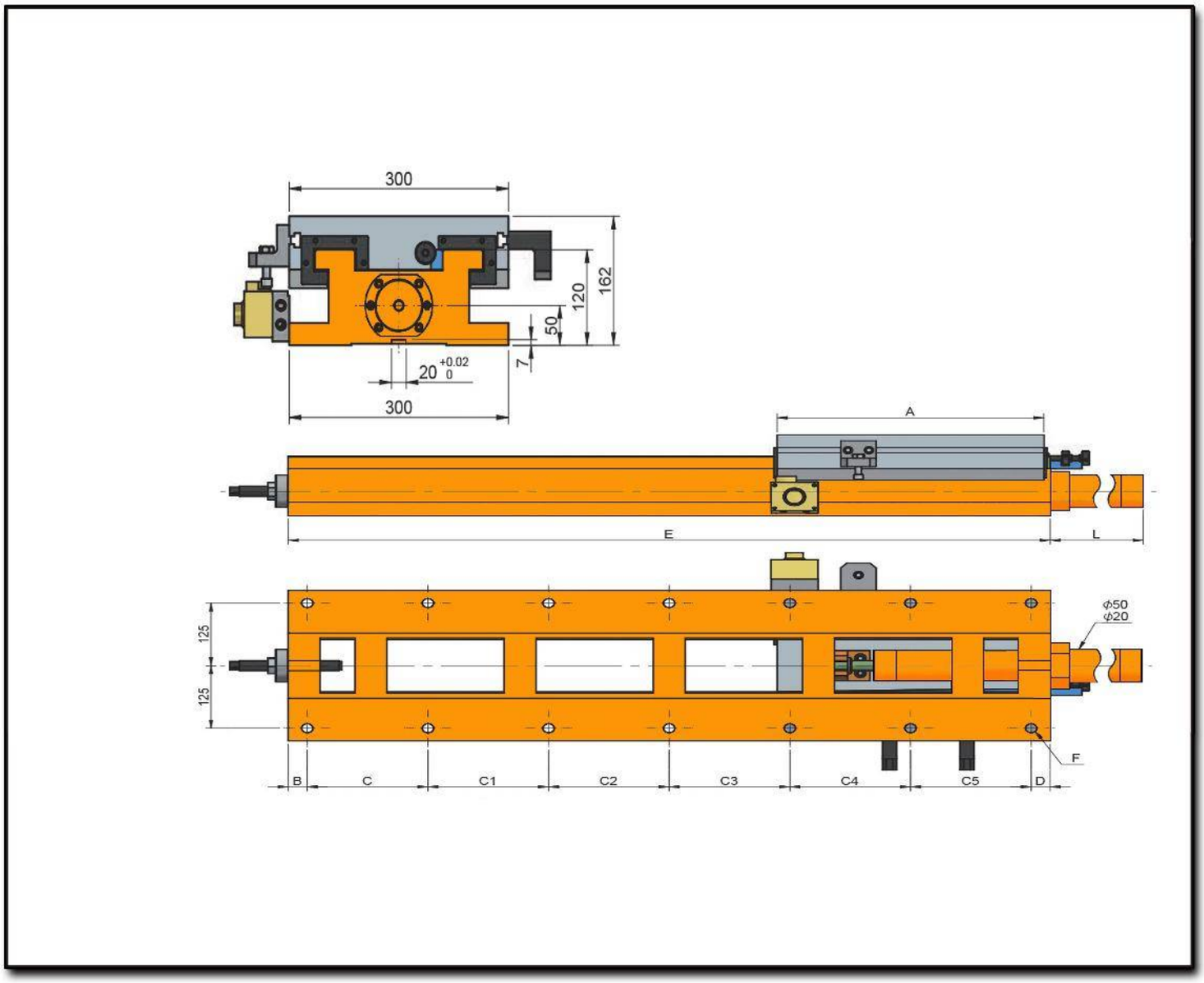
300
162
120
50
7
20 +0.02 0
300
A
E
L
125
125
ϕ50
ϕ20
F
B
C
C1
C2
C3
C4
C5
D

HS300-420/940

Hydraulic Slide

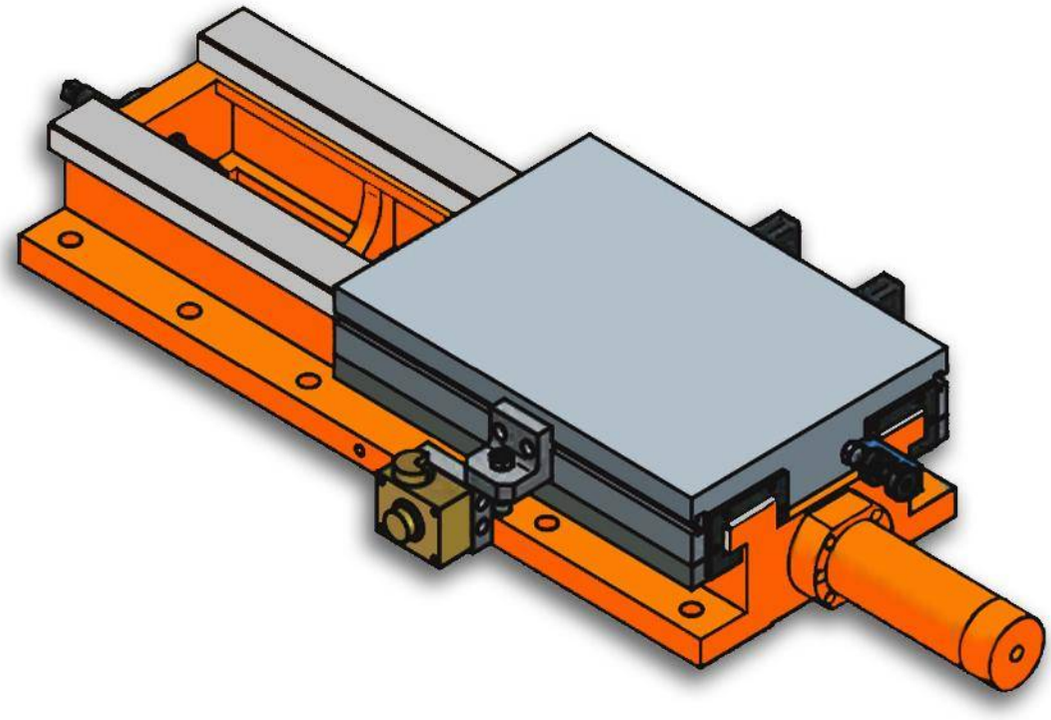

Characteristics & Dimensions

MODEL	HS300-420/940
Profile Width	*300.00*
A	*420.00*
B	*35.00*
C	*175.00*
C1	*175.00*
C2	*175.00*
C3	*175.00*
C4	*175.00*
C5	*-*
D	*30.00*
E ***(Profile Length)***	*940.00*
F ***(Lead Screw Pace)***	*12 - Ø18*
L ***(Piston Length)***	*362.00*
Maximum Stroke	*500.00*
Device Total Weight ***(kg)***	*198.00*

***** All dimensions are given in millimeters.*

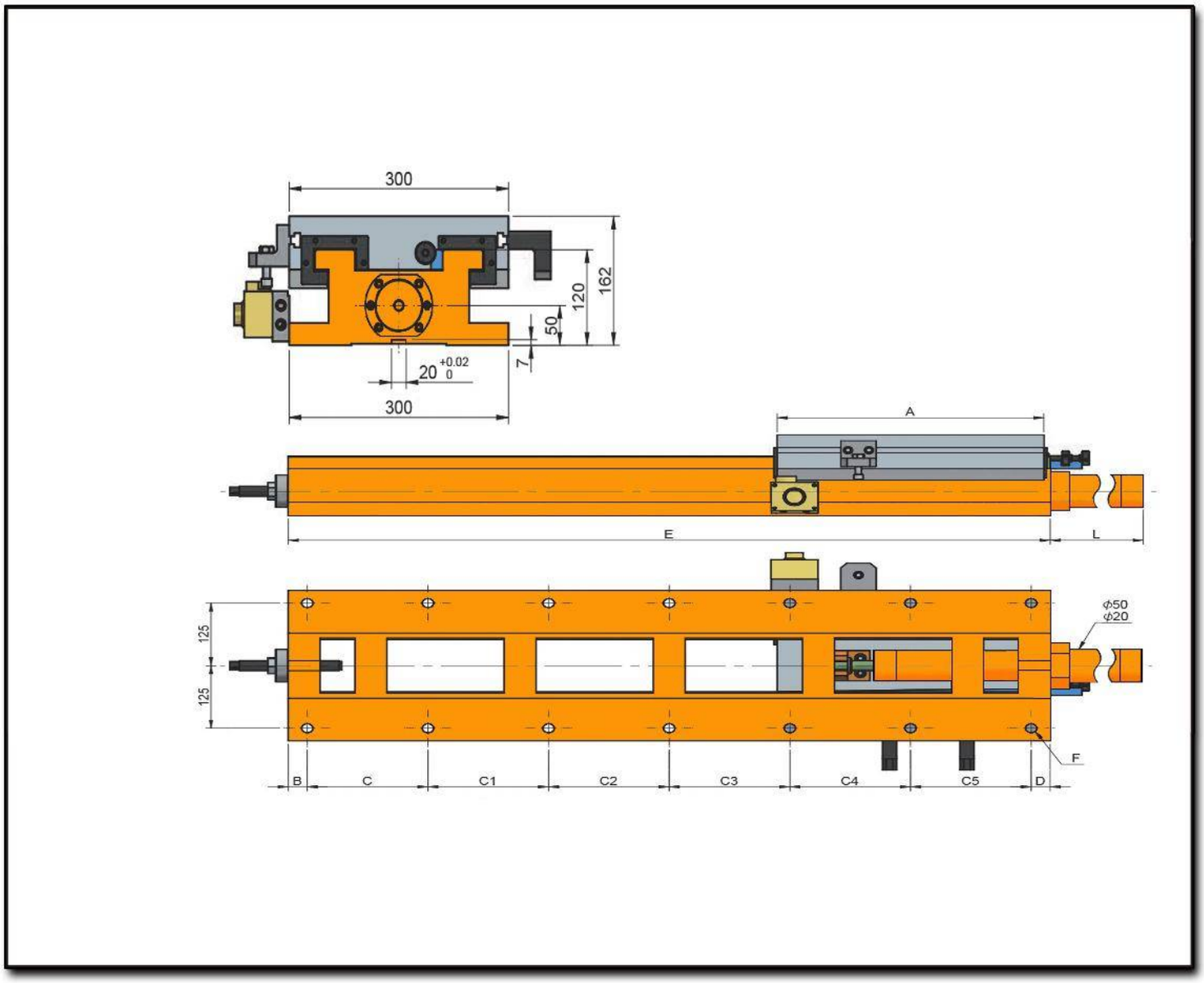
300
162
120
50
7
20 +0.02 0
300
A
E
L
125
125
ϕ50
ϕ20
F
B
C
C1
C2
C3
C4
C5
D

HS300-420/1200

Hydraulic Slide

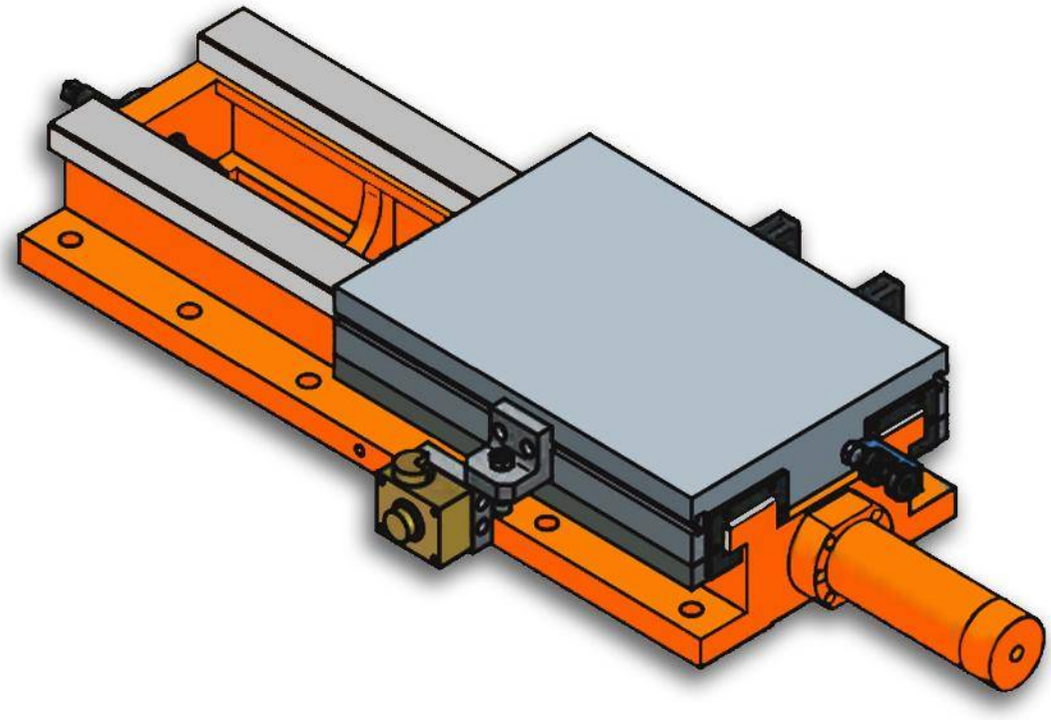

Characteristics & Dimensions

MODEL	HS300-420/1200
Profile Width	*300.00*
A	*420.00*
B	*30.00*
C	*190.00*
C1	*190.00*
C2	*190.00*
C3	*190.00*
C4	*190.00*
C5	*190.00*
D	*30.00*
E ***(Profile Length)***	*1200.00*
F ***(Lead Screw Pace)***	*14 - Ø18*
L ***(Piston Length)***	*622.00*
Maximum Stroke	*760.00*
Device Total Weight ***(kg)***	*210.00*

***** All dimensions are given in millimeters.*

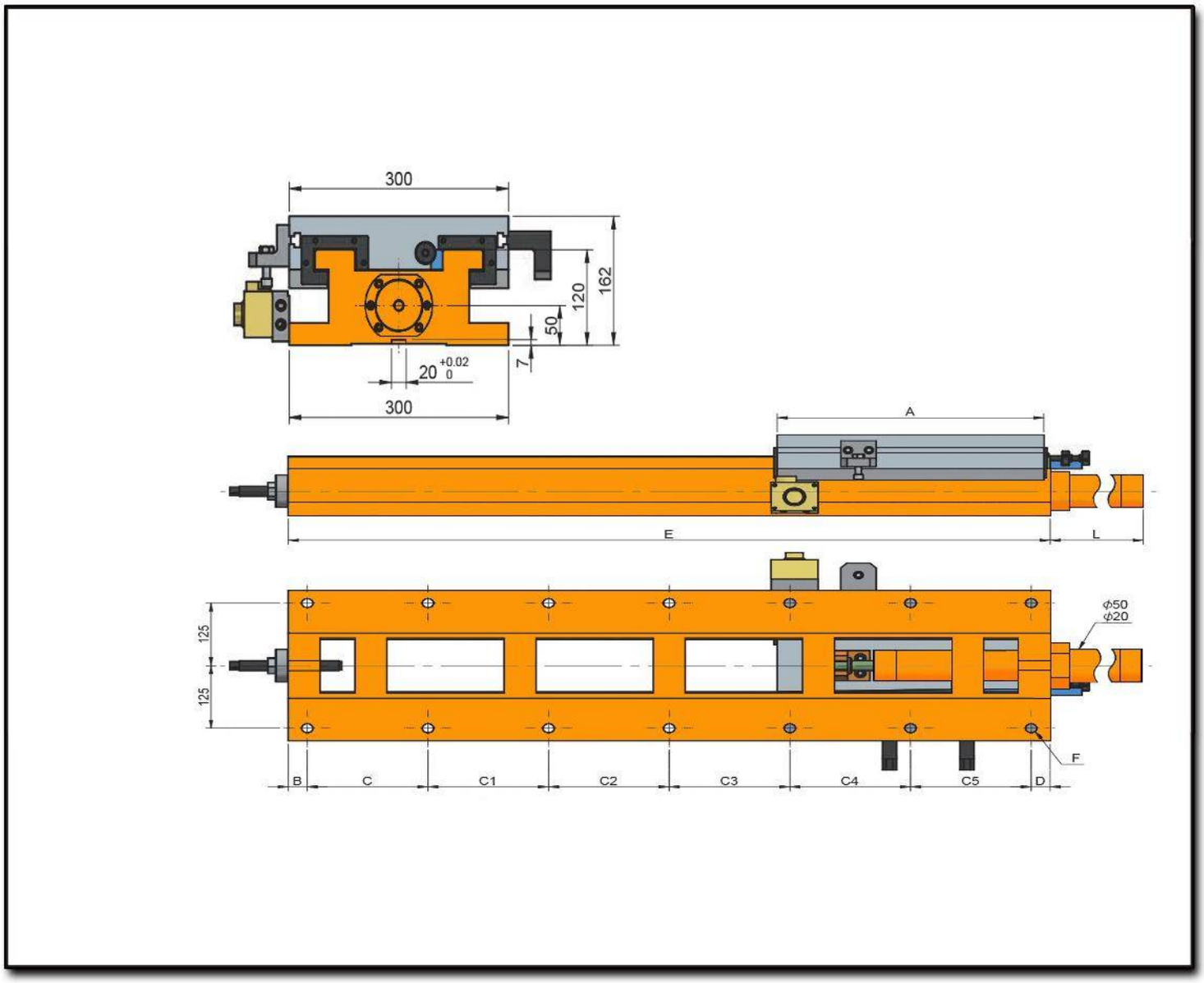
300
162
120
50
7
20 +0.02 0
300
A
E
L
125
125
ϕ50
ϕ20
F
B
C
C1
C2
C3
C4
C5
D

HS360-360/560

Hydraulic Slide

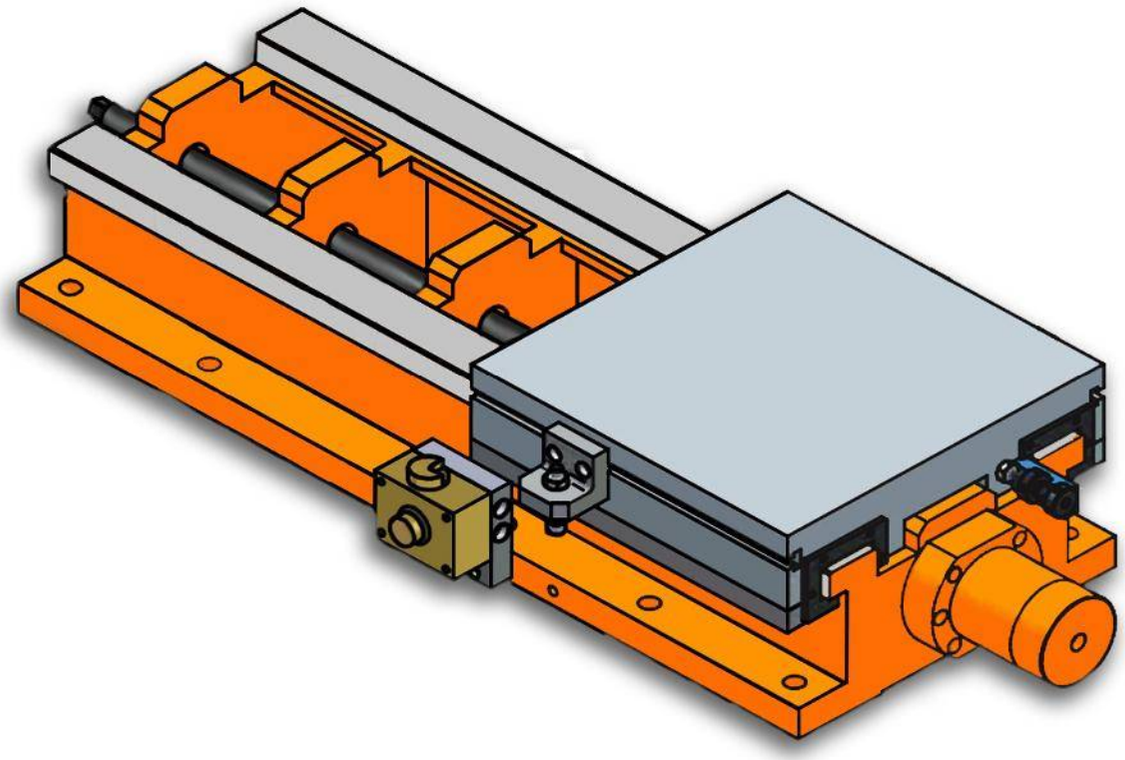

Characteristics & Dimensions

MODEL	HS360-360/560
Profile Width	*360.00*
A	*360.00*
B	*35.00*
C	*165.00*
C1	*165.00*
C2	*165.00*
C3	*-*
C4	*-*
C5	*-*
D	*30.00*
E ***(Profile Length)***	*560.00*
F ***(Lead Screw Pace)***	*8 - Ø18*
L ***(Piston Length)***	*138.00*
Maximum Stroke	*180.00*
Device Total Weight ***(kg)***	*167.00*

***** All dimensions are given in millimeters.*

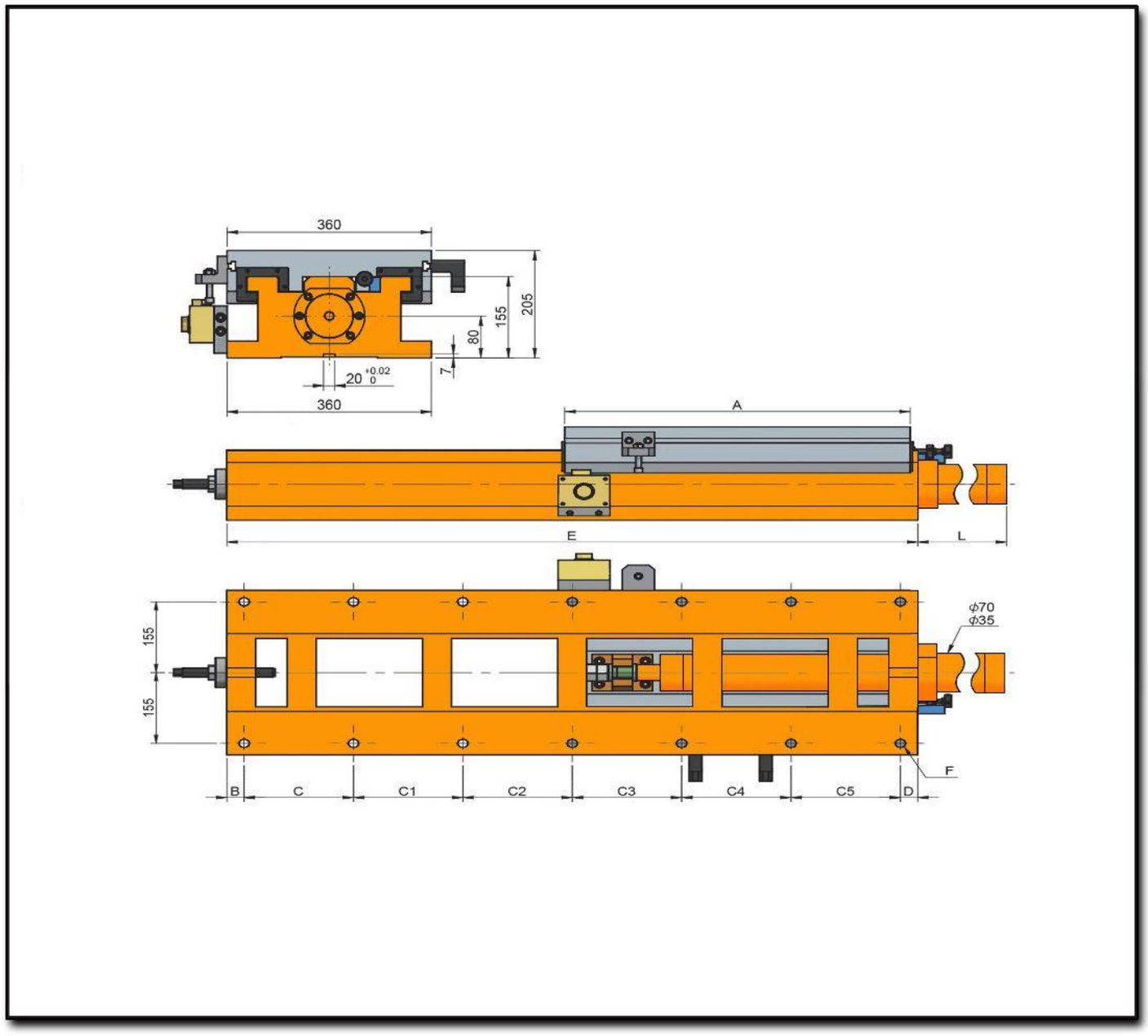
360
205
155
80
7
20 +0.02 0
360
A
E
L
155
155
ϕ70
ϕ35
F
B
C
C1
C2
C3
C4
C5
D

HS360-420/560

Hydraulic Slide

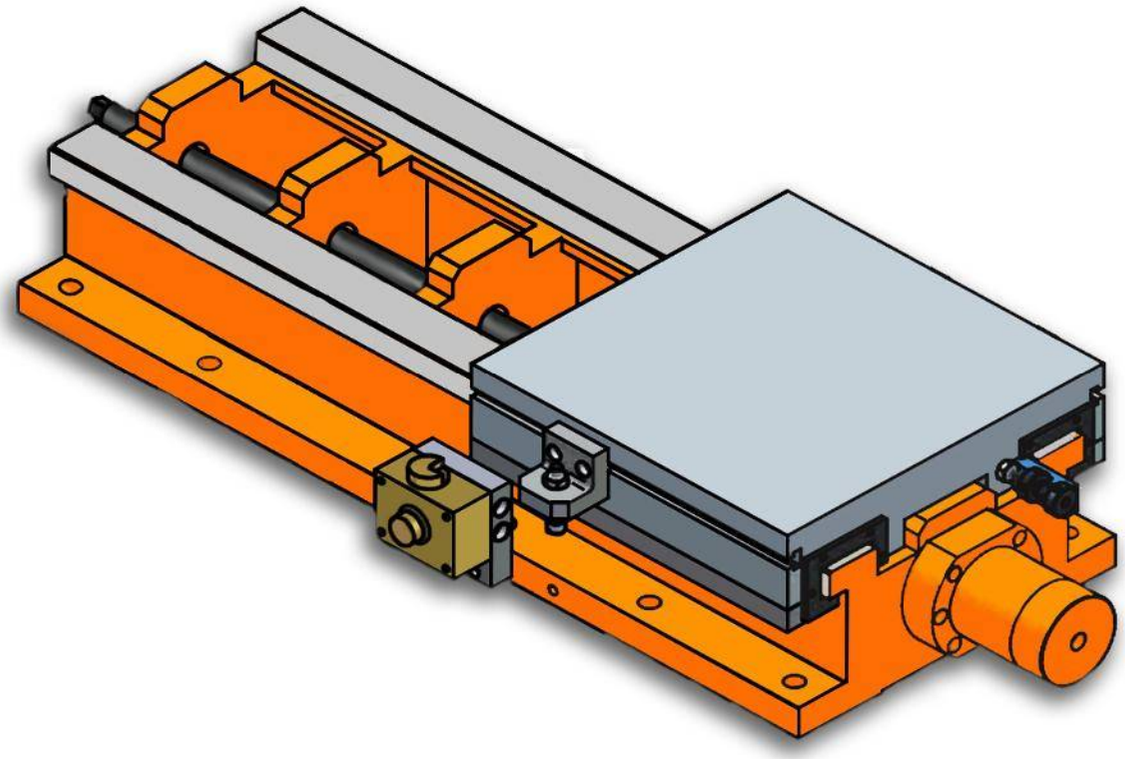

Characteristics & Dimensions

MODEL	HS360-420/560
Profile Width	*360.00*
A	*420.00*
B	*35.00*
C	*165.00*
C1	*165.00*
C2	*165.00*
C3	*-*
C4	*-*
C5	*-*
D	*30.00*
E ***(Profile Length)***	*560.00*
F ***(Lead Screw Pace)***	*8 - Ø18*
L ***(Piston Length)***	*75.00*
Maximum Stroke	*120.00*
Device Total Weight ***(kg)***	*171.00*

***** All dimensions are given in millimeters.*

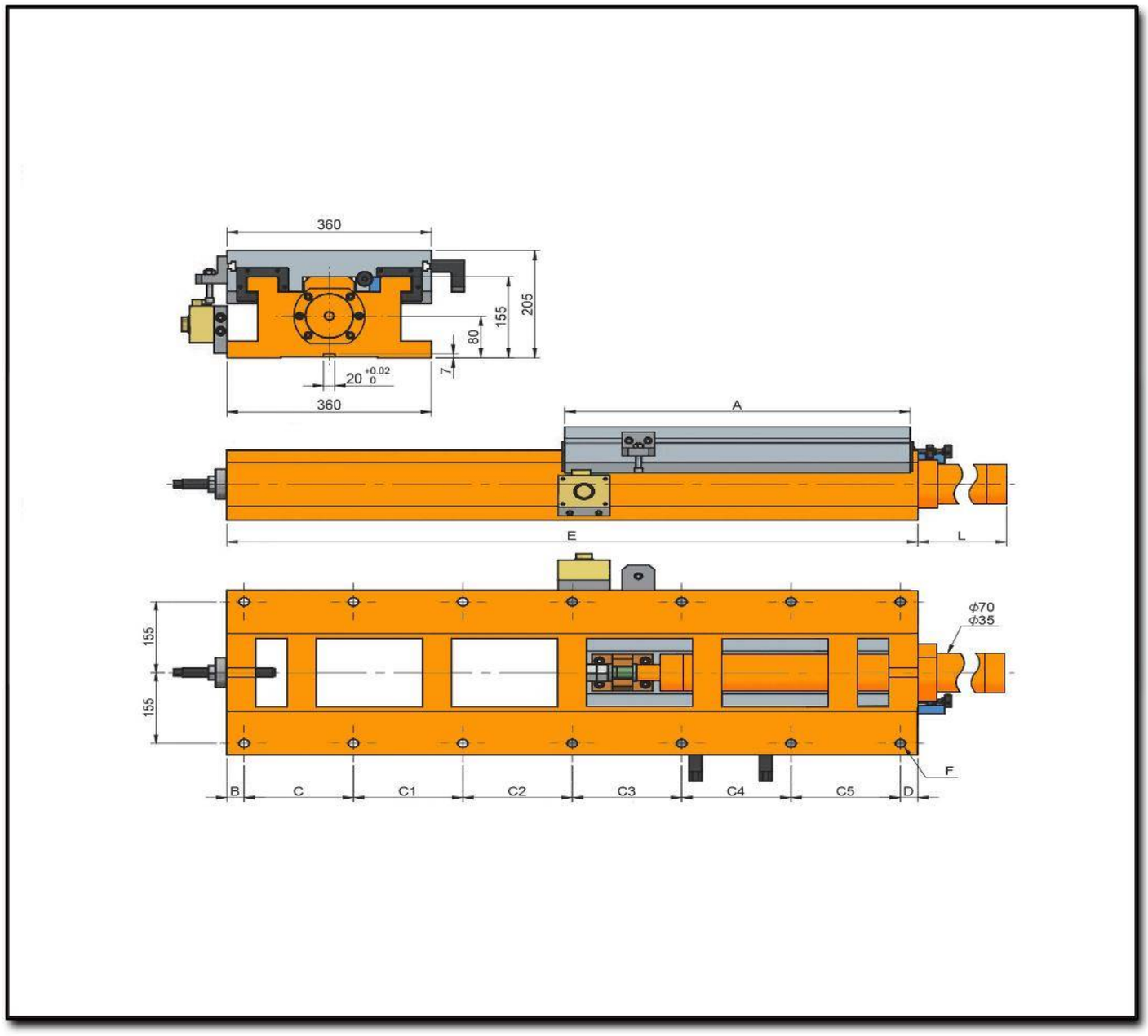
360
205
155
80
7
20 +0.02 0
360
A
E
L
155
155
ϕ70
ϕ35
F
B
C
C1
C2
C3
C4
C5
D

HS360-420/670

Hydraulic Slide

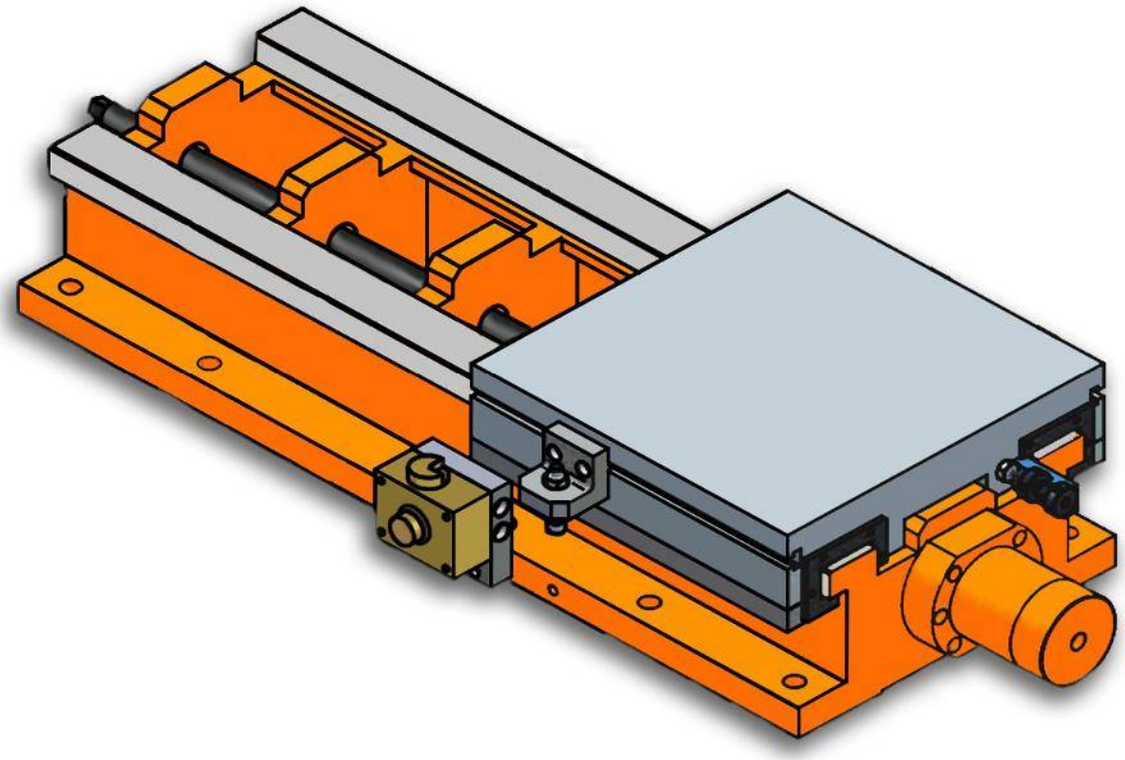

Characteristics & Dimensions

MODEL	HS360-420/670
Profile Width	*360.00*
A	*420.00*
B	*35.00*
C	*140.00*
C1	*140.00*
C2	*140.00*
C3	*180.00*
C4	*-*
C5	*-*
D	*35.00*
E ***(Profile Length)***	*670.00*
F ***(Lead Screw Pace)***	*10 - Ø18*
L ***(Piston Length)***	*128.00*
Maximum Stroke	*230.00*
Device Total Weight ***(kg)***	*192.00*

***** All dimensions are given in millimeters.*

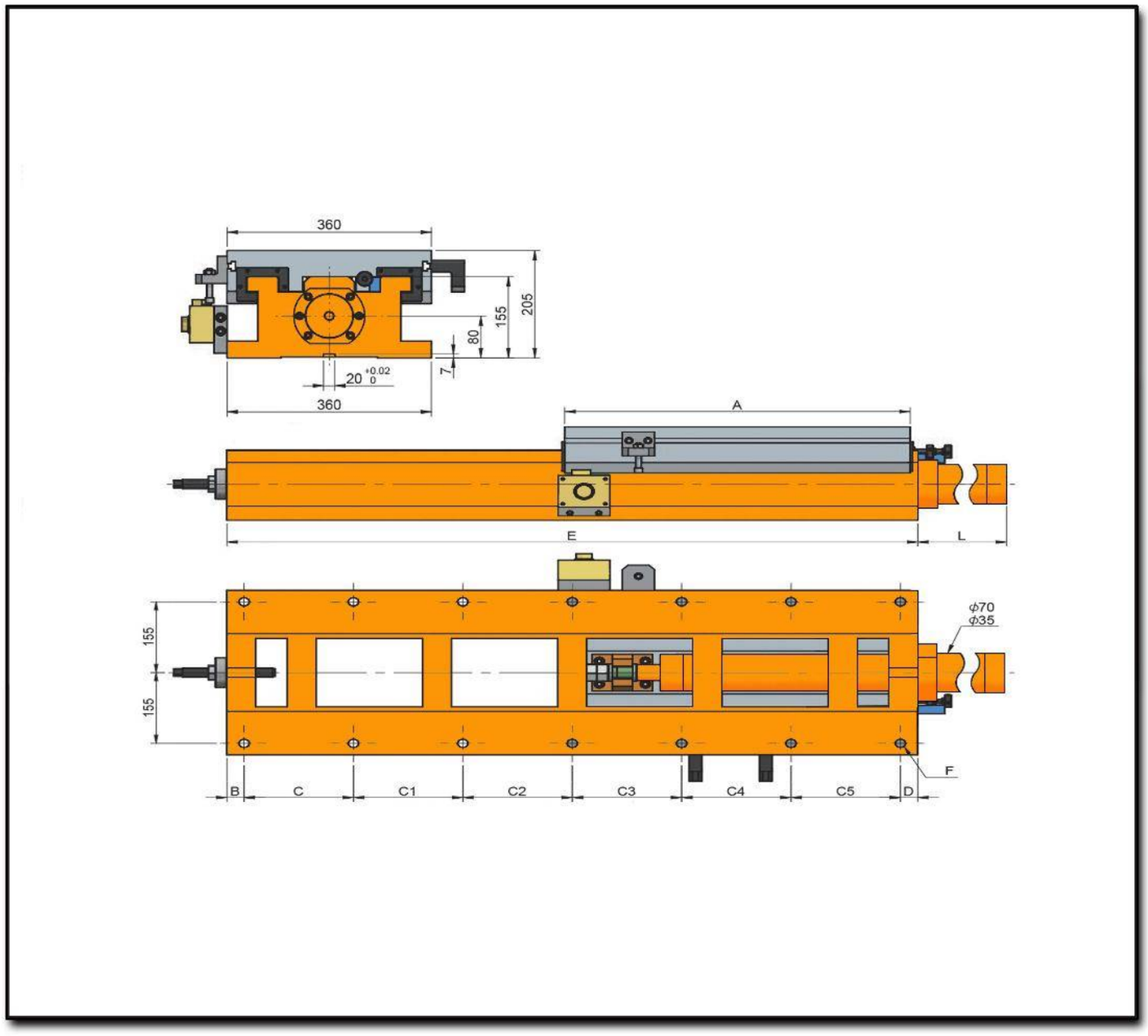
360
205
155
80
7
20 +0.02 0
360
A
E
L
155
155
ϕ70
ϕ35
F
B
C
C1
C2
C3
C4
C5
D

HS360-420/800

Hydraulic Slide

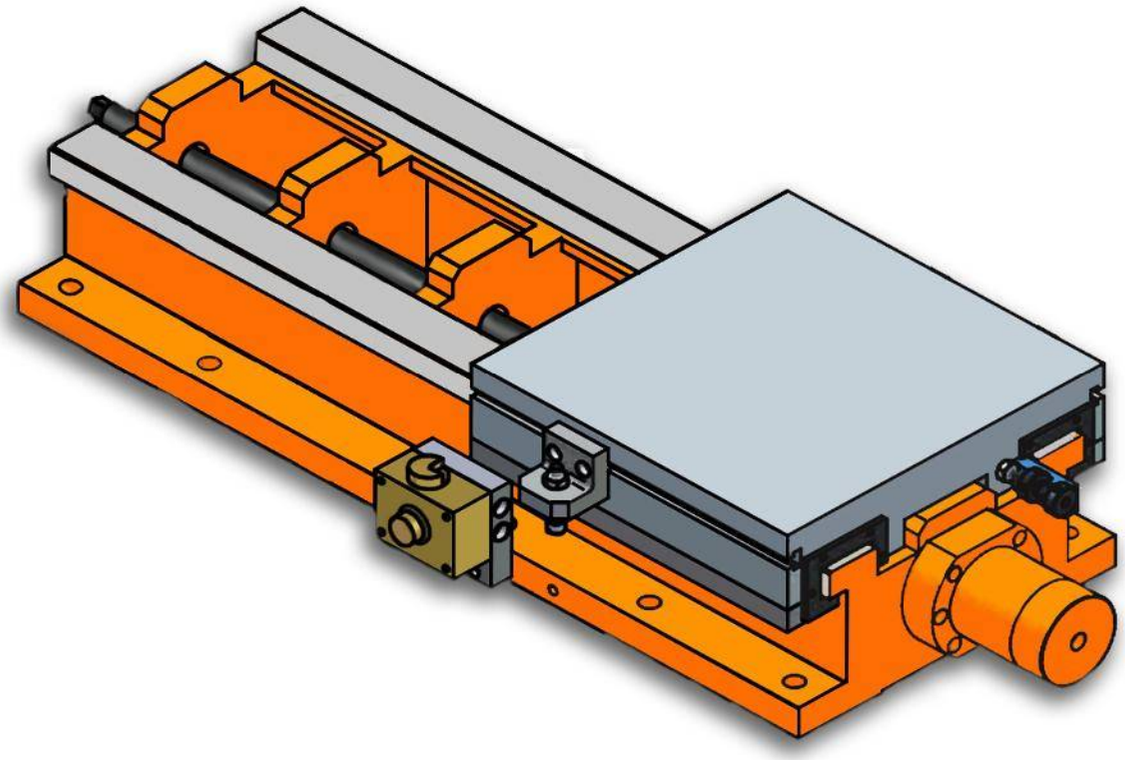

Characteristics & Dimensions

MODEL	HS360-420/800
Profile Width	*360.00*
A	*420.00*
B	*35.00*
C	*140.00*
C1	*140.00*
C2	*140.00*
C3	*140.00*
C4	*170.00*
C5	*-*
D	*35.00*
E ***(Profile Length)***	*800.00*
F ***(Lead Screw Pace)***	*12 - Ø18*
L ***(Piston Length)***	*258.00*
Maximum Stroke	*360.00*
Device Total Weight ***(kg)***	*207.00*

***** All dimensions are given in millimeters.*

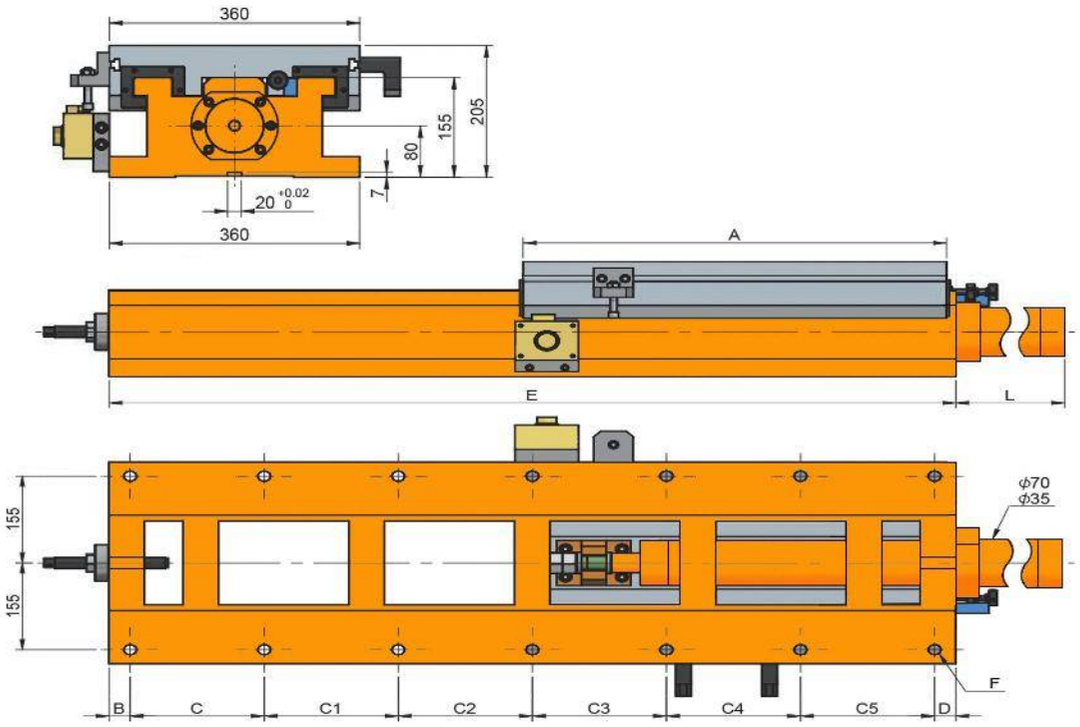
360
205
155
80
7
20 +0.02 0
360
A
E
L
155
155
ϕ70
ϕ35
F
B
C
C1
C2
C3
C4
C5
D

HS360-520/800

Hydraulic Slide

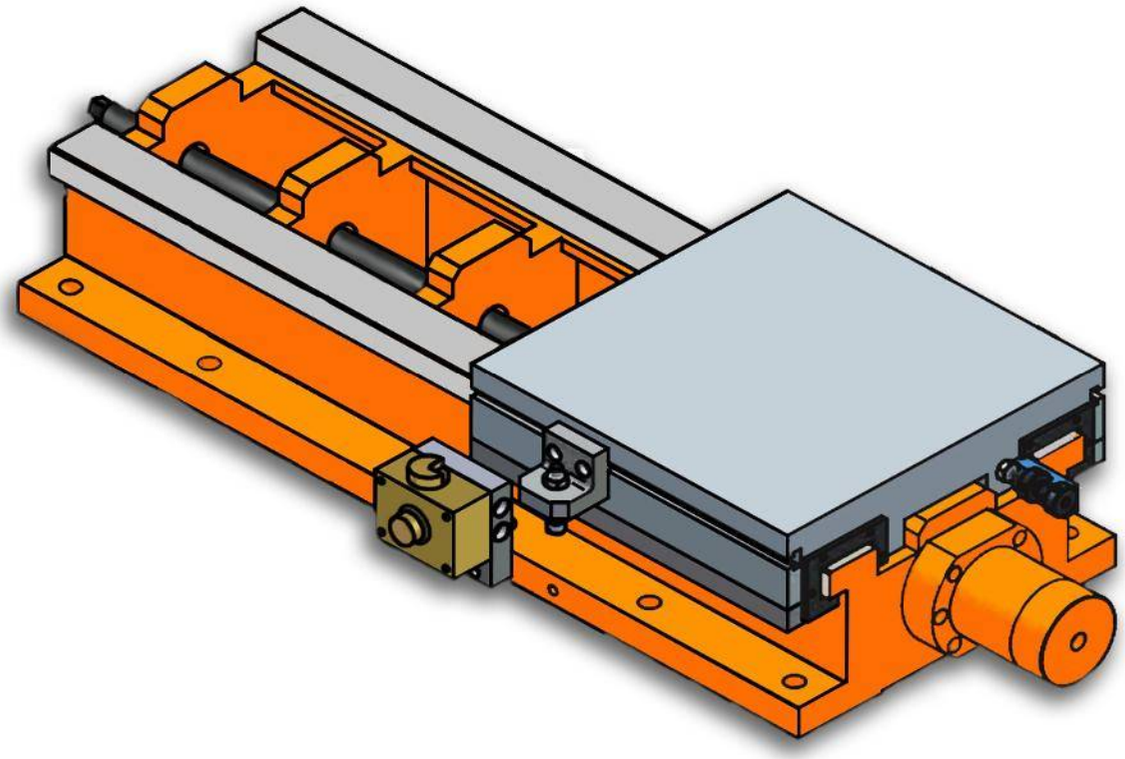

Characteristics & Dimensions

MODEL	HS360-520/800
Profile Width	*360.00*
A	*520.00*
B	*35.00*
C	*140.00*
C1	*140.00*
C2	*140.00*
C3	*140.00*
C4	*170.00*
C5	*-*
D	*35.00*
E ***(Profile Length)***	*800.00*
F ***(Lead Screw Pace)***	*12 - Ø18*
L ***(Piston Length)***	*75.00*
Maximum Stroke	*260.00*
Device Total Weight ***(kg)***	*212.00*

***** All dimensions are given in millimeters.*

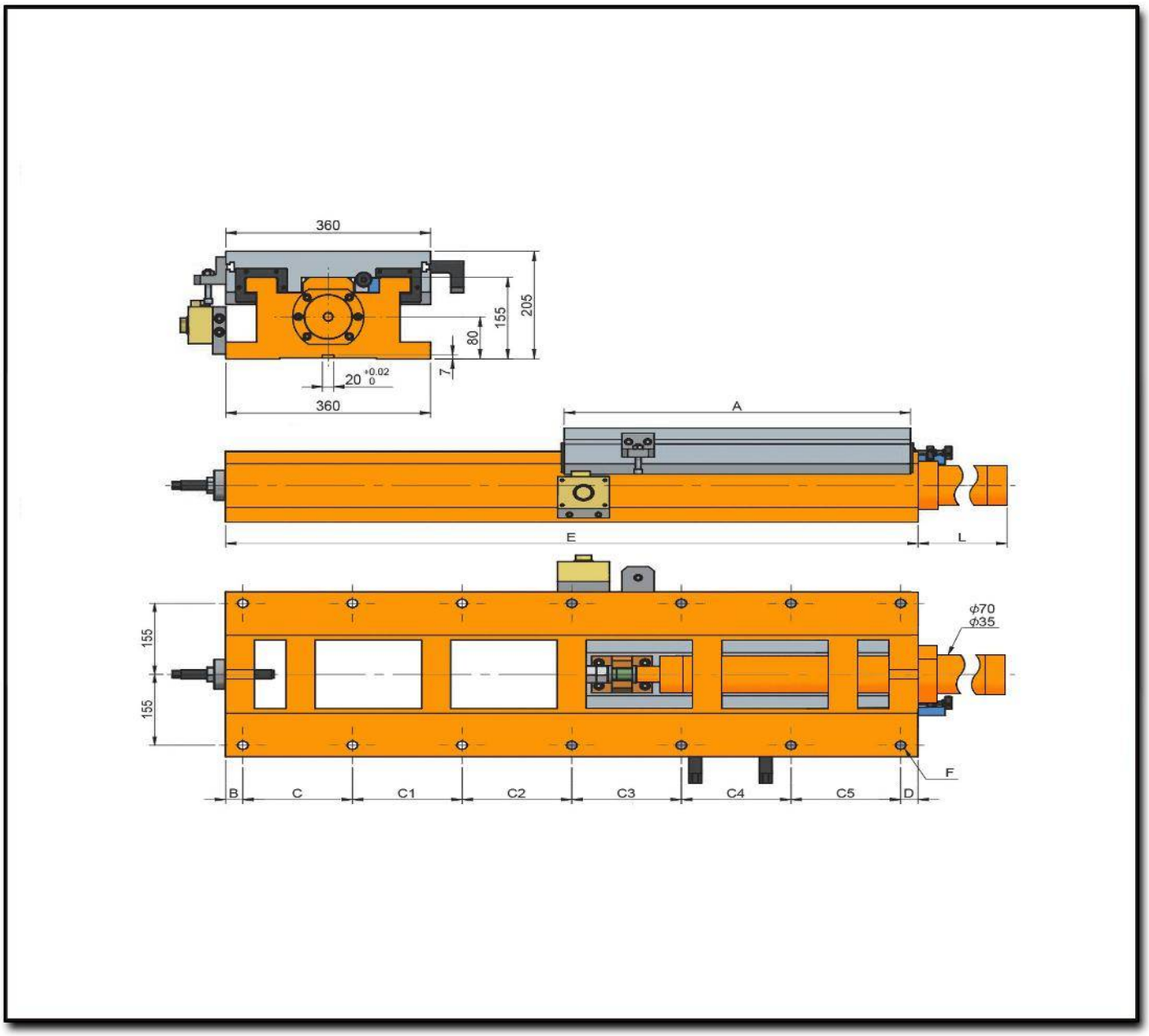
360
205
155
80
7
20 +0.02 0
360
A
E
L
155
155
ϕ70
ϕ35
F
B
C
C1
C2
C3
C4
C5
D

HS360-520/940

Hydraulic Slide

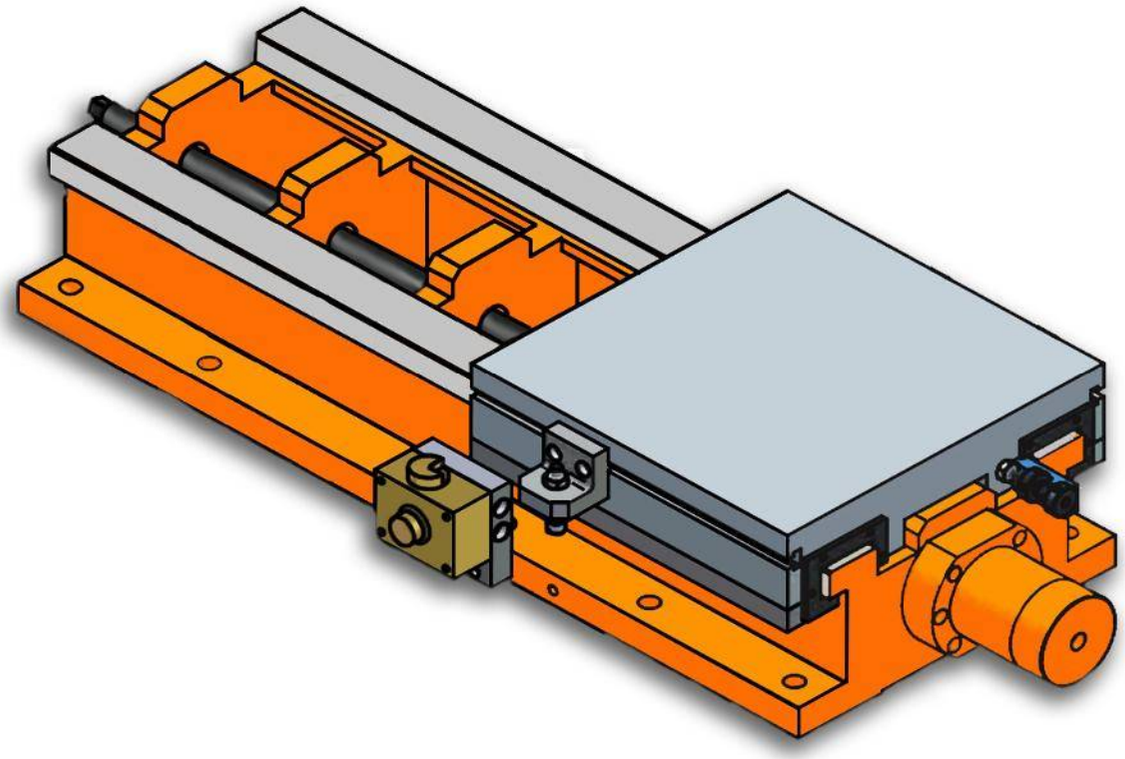

Characteristics & Dimensions

MODEL	HS360-520/940
Profile Width	*360.00*
A	*520.00*
B	*35.00*
C	*175.00*
C1	*175.00*
C2	*175.00*
C3	*175.00*
C4	*175.00*
C5	*-*
D	*30.00*
E ***(Profile Length)***	*940.00*
F ***(Lead Screw Pace)***	*12 - Ø18*
L ***(Piston Length)***	*198.00*
Maximum Stroke	*400.00*
Device Total Weight ***(kg)***	*227.00*

***** All dimensions are given in millimeters.*

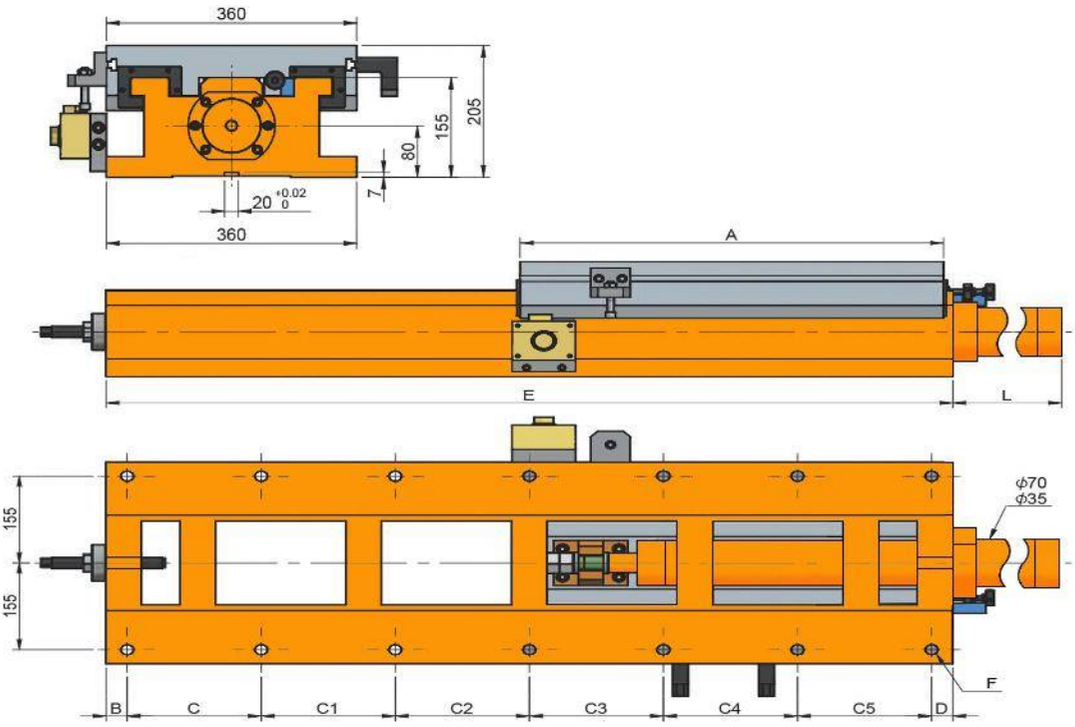
360
205
155
80
7
20 +0.02 0
360
A
E
L
155
155
ϕ70
ϕ35
F
B
C
C1
C2
C3
C4
C5
D

HS360-600/1200

Hydraulic Slide

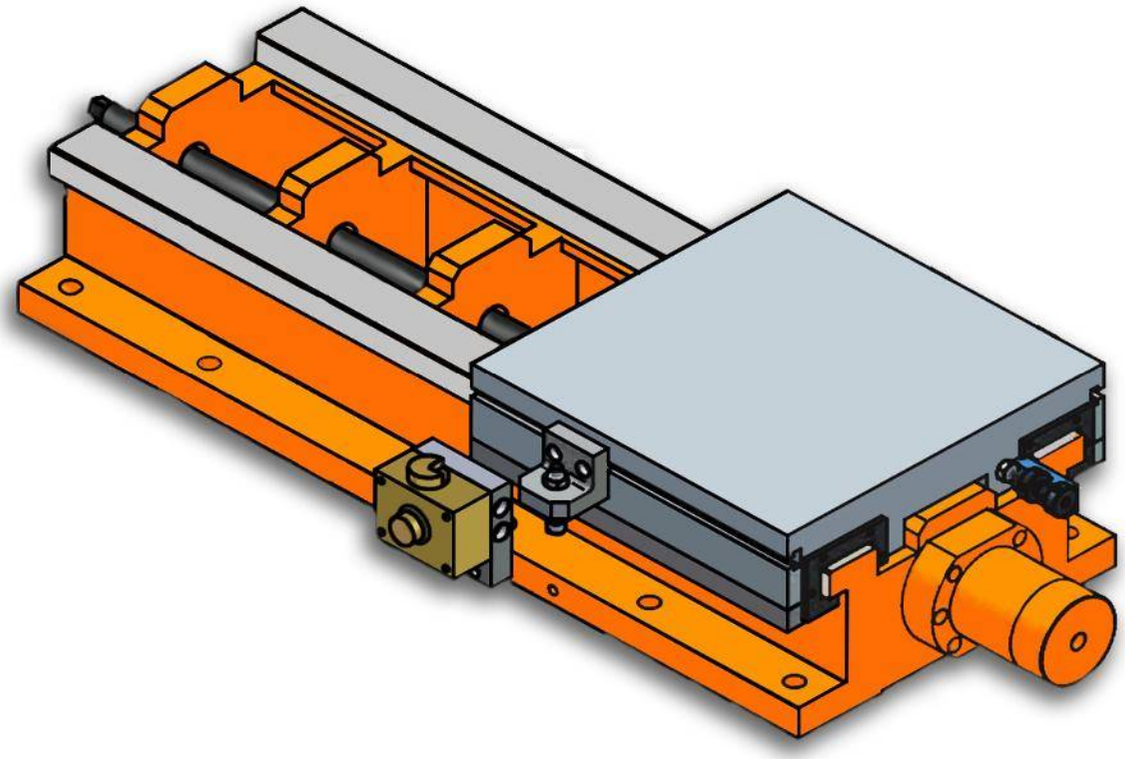

Characteristics & Dimensions

MODEL	HS360-600/1200
Profile Width	*360.00*
A	*600.00*
B	*30.00*
C	*190.00*
C1	*190.00*
C2	*190.00*
C3	*190.00*
C4	*190.00*
C5	*190.00*
D	*30.00*
E ***(Profile Length)***	*1200.00*
F ***(Lead Screw Pace)***	*14 - Ø18*
L ***(Piston Length)***	*298.00*
Maximum Stroke	*580.00*
Device Total Weight ***(kg)***	*273.00*

***** All dimensions are given in millimeters.*

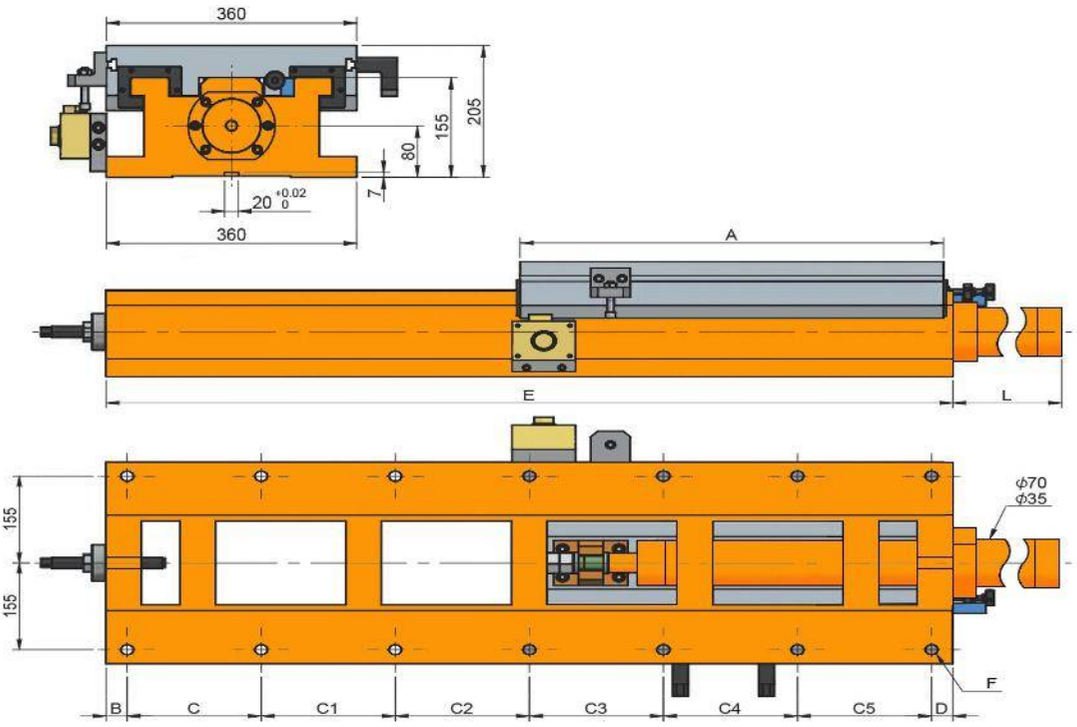
360
205
155
80
7
20 +0.02 0
360
A
E
L
155
155
ϕ70
ϕ35
F
B
C
C1
C2
C3
C4
C5
D

HS420-420/560

Hydraulic Slide

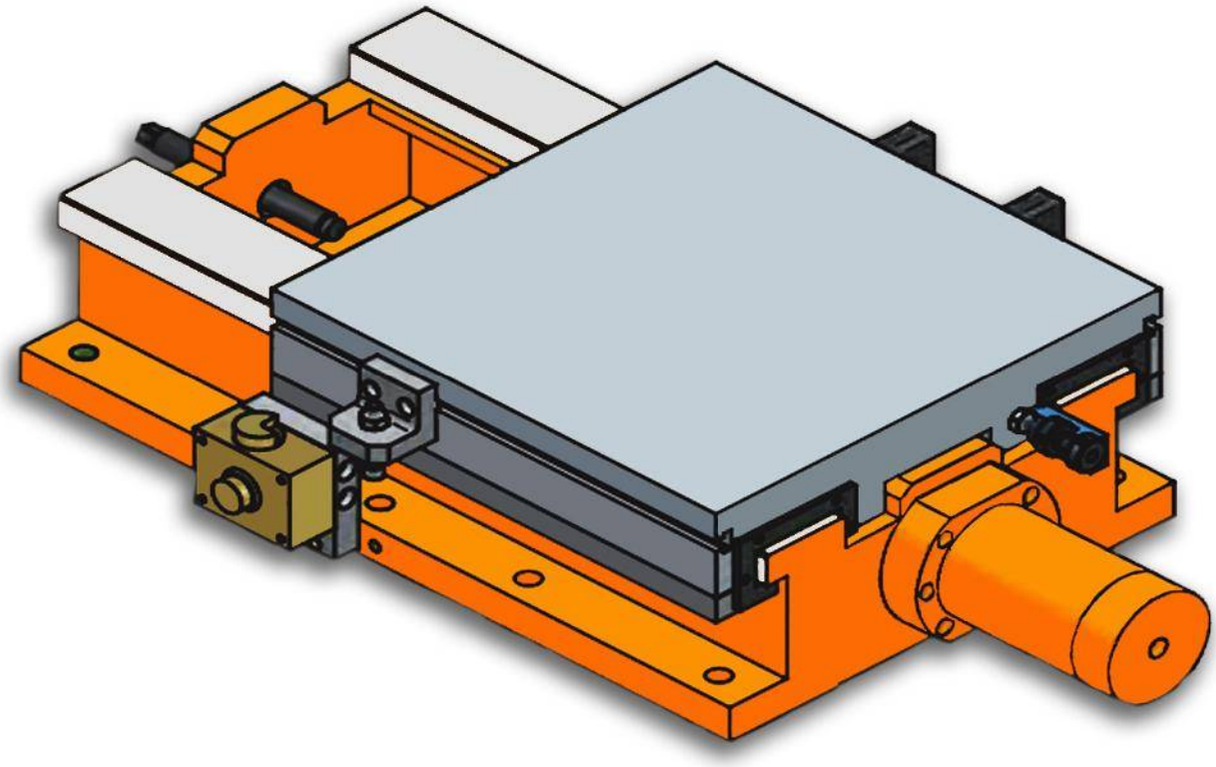

Characteristics & Dimensions

MODEL	HS420-420/560
Profile Width	*420.00*
A	*420.00*
B	*35.00*
C	*165.00*
C1	*165.00*
C2	*165.00*
C3	*-*
C4	*-*
C5	*-*
D	*30.00*
E ***(Profile Length)***	*560.00*
F ***(Lead Screw Pace)***	*8 - Ø18*
L ***(Piston Length)***	*80.00*
Maximum Stroke	*120.00*
Device Total Weight ***(kg)***	*221.00*

***** All dimensions are given in millimeters.*

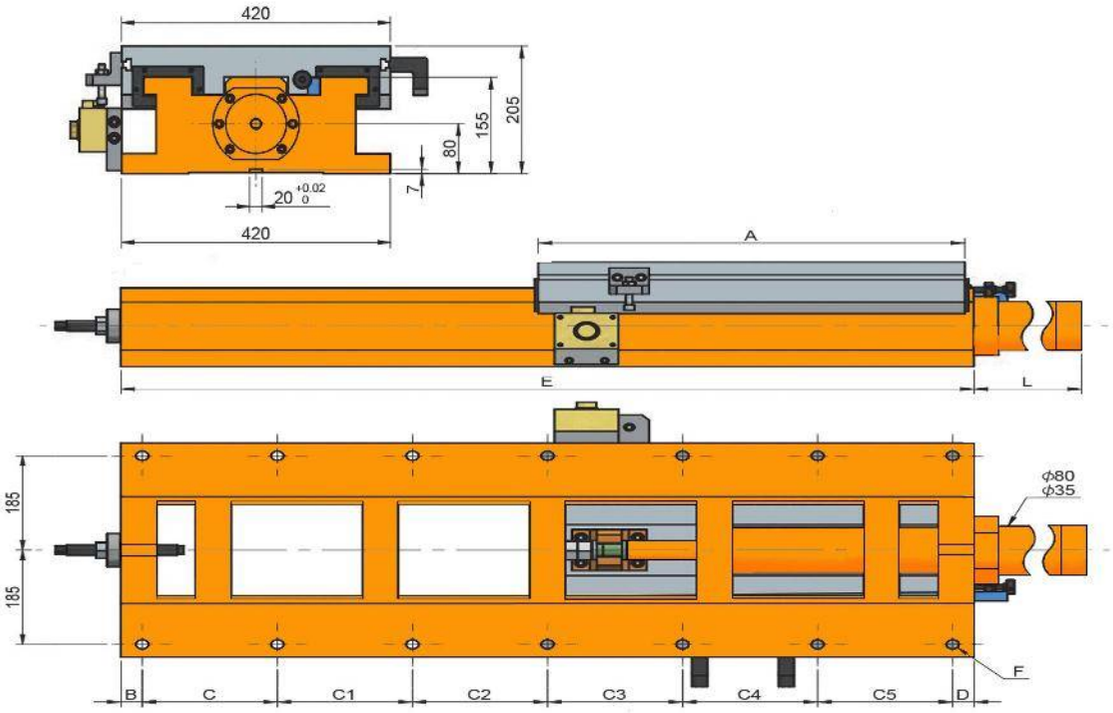
420
205
155
80
7
20 +0.02 0
420
A
E
L
185
185
ϕ80
ϕ35
F
B
C
C1
C2
C3
C4
C5
D

HS420-420/670

Hydraulic Slide

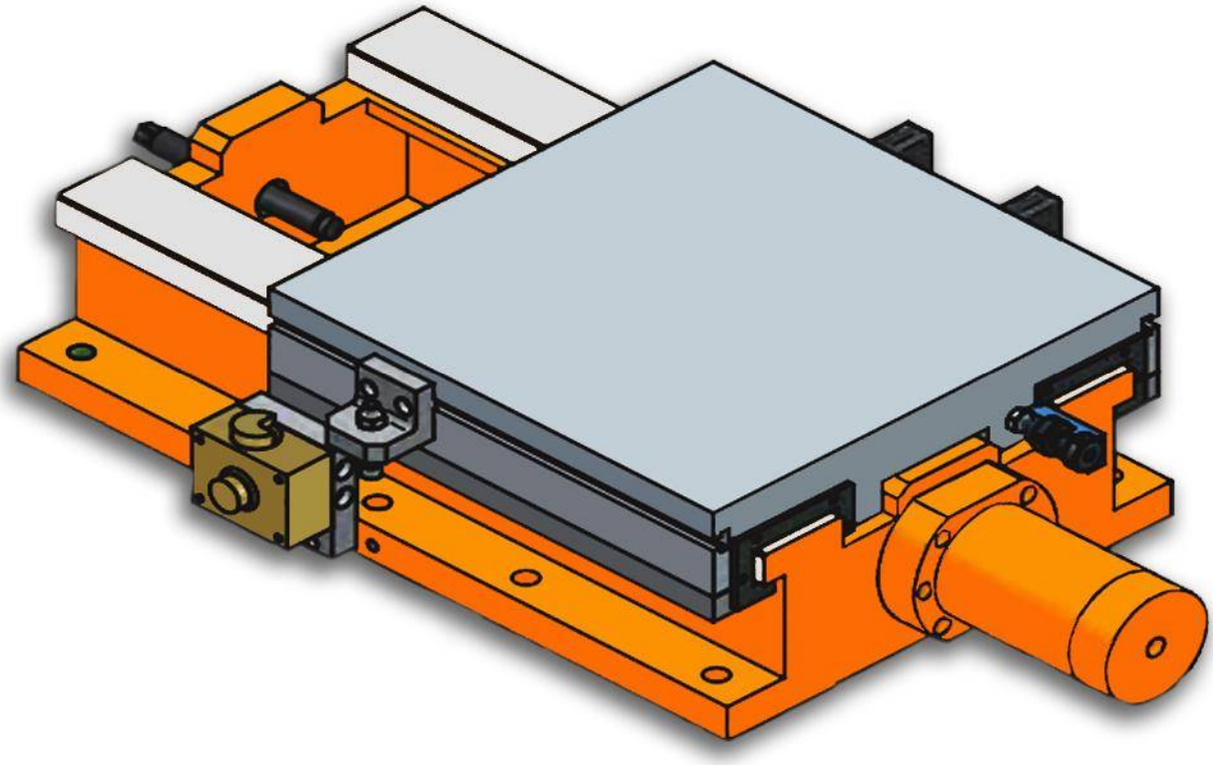

Characteristics & Dimensions

MODEL	HS420-420/670
Profile Width	*420.00*
A	*420.00*
B	*35.00*
C	*140.00*
C1	*140.00*
C2	*140.00*
C3	*180.00*
C4	*-*
C5	*-*
D	*35.00*
E ***(Profile Length)***	*670.00*
F ***(Lead Screw Pace)***	*10 - Ø18*
L ***(Piston Length)***	*195.00*
Maximum Stroke	*230.00*
Device Total Weight ***(kg)***	*230.00*

***** All dimensions are given in millimeters.*

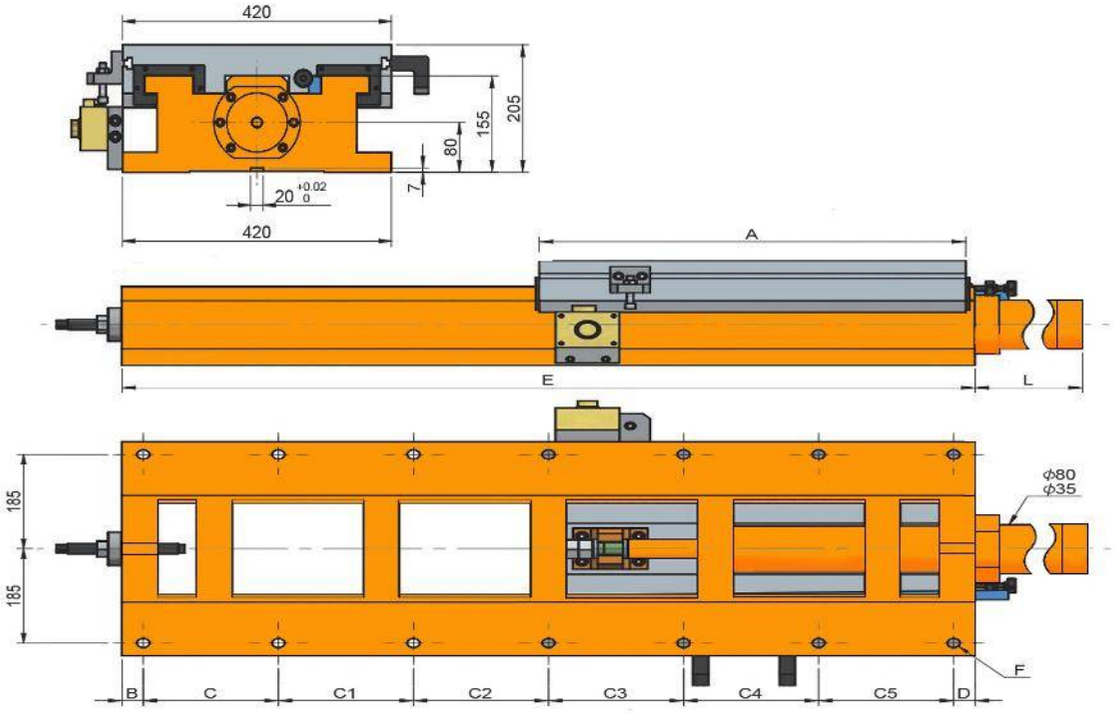
420
205
155
80
7
20 +0.02 0
420
A
E
L
185
185
ϕ80
ϕ35
F
B
C
C1
C2
C3
C4
C5
D

HS420-520/940

Hydraulic Slide

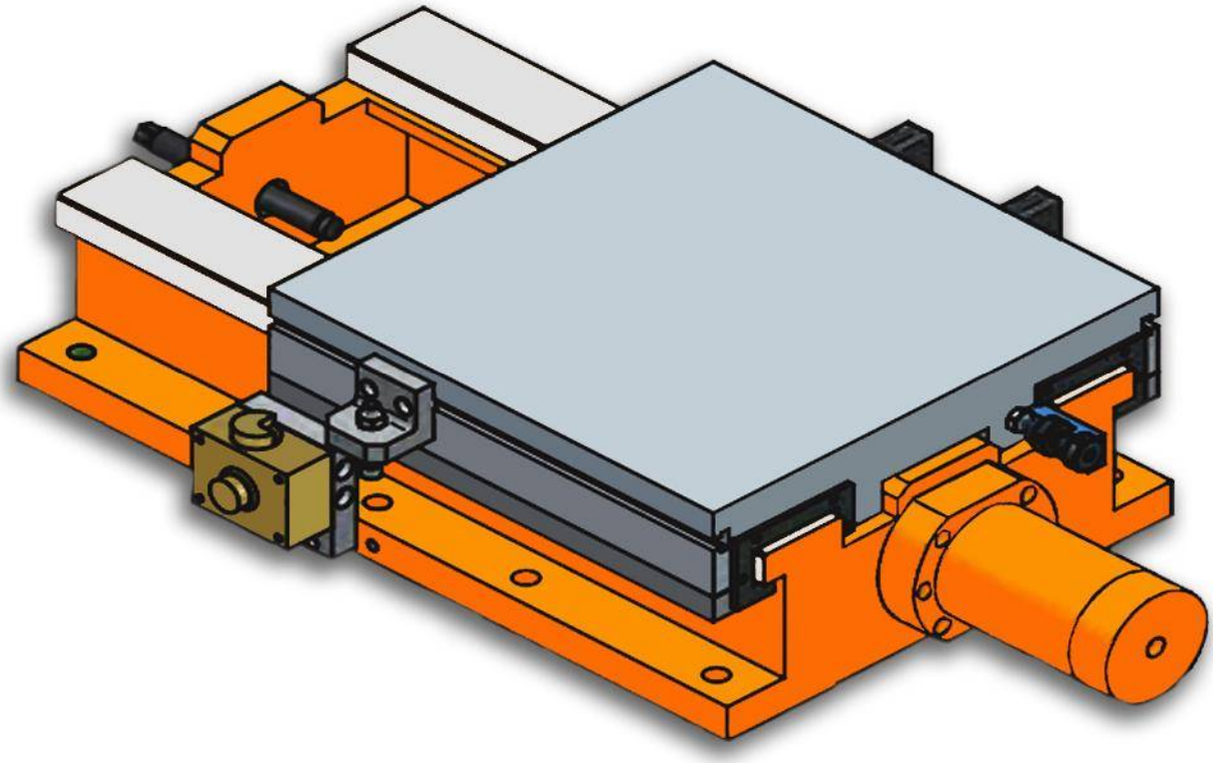

Characteristics & Dimensions

MODEL	HS420-520/940
Profile Width	*420.00*
A	*520.00*
B	*35.00*
C	*175.00*
C1	*175.00*
C2	*175.00*
C3	*175.00*
C4	*175.00*
C5	*-*
D	*30.00*
E ***(Profile Length)***	*940.00*
F ***(Lead Screw Pace)***	*12 - Ø18*
L ***(Piston Length)***	*265.00*
Maximum Stroke	*400.00*
Device Total Weight ***(kg)***	*292.00*

***** All dimensions are given in millimeters.*

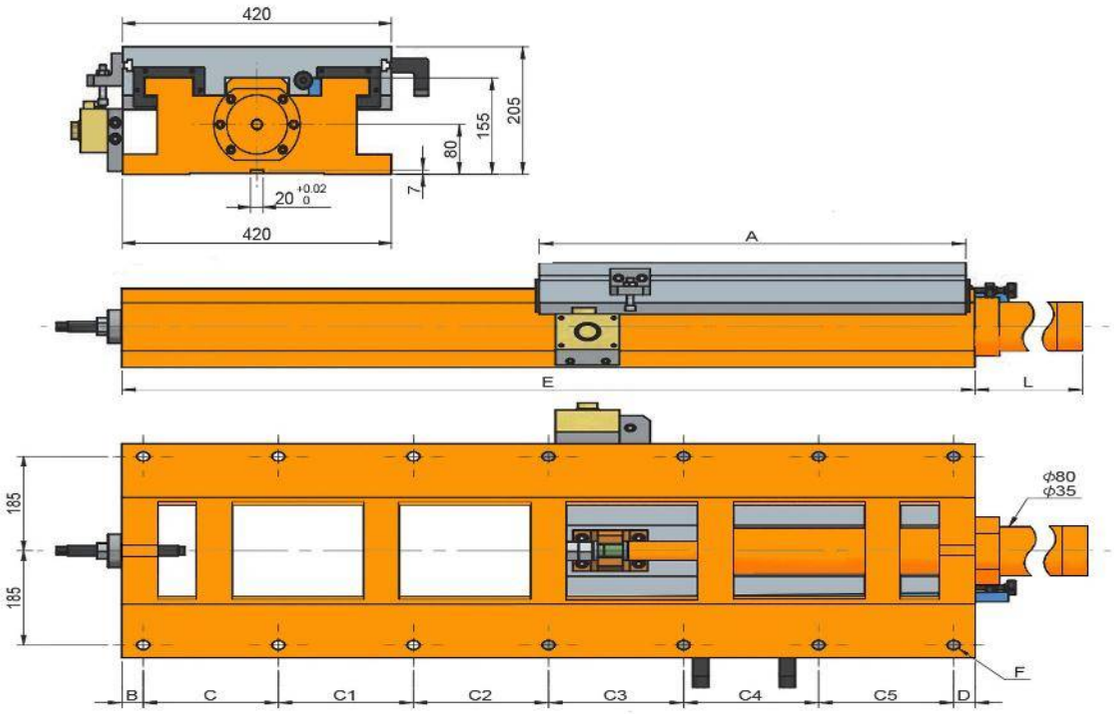
420
205
155
80
7
20 +0.02 0
420
A
E
L
185
185
ϕ80
ϕ35
F
B
C
C1
C2
C3
C4
C5
D

HS420-600/1200

Hydraulic Slide

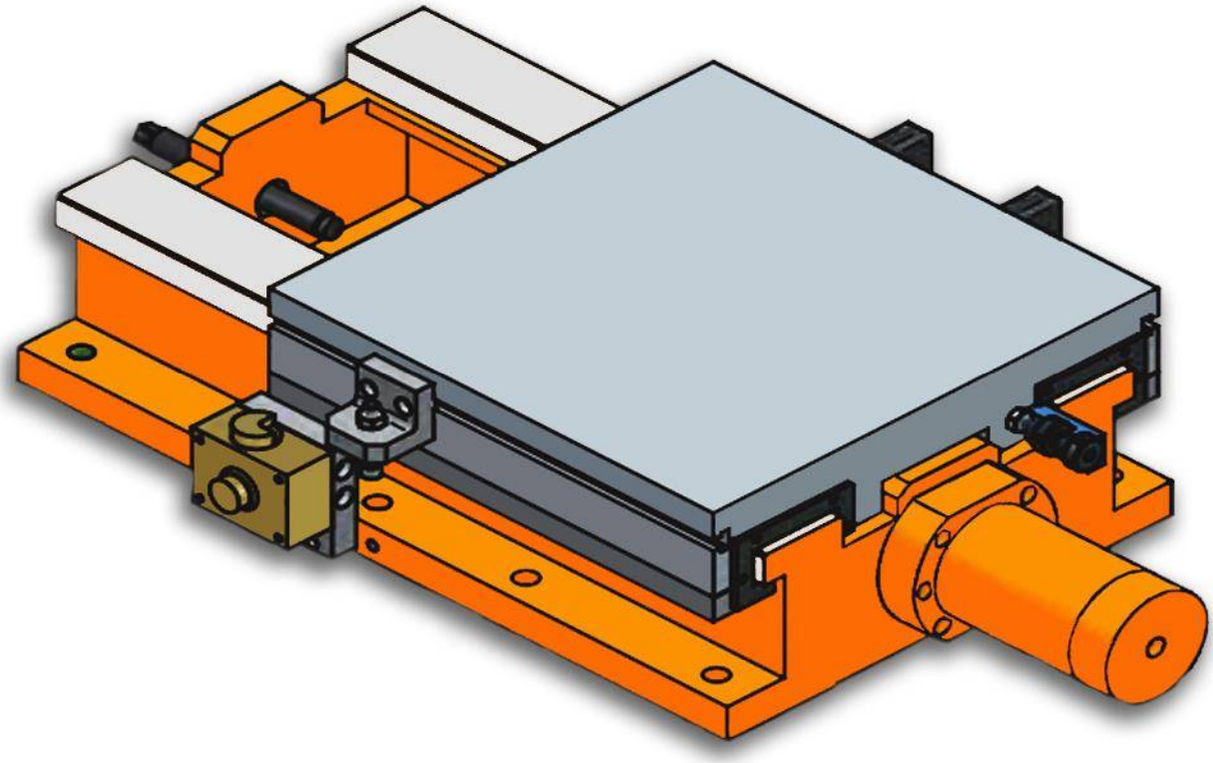

Characteristics & Dimensions

MODEL	HS420-600/1200
Profile Width	*420.00*
A	*600.00*
B	*30.00*
C	*190.00*
C1	*190.00*
C2	*190.00*
C3	*190.00*
C4	*190.00*
C5	*190.00*
D	*30.00*
E ***(Profile Length)***	*1200.00*
F ***(Lead Screw Pace)***	*14 - Ø18*
L ***(Piston Length)***	*365.00*
Maximum Stroke	*580.00*
Device Total Weight ***(kg)***	*323.00*

***** All dimensions are given in millimeters.*

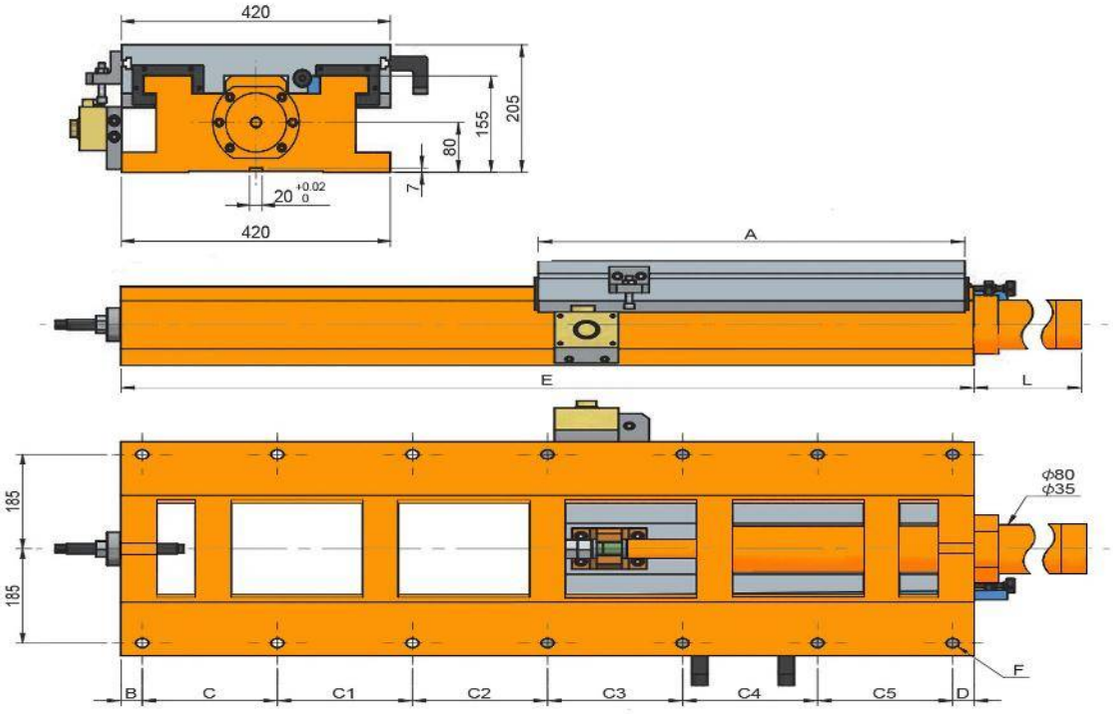
420
205
155
80
7
20 +0.02 0
420
A
E
L
185
185
ϕ80
ϕ35
F
B
C
C1
C2
C3
C4
C5
D

HS500-520/885

Hydraulic Slide

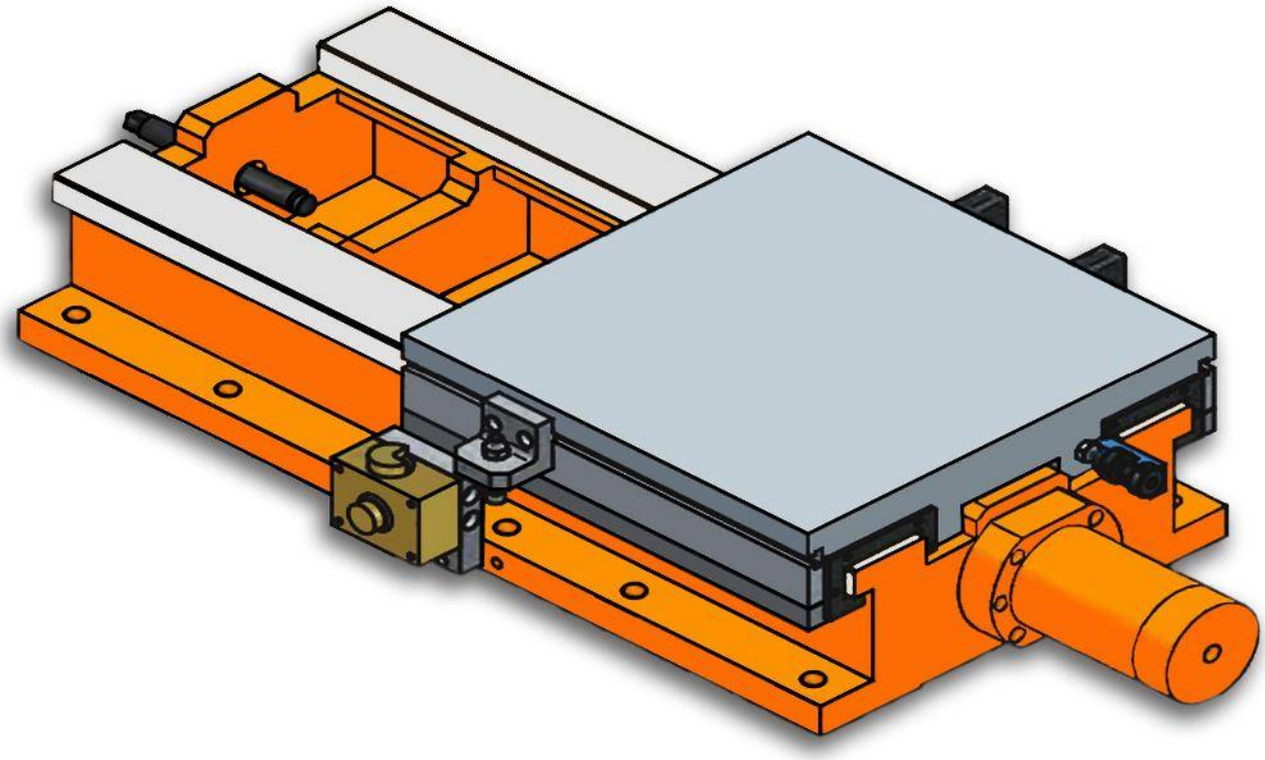

Characteristics & Dimensions

MODEL	HS500-520/885
Profile Width	*500.00*
A	*520.00*
B	*40.00*
C	*220.00*
C1	*220.00*
C2	*220.00*
C3	*145.00*
C4	*-*
C5	*-*
D	*40.00*
E ***(Profile Length)***	*885.00*
F ***(Lead Screw Pace)***	*10 - Ø22*
L ***(Piston Length)***	*194.00*
Maximum Stroke	*345.00*
Device Total Weight ***(kg)***	*422.00*

***** All dimensions are given in millimeters.*

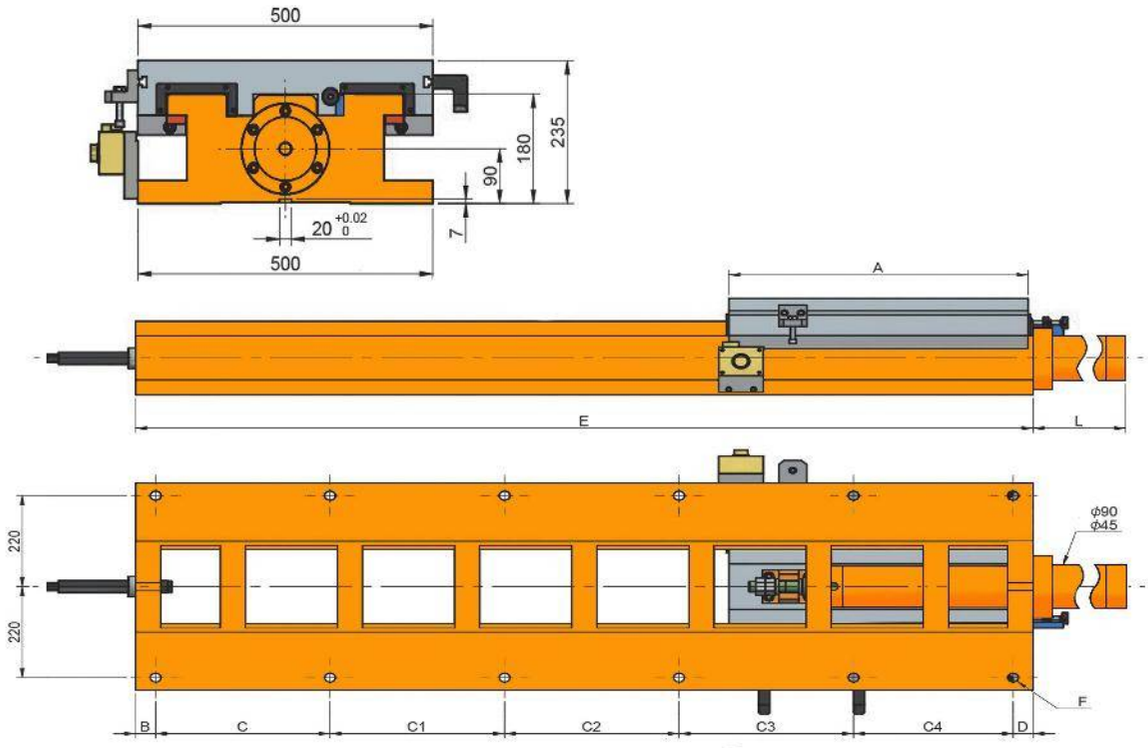
500
235
180
90
7
20 +0.02 0
500
A
E
L
220
220
ϕ90
ϕ45
F
B
C
C1
C2
C3
C4
D

HS500-600/1200

Hydraulic Slide

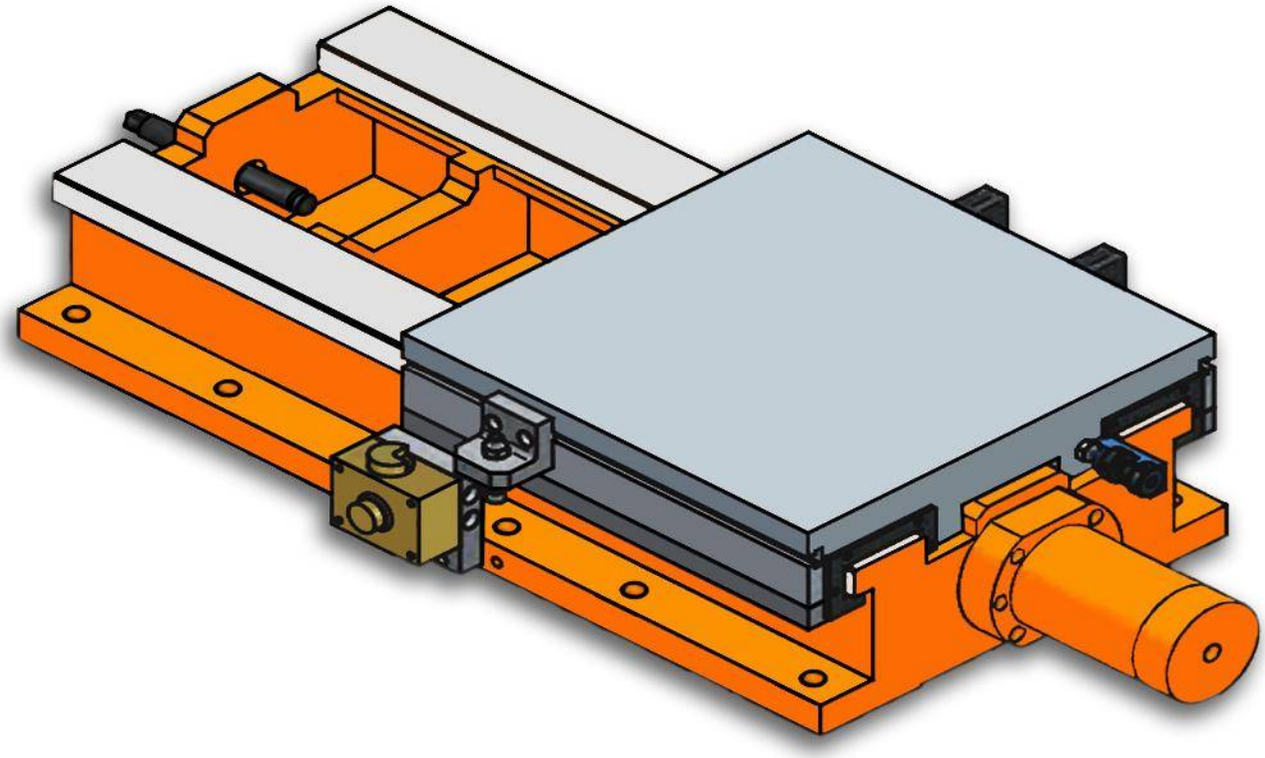

Characteristics & Dimensions

MODEL	HS500-600/1200
Profile Width	*500.00*
A	*600.00*
B	*40.00*
C	*220.00*
C1	*220.00*
C2	*220.00*
C3	*220.00*
C4	*240.00*
C5	*-*
D	*40.00*
E ***(Profile Length)***	*1200.00*
F ***(Lead Screw Pace)***	*12 - Ø22*
L ***(Piston Length)***	*349.00*
Maximum Stroke	*580.00*
Device Total Weight ***(kg)***	*515.00*

***** All dimensions are given in millimeters.*

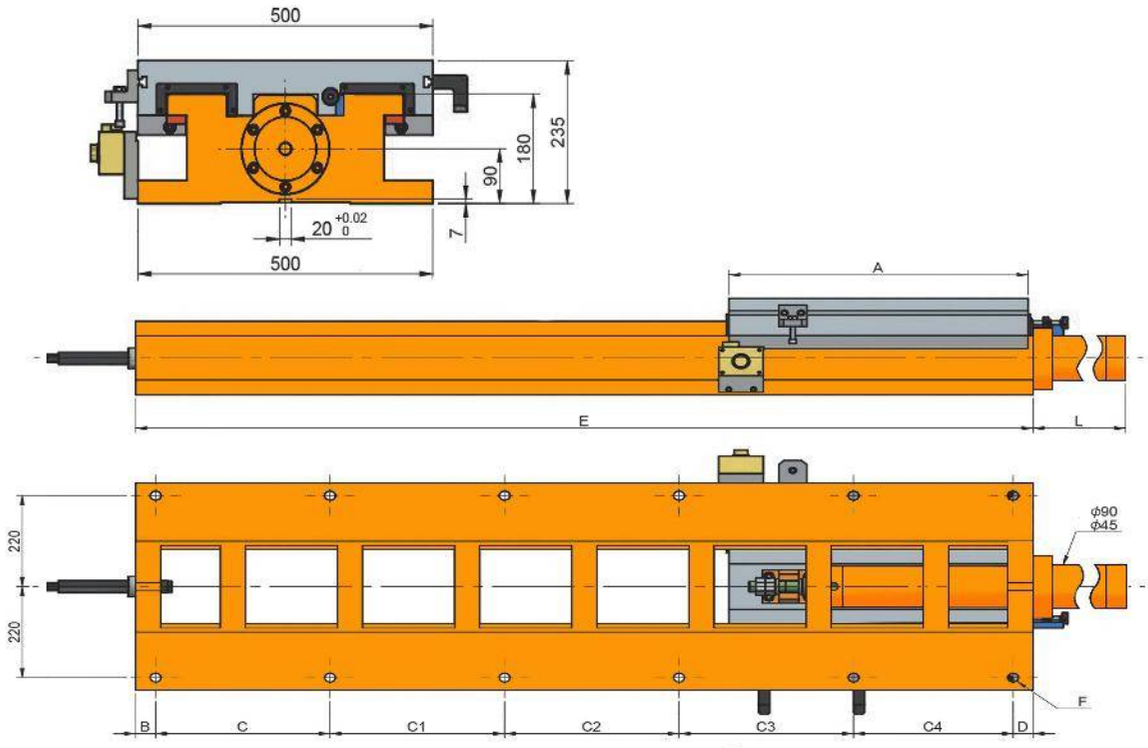
500
235
180
90
7
20 +0.02 0
500
A
E
L
220
220
ϕ90
ϕ45
F
B
C
C1
C2
C3
C4
D

HS500-600/1800

Hydraulic Slide

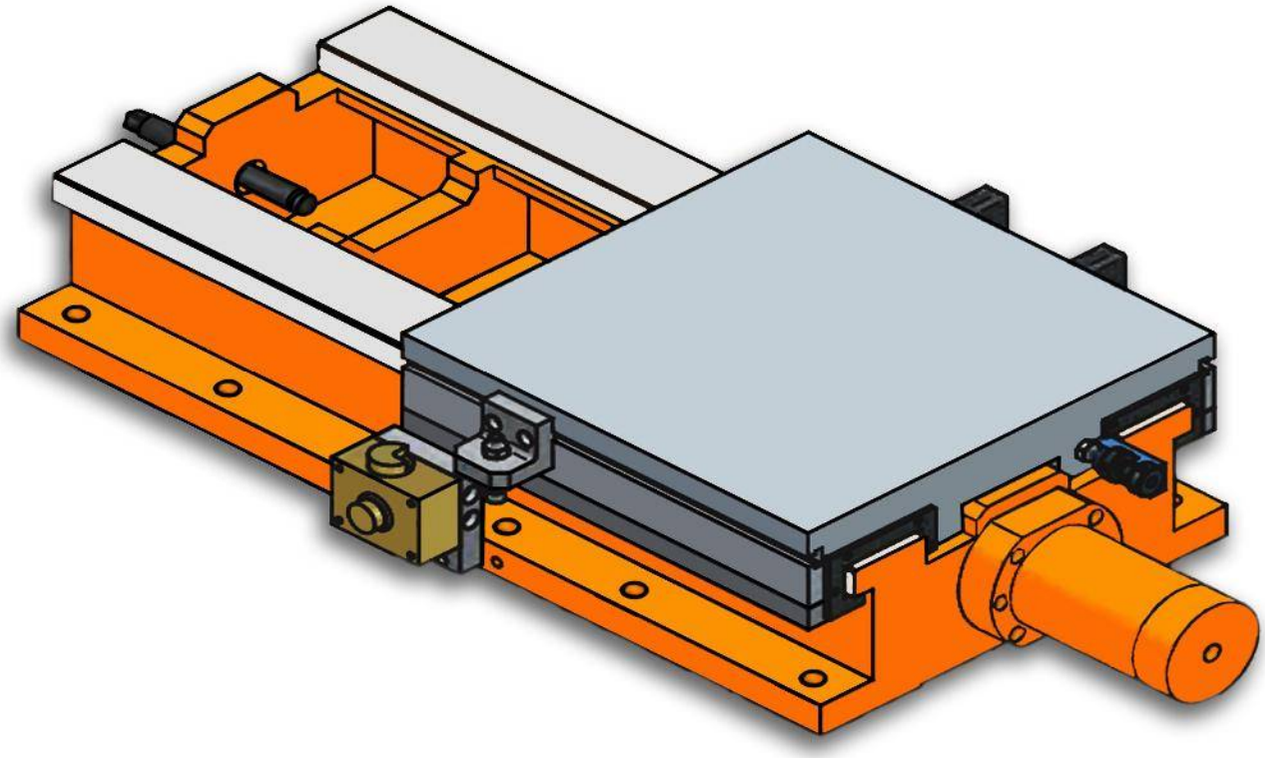

Characteristics & Dimensions

MODEL	HS500-600/1800
Profile Width	*500.00*
A	*600.00*
B	*40.00*
C	*350.00*
C1	*350.00*
C2	*350.00*
C3	*350.00*
C4	*320.00*
C5	*-*
D	*40.00*
E ***(Profile Length)***	*1800.00*
F ***(Lead Screw Pace)***	*12 - Ø22*
L ***(Piston Length)***	*944.00*
Maximum Stroke	*1180.00*
Device Total Weight ***(kg)***	*655.00*

***** All dimensions are given in millimeters.*

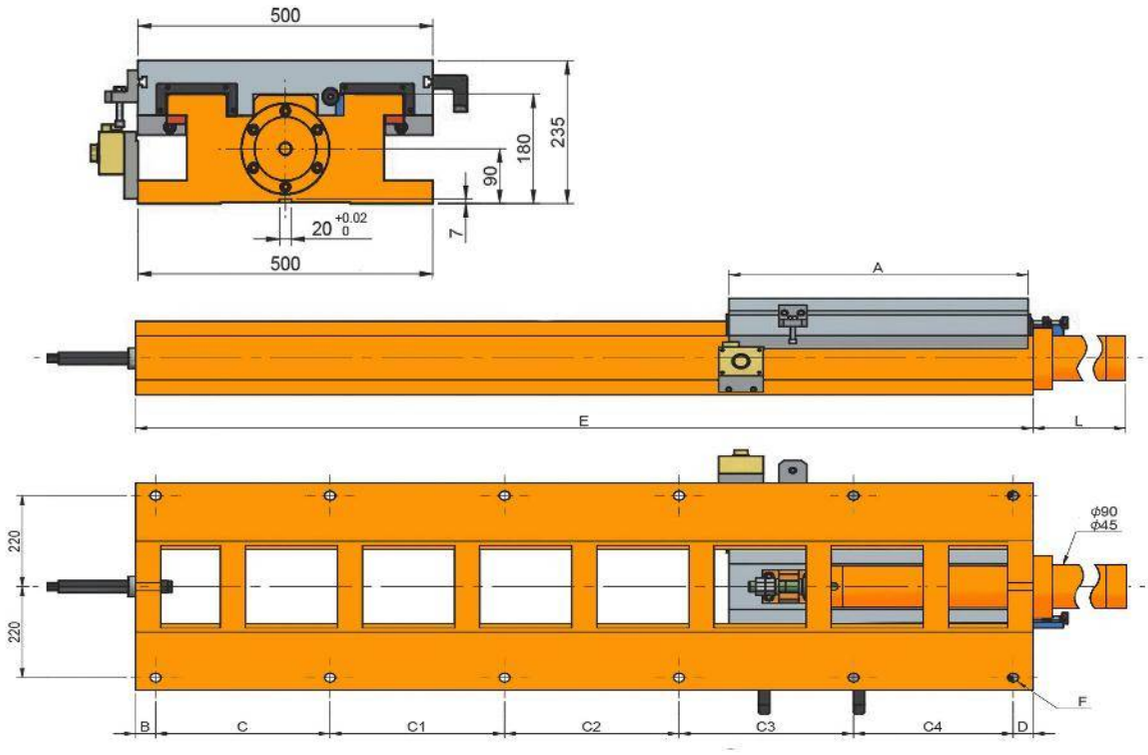
500
235
180
90
7
20 +0.02 0
500
A
E
L
220
220
ϕ90
ϕ45
F
B
C
C1
C2
C3
C4
D

HS600-520/885

Hydraulic Slide

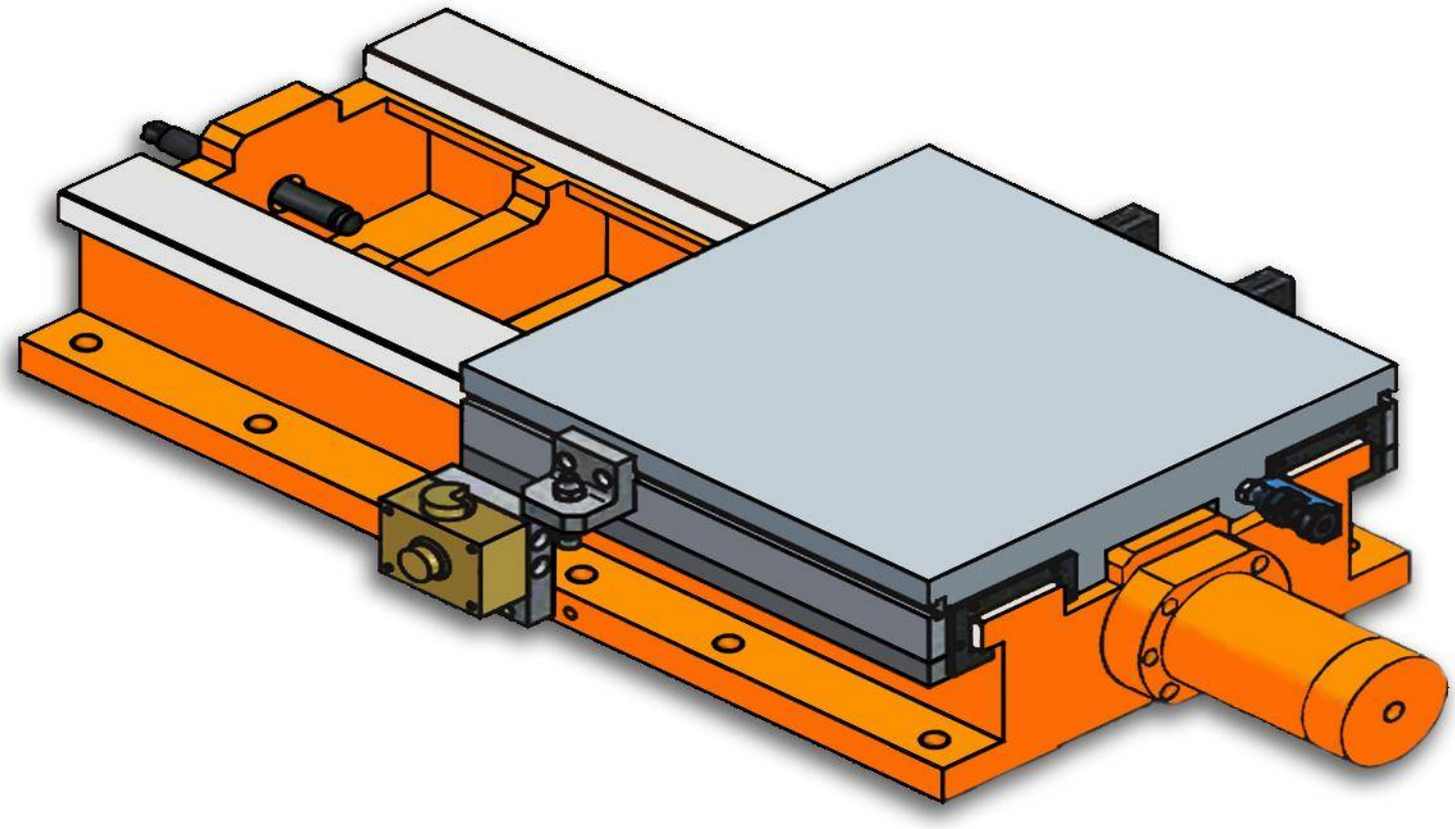

Characteristics & Dimensions

MODEL	HS600-520/885
Profile Width	*600.00*
A	*520.00*
B	*40.00*
C	*220.00*
C1	*220.00*
C2	*220.00*
C3	*145.00*
C4	*-*
C5	*-*
D	*40.00*
E ***(Profile Length)***	*885.00*
F ***(Lead Screw Pace)***	*10 - Ø22*
L ***(Piston Length)***	*195.00*
Maximum Stroke	*345.00*
Device Total Weight ***(kg)***	*455.00*

***** All dimensions are given in millimeters.*

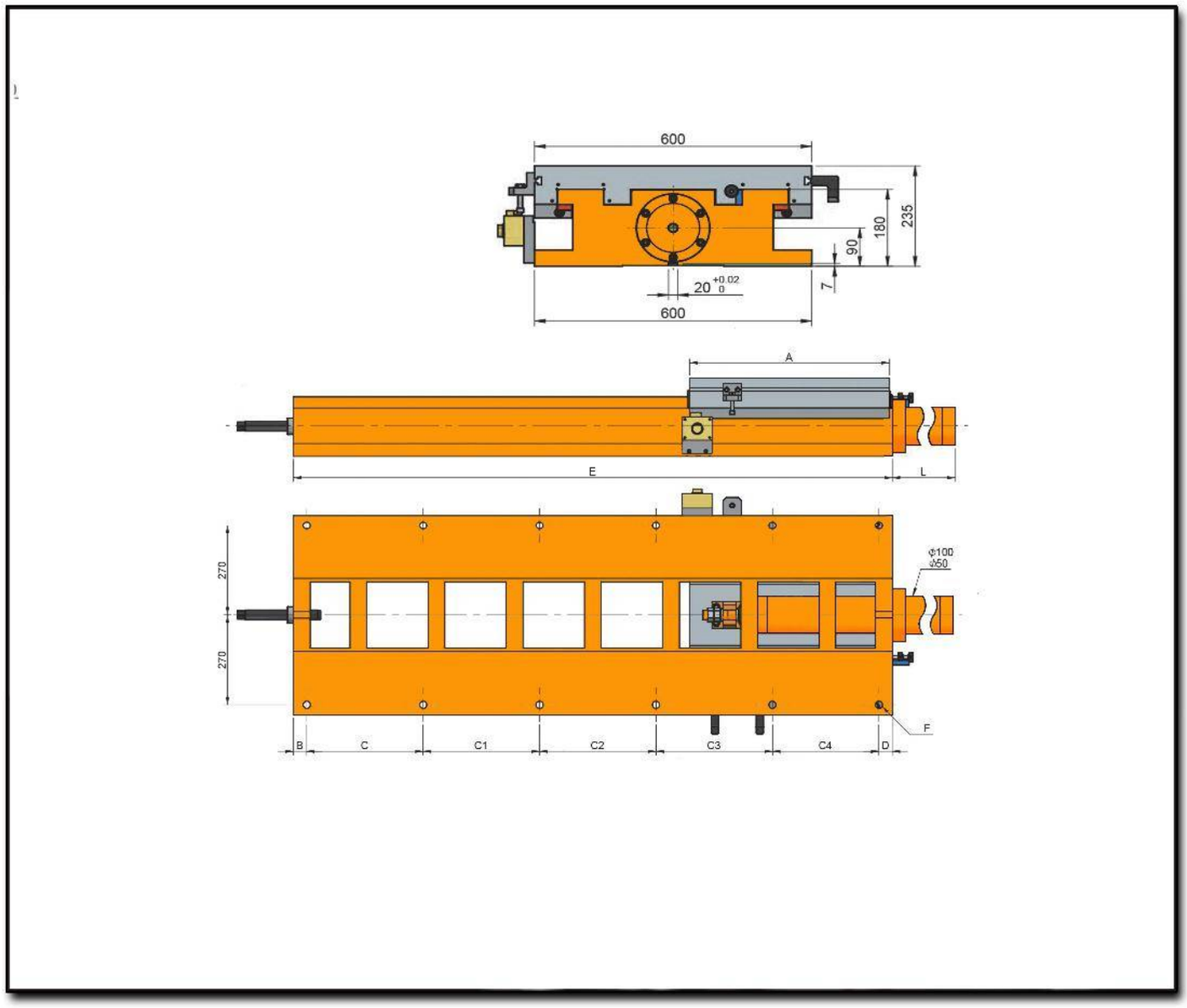
600
235
180
90
7
20 +0.02 0
600
A
E
L
270
270
Φ100
Φ50
F
B
C
C1
C2
C3
C4
D

HS600-600/1200

Hydraulic Slide

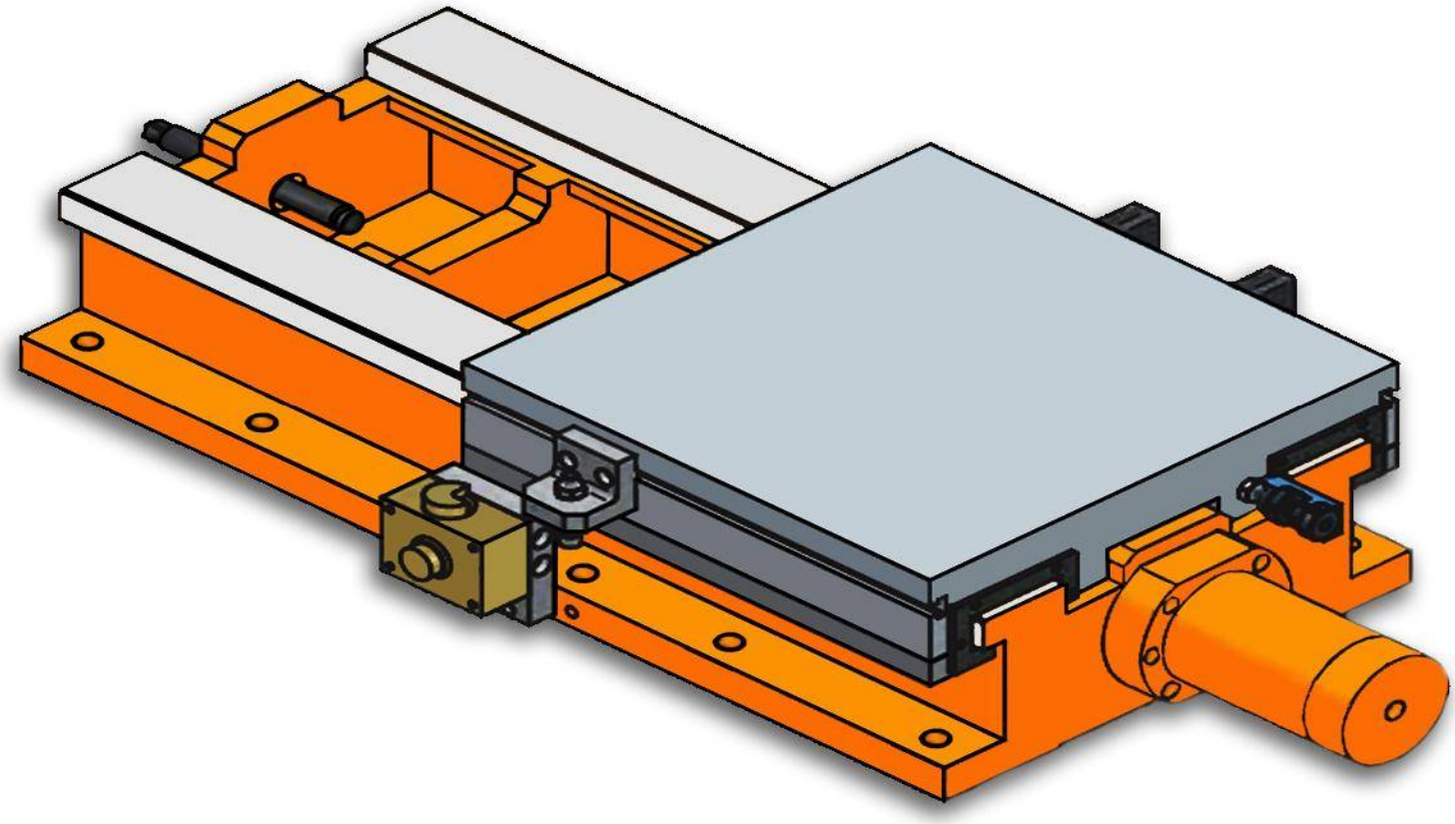

Characteristics & Dimensions

MODEL	HS600-600/1200
Profile Width	*600.00*
A	*600.00*
B	*40.00*
C	*220.00*
C1	*220.00*
C2	*220.00*
C3	*220.00*
C4	*240.00*
C5	*-*
D	*40.00*
E ***(Profile Length)***	*1200.00*
F ***(Lead Screw Pace)***	*12 - Ø22*
L ***(Piston Length)***	*364.00*
Maximum Stroke	*580.00*
Device Total Weight ***(kg)***	*542.00*

***** All dimensions are given in millimeters.*

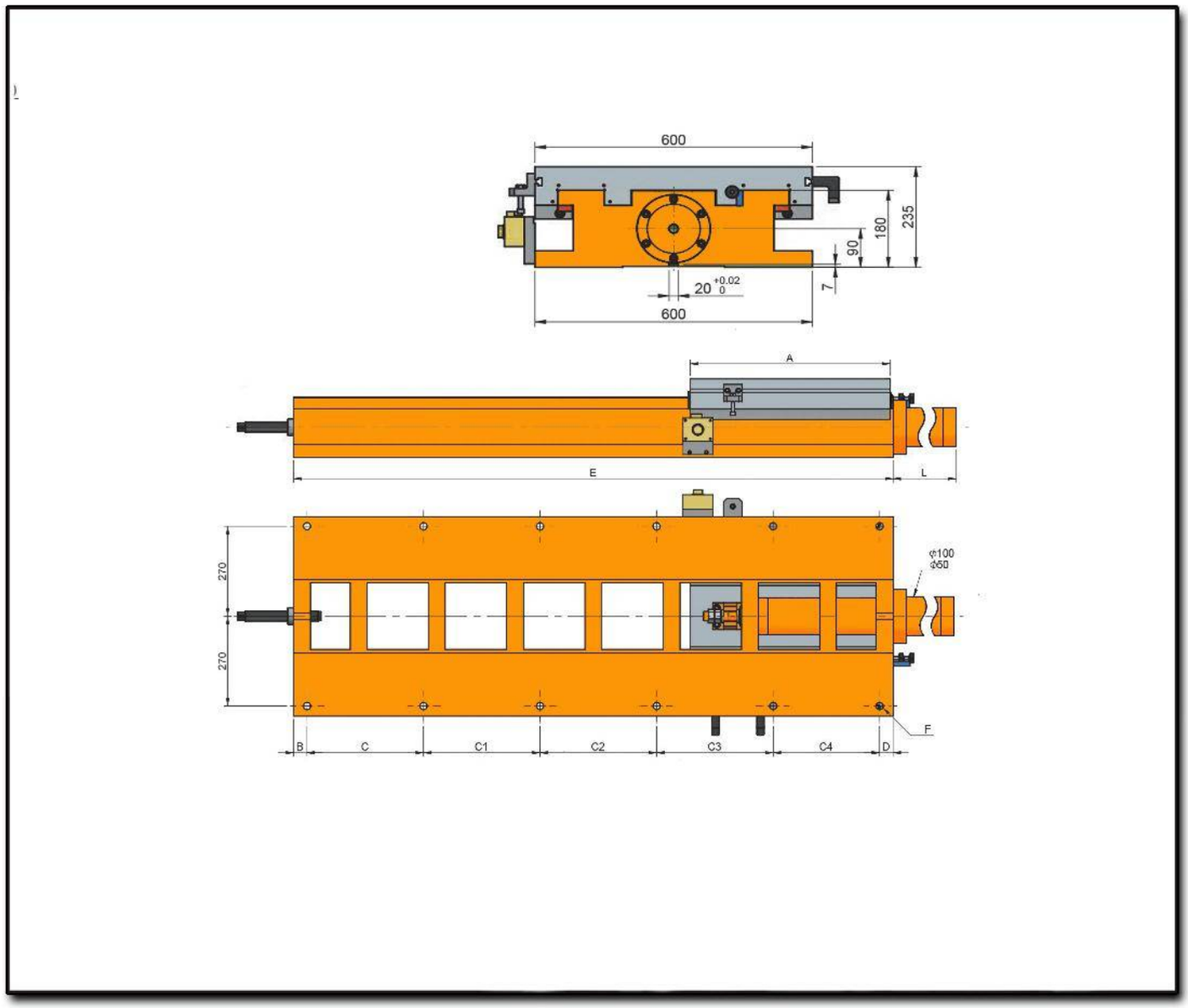
600
235
180
90
7
20 +0.02 0
600
A
E
L
270
270
Φ100
Φ50
F
B
C
C1
C2
C3
C4
D

HS600-600/1800

Hydraulic Slide

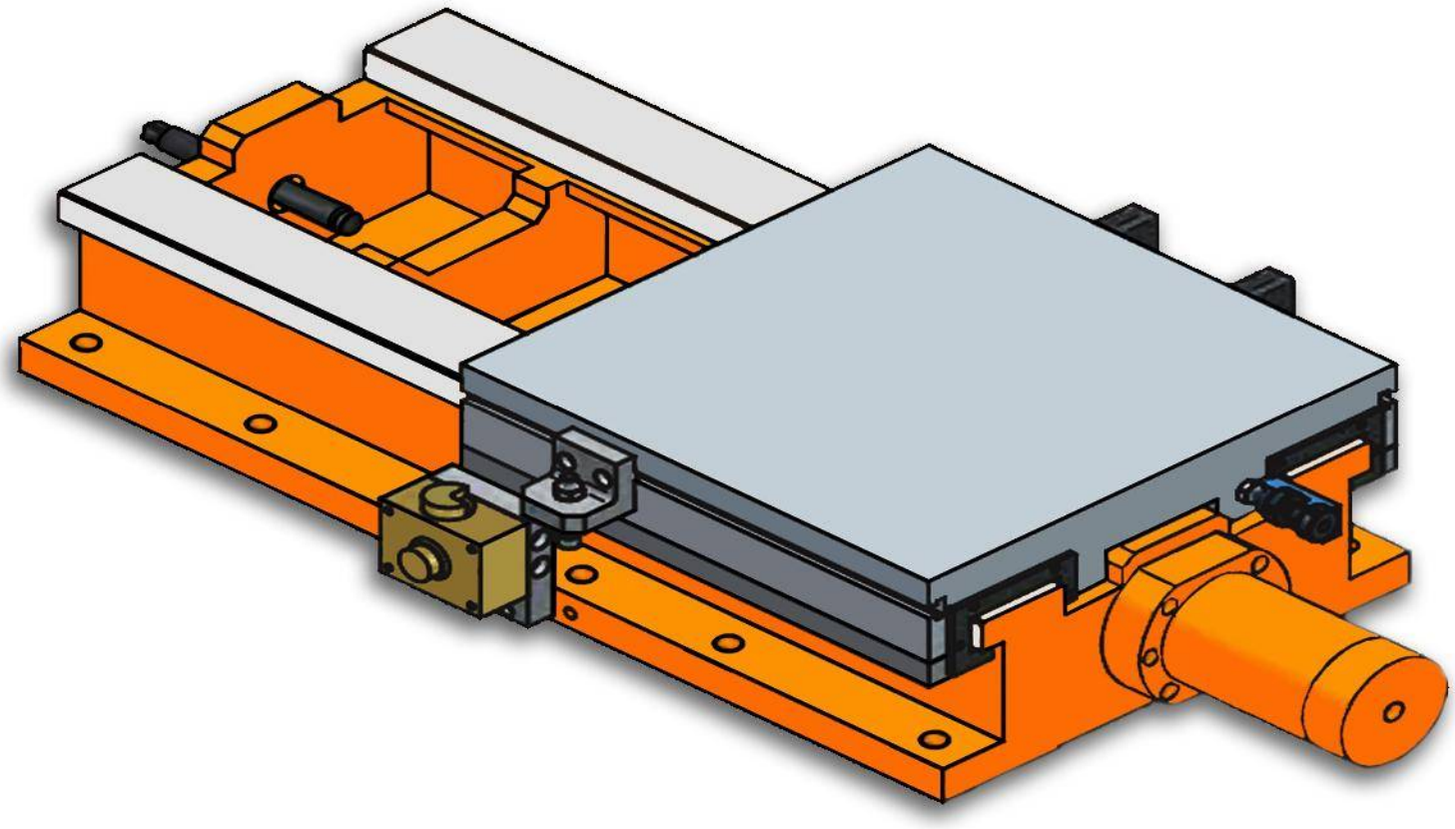

Characteristics & Dimensions

MODEL	HS600-600/1800
Profile Width	*600.00*
A	*600.00*
B	*40.00*
C	*350.00*
C1	*350.00*
C2	*350.00*
C3	*350.00*
C4	*320.00*
C5	*-*
D	*40.00*
E ***(Profile Length)***	*1800.00*
F ***(Lead Screw Pace)***	*12 - Ø22*
L ***(Piston Length)***	*964.00*
Maximum Stroke	*1180.00*
Device Total Weight ***(kg)***	*720.00*

***** All dimensions are given in millimeters.*

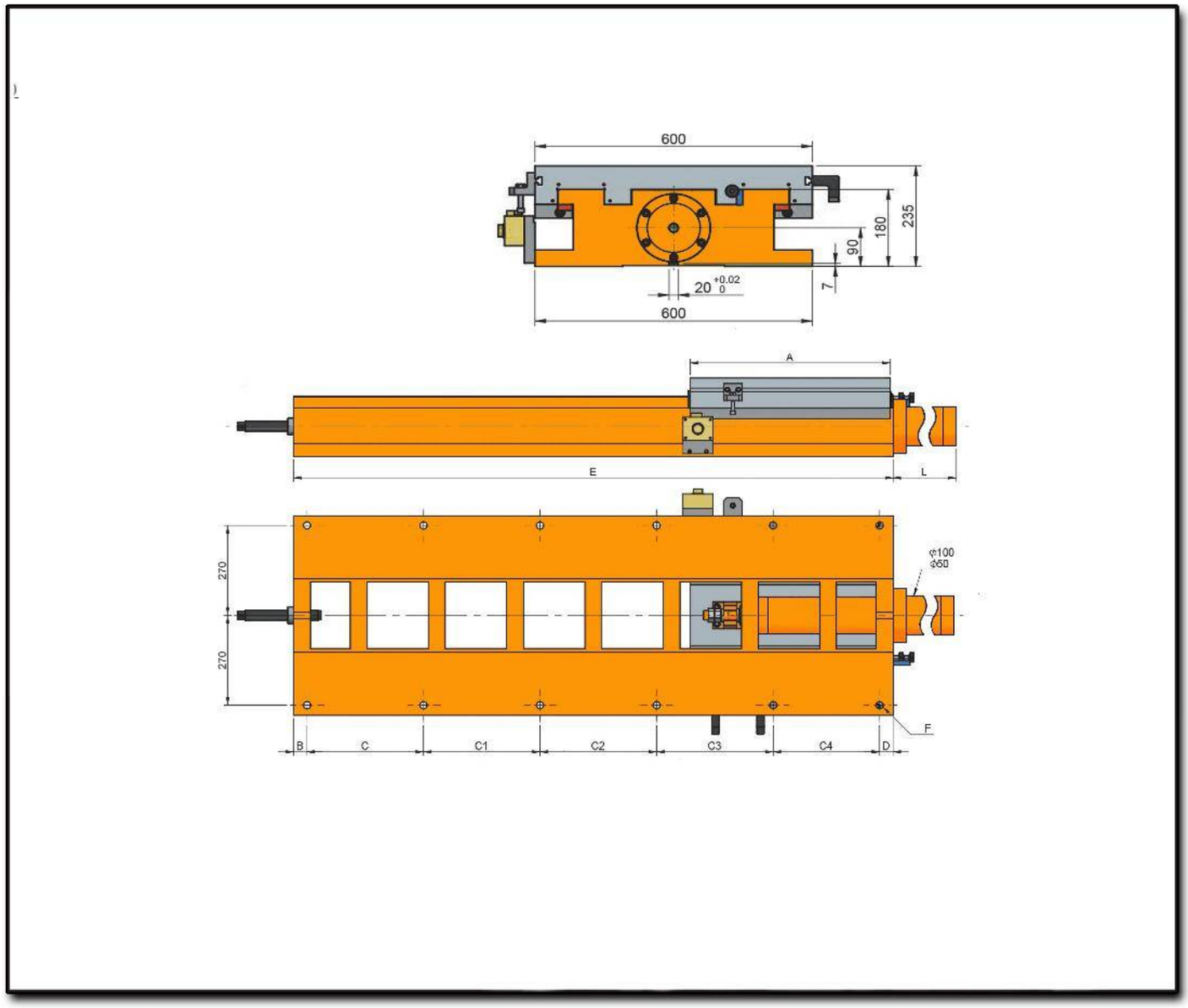
600
235
180
90
7
20 +0.02 0
600
A
E
L
270
270
Φ100
Φ50
F
B
C
C1
C2
C3
C4
D

HS-H SERIES

REINFORCED HYDRAULIC SLIDES

HS250-300/420H

Hi Performance Hydraulic Slide

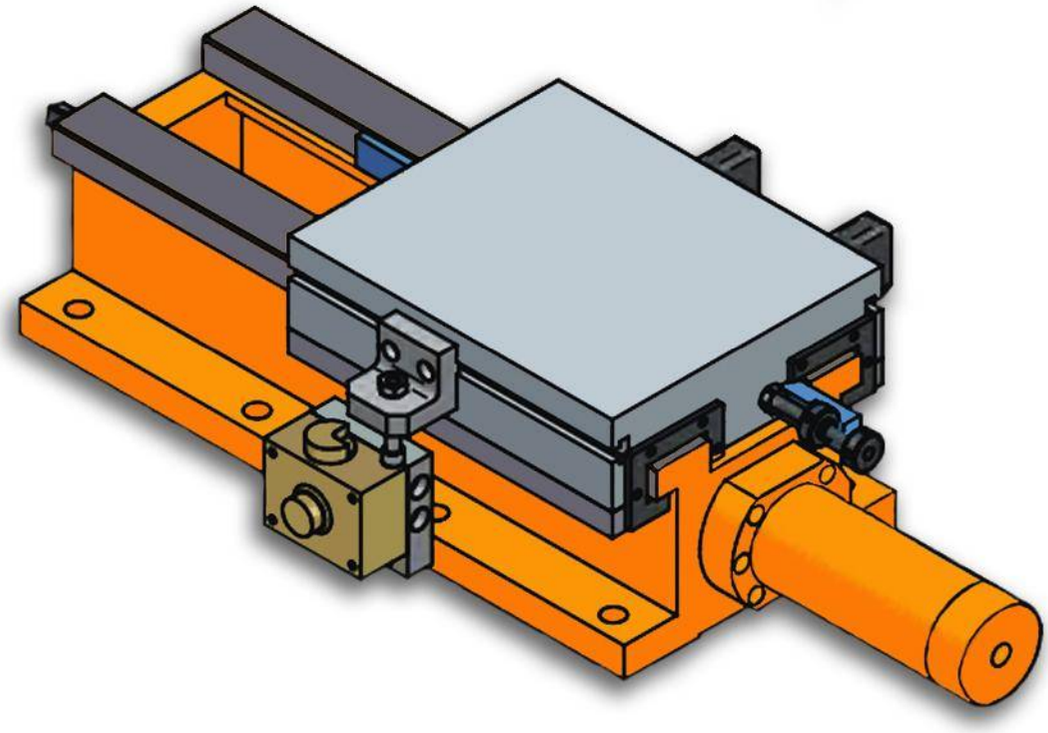

Characteristics & Dimensions

MODEL	HS250-300/420H
Profile Width	*250.00*
A	*300.00*
B	*35.00*
C	*150.00*
C1	*200.00*
C2	-
C3	-
C4	-
C5	-
D	*35.00*
E ***(Profile Length)***	*420.00*
F ***(Lead Screw Pace)***	*6 - Ø18*
L ***(Piston Length)***	*75.00*
Maximum Stroke	*100.00*
Device Total Weight ***(kg)***	*92.00*

***** All dimensions are given in millimeters.*

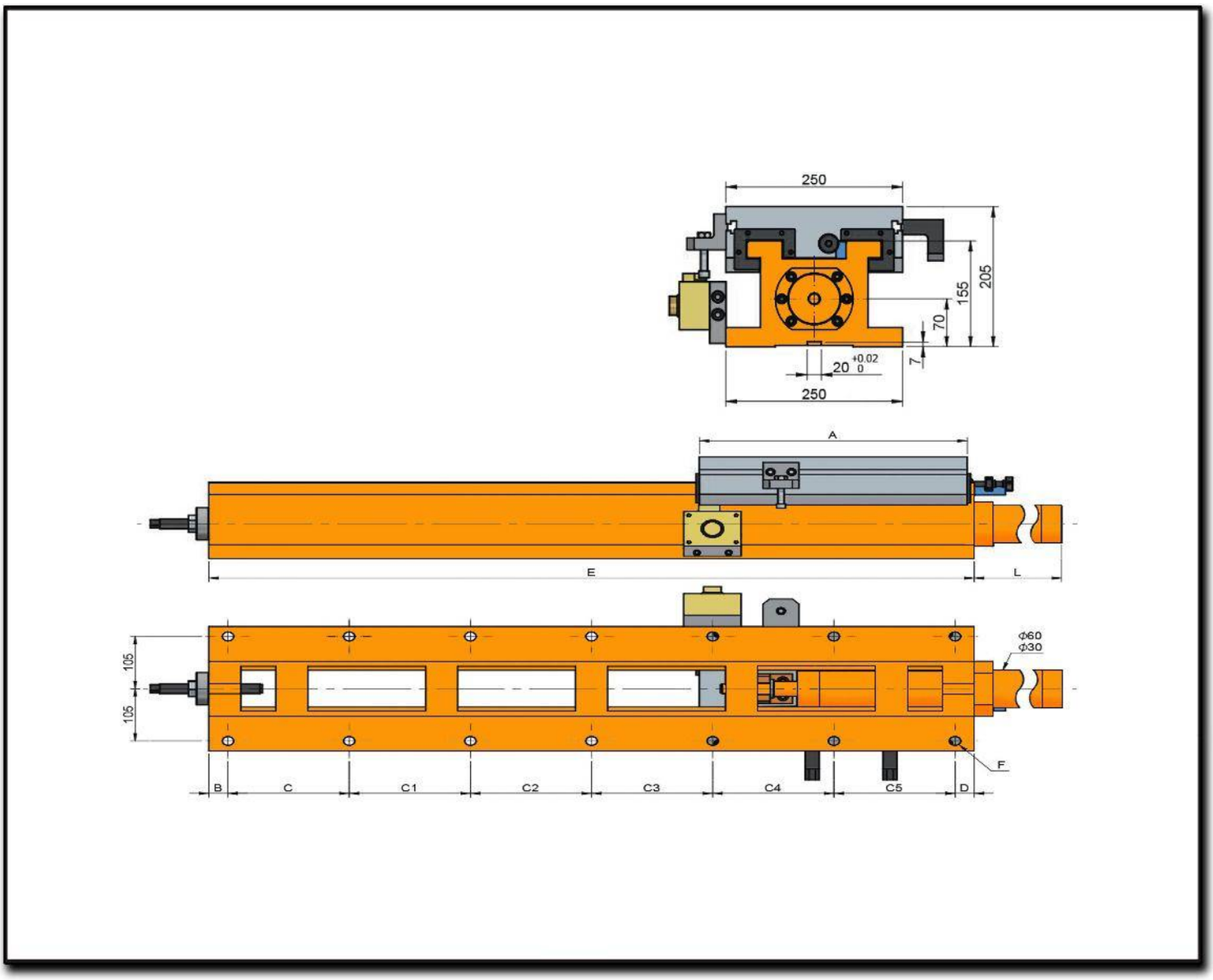
250
205
155
70
7
20 +0.02 0
250
A
E
L
105
105
Φ60
Φ30
F
B
C
C1
C2
C3
C4
C5
D

HS250-300/560H

Hi Performance Hydraulic Slide

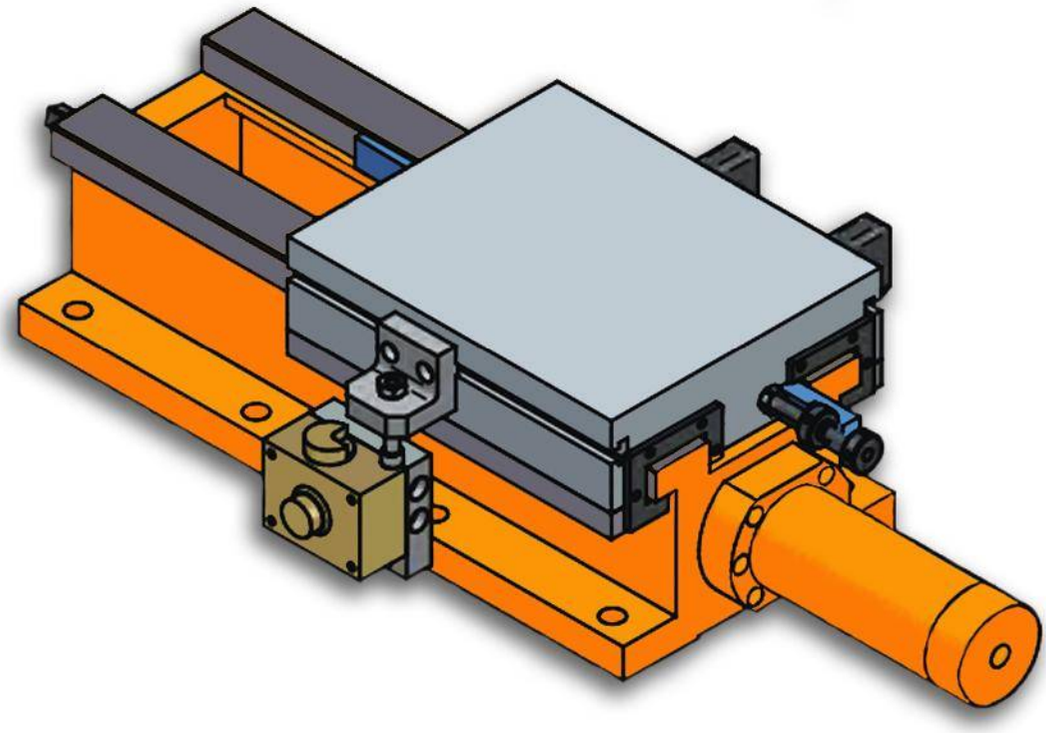

Characteristics & Dimensions

MODEL	HS250-300/560H
Profile Width	*250.00*
A	*300.00*
B	*35.00*
C	*165.00*
C1	*165.00*
C2	*165.00*
C3	*-*
C4	*-*
C5	*-*
D	*30.00*
E ***(Profile Length)***	*560.00*
F ***(Lead Screw Pace)***	*8 - Ø18*
L ***(Piston Length)***	*224.00*
Maximum Stroke	*240.00*
Device Total Weight ***(kg)***	*100.00*

***** All dimensions are given in millimeters.*

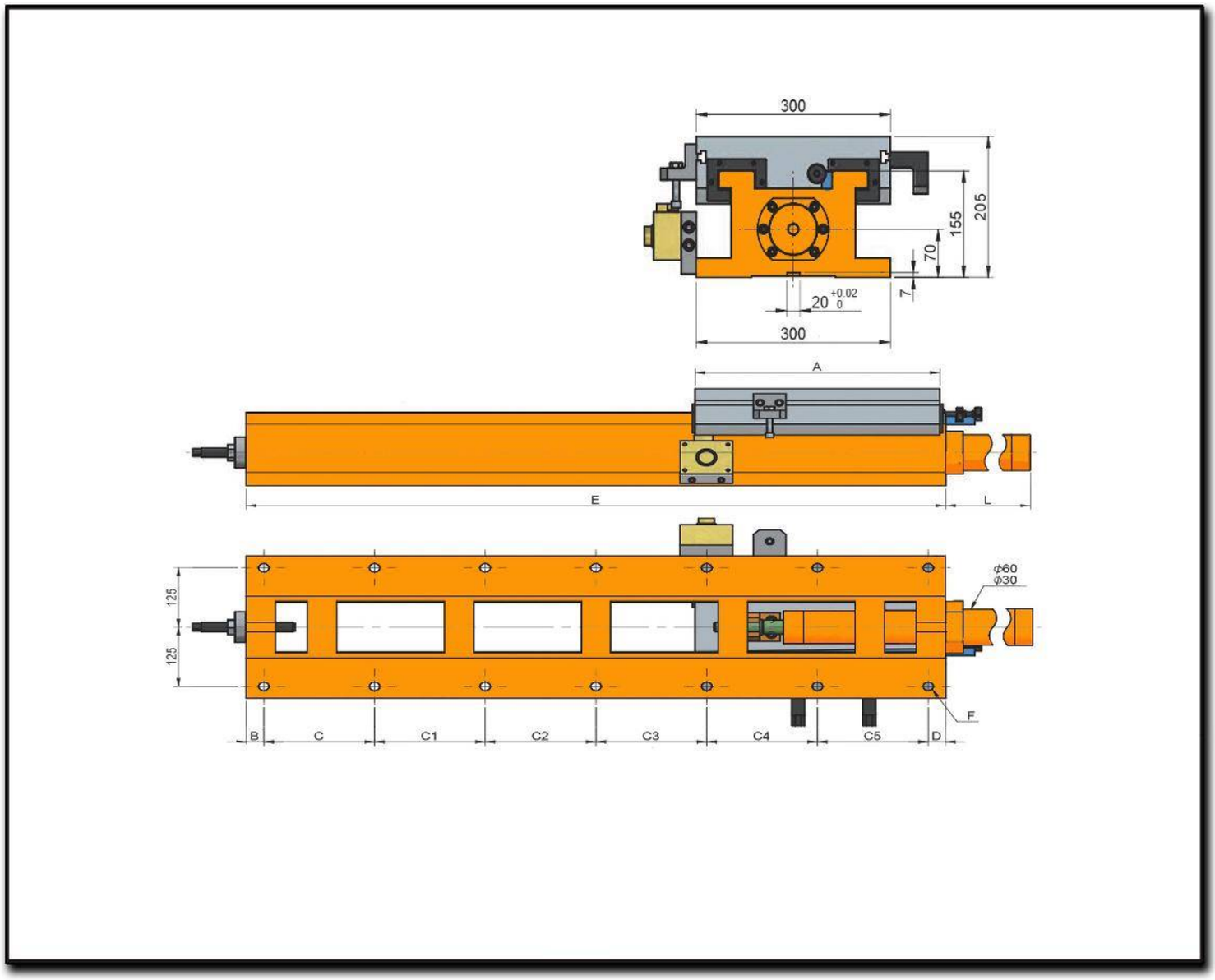
300
205
155
70
7
20 +0.02 0
300
A
E
L
125
125
Φ60
Φ30
F
B
C
C1
C2
C3
C4
C5
D

HS250-420/560H

Hi Performance Hydraulic Slide

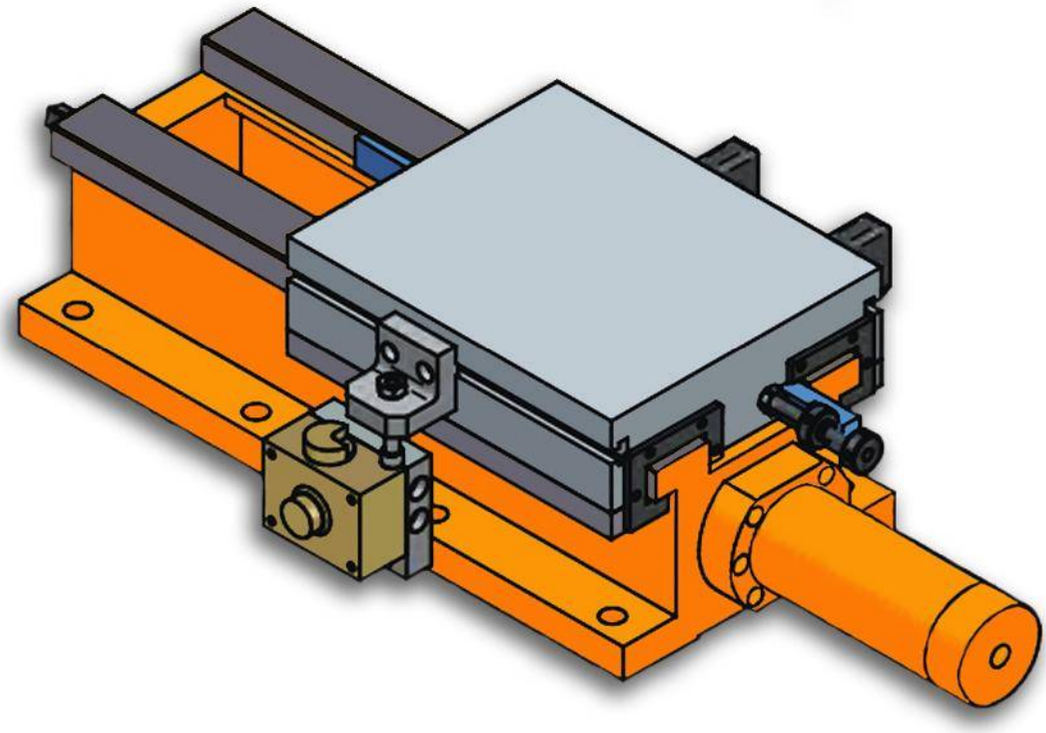

Characteristics & Dimensions

MODEL	HS250-420/560H
Profile Width	*250.00*
A	*420.00*
B	*35.00*
C	*165.00*
C1	*165.00*
C2	*165.00*
C3	*-*
C4	*-*
C5	*-*
D	*30.00*
E ***(Profile Length)***	*560.00*
F ***(Lead Screw Pace)***	*8 - Ø18*
L ***(Piston Length)***	*75.00*
Maximum Stroke	*120.00*
Device Total Weight ***(kg)***	*108.00*

***** All dimensions are given in millimeters.*

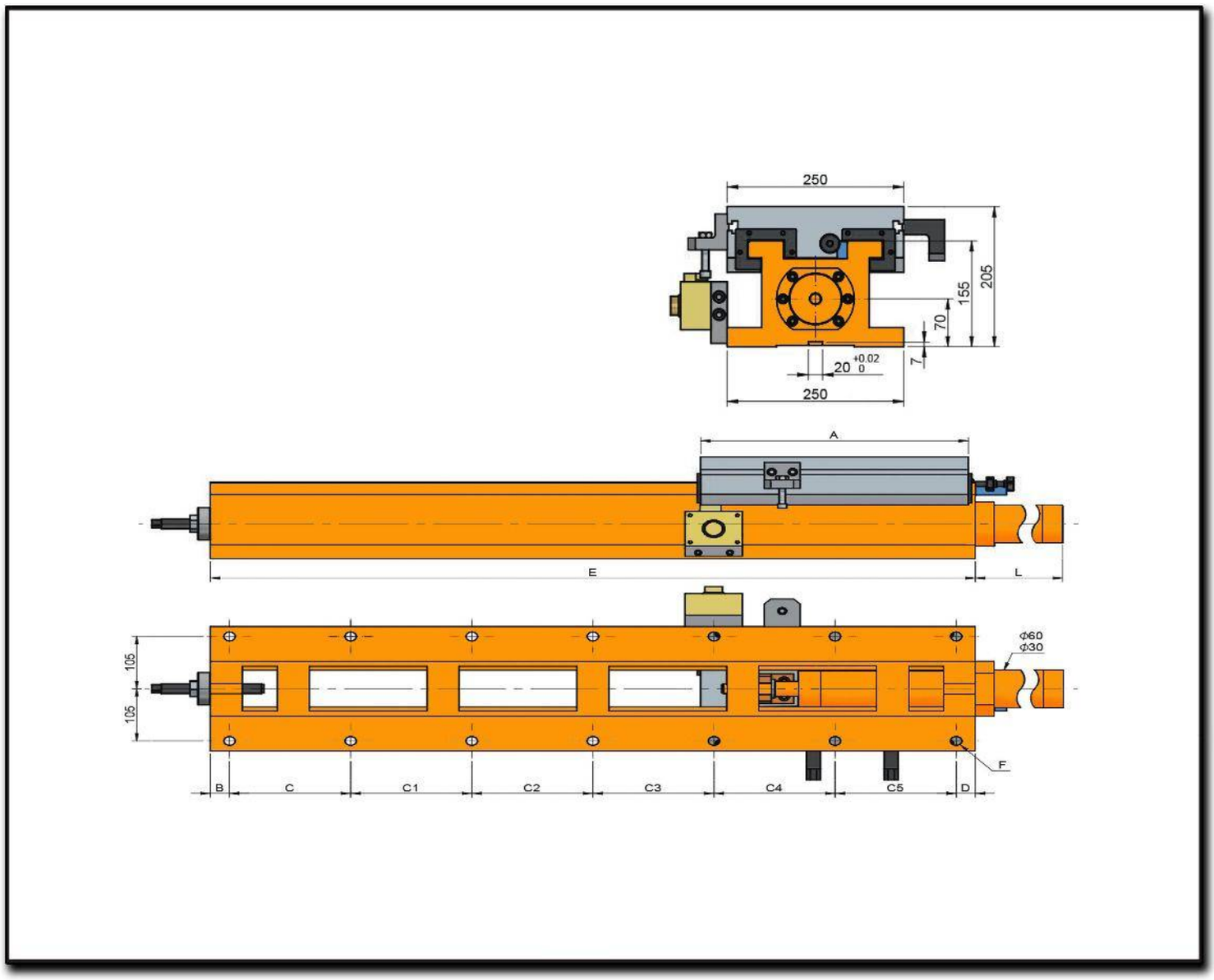
250
205
155
70
7
20 +0.02 0
250
A
E
L
105
105
Φ60
Φ30
F
B
C
C1
C2
C3
C4
C5
D

HS250-420/670H

Hi Performance Hydraulic Slide

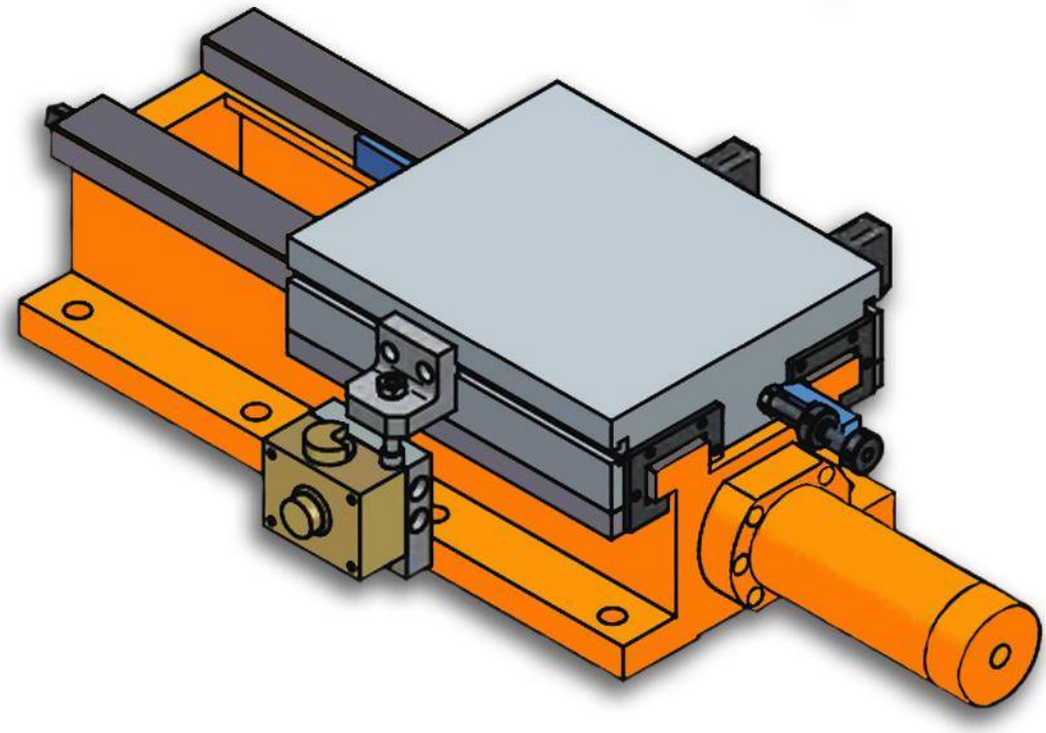

Characteristics & Dimensions

MODEL	HS250-420/670H
Profile Width	*250.00*
A	*420.00*
B	*35.00*
C	*140.00*
C1	*140.00*
C2	*140.00*
C3	*180.00*
C4	*-*
C5	*-*
D	*35.00*
E ***(Profile Length)***	*670.00*
F ***(Lead Screw Pace)***	*10 - Ø18*
L ***(Piston Length)***	*75.00*
Maximum Stroke	*230.00*
Device Total Weight ***(kg)***	*130.00*

***** All dimensions are given in millimeters.*

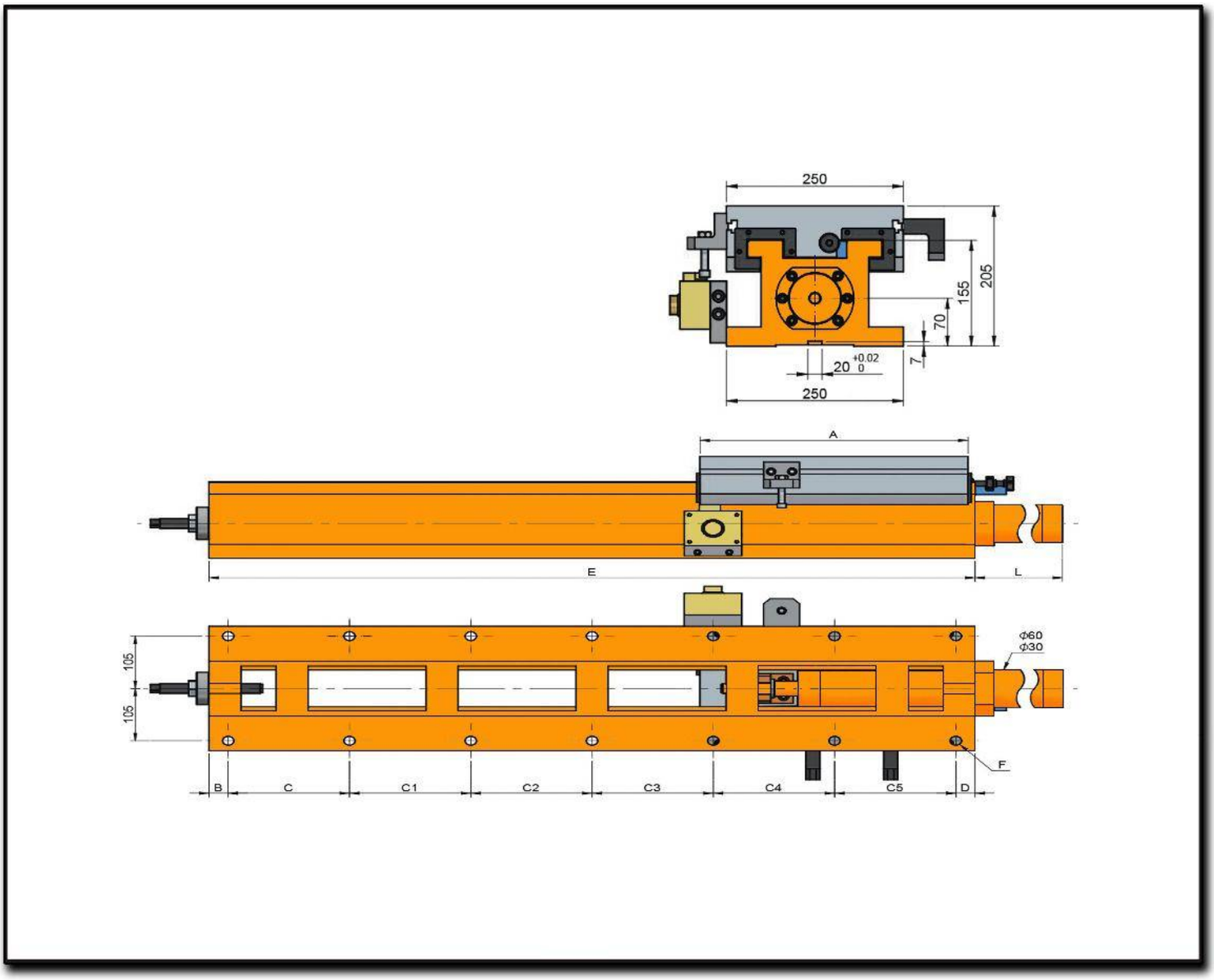
250
205
155
70
7
20 +0.02 0
250
A
E
L
105
105
Φ60
Φ30
F
B
C
C1
C2
C3
C4
C5
D

HS250-420/750H

Hi Performance Hydraulic Slide

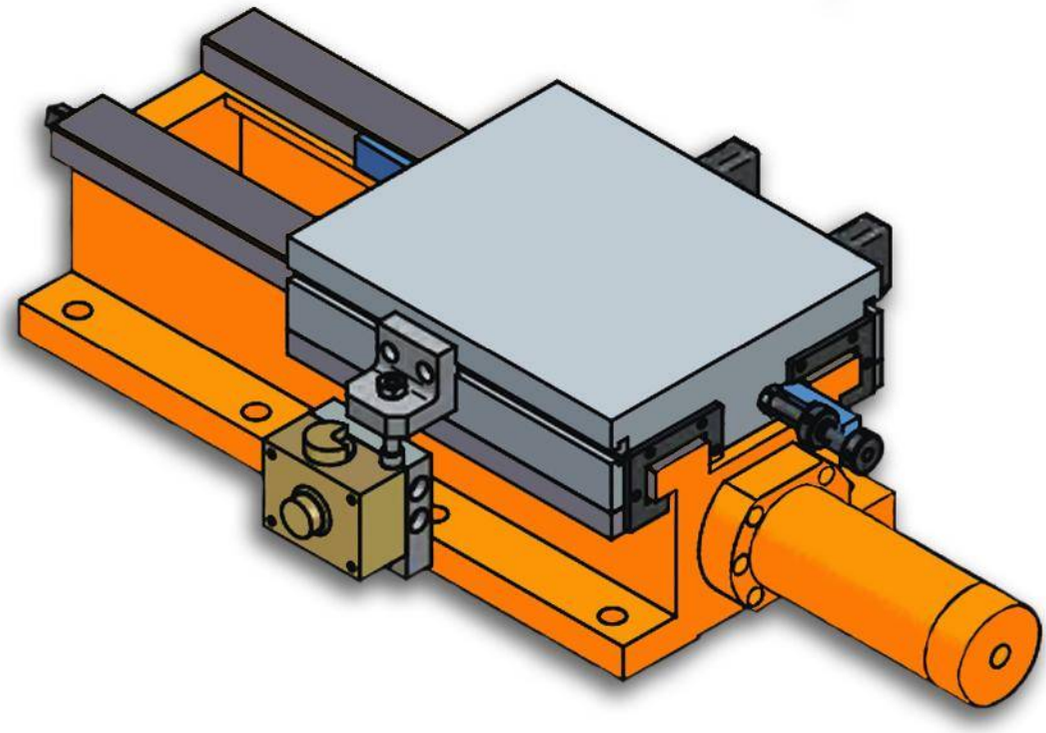

Characteristics & Dimensions

MODEL	HS250-420/750H
Profile Width	*250.00*
A	*420.00*
B	*25.00*
C	*140.00*
C1	*140.00*
C2	*140.00*
C3	*140.00*
C4	*140.00*
C5	*-*
D	*25.00*
E ***(Profile Length)***	*750.00*
F ***(Lead Screw Pace)***	*12 - Ø18*
L ***(Piston Length)***	*368.00*
Maximum Stroke	*500.00*
Device Total Weight ***(kg)***	*178.00*

***** All dimensions are given in millimeters.*

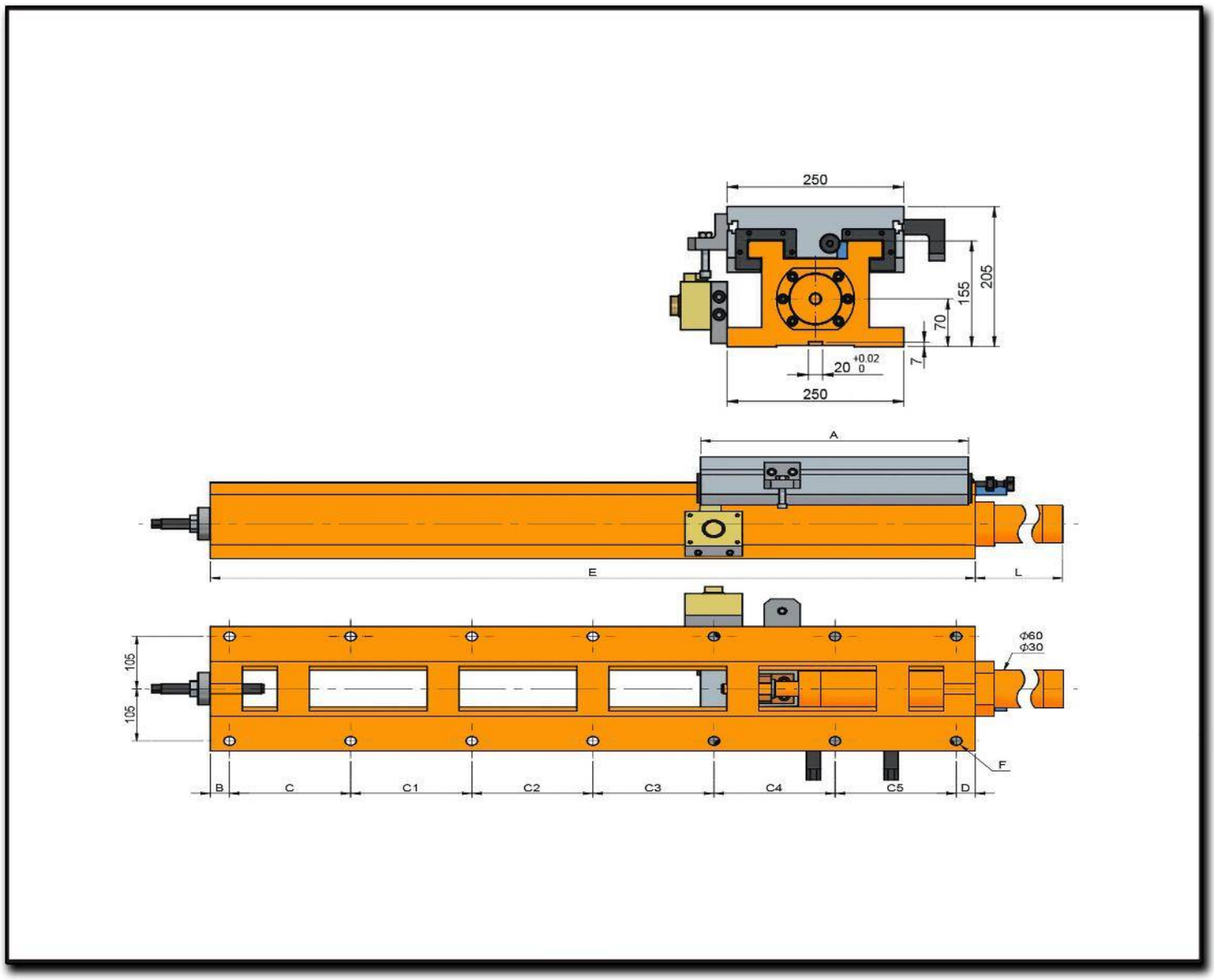
250
205
155
70
7
20 +0.02 0
250
A
E
L
105
105
Φ60
Φ30
F
B
C
C1
C2
C3
C4
C5
D

HS250-420/940H

Hi Performance Hydraulic Slide

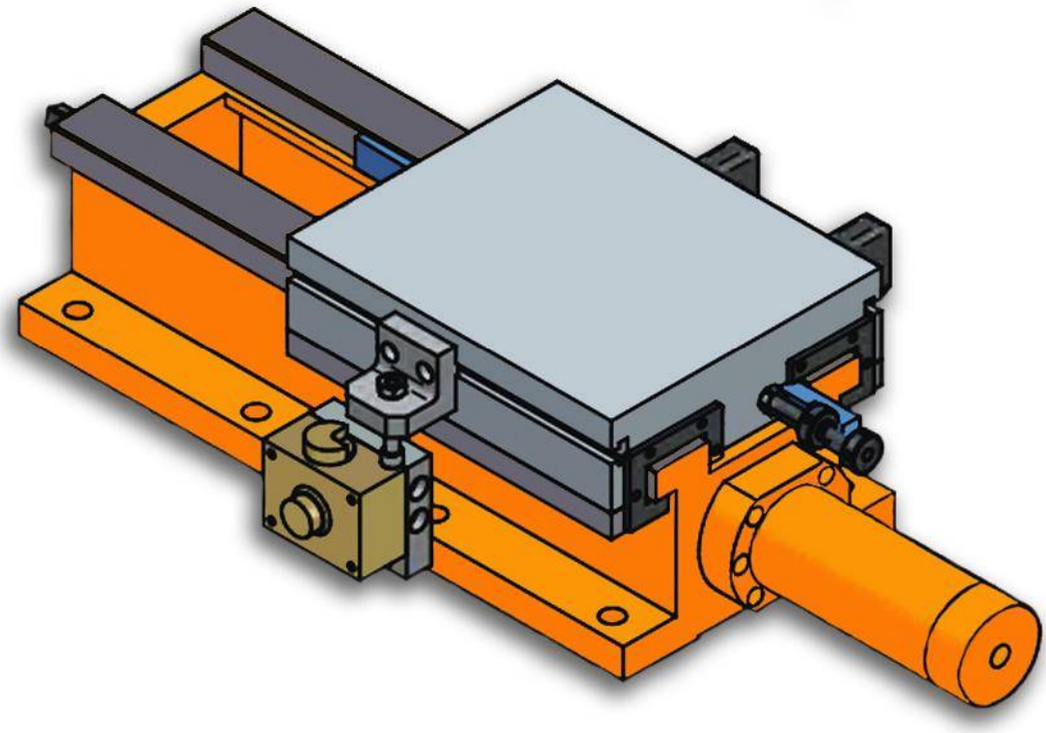

Characteristics & Dimensions

MODEL	HS250-420/940H
Profile Width	*250.00*
A	*420.00*
B	*35.00*
C	*175.00*
C1	*175.00*
C2	*175.00*
C3	*175.00*
C4	*175.00*
C5	*-*
D	*30.00*
E ***(Profile Length)***	*940.00*
F ***(Lead Screw Pace)***	*12 - Ø18*
L ***(Piston Length)***	*368.00*
Maximum Stroke	*500.00*
Device Total Weight ***(kg)***	*178.00*

***** All dimensions are given in millimeters.*

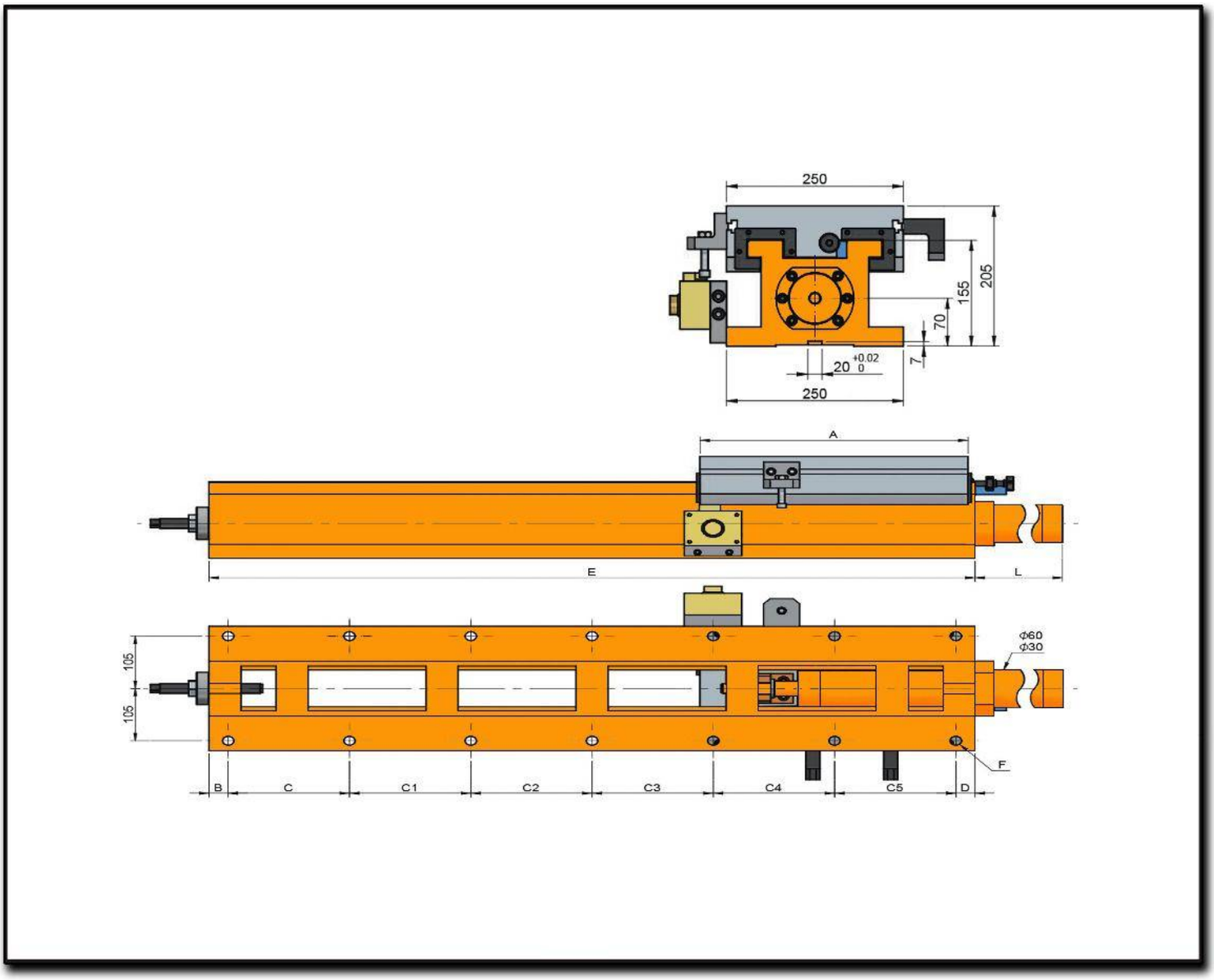
250
205
155
70
7
20 +0.02 0
250
A
E
L
105
105
Φ60
Φ30
F
B
C
C1
C2
C3
C4
C5
D

HS250-420/1200H

Hi Performance Hydraulic Slide

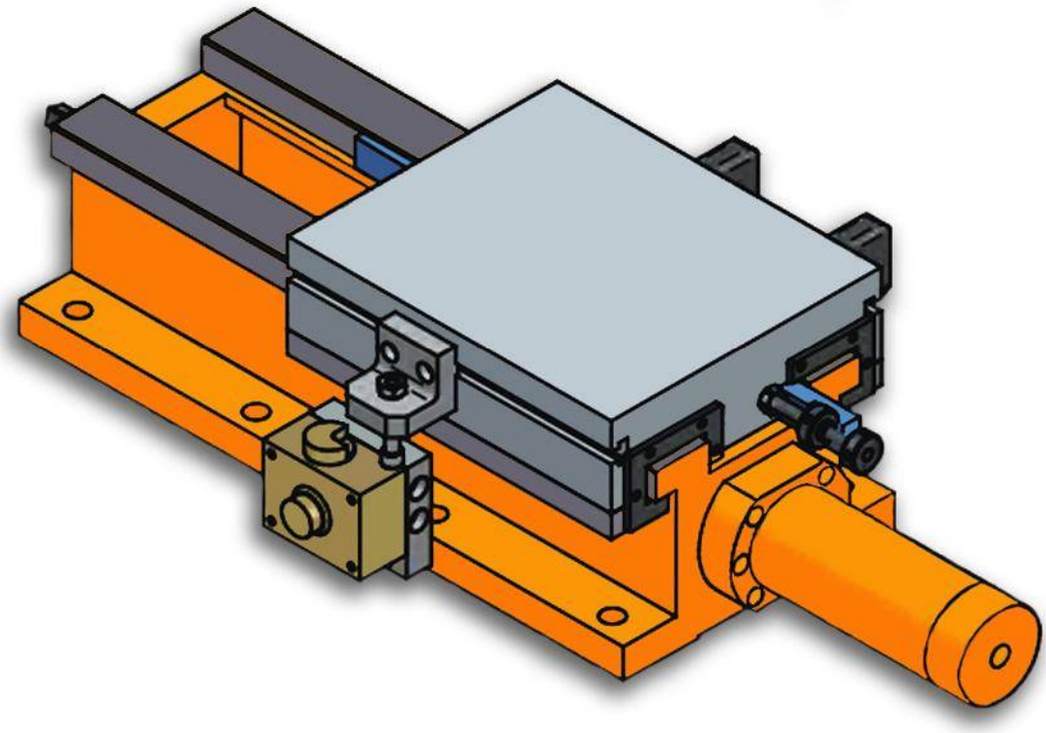

Characteristics & Dimensions

MODEL	HS250-420/1200H
Profile Width	*250.00*
A	*420.00*
B	*30.00*
C	*190.00*
C1	*190.00*
C2	*190.00*
C3	*190.00*
C4	*190.00*
C5	*190.00*
D	*30.00*
E ***(Profile Length)***	*1200.00*
F ***(Lead Screw Pace)***	*14 - Ø18*
L ***(Piston Length)***	*628.00*
Maximum Stroke	*760.00*
Device Total Weight ***(kg)***	*215.00*

***** All dimensions are given in millimeters.*

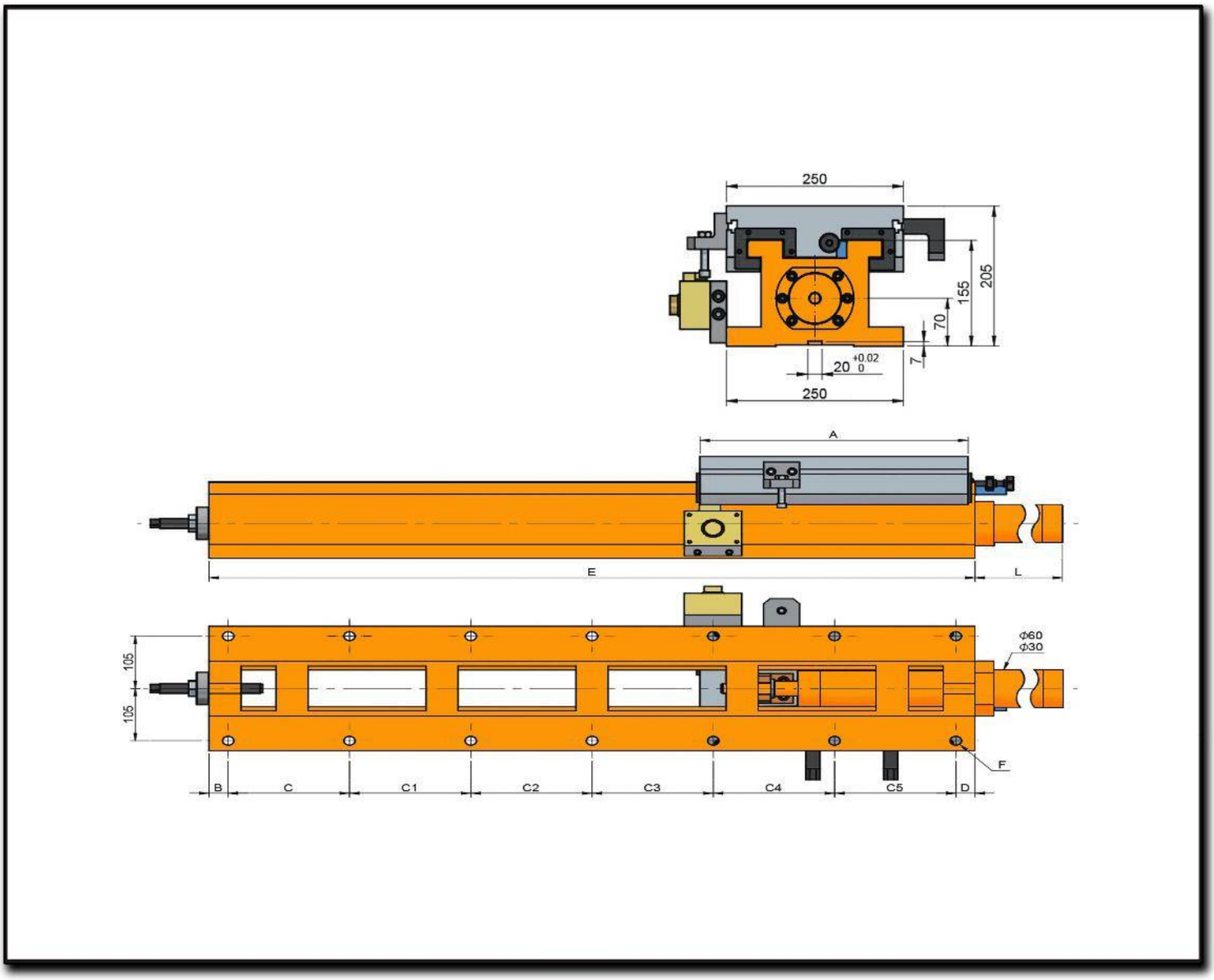
250
205
155
70
7
20 +0.02 0
250
A
E
L
105
105
Φ60
Φ30
F
B
C
C1
C2
C3
C4
C5
D

HS300-300/420H

Hi Performance Hydraulic Slide

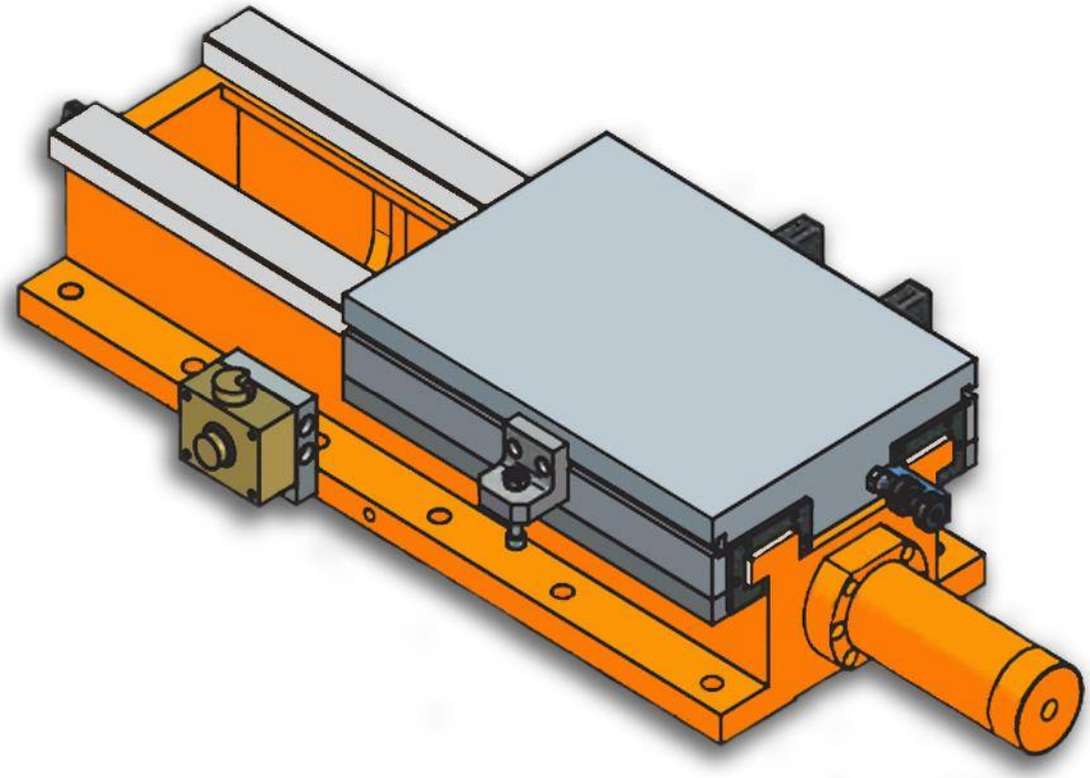

Characteristics & Dimensions

MODEL	HS250-300/420H
Profile Width	*250.00*
A	*300.00*
B	*35.00*
C	*150.00*
C1	*200.00*
C2	-
C3	-
C4	-
C5	-
D	*35.00*
E ***(Profile Length)***	*420.00*
F ***(Lead Screw Pace)***	*6 - Ø18*
L ***(Piston Length)***	*75.00*
Maximum Stroke	*100.00*
Device Total Weight ***(kg)***	*92.00*

***** All dimensions are given in millimeters.*

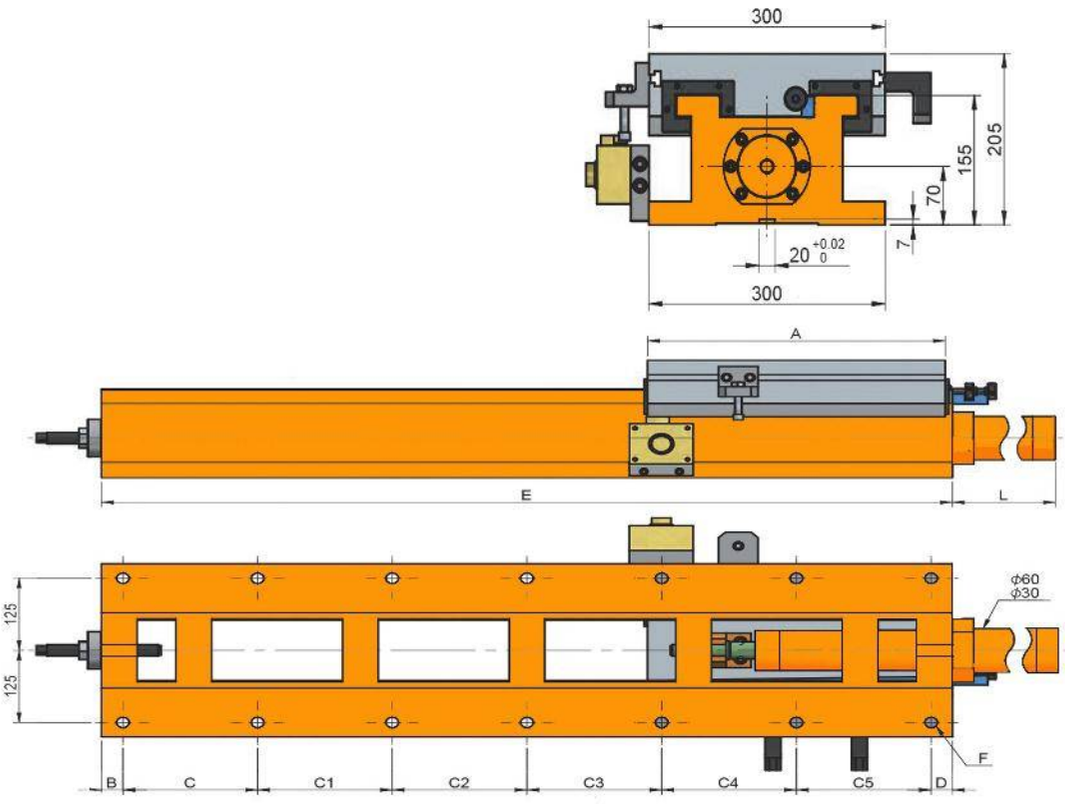
300
205
155
70
7
20 +0.02 0
300
A
E
L
125
125
ϕ60
ϕ30
F
B
C
C1
C2
C3
C4
C5
D

HS300-360/560H

Hi Performance Hydraulic Slide

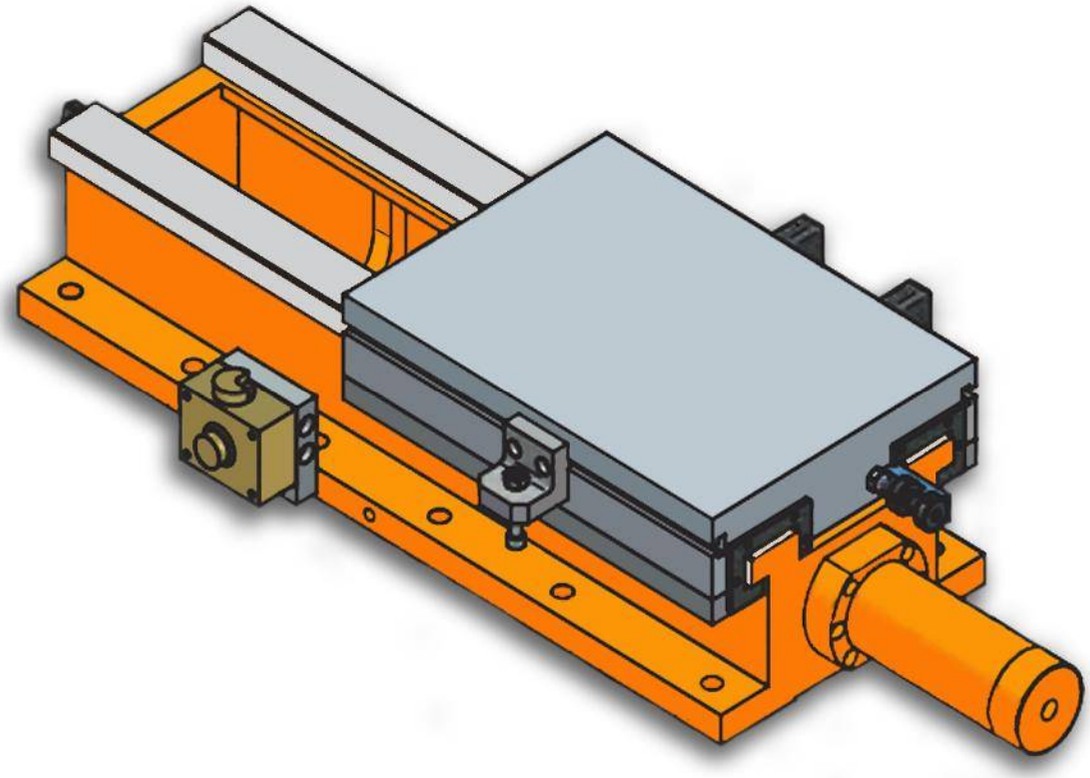

Characteristics & Dimensions

MODEL	HS300-360/560H
Profile Width	*300.00*
A	*360.00*
B	*35.00*
C	*165.00*
C1	*165.00*
C2	*165.00*
C3	*-*
C4	*-*
C5	*-*
D	*30.00*
E ***(Profile Length)***	*560.00*
F ***(Lead Screw Pace)***	*8 - Ø18*
L ***(Piston Length)***	*75.00*
Maximum Stroke	*180.00*
Device Total Weight ***(kg)***	*140.00*

***** All dimensions are given in millimeters.*

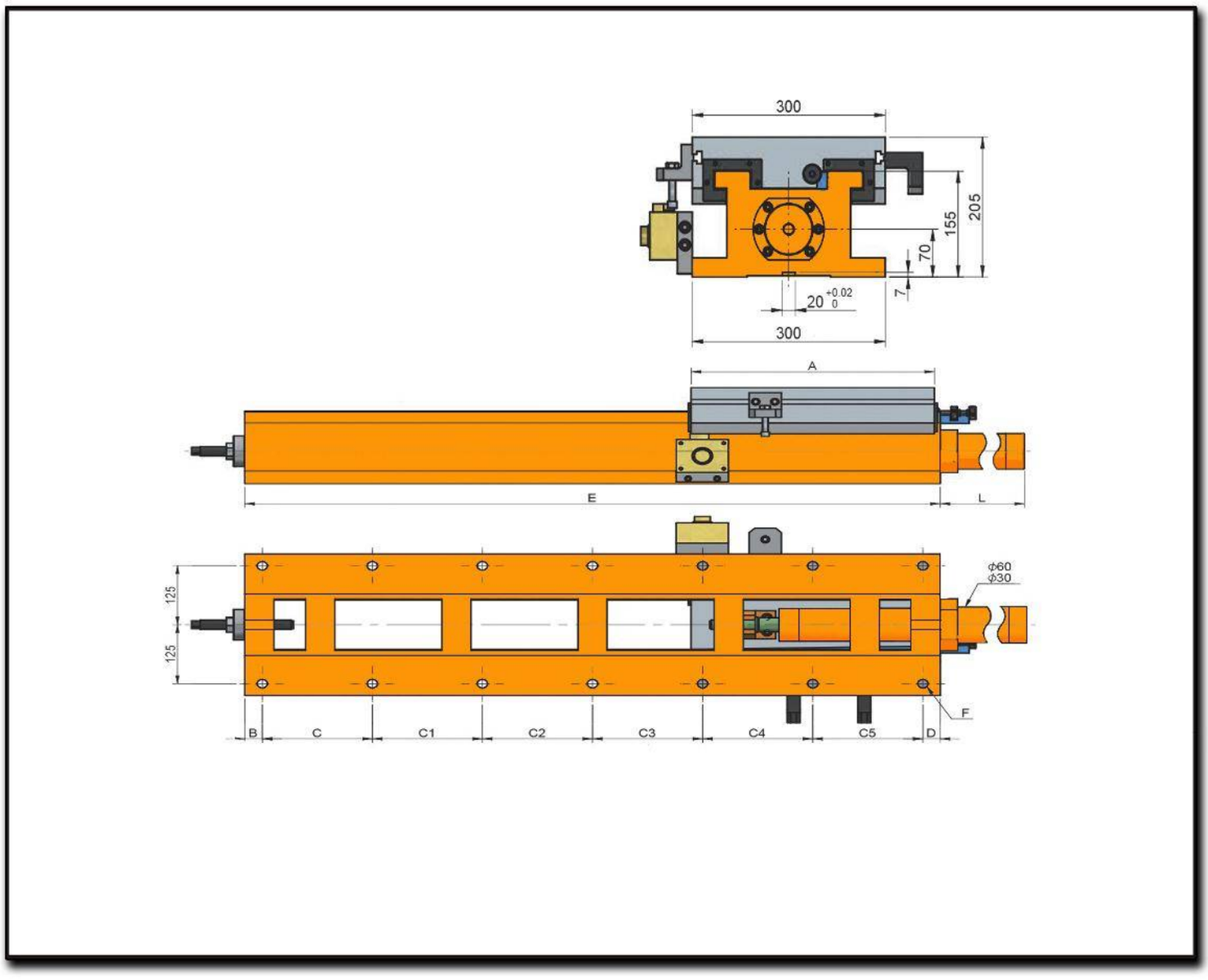
300
205
155
70
7
20 +0.02 0
300
A
E
L
125
125
ϕ60
ϕ30
F
B
C
C1
C2
C3
C4
C5
D

HS300-420/560H

Hi Performance Hydraulic Slide

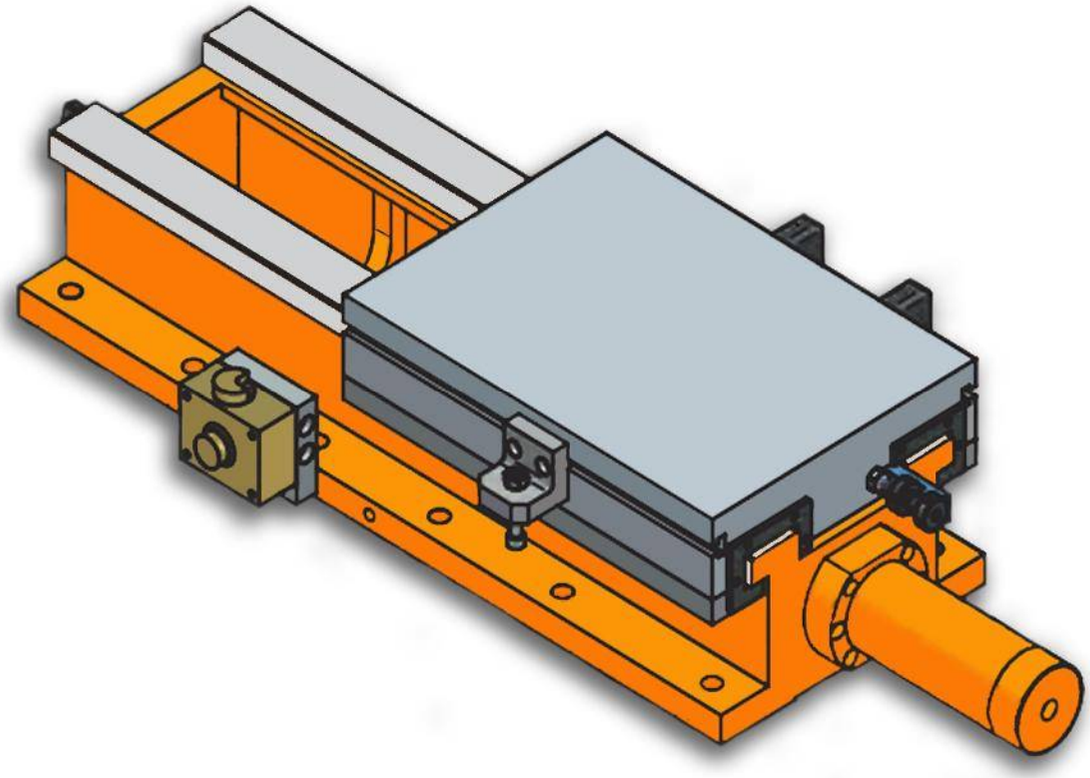

Characteristics & Dimensions

MODEL	HS300-420/560H
Profile Width	*300.00*
A	*420.00*
B	*165.00*
C	*165.00*
C1	*165.00*
C2	-
C3	-
C4	-
C5	-
D	*30.00*
E ***(Profile Length)***	*560.00*
F ***(Lead Screw Pace)***	*8 - Ø18*
L ***(Piston Length)***	*75.00*
Maximum Stroke	*120.00*
Device Total Weight ***(kg)***	*144.00*

***** All dimensions are given in millimeters.*

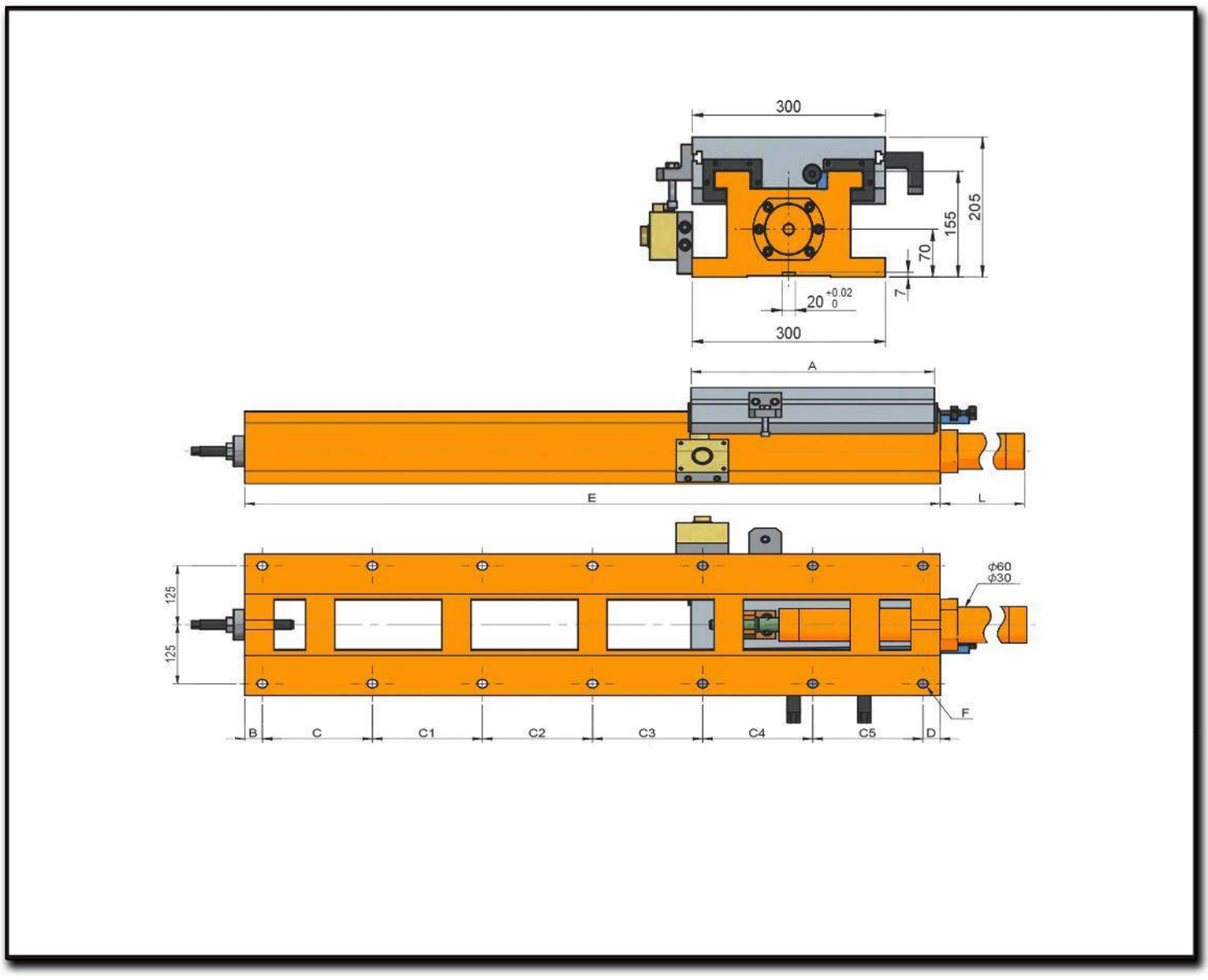
300
205
155
70
7
20 +0.02 0
300
A
E
L
125
125
ϕ60
ϕ30
F
B
C
C1
C2
C3
C4
C5
D

HS300-420/670H

Hi Performance Hydraulic Slide

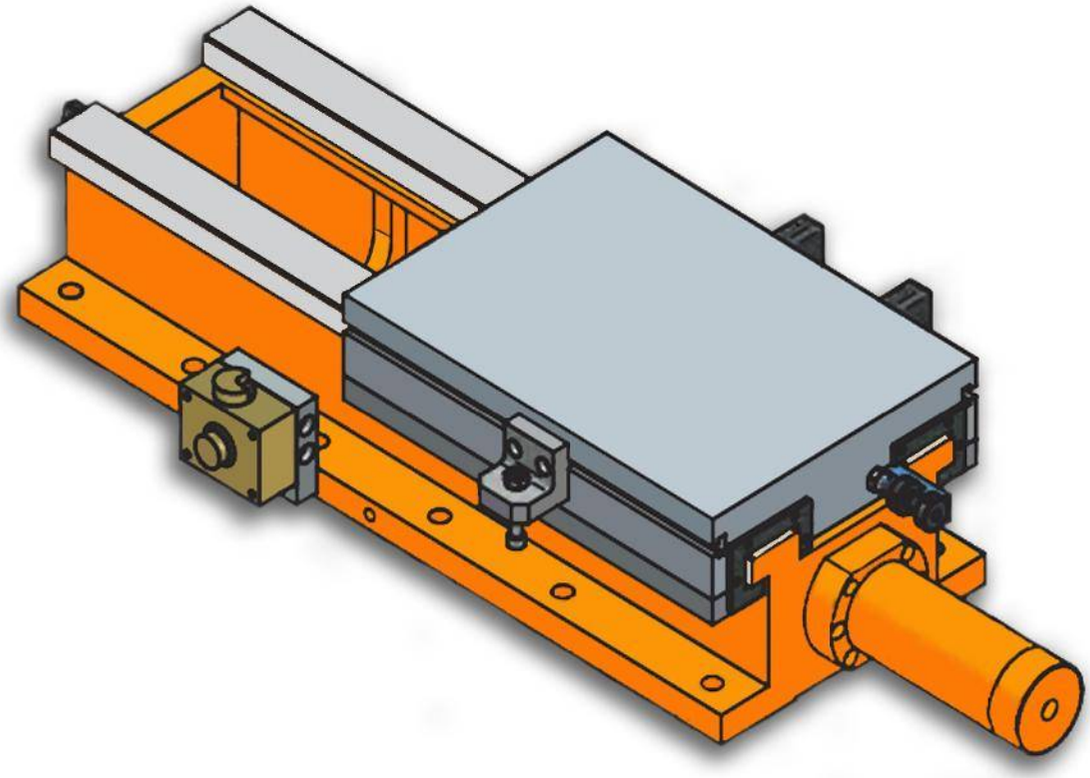

Characteristics & Dimensions

MODEL	HS300-420/670H
Profile Width	*300.00*
A	*420.00*
B	*35.00*
C	*140.00*
C1	*140.00*
C2	*140.00*
C3	*180.00*
C4	*-*
C5	*-*
D	*35.00*
E ***(Profile Length)***	*670.00*
F ***(Lead Screw Pace)***	*10 - Ø18*
L ***(Piston Length)***	*75.00*
Maximum Stroke	*230.00*
Device Total Weight ***(kg)***	*178.00*

***** All dimensions are given in millimeters.*

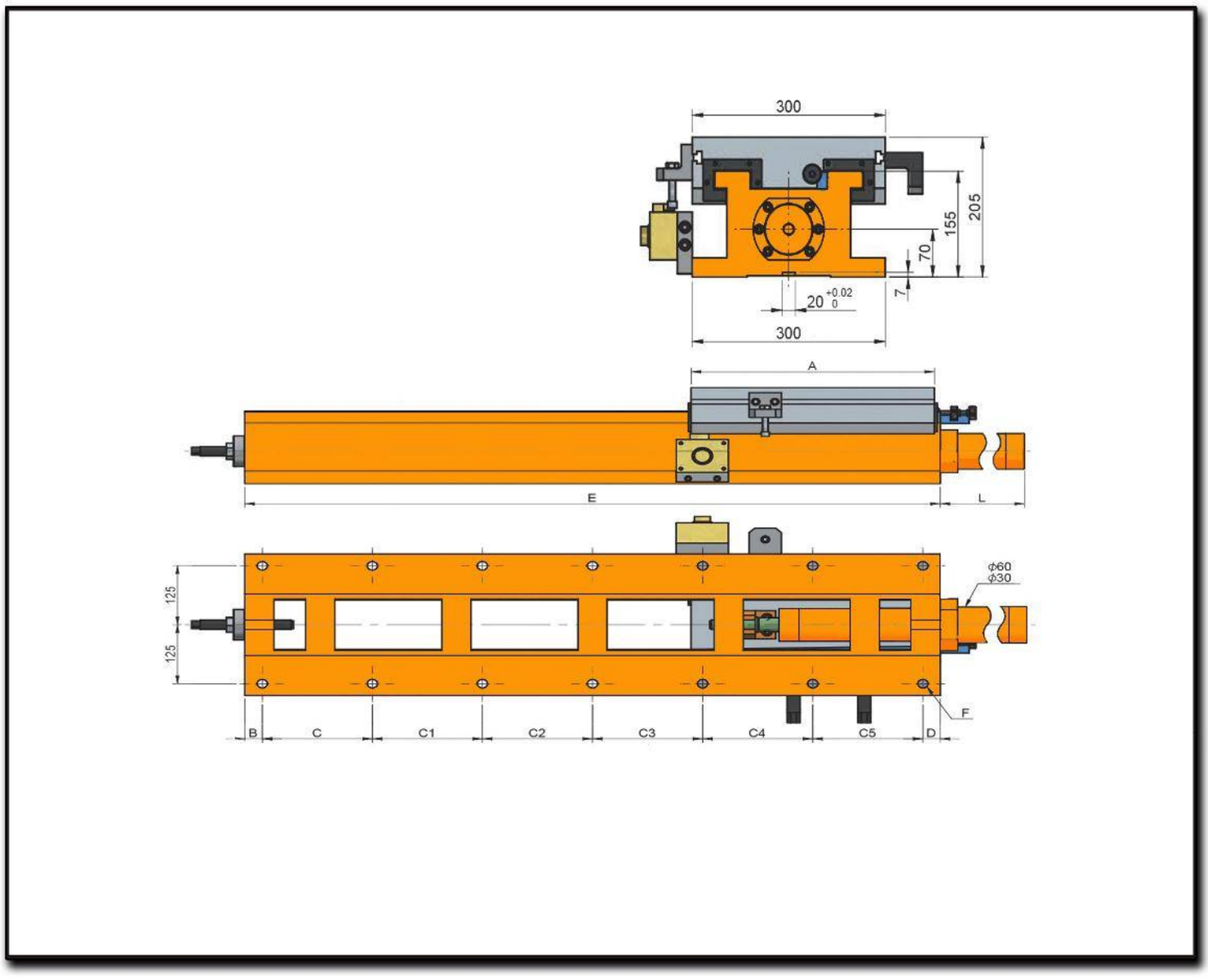
300
205
155
70
7
20 +0.02 0
300
A
E
L
ϕ60
ϕ30
125
125
F
B
C
C1
C2
C3
C4
C5
D

HS300-420/800H

Hi Performance Hydraulic Slide

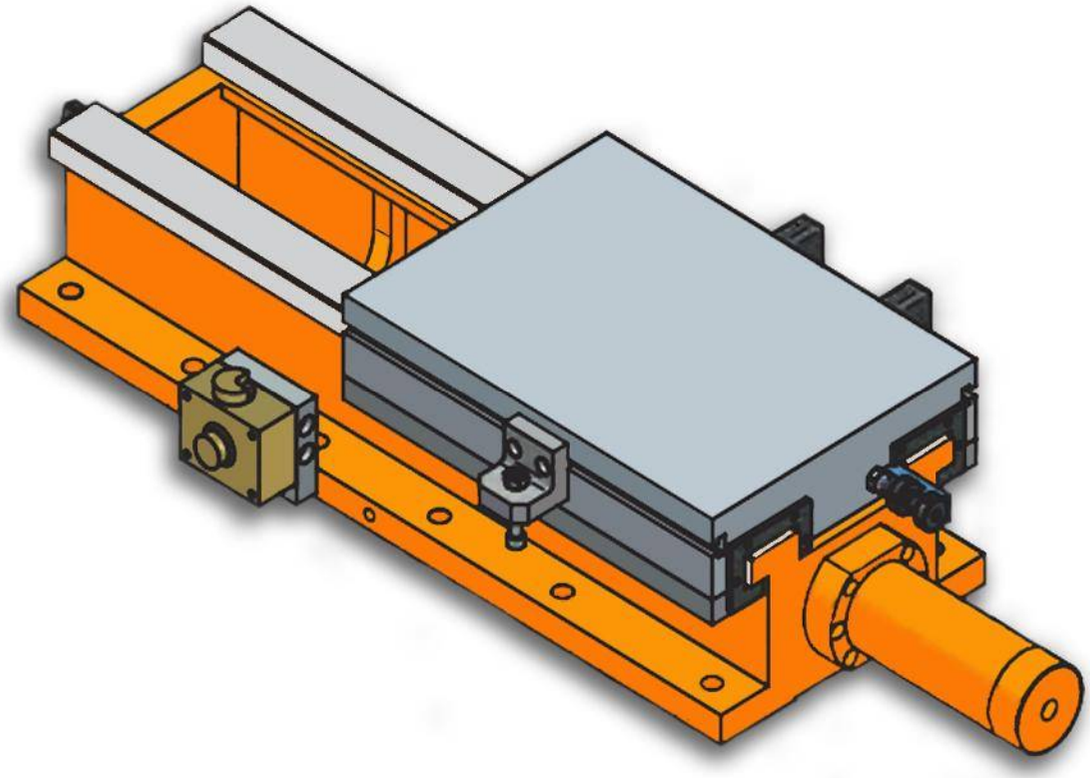

Characteristics & Dimensions

MODEL	HS300-420/800H
Profile Width	*300.00*
A	*420.00*
B	*35.00*
C	*140.00*
C1	*140.00*
C2	*140.00*
C3	*140.00*
C4	*170.00*
C5	*-*
D	*35.00*
E ***(Profile Length)***	*800.00*
F ***(Lead Screw Pace)***	*12 - Ø18*
L ***(Piston Length)***	*224.00*
Maximum Stroke	*360.00*
Device Total Weight ***(kg)***	*195.00*

***** All dimensions are given in millimeters.*

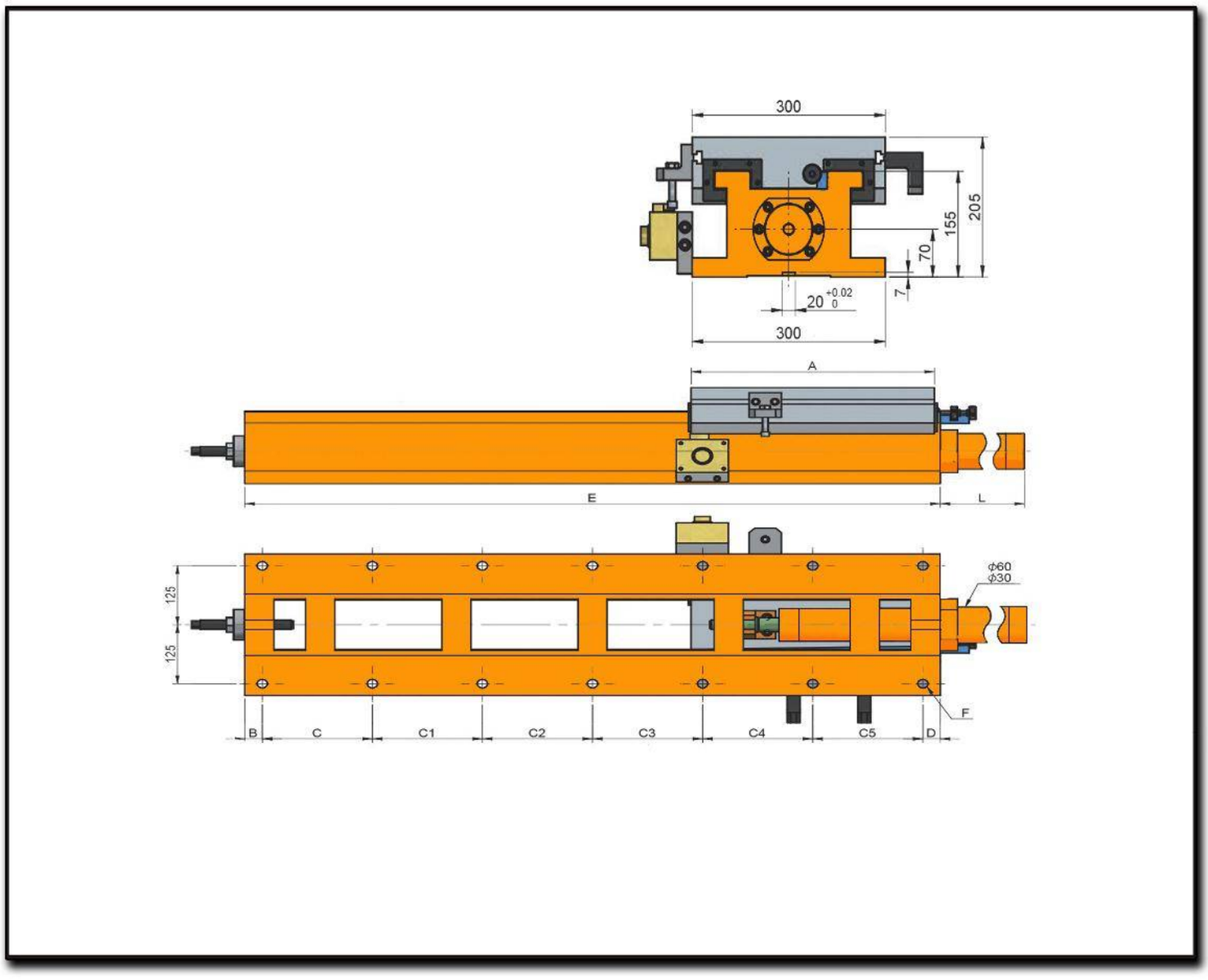
300
205
155
70
7
20 +0.02 0
300
A
E
L
125
125
ϕ60
ϕ30
F
B
C
C1
C2
C3
C4
C5
D

HS300-420/940H

Hi Performance Hydraulic Slide

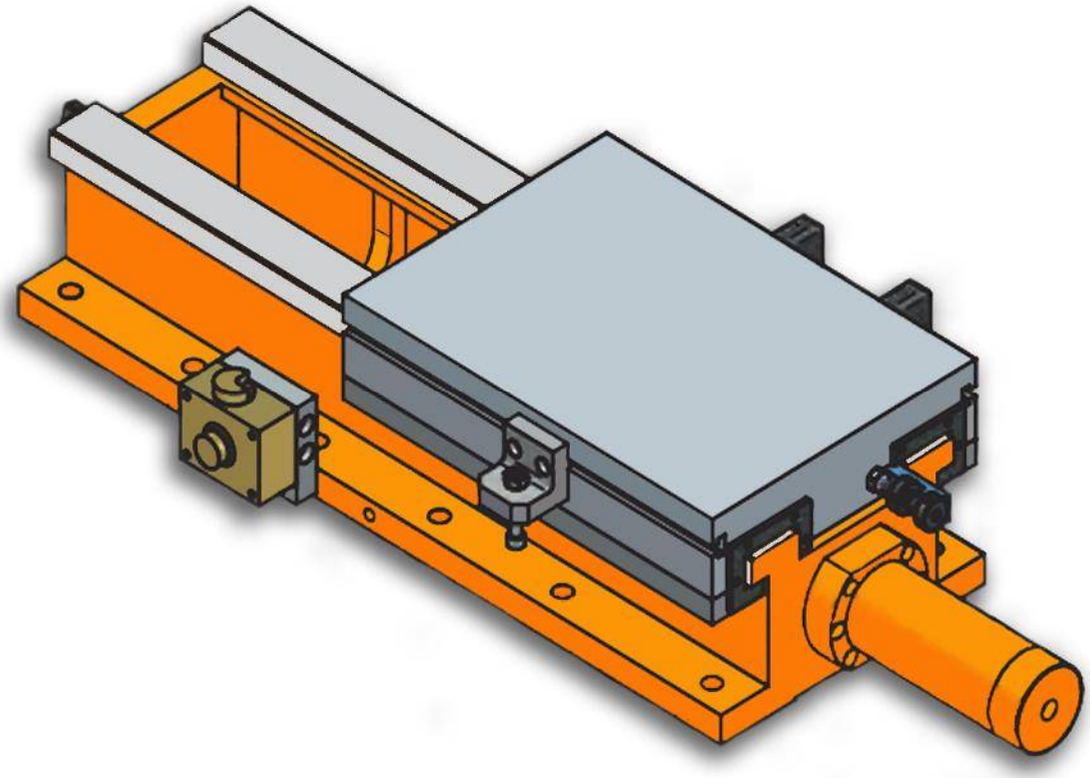

Características & Dimensiones

Modelo	HS300-420/940H
Ancho Del Perfil	*300.00*
A	*420.00*
B	*35.00*
C	*175.00*
C1	*175.00*
C2	*175.00*
C3	*175.00*
C4	*175.00*
C5	*-*
D	*30.00*
E	*940.00*
Longitud Del Pistón	*368.00*
Longitud Total Del Dispositivo	*1,308.00*
Paso Del Tornillo Patrón	*12 - Ø18*
Carrera Máxima De La Corredera	*500.00*
Peso Total Del Dispositivo ***(Kg)***	*210.00*

**** Redondez ≤ 0.003.*

***** Todas las dimensiones estaban dadas en milímetros.*

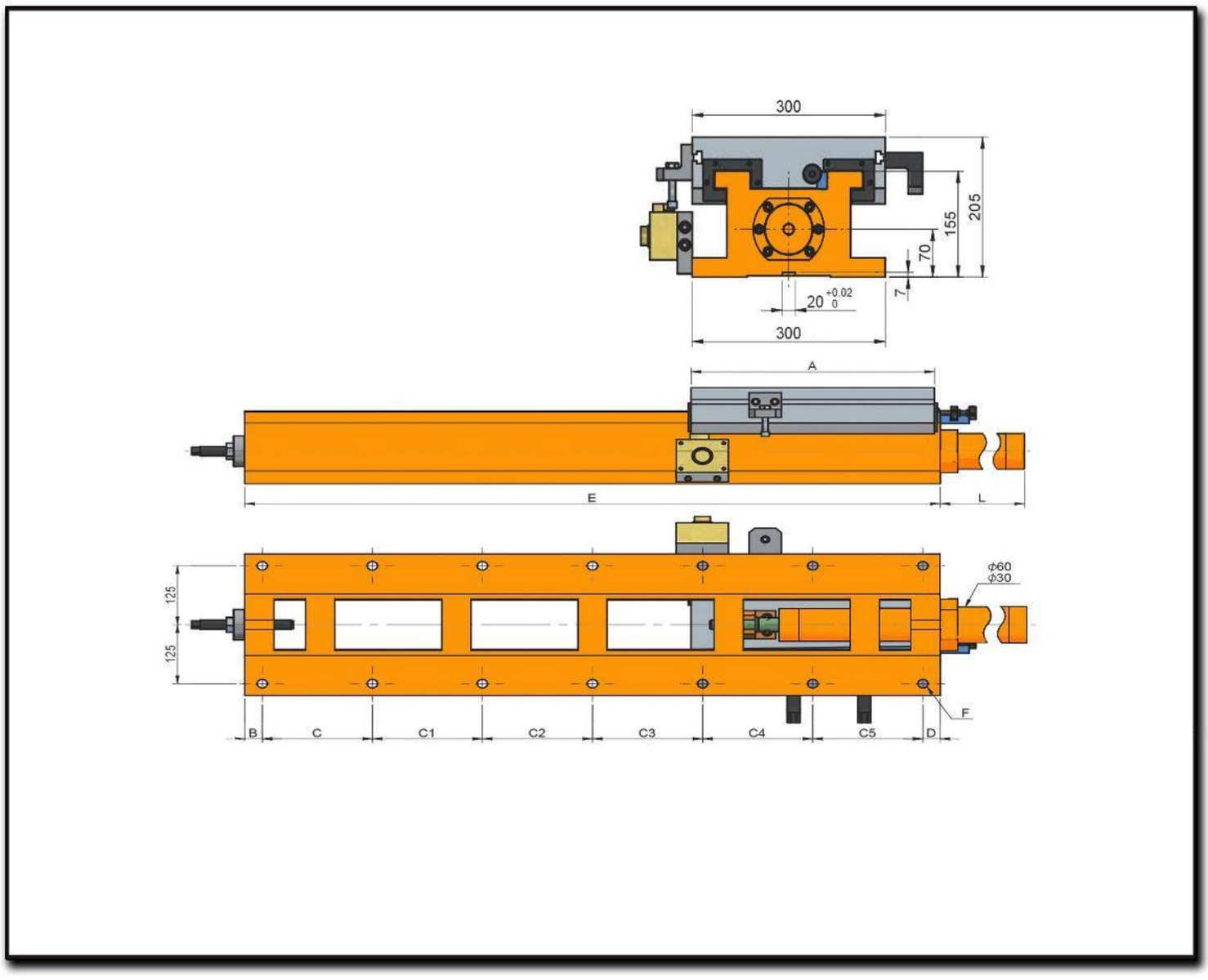
300
205
155
70
7
20 +0.02 0
300
A
E
L
ϕ60
ϕ30
125
125
F
B
C
C1
C2
C3
C4
C5
D

HS300-420/1200H

Hi Performance Hydraulic Slide

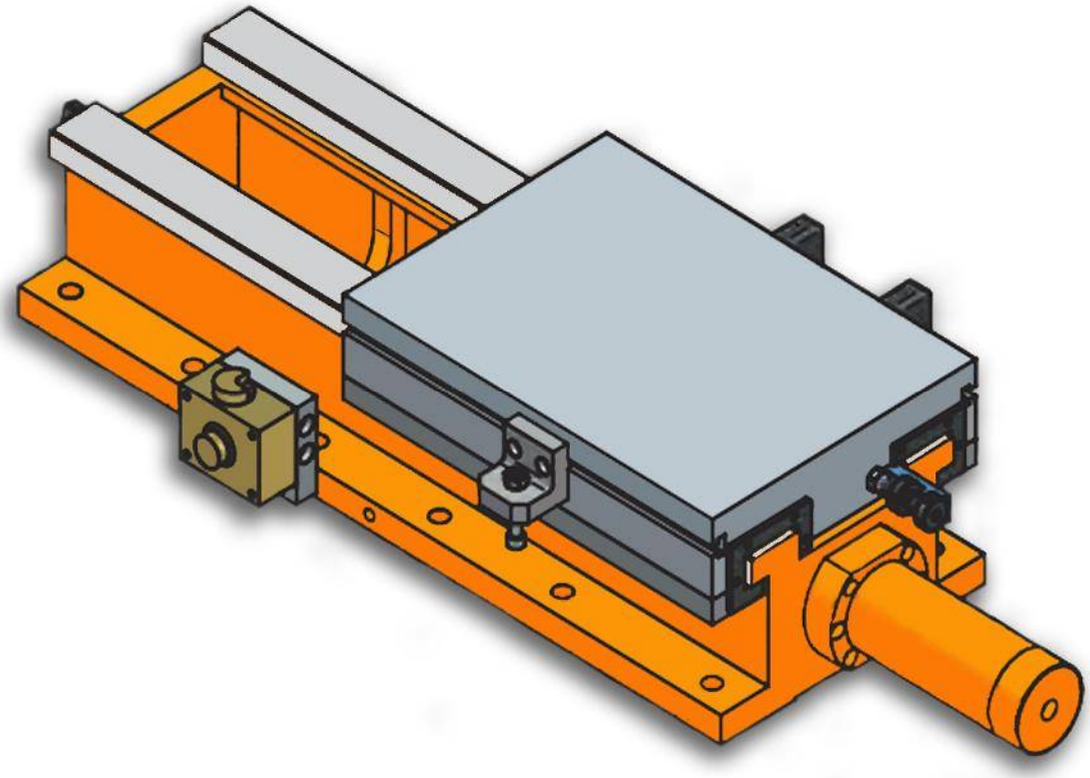

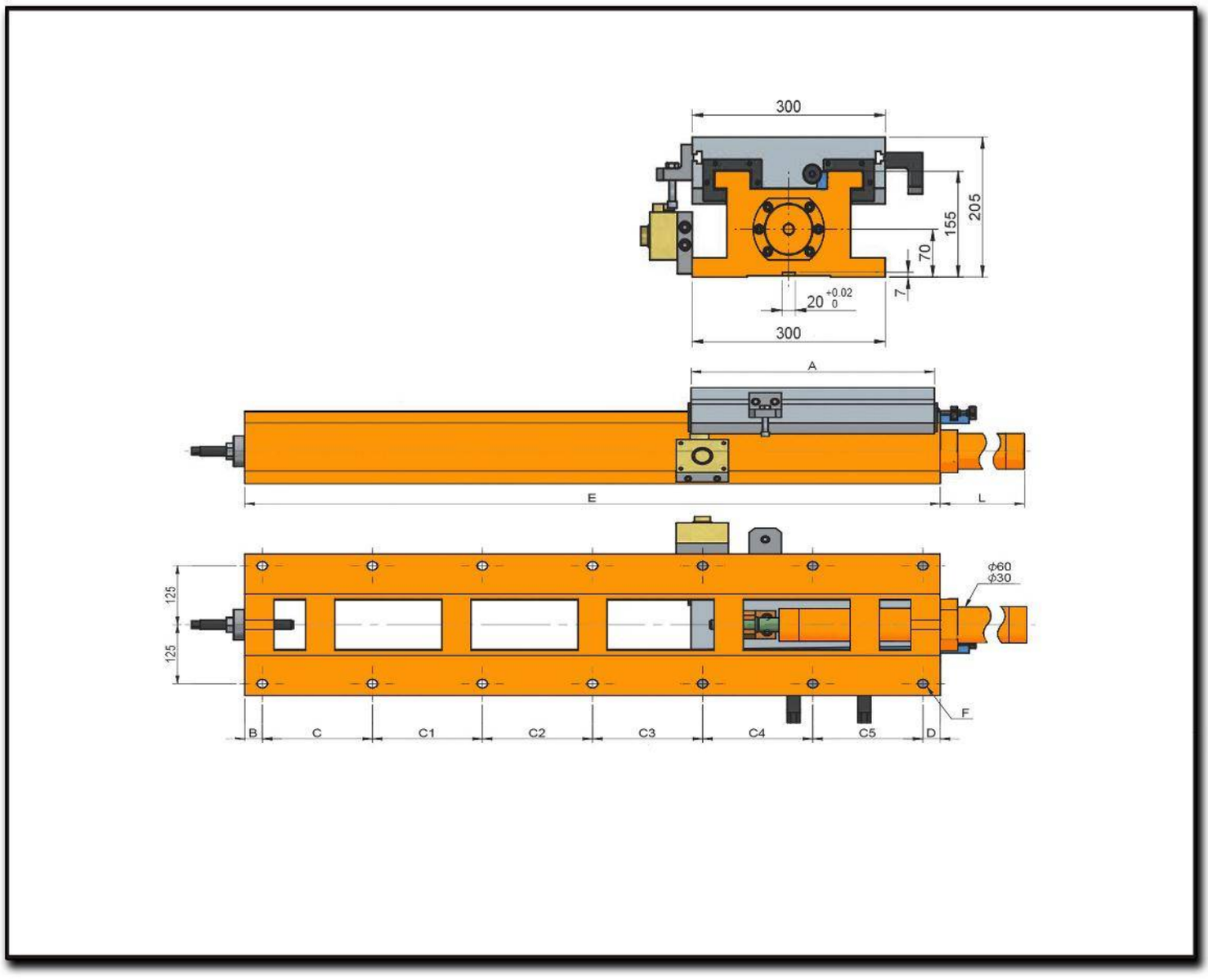
300
205
155
70
7
20 +0.02 0
300
A
E
L
ϕ60
ϕ30
125
125
F
B
C
C1
C2
C3
C4
C5
D

Characteristics & Dimensions

MODEL	HS300-420/1200H
Profile Width	*300.00*
A	*420.00*
B	*30.00*
C	*190.00*
C1	*190.00*
C2	*190.00*
C3	*190.00*
C4	*190.00*
C5	*190.00*
D	*30.00*
E ***(Profile Length)***	*1200.00*
F ***(Lead Screw Pace)***	*14 - Ø18*
L ***(Piston Length)***	*628.00*
Maximum Stroke	*700.00*
Device Total Weight ***(kg)***	*246.00*

***** All dimensions are given in millimeters.*

NXT SERIES

CNC INDEXING TABLES WITH HYDRAULIC COUPLING

NXT-250H

Hydraulic CNC Coupling Indexing Tables



Characteristics & Dimensions

MODEL		NXT-250H	
Turning Table Diameter (mm)		Ø 250.00	
Central Passing Hole Diameter (mm)		Ø55 H7	
Table Height (mm)		200.00	
"T" Holes Width (mm)		12.00	
Guide Block Width (mm)		18.00	
Hydraulic Gripping Device (Kg/cm^2)		35.00	
Minimum Indexing Angle		5°	1°
Table Divisions		72.00	360.00
Indexing Precision (Accumulative) | (arc/sec)		4"	
Repeatability (arc sec)		1±"	
Maximum Rotating Speed (r.p.m.)	TABLE	16.60	
	SERVO MOTOR	2,000.00	
Servo Motor Type (Optional)	FANUC	8a1	
	MITSUBISHI	HF-104/154	
	SIEMENS	1FK7063	

*** Roundness ≤ 0.003.
**** All dimensions are given in millimeters.

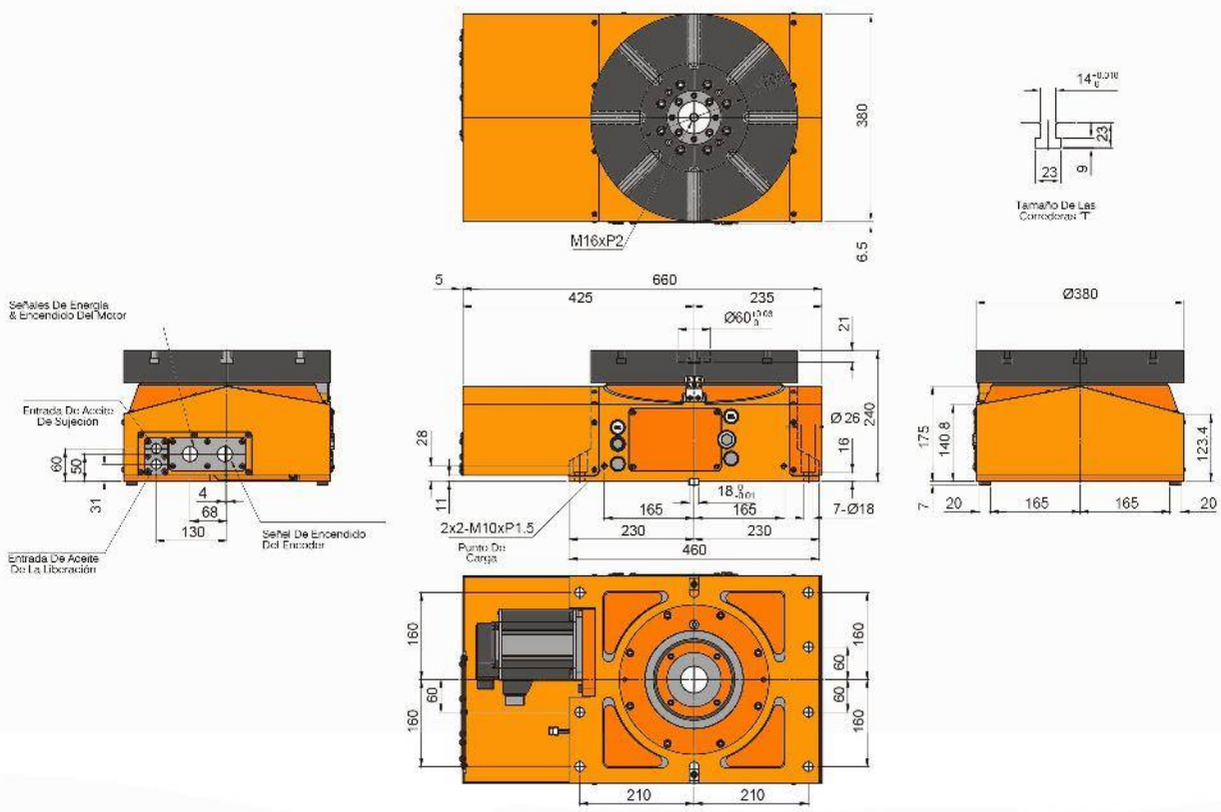

M16xP2
380
6.5
Tamaño De Las Corredoras "T"
Señales De Energía & Encendido Del Motor
Entrada De Aceite De Sujecion
Entrada De Aceite De La Liberación
Señal De Encendido Del Encoder
2x2-M10xP1.5
Punto De Carga
660
425
235
Ø380
Ø 26
240
7-Ø18
165
230
460
210

Characteristics & Dimensions

MODEL		NXT-250H
Gear Ratio		*1/120*
Rotation Torque *(Kg-m)*		*48.00*
Gripping Torque *(Kg)*	F 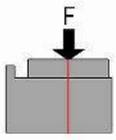	*1,500.00*
Gripping Torque *(Kg-m)*	F x R 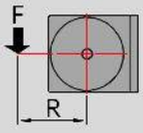	*300.00*
Loading Capacity At 0° *(Kg)*	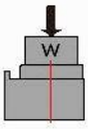	*300.00*
Tota Weight *(Kg)*		*198.00*

**** Roundness ≤ 0.003.
***** All dimensions are given in millimeters.

NXT-380H

Horizontal Hydraulic CNC Coupling Indexing Tables



Characteristics & Dimensions

MODEL		NXT-380H	
Turning Table Diameter (mm)		Ø 380.00	
Central Passing Hole Diameter (mm)		Ø60 H7	
Table Height (mm)		240.00	
"T" Holes Width (mm)		14 H7	
Guide Block Width (mm)		14 H7	
Hydraulic Gripping Device (Kg/cm^2)		35.00	
Minimum Indexing Angle		5°	1°
Table Divisions		72.00	360.00
Indexing Precision (Accumulative) | (arc/sec)		4"	
Repeatability (arc sec)		1±"	
Maximum Rotating Speed (r.p.m.)	TABLE	16.60	
	SERVO MOTOR	2,000.00	
Servo Motor Type (Optional)	FANUC	8a1	
	MITSUBISHI	HF-154	
	SIEMENS	1FK7063	

*** Roundness ≤ 0.003.
**** All dimensions are given in millimeters.

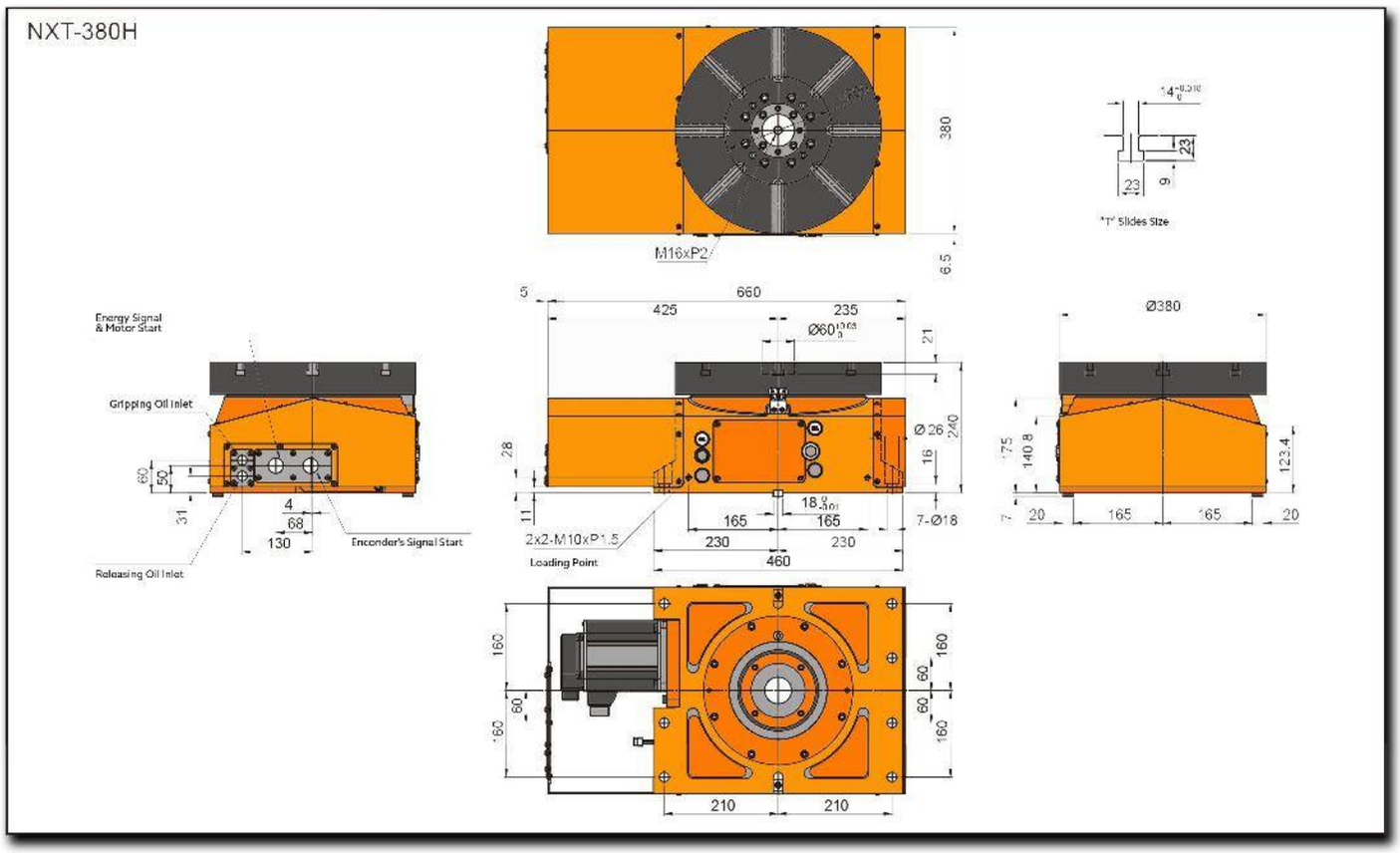
NXT-380H
M16xP2
380
6.5
"T" Slides Size
Energy Signal & Motor Start
Gripping Oil Inlet
Releasing Oil Inlet
Encoder's Signal Start
2x2-M10xP1.5
Loading Point
660
425
235
Ø380
Ø26
7-Ø18
165
230
460
210
160
60

Characteristics & Dimensions

MODEL		NXT-380H
Gear Ratio		*1/120*
Rotation Torque *(Kg-m)*		*48.00*
Gripping Torque *(Kg)*	F 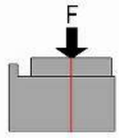	*2,000.00*
Gripping Torque *(Kg-m)*	F x R 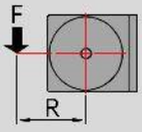	*400.00*
Loading Capacity At 0° *(Kg)*	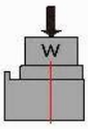	*350.00*
Tota Weight *(Kg)*		*210.00*

***** Roundness ≤ 0.003.
****** All dimensions are given in millimeters.

NXT-500H

Horizontal Hydraulic CNC Coupling Indexing Tables



Characteristics & Dimensions

MODEL		NXT-500H
Gear Ratio		*1/120*
Rotation Torque *(Kg-m)*		*200.00*
Gripping Torque *(Kg)*	F 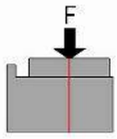	*2,500.00*
Gripping Torque *(Kg-m)*	F x R 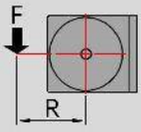	*500.00*
Loading Capacity At 0° *(Kg)*	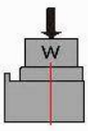	*1,200.00*
Total Weight *(Kg)*		*300.00*

***** Roundness ≤ 0.003.
****** All dimensions are given in millimeters.

Characteristics & Dimensions

MODEL		NXT-500H	
Turning Size (L x W)		500.00 x 500.00	
Central Passing Hole Diameter (mm)		Ø50 H7	
Table Height (mm)		280.00	
"T" Holes Width (mm)		18 H7	
Guide Block Width (mm)		18 H7	
Hydraulic Gripping Device (Kg/cm^2)		35.00	
Minimum Indexing Angle		5°	1°
Table Divisions		72.00	360.00
Indexing Precision (Accumulative) | (arc/sec)		4"	
Repeatability (arc sec)		1±"	
Maximum Rotating Speed (r.p.m.)	TABLE	16.60	
	SERVO MOTOR	2,000.00	
Servo Motor Type (Optional)	FANUC	12ai	
	MITSUBISHI	HF-204	
	SIEMENS	1FK6083	

*** Roundness ≤ 0.003.
**** All dimensions are given in millimeters.

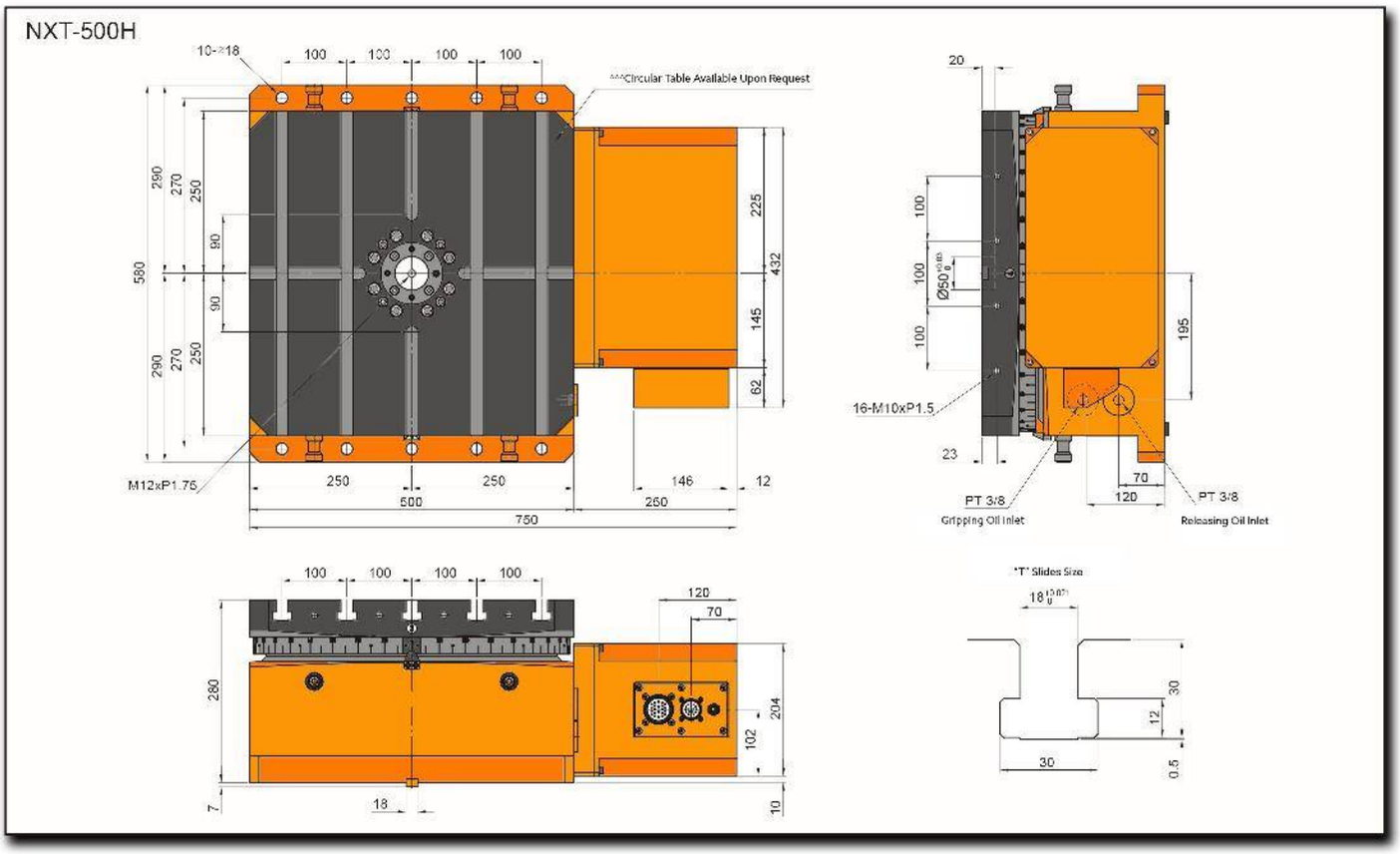
NXT-500H
10-Ø18
100
100
100
100
***Circular Table Available Upon Request
290
270
250
90
90
250
270
290
580
225
432
145
62
M12xP1.75
250
250
500
146
260
750
12
20
100
100
100
Ø50
195
16-M10xP1.5
23
70
120
PT 3/8
PT 3/8
Gripping Oil Inlet
Releasing Oil Inlet
100
100
100
100
120
70
280
204
102
7
18
10
T Slides Size
18
30
12
30
0.5

NXT-630H

Horizontal Hydraulic CNC Coupling Indexing Tables



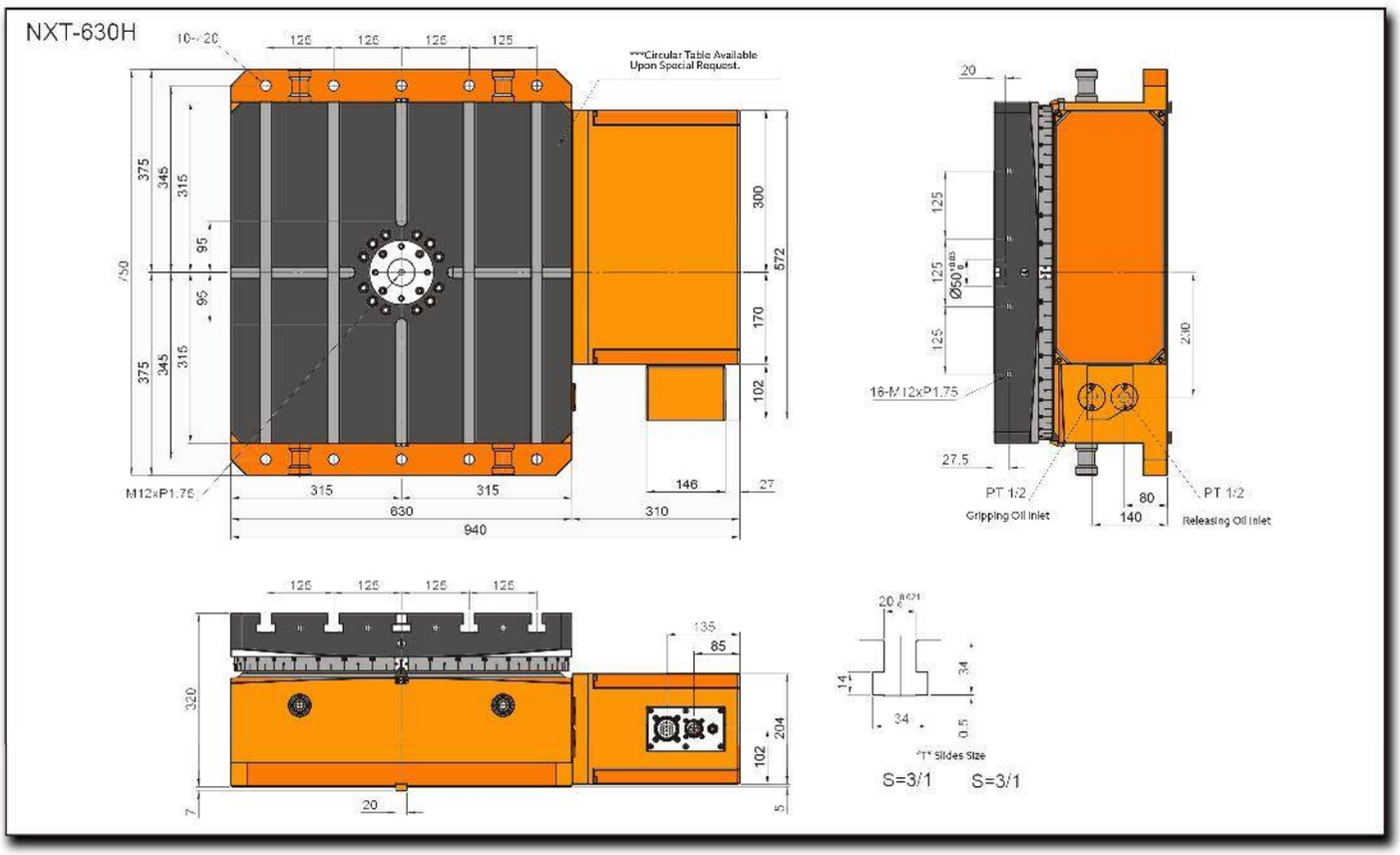
NXT-630H
10-/20
125
125
125
125
***Circular Table Available Upon Special Request.
375
345
315
95
95
750
375
345
315
300
572
170
102
M12xP1.75
315
315
630
940
146
27
310
20
125
125
125
Ø50
230
16-M12xP1.75
27.5
PT 1/2
Gripping Oil Inlet
80
140
PT 1/2
Releasing Oil Inlet
125
125
125
125
135
85
320
204
102
7
20
5
20
14
34
34
0.5
"T" Slides Size
S=3/1
S=3/1

Characteristics & Dimensions

MODEL		NXT-630H	
Turning Size (L x W)		630.00 x 630.00	
Central Passing Hole Diameter (mm)		Ø50 H7	
Table Height (mm)		320.00	
"T" Holes Width (mm)		20 H7	
Guide Block Width (mm)		20 H7	
Hydraulic Gripping Device (Kg/cm^2)		35.00	
Minimum Indexing Angle		5°	1°
Table Divisions		72.00	360.00
Indexing Precision (Accumulative) | (arc/sec)		4"	
Repeatability (arc sec)		1±"	
Maximum Rotating Speed (r.p.m.)	TABLE	11.10	
	SERVO MOTOR	2,000.00	
Servo Motor Type (Optional)	FANUC	12ai	
	MITSUBISHI	HF-204S	
	SIEMENS	1FK6083	

*** Roundness ≤ 0.003.
**** All dimensions are given in millimeters.

Characteristics & Dimensions

MODEL	NXT-630H
Gear Ratio	*1/180*
Rotation Torque *(Kg-m)*	*280.00*
Gripping Torque *(Kg)* 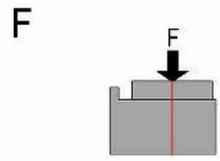	*4,000.00*
Gripping Torque *(Kg-m)* 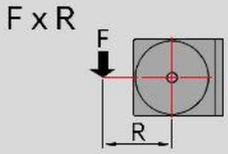	*600.00*
Loading Capacity At 0° *(Kg)* 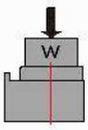	*2,500.00*
Tota Weight *(Kg)*	*550.00*

**** Roundness ≤ 0.003.*
***** All dimensions are given in millimeters.*

NXT-800H

Horizontal Hydraulic CNC Coupling Indexing Tables



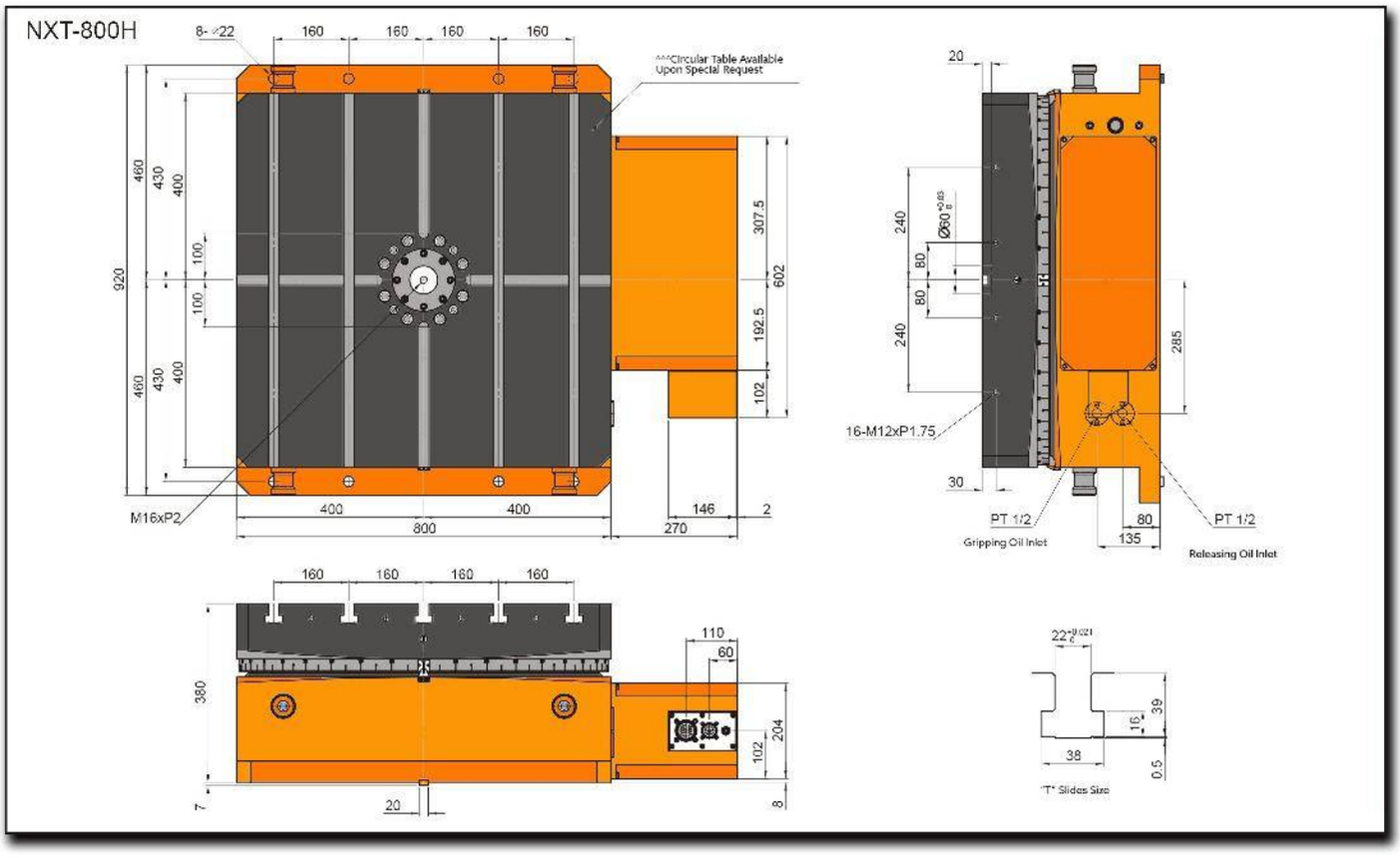
NXT-800H
8- ⌀22
160
160
160
160
***Circular Table Available Upon Special Request
460
430
400
100
100
920
460
430
400
307.5
602
192.5
102
M16xP2
400
400
800
146
270
2
20
240
Ø60 +0.03 0
60
80
240
285
16-M12xP1.75
30
PT 1/2
Gripping Oil Inlet
80
135
PT 1/2
Releasing Oil Inlet
160
160
160
160
110
60
380
204
102
7
20
8
22 +0.021 0
39
16
38
0.5
'T' Slides Size

Characteristics & Dimensions

MODEL		NXT-800H
Gear Ratio		*1/180*
Rotation Torque *(Kg-m)*		*430.00*
Gripping Torque *(Kg)*	F 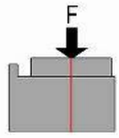	*6,000.00*
Gripping Torque *(Kg-m)*	F x R 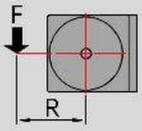	*800.00*
Loading Capacity At 0° *(Kg)*	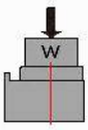	*4,000.00*
Total Weight *(Kg)*		*1,000.00*

**** Roundness ≤ 0.003.*
***** All dimensions are given in millimeters.*

Characteristics & Dimensions

MODEL		NXT-800H	
Turning Size (L x W)		800.00 x 800.00	
Central Passing Hole Diameter (mm)		Ø60 H7	
Table Height (mm)		380.00	
"T" Holes Width (mm)		22 H7	
Guide Block Width (mm)		22 H7	
Hydraulic Gripping Device (Kg/cm^2)		35.00	
Minimum Indexing Angle		5°	1°
Table Divisions		72.00	360.00
Indexing Precision (Accumulative) | (arc/sec)		4"	
Repeatability (arc sec)		1±"	
Maximum Rotating Speed (r.p.m.)	TABLE	11.10	
	SERVO MOTOR	2,000.00	
Servo Motor Type (Optional)	FANUC	22ai	
	MITSUBISHI	HF-354S	
	SIEMENS	1FK6101	

*** Roundness ≤ 0.003.
**** All dimensions are given in millimeters.

NXT-1000H

Horizontal Hydraulic CNC Coupling Indexing Tables



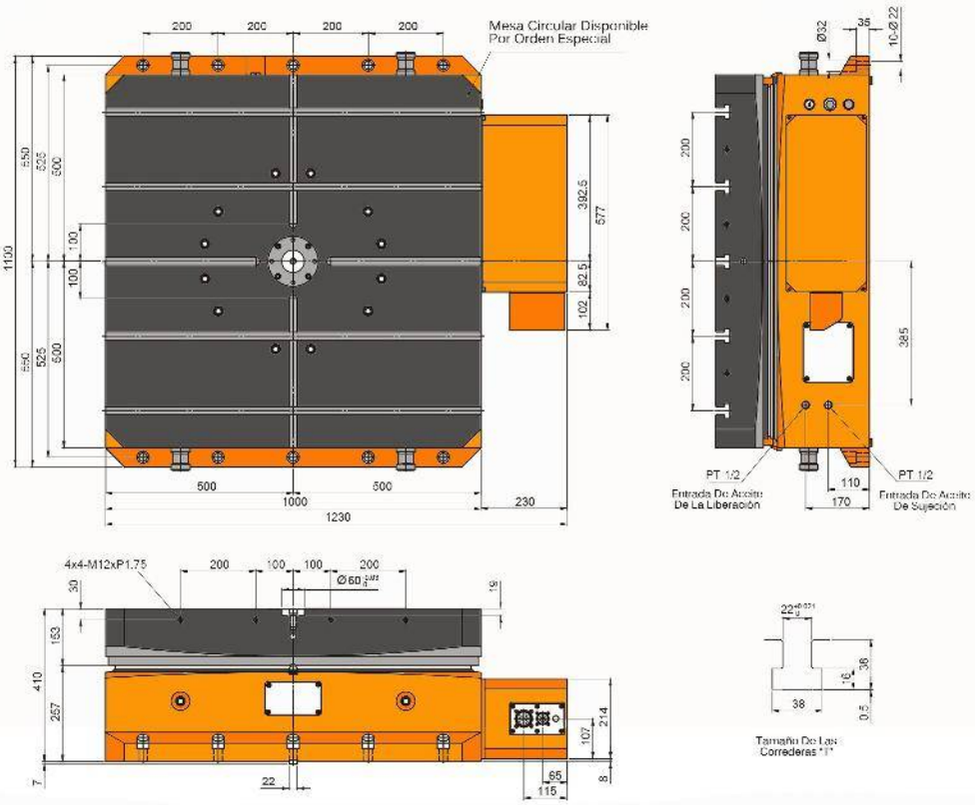
Mesa Circular Disponible
Por Orden Especial
PT 1/2
Entrada De Aceite
De La Liberación
PT 1/2
Entrada De Aceite
De Sujeción
4x4-M12xP1.75
Tamaño De Las
Correderas "T"

Characteristics & Dimensions

MODEL		NXT-1000H	
Turning Size (L x W)		1000.00 x 1000.00	
Central Passing Hole Diameter (mm)		Ø60 H7	
Table Height (mm)		410.00	
"T" Holes Width (mm)		22 H7	
Guide Block Width (mm)		22 H7	
Hydraulic Gripping Device (Kg/cm^2)		35.00	
Minimum Indexing Angle		5°	1°
Table Divisions		72.00	360.00
Indexing Precision (Accumulative) | (arc/sec)		4"	
Repeatability (arc sec)		1±"	
Maximum Rotating Speed (r.p.m.)	TABLE	8.33	
	SERVO MOTOR	2,000.00	
Servo Motor Type (Optional)	FANUC	22ai	
	MITSUBISHI	HF-354S	
	SIEMENS	1FK6101	

*** Roundness ≤ 0.003.
**** All dimensions are given in millimeters.

Characteristics & Dimensions

MODEL		NXT-1000H
Gear Ratio		*1/240*
Rotation Torque *(Kg-m)*		*450.00*
Gripping Torque *(Kg)*	F 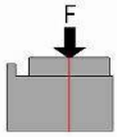	*8,000.00*
Gripping Torque *(Kg-m)*	F x R 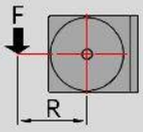	*12000.00*
Loading Capacity At 0° *(Kg)*	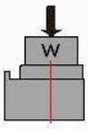	*8,000.00*
Total Weight *(Kg)*		*1,970.00*

**** Roundness ≤ 0.003.*
***** All dimensions are given in millimeters.*

NXT-250R

Hydraulic CNC Coupling Indexing Tables



Characteristics & Dimensions

MODEL		NXT-250R	
Table Diameter		Ø 250.00	
Central Passing Hole Diameter		Ø55 H7	
Central Hole		Ø 30.00	
Center Height (Vertically)		170.00	
Total Height (Horizontally)		200.00	
"T" Holes Width		12 H7	
Guide Block Thickness		18 H7	
Hydraulic Gripping Device *(Kg/cm²)*		35.00	
Minimum Indexing Angle		5°	1°
Table Divisions		72.00	360.00
Indexing Precision (Accumulative) | (arc/sec)		4"	
Repeatability (arc sec)		1±"	
Maximum Rotating Speed **(r.p.m.)**	*TABLE*	16.60	
	SERVO MOTOR	2,000.00	
Servo Motor Type **(Optional)**	FANUC	8ai	
	MITSUBISHI	HF-104 / 154	
	SIEMENS	1FK7063	
	SIEMENS	QSY116E	

*** Roundness ≤ 0.003.
**** All dimensions are given in millimeters.

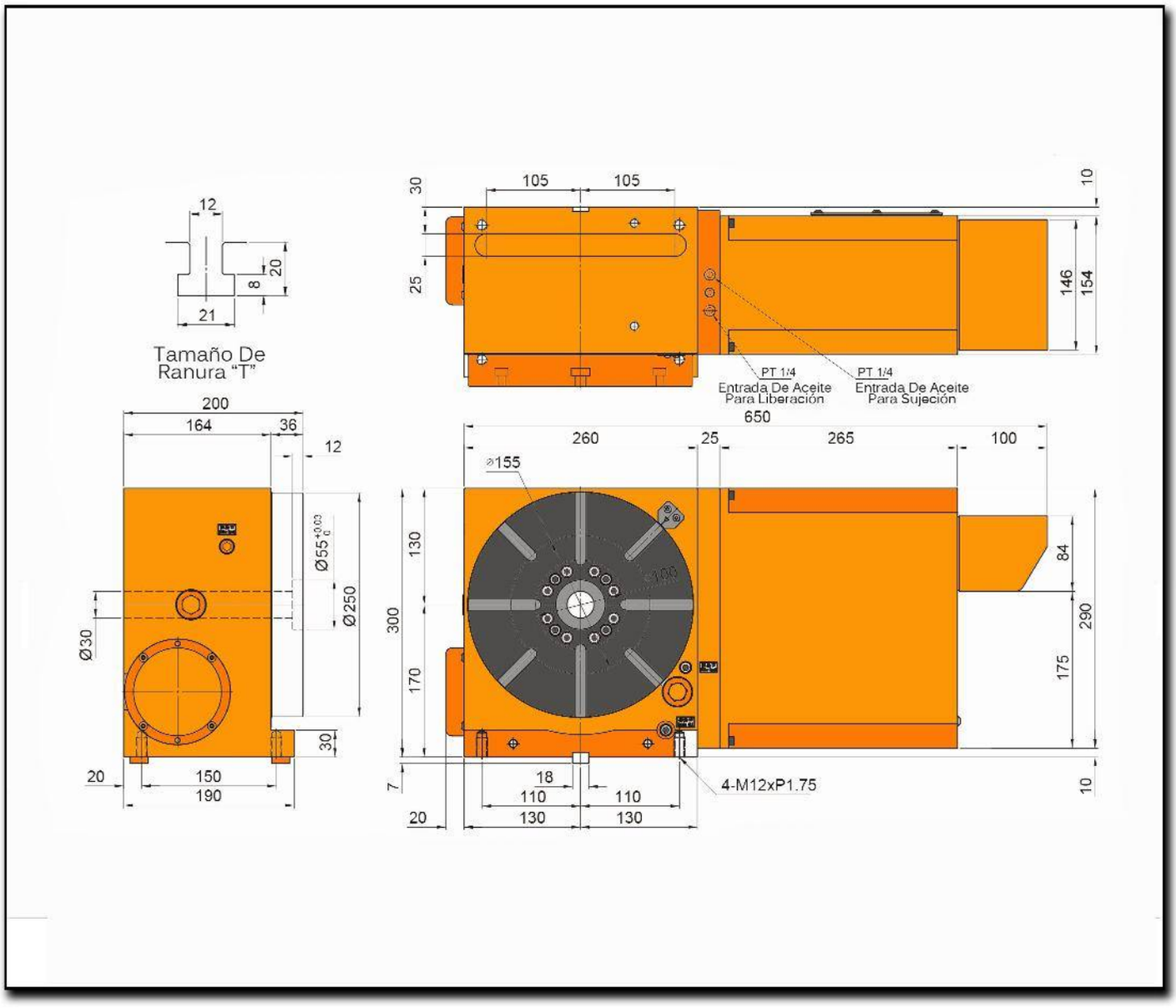
12
20
8
21
Tamaño De
Ranura "T"
200
164
36
12
Ø55 +0.03 0
Ø250
Ø30
30
20
150
190
30
105
105
10
25
146
154
PT 1/4
Entrada De Aceite
Para Liberación
PT 1/4
Entrada De Aceite
Para Sujeción
650
260
25
265
100
⌀155
130
300
170
84
290
175
7
18
110
110
20
130
130
4-M12xP1.75
10

Characteristics & Dimensions

MODEL		NXT-250R
Gear Ratio		*1 / 120*
Rotation Torque *(Kg-m)*		*48.00*
Gripping Torque *(Kg)*	F 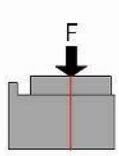	*1,500.00*
Gripping Torque *(Kg-m)*	F x R 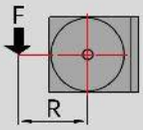	*300.00*
Gripping Torque *(Kg-m)*	F×L 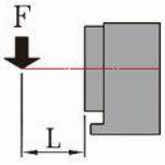	*350.00*
Loading Capacity At 0° *(Kg)*	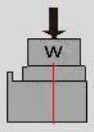	*300.00*
	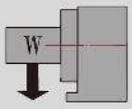	*125.00*
Total Weight *(Kg)*		*94.00*

*** Roundness ≤ 0.003.
**** All dimensions are given in millimeters.

NXT-320RV

Hydraulic CNC Coupling Indexing Tables



Characteristics & Dimensions

MODEL		NXT-320RV	
Table Diameter		Ø 320.00	
Central Passing Hole Diameter		Ø100 H7	
Central Hole		Ø 80.00	
Center Height (Vertically)		230.00	
Total Height (Horizontally)		240.00	
"T" Holes Width		14 H7	
Guide Block Thickness		18 H7	
Hydraulic Gripping Device *(Kg/cm²)*		35.00	
Minimum Indexing Angle		5°	1°
Table Divisions		72.00	360.00
Indexing Precision (Accumulative) | (arc/sec)		4"	
Repeatability (arc sec)		1±"	
Maximum Rotating Speed **(r.p.m.)**	*TABLE*	27.70	
	SERVO MOTOR	2,000.00	
Servo Motor Type **(Optional)**	*FANUC*	12ai	
	MITSUBISHI	HF-204T	
	SIEMENS	1FK7083	
	SIEMENS	QSY155B	

*** Roundness ≤ 0.003.
**** All dimensions are given in millimeters.

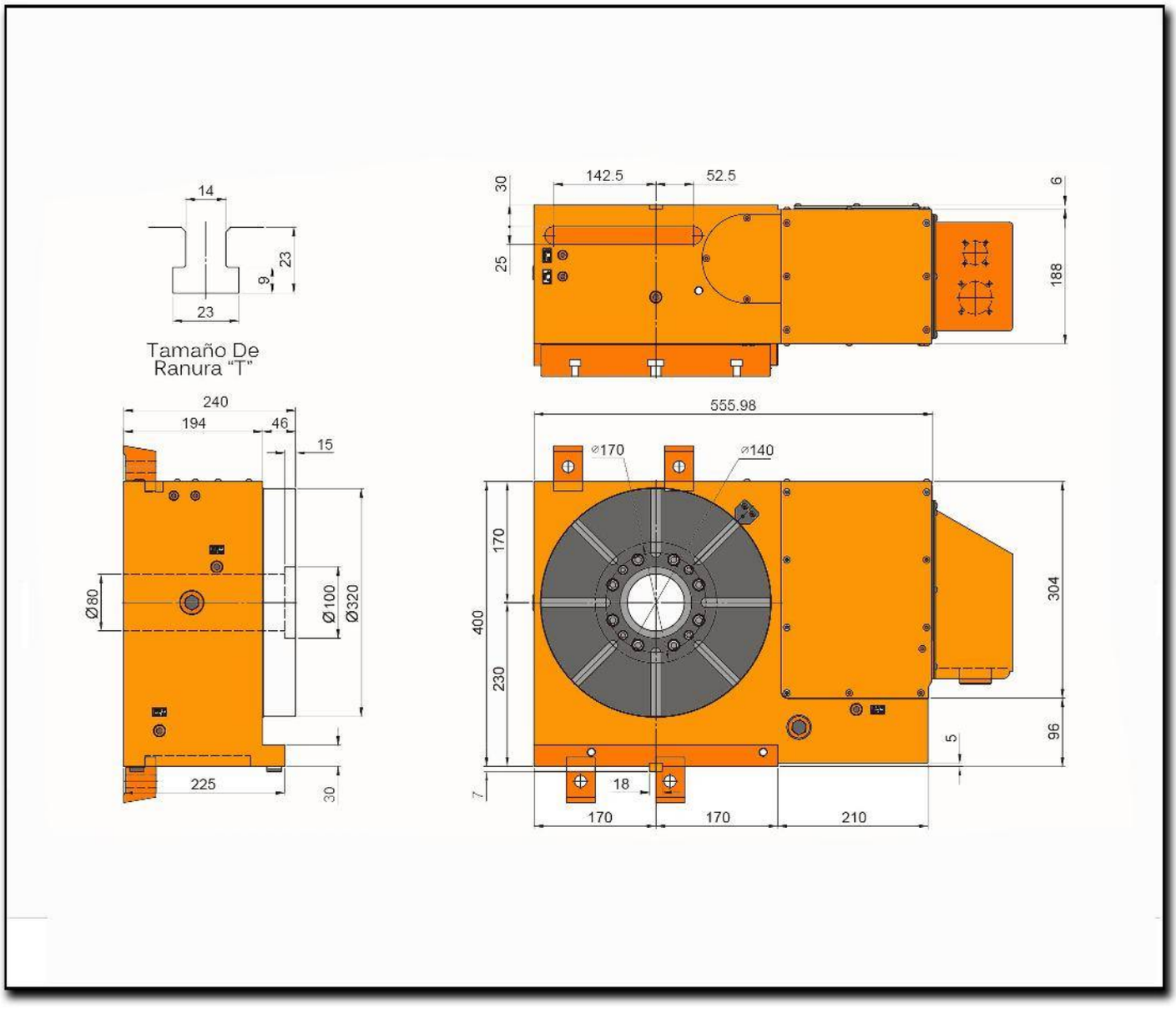
14
23
9
23
Tamaño De
Ranura "T"
142.5
52.5
30
25
6
188
240
194
46
15
Ø80
Ø100
Ø320
225
30
555.98
⌀170
⌀140
170
400
230
304
96
5
18
7
170
170
210

Characteristics & Dimensions

MODEL		NXT-320RV
Gear Ratio		*1 / 72*
Rotation Torque *(Kg-m)*		*78.00*
Gripping Torque *(Kg)*	F 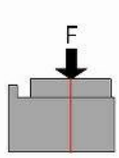	*2,000.00*
Gripping Torque *(Kg-m)*	F x R 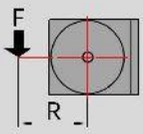	*400.00*
Gripping Torque *(Kg-m)*	F×L 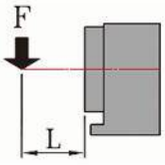	*450.00*
Loading Capacity At 0° *(Kg)*	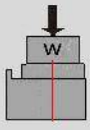	*350.00*
	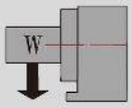	*175.00*
Total Weight *(Kg)*		*178.00*

**** Roundness ≤ 0.003.*
***** All dimensions are given in millimeters.*

NXT-400RV

Horizontal Hydraulic CNC Coupling Indexing Tables



Characteristics & Dimensions

MODEL		NXT-400RV	
Table Diameter		Ø 400.00	
Central Passing Hole Diameter		Ø120 H7	
Central Hole		Ø 80.00	
Center Height (Vertically)		250.00	
Total Height (Horizontally)		265.00	
"T" Holes Width		14 H7	
Guide Block Thickness		18 H7	
Hydraulic Gripping Device (Kg/cm²)		35.00	
Minimum Indexing Angle		5°	1°
Table Divisions		72.00	360.00
Indexing Precision (Accumulative) | (arc/sec)		4"	
Repeatability (arc sec)		1±"	
Maximum Rotating Speed (r.p.m.)	TABLE	11.10	
	SERVO MOTOR	2,000.00	
Servo Motor Type (Optional)	FANUC	12ai	
	MITSUBISHI	HF-204T	
	SIEMENS	1FK7083	
	SIEMENS	QSY155B	

*** Roundness ≤ 0.003.
**** All dimensions are given in millimeters.

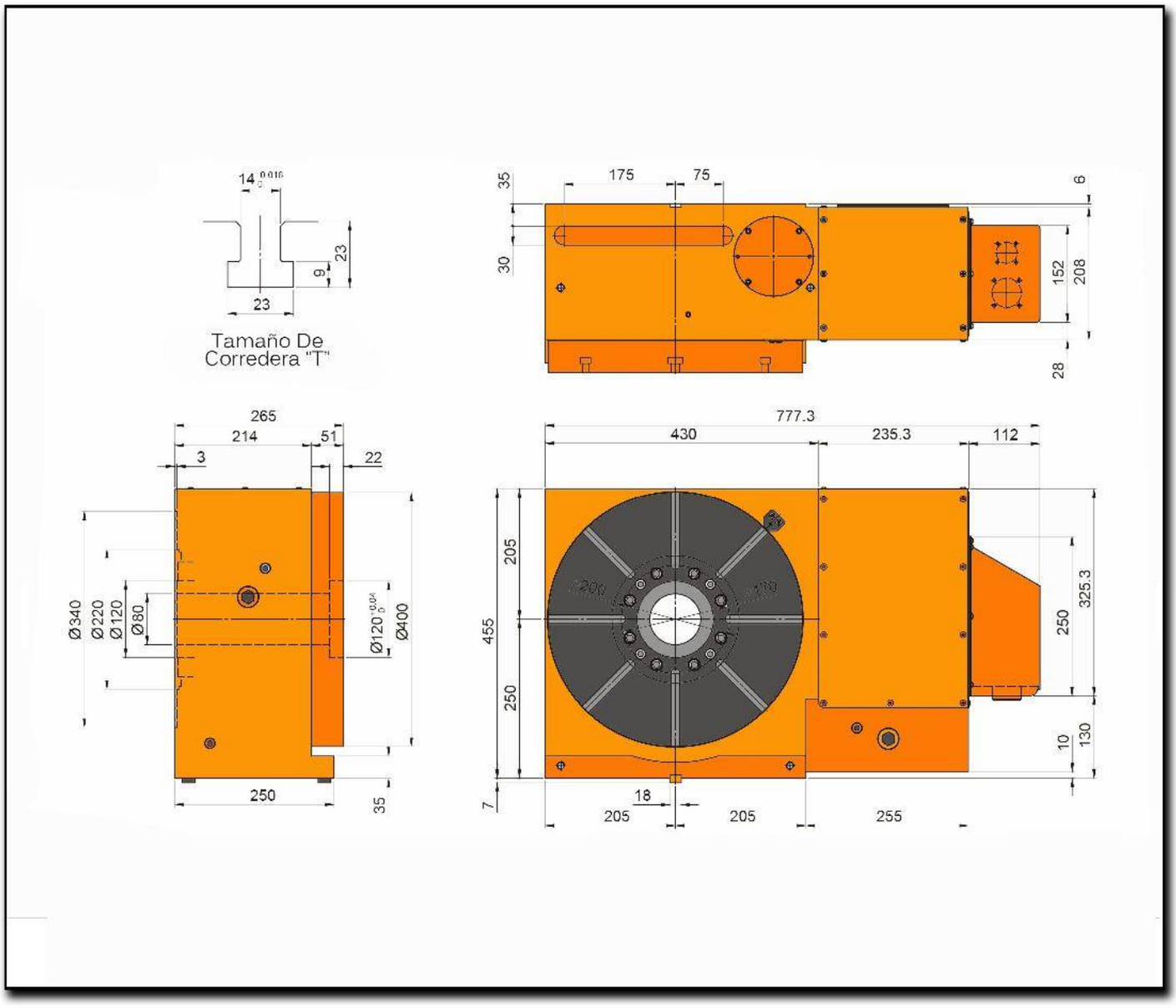
14
23
9
23
Tamaño De
Corredera "T"
35
175
75
6
30
152
208
28
265
214
51
22
3
Ø340
Ø220
Ø120
Ø80
Ø400
250
35
777.3
430
235.3
112
205
455
250
325.3
250
10
130
7
18
205
205
255

Characteristics & Dimensions

MODEL		NXT-400RV
Gear Ratio		*1 / 120*
Rotation Torque *(Kg-m)*		*170.00*
Gripping Torque *(Kg)*	F 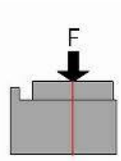	*2,500.00*
Gripping Torque *(Kg-m)*	F x R 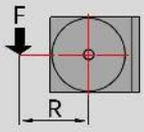	*500.00*
Gripping Torque *(Kg-m)*	F×L 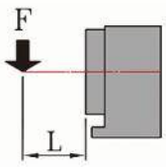	*550.00*
Loading Capacity At 0° *(Kg)*	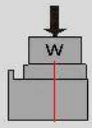	*500.00*
	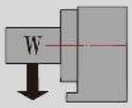	*250.00*
Tota Weight *(Kg)*		*300.00*

*** Roundness ≤ 0.003.
**** All dimensions are given in millimeters.

NXT-500RV

Hydraulic CNC Coupling Indexing Tables



Characteristics & Dimensions

MODEL		NXT-500RV	
Table Diameter		Ø 500.00	
Central Passing Hole Diameter		Ø120 H7	
Central Hole		Ø 90.00	
Center Height (Vertically)		310.00	
Total Height (Horizontally)		300.00	
"T" Holes Width		18 H7	
Guide Block Thickness		18 H7	
Hydraulic Gripping Device *(Kg/cm²)*		35.00	
Minimum Indexing Angle		5°	1°
Table Divisions		72.00	360.00
Indexing Precision (Accumulative) | (arc/sec)		4"	
Repeatability (arc sec)		1±"	
Maximum Rotating Speed **(r.p.m.)**	*TABLE*	11.10	
	SERVO MOTOR	2,000.00	
Servo Motor Type **(Optional)**	FANUC	12ai	
	MITSUBISHI	HF-204T	
	SIEMENS	1FK7083	
	SIEMENS	QSY155B	

*** Roundness ≤ 0.003.
**** All dimensions are given in millimeters.

Characteristics & Dimensions

MODEL		NXT-500RV
Gear Ratio		*1 / 180*
Rotation Torque *(Kg-m)*		*240.00*
Gripping Torque *(Kg)*	F 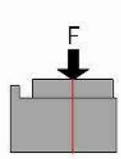	*3,000.00*
Gripping Torque *(Kg-m)*	F x R 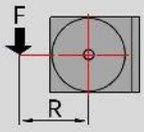	*600.00*
Gripping Torque *(Kg-m)*	F×L 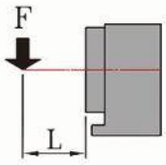	*650.00*
Loading Capacity At 0° *(Kg)*	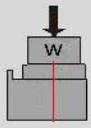	*600.00*
	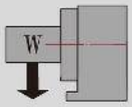	*300.00*
Tota Weight *(Kg)*		*420.00*

**** Roundness ≤ 0.003.*
***** All dimensions are given in millimeters.*

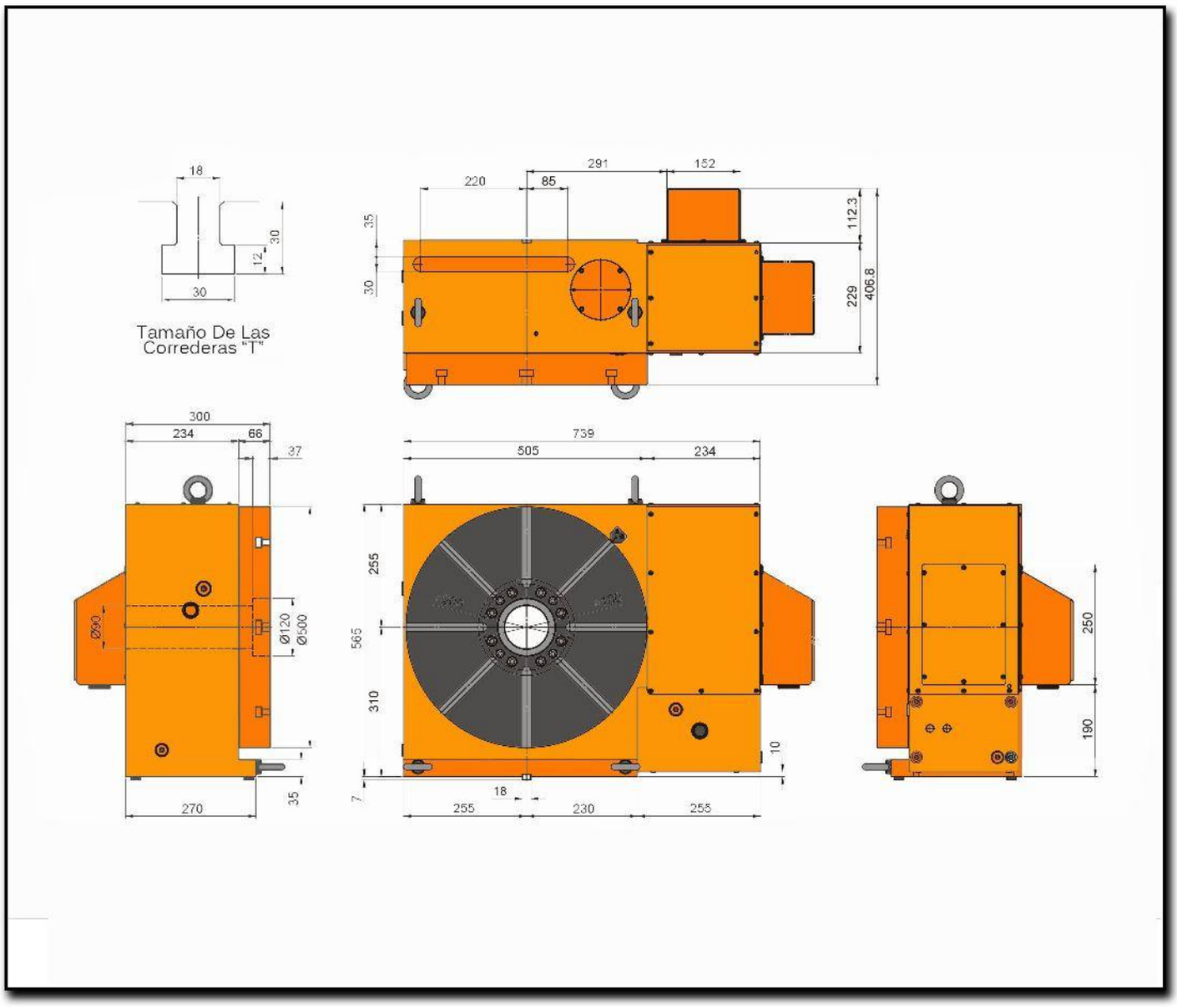
18
30
12
30
Tamaño De Las
Correderas "T"
291
152
220
85
35
30
112.3
229
406.8
300
234
66
37
Ø90
Ø120
Ø500
270
35
739
505
234
255
565
310
10
7
18
255
230
255
250
190

RH SERIES

SERVO SLIDES WITH LINEAR GUIDES AND BALL SCREW

RH150-400L

Servo Slide With Linear Guideways And Ball Screw

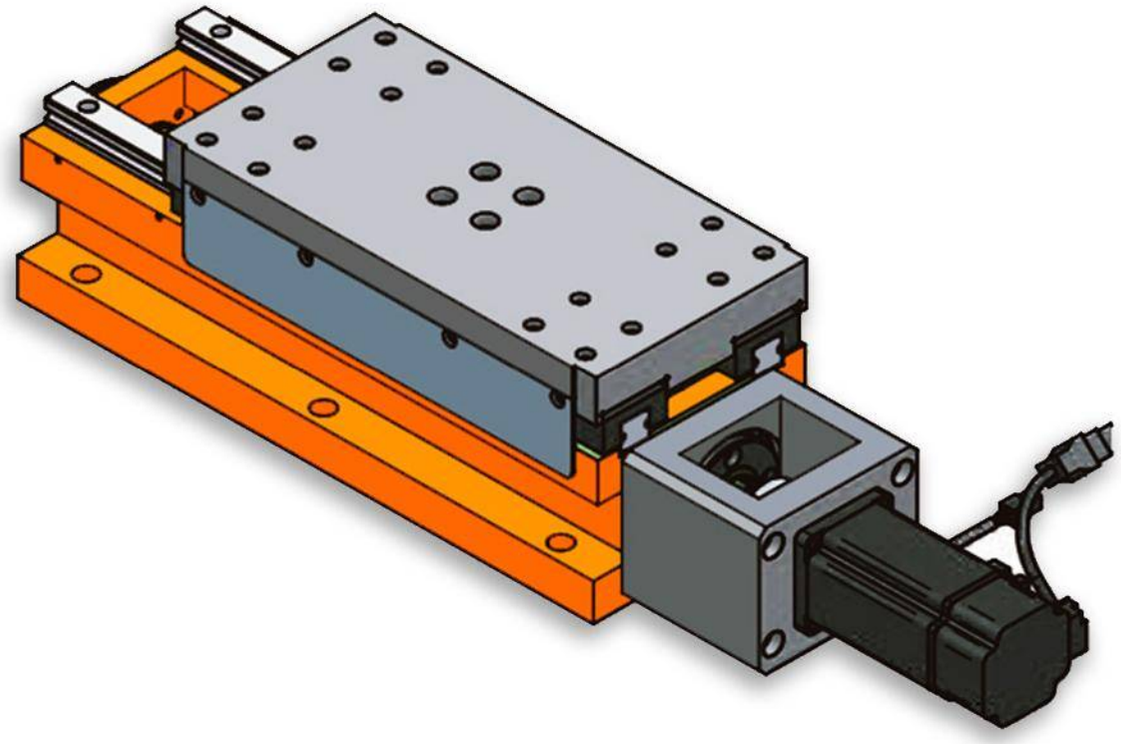

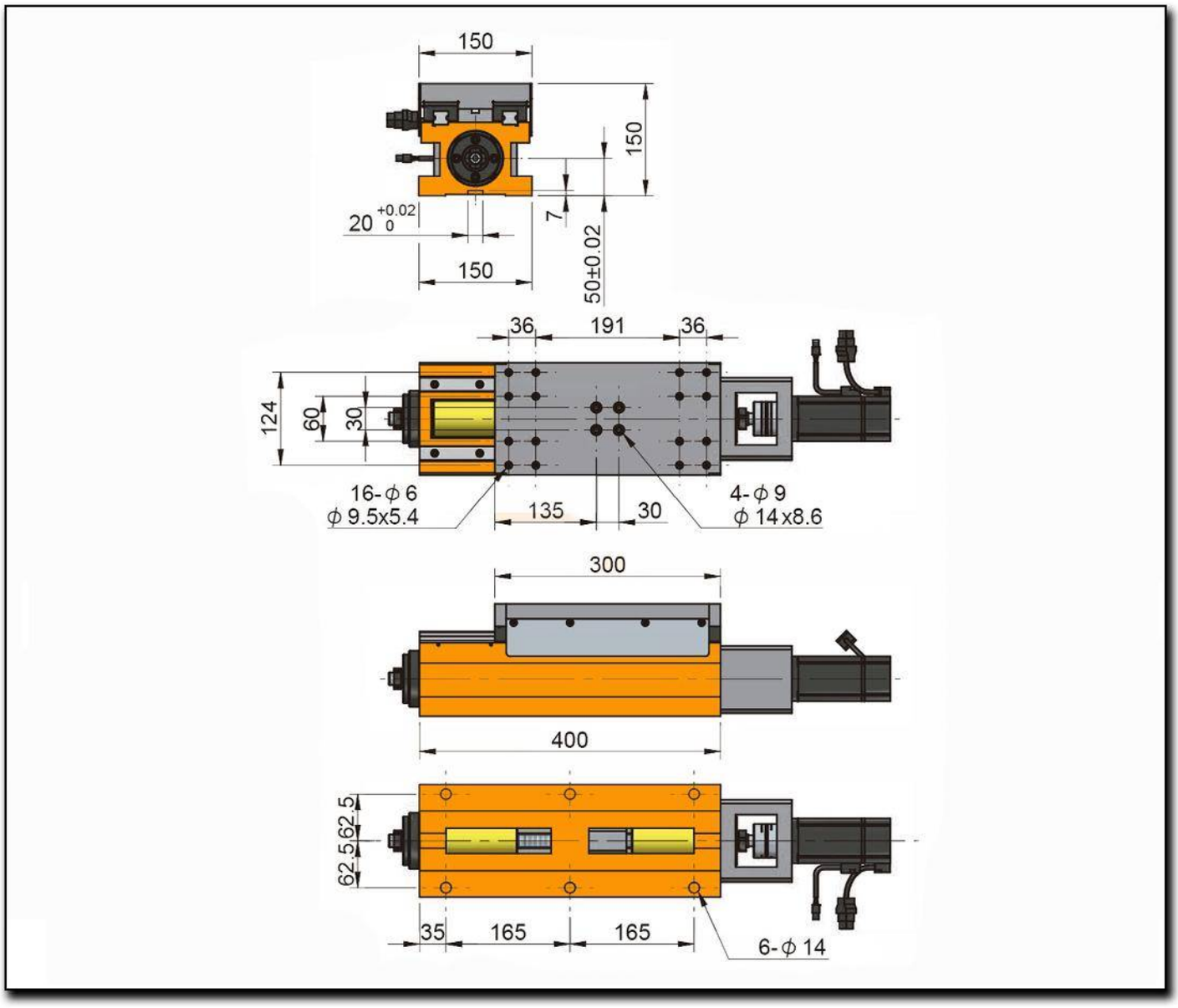
150
150
7
20 +0.02 0
150
50±0.02
36
191
36
124
60
30
16-ϕ 6
ϕ 9.5x5.4
135
30
4-ϕ 9
ϕ 14x8.6
300
400
62.5
62.5
35
165
165
6-ϕ 14

Characteristics & Dimensions

MODEL	RH150-400L
W	*150.00*
L	*400.00*
Maximum Slide Stroke	*90.00*
Ball Screw Type	*Ø20 x 5*
Maximum Slide Load Capacity ***(Kg)***	*120.00*
Total Device Weight ***(Kg)***	*47.00*

**** Servo motor mounting base and steel telescopic covers are included*
***** All dimensions are given in millimeters.*

RH200-400L

Servo Slide With Linear Guideways And Ball Screw

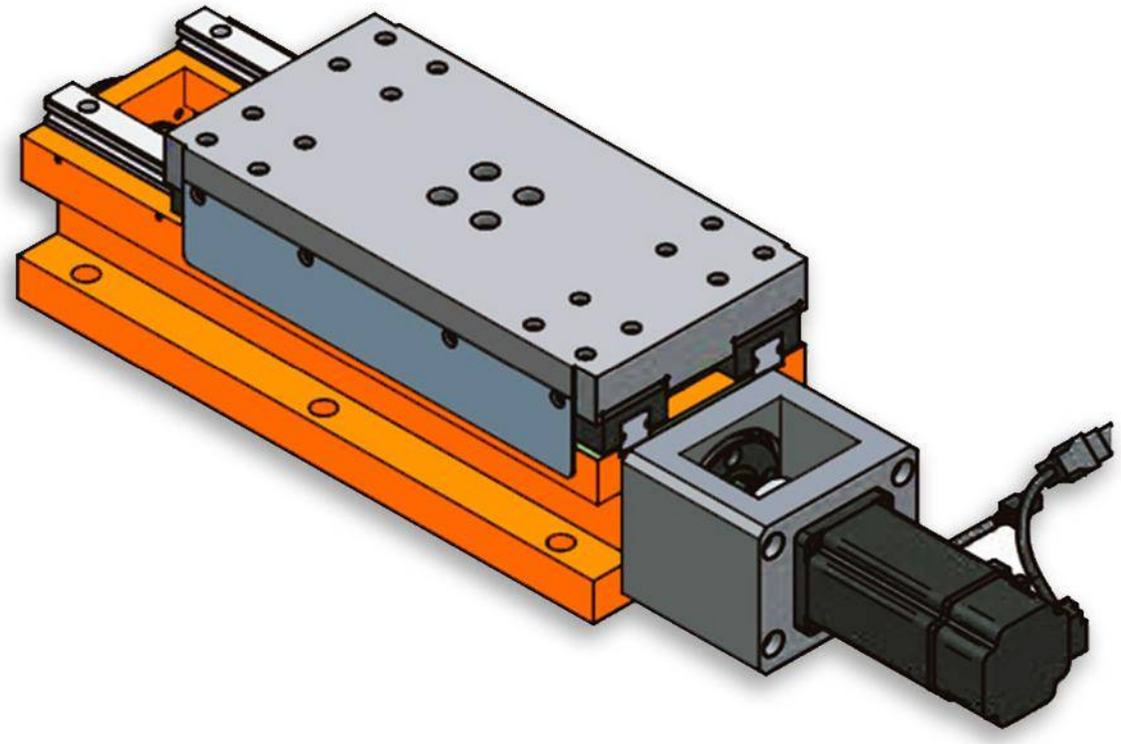

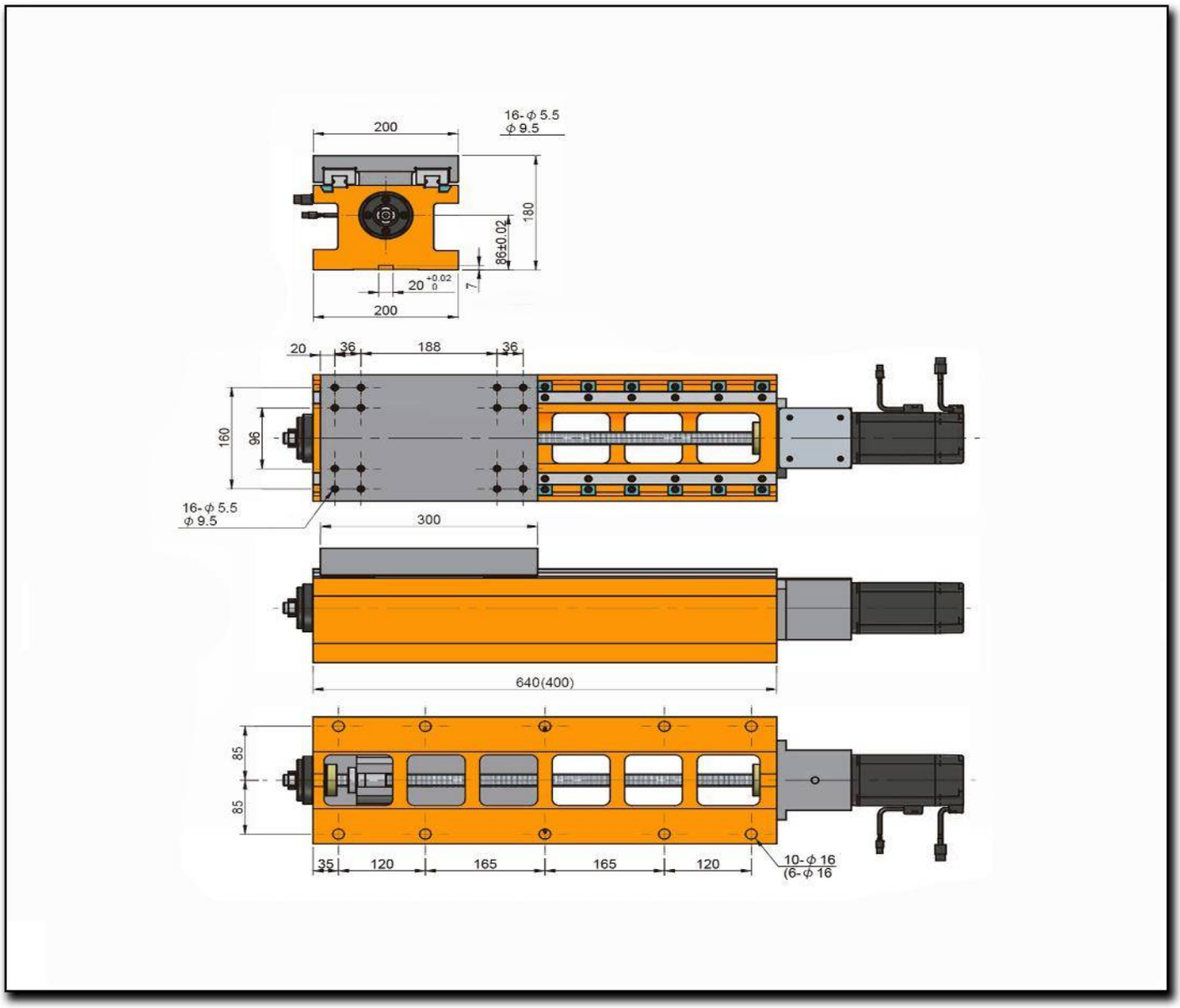
200
16-φ 5.5
φ 9.5
180
86±0.02
7
20 +0.02 0
200
20
36
188
36
160
96
16-φ 5.5
φ 9.5
300
640(400)
85
85
35
120
165
165
120
10-φ 16
(6-φ 16

Characteristics & Dimensions

MODEL	RH200-400L
W	*200.00*
L	*400.00*
Maximum Slide Stroke	*100.00*
Ball Screw Type	*Ø20 x 5*
Maximum Slide Load Capacity ***(Kg)***	*150.00*
Total Device Weight ***(Kg)***	*59.00*

**** Servo motor mounting base and steel telescopic covers are included*
***** All dimensions are given in millimeters.*

RH200-640L

Servo Slide With Linear Guideways And Ball Screw

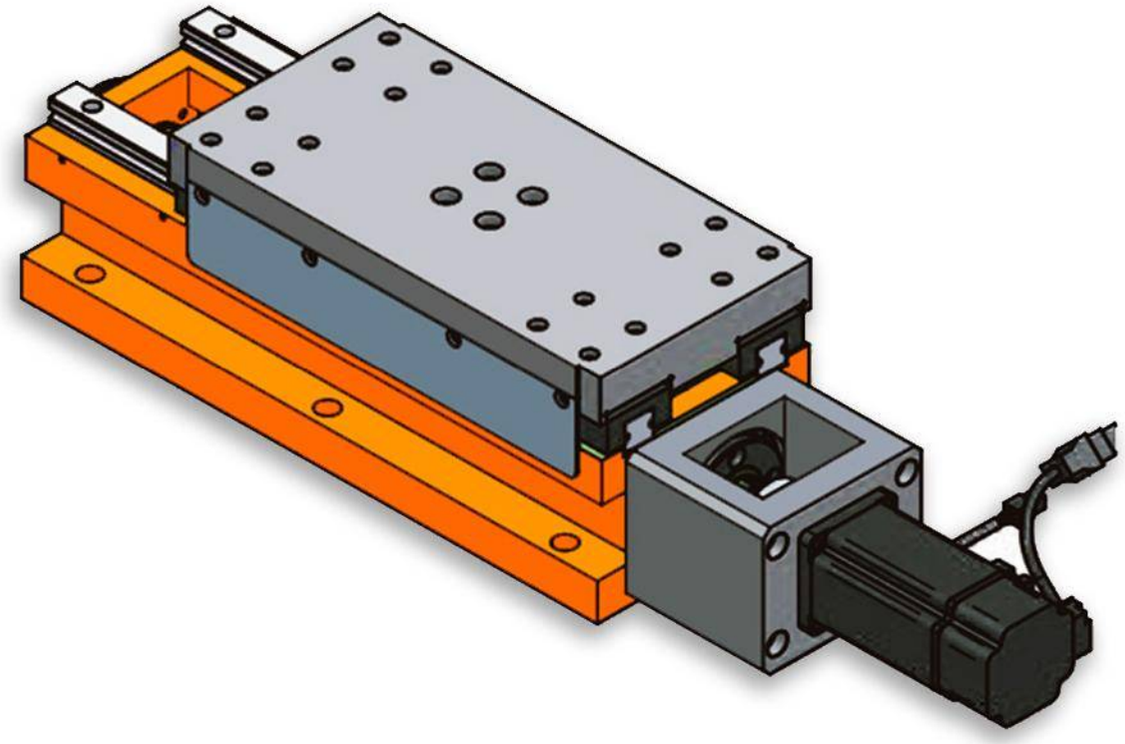

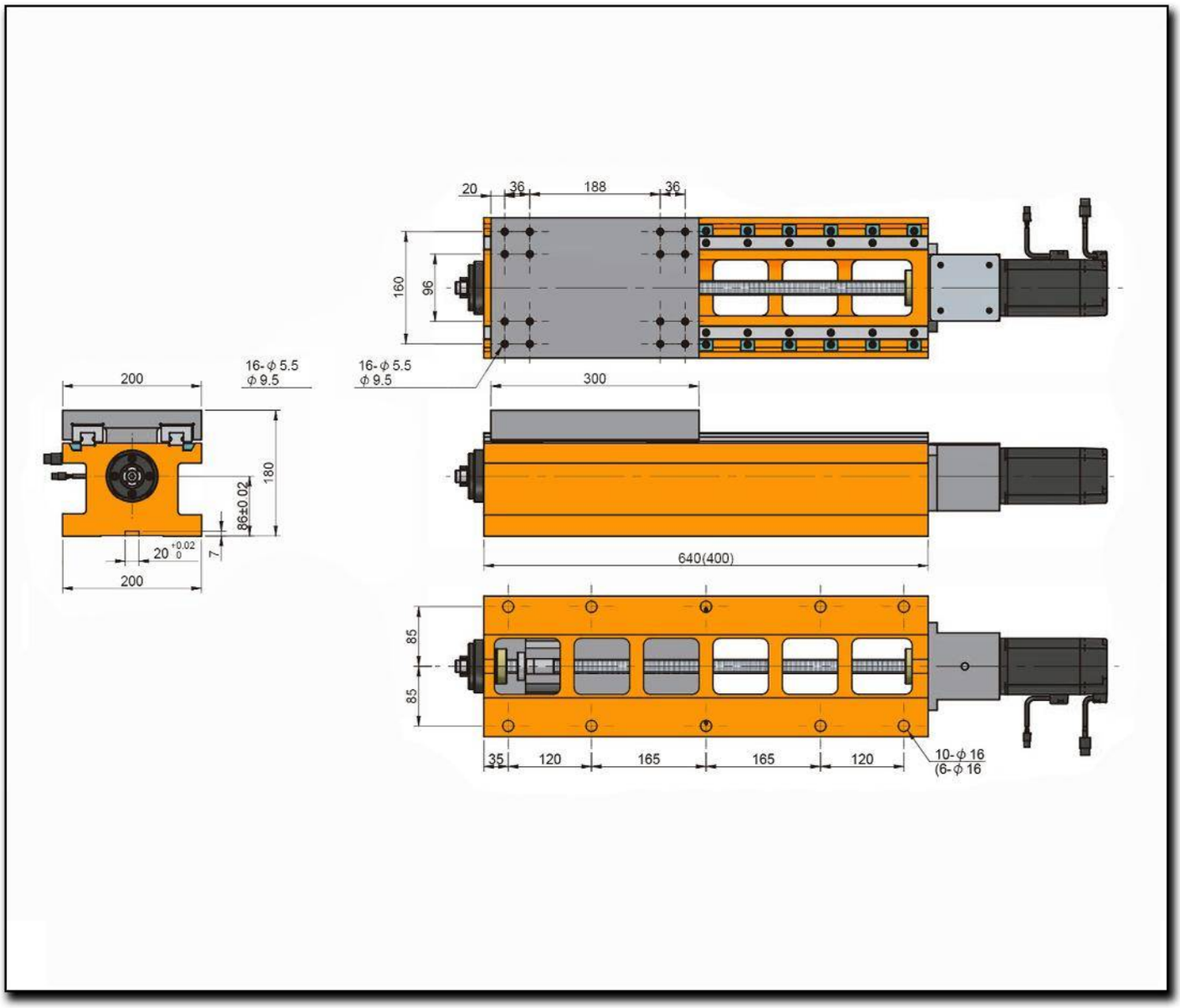
20
36
188
36
160
96
16-ϕ 5.5
ϕ 9.5
16-ϕ 5.5
ϕ 9.5
300
200
180
86±0.02
7
20 +0.02 0
200
640(400)
85
85
35
120
165
165
120
10-ϕ 16
(6-ϕ 16

Characteristics & Dimensions

MODEL	RH200-640L
W	*200.00*
L	*640.00*
Maximum Slide Stroke	*340.00*
Ball Screw Type	*Ø20 x 5*
Maximum Slide Load Capacity ***(Kg)***	*150.00*
Total Device Weight ***(Kg)***	*80.00*

**** Servo motor mounting base and steel telescopic covers are included*
***** All dimensions are given in millimeters.*

RH250-520L

Servo Slide With Linear Guideways And Ball Screw

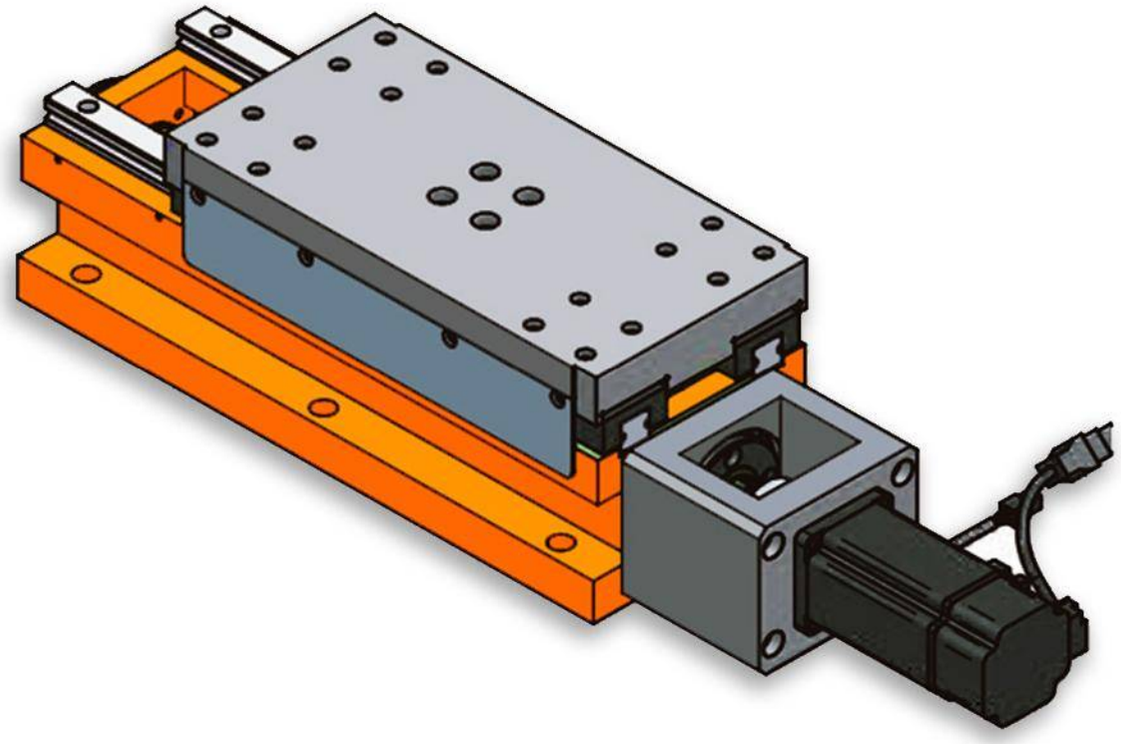

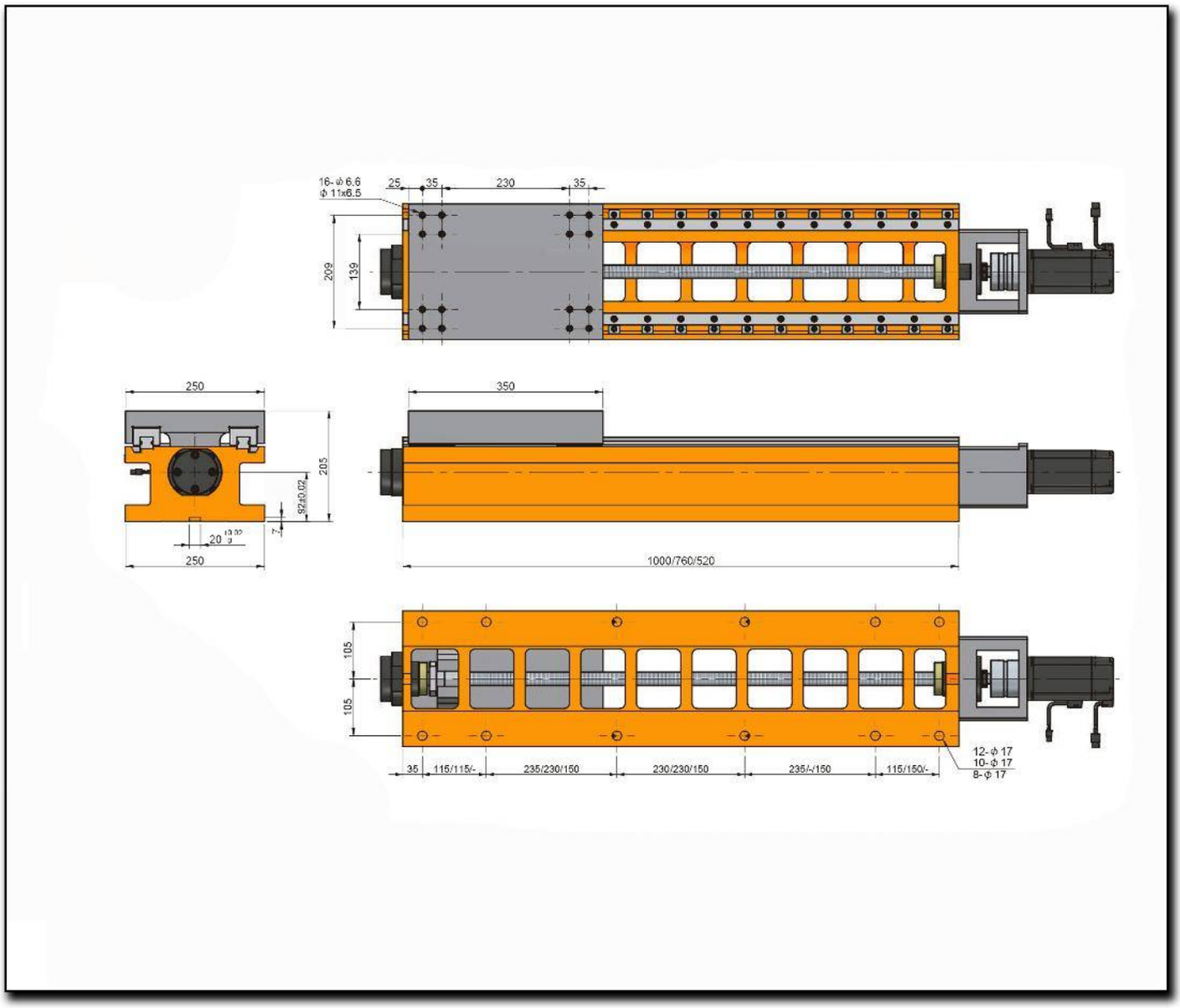
16-φ 6.6
φ 11x6.5
25
35
230
35
209
139
250
205
S2±0.02
7
250
350
1000/760/520
105
105
35
115/115/-
235/230/150
230/230/150
235/-/150
115/150/-
12-φ 17
10-φ 17
8-φ 17

Characteristics & Dimensions

MODEL	RH250-520L
W	*250.00*
L	*520.00*
Maximum Slide Stroke	*170.00*
Ball Screw Type	*Ø25 x 5*
Maximum Slide Load Capacity ***(Kg)***	*250.00*
Total Device Weight ***(Kg)***	*98.00*

**** Servo motor mounting base and steel telescopic covers are included*
***** All dimensions are given in millimeters.*

RH250-760L

Servo Slide With Linear Guideways And Ball Screw

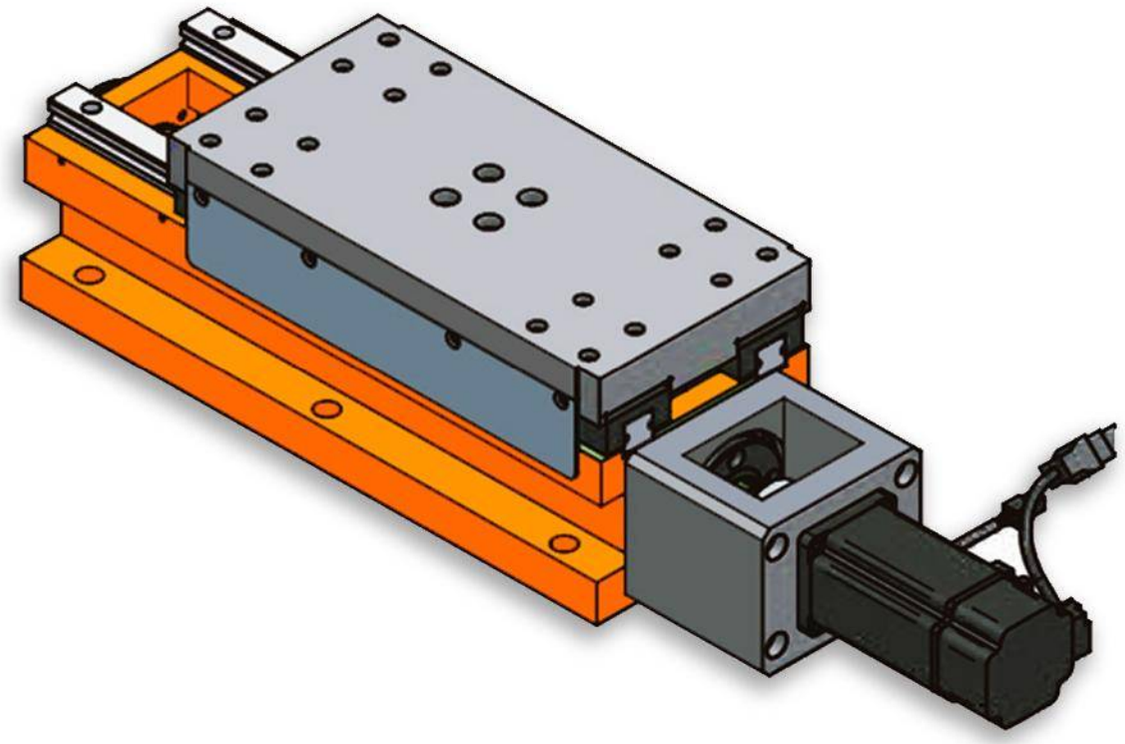

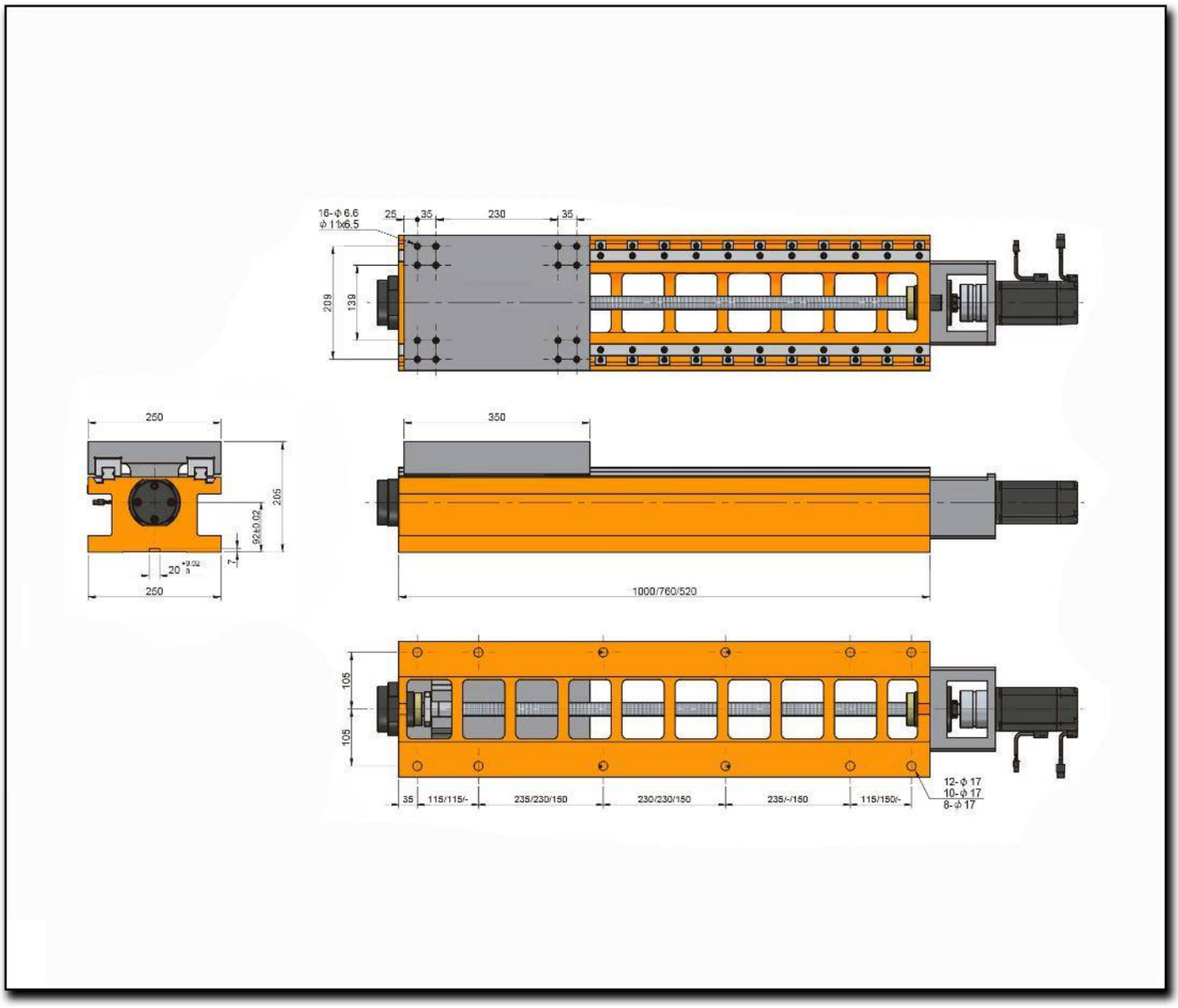
16-ϕ 6.6
ϕ 11x6.5
25
35
230
35
209
139
250
205
92±0.02
7
20 +0.02 0
250
350
1000/760/520
105
105
35
115/115/-
235/230/150
230/230/150
235/-/150
115/150/-
12-ϕ 17
10-ϕ 17
8-ϕ 17

Characteristics & Dimensions

MODEL	RH250-760L
W	*250.00*
L	*760.00*
Maximum Slide Stroke	*410.00*
Ball Screw Type	*Ø25 x 5*
Maximum Slide Load Capacity ***(Kg)***	*250.00*
Total Device Weight ***(Kg)***	*136.00*

**** Servo motor mounting base and steel telescopic covers are included*
***** All dimensions are given in millimeters.*

RH250-1000L

Servo Slide With Linear Guideways And Ball Screw

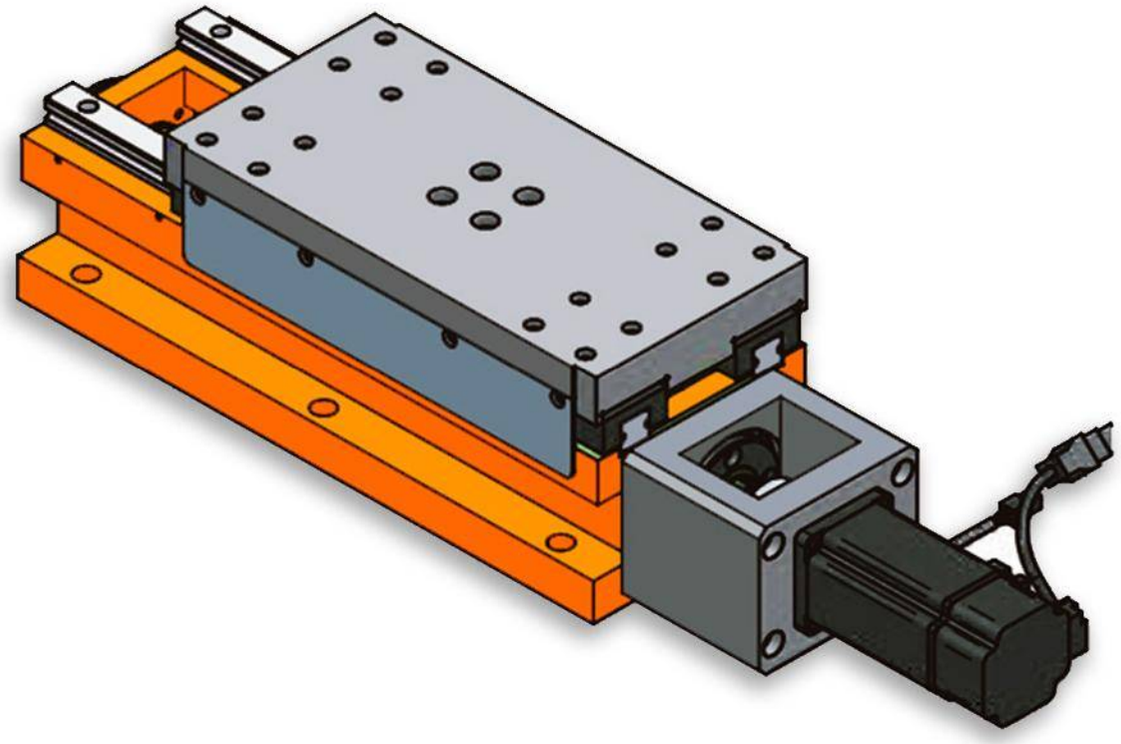

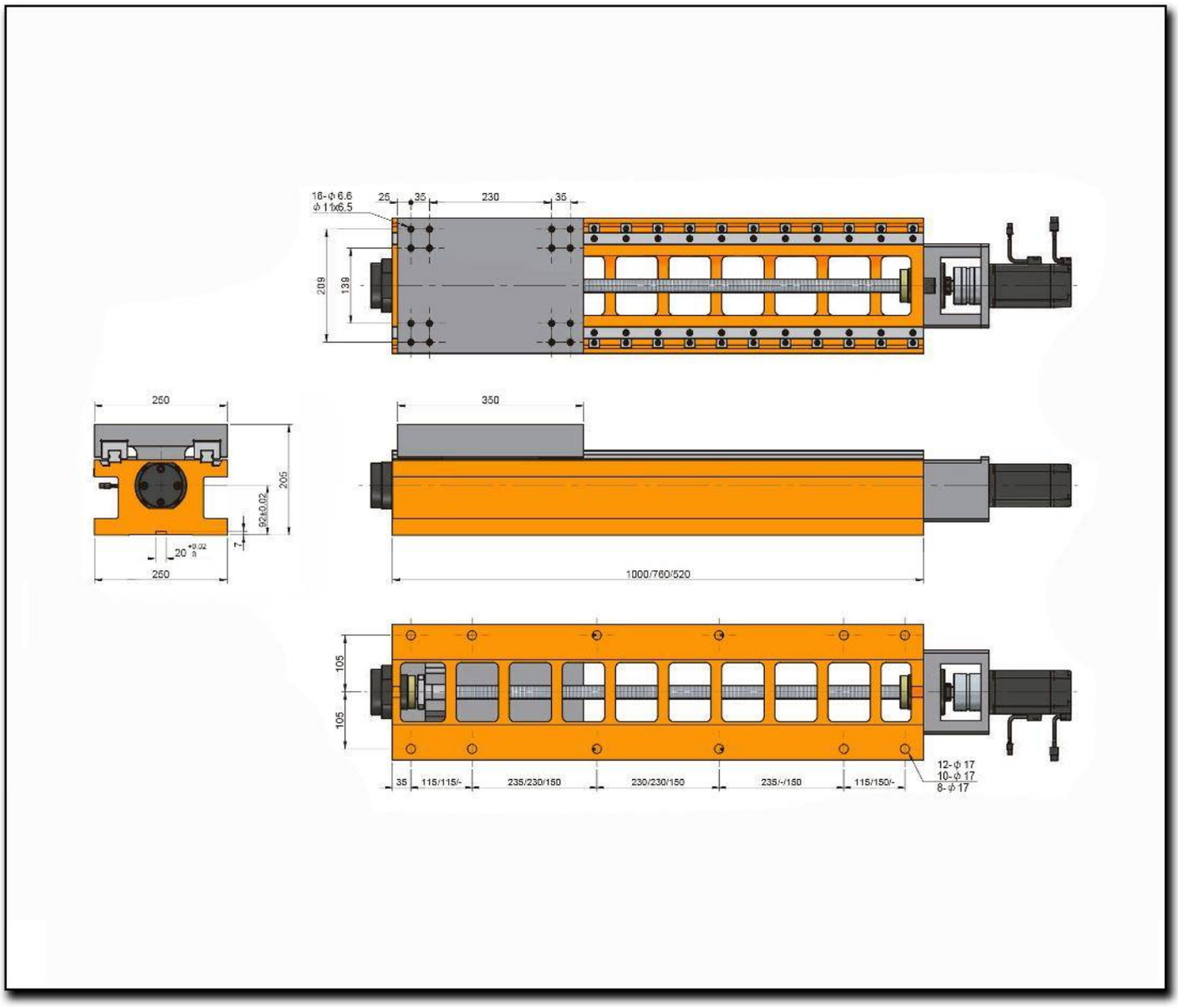
16-Φ 6.6
Φ 11x6.5
25
35
230
35
209
139
260
205
92±0.02
20
260
350
1000/760/520
105
105
35
115/115/-
235/230/150
230/230/150
235/-/150
115/150/-
12-Φ 17
10-Φ 17
8-Φ 17

Characteristics & Dimensions

MODEL	RH250-1000L
W	*250.00*
L	*1000.00*
Maximum Slide Stroke	*650.00*
Ball Screw Type	*Ø25 x 5*
Maximum Slide Load Capacity ***(Kg)***	*250.00*
Total Device Weight ***(Kg)***	*160.00*

**** Servo motor mounting base and steel telescopic covers are included*
***** All dimensions are given in millimeters.*

RH300-520L

Servo Slide With Linear Guideways And Ball Screw

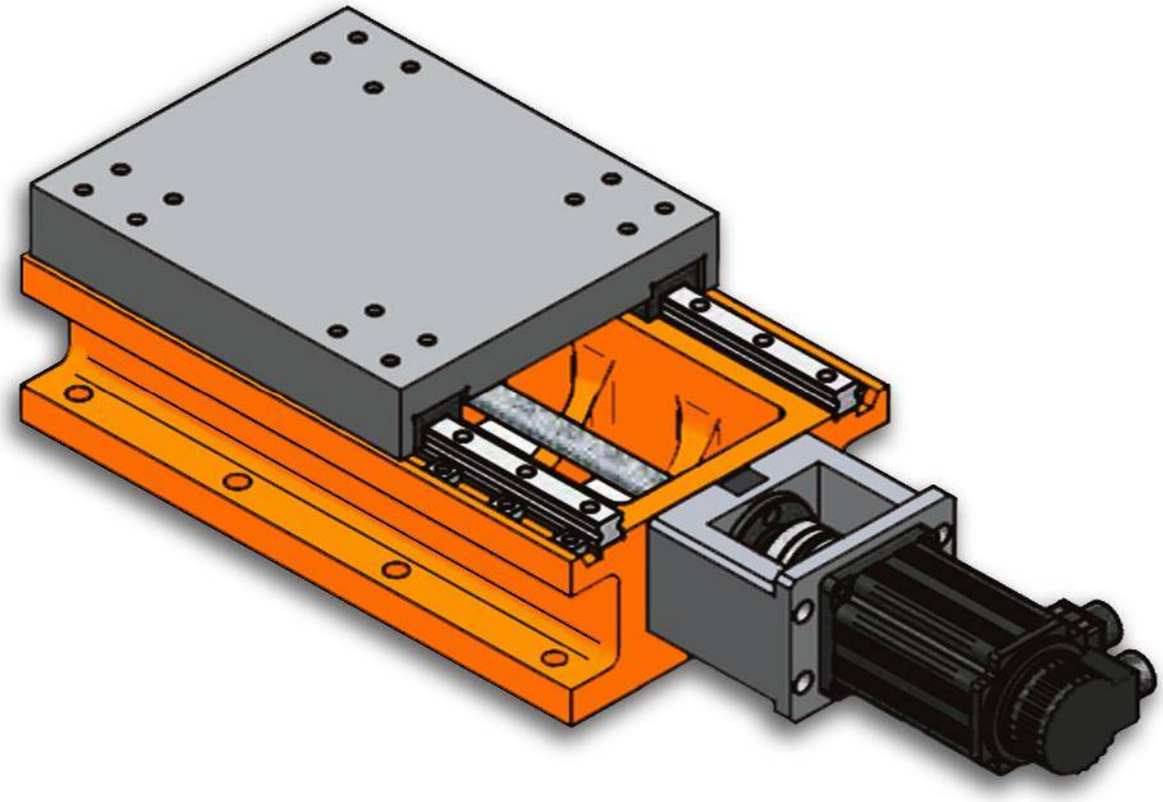

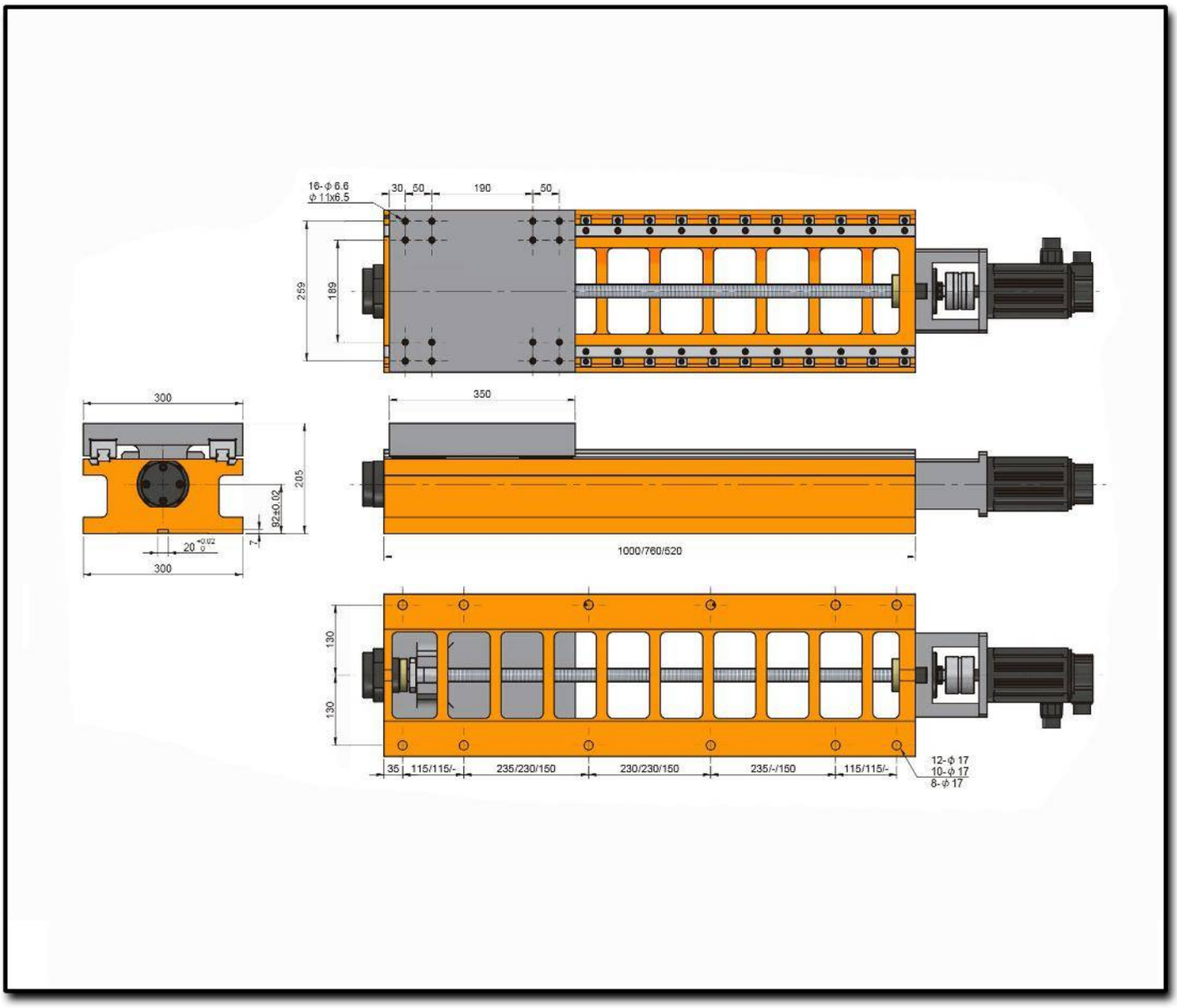
16-φ 6.6
φ 11x6.5
30
50
190
50
259
189
300
350
205
92±0.02
20 +0.02 0
7
300
1000/760/520
190
190
35
115/115/-
235/230/150
230/230/150
235/-/150
115/115/-
12-φ 17
10-φ 17
8-φ 17

Characteristics & Dimensions

MODEL	RH300-520L
W	*300.00*
L	*520.00*
Maximum Slide Stroke	*170.00*
Ball Screw Type	*Ø25 x 5*
Maximum Slide Load Capacity ***(Kg)***	*350.00*
Total Device Weight ***(Kg)***	*113.00*

**** Servo motor mounting base and steel telescopic covers are included*
***** All dimensions are given in millimeters.*

RH300-760L

Servo Slide With Linear Guideways And Ball Screw

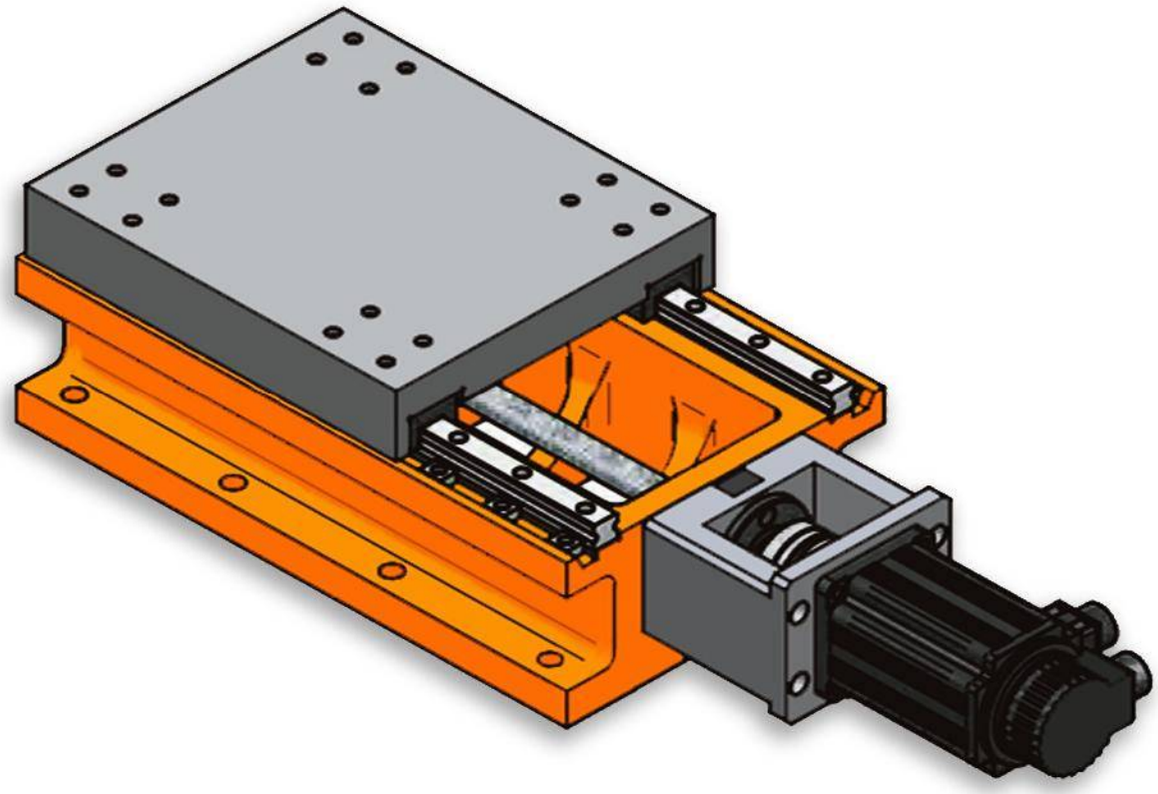

Characteristics & Dimensions

MODEL	RH300-760L
W	*300.00*
L	*760.00*
Maximum Slide Stroke	*410.00*
Ball Screw Type	*Ø25 x 5*
Maximum Slide Load Capacity *(Kg)*	*350.00*
Total Device Weight *(Kg)*	*143.00*

**** Servo motor mounting base and steel telescopic covers are included*
***** All dimensions are given in millimeters.*

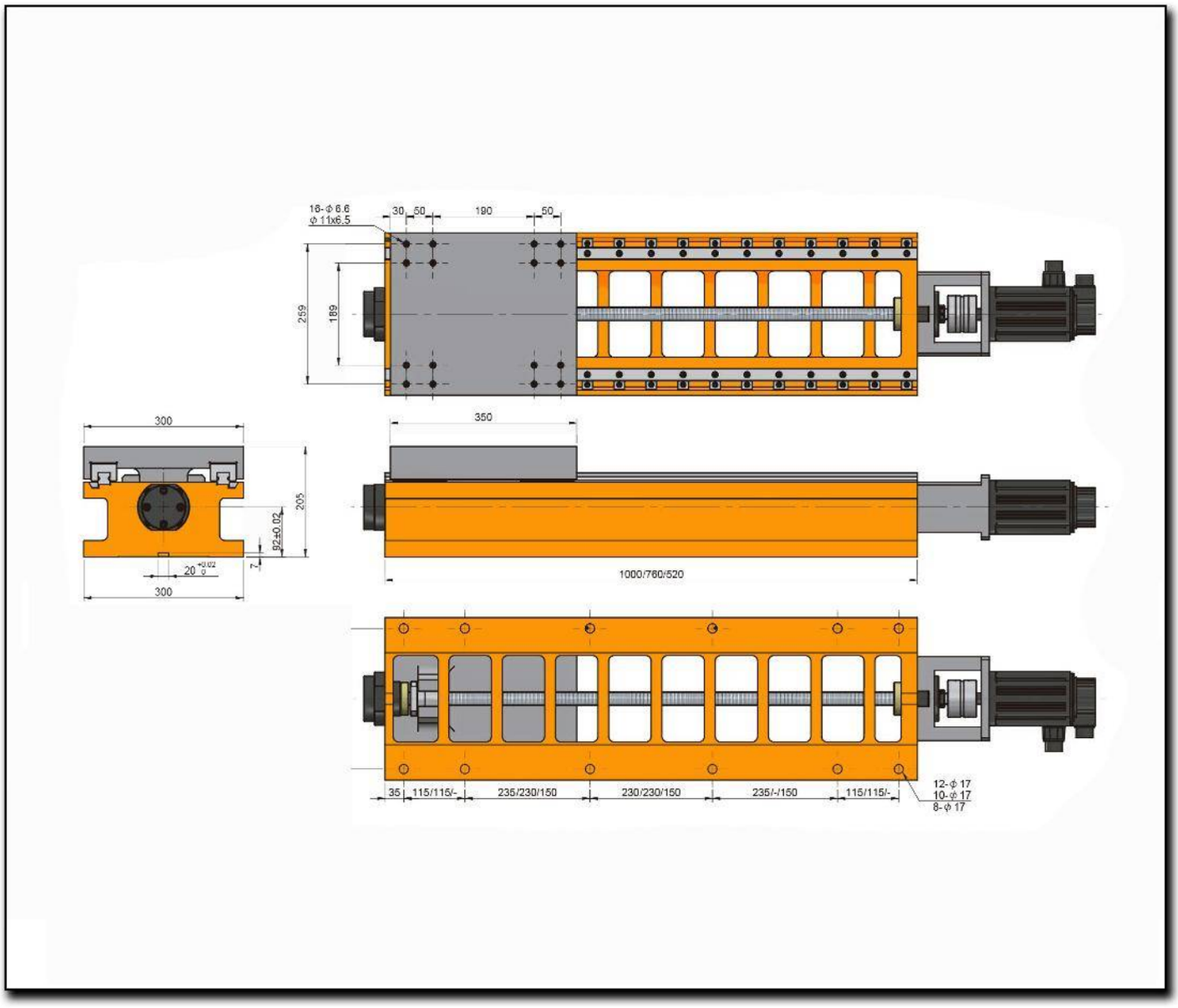
18-ϕ 6.6
ϕ 11x6.5
30
50
190
50
259
189
300
205
92±0.02
7
20
300
350
1000/760/520
35
115/115/-
235/230/150
230/230/150
235/-/150
115/115/-
12-ϕ 17
10-ϕ 17
8-ϕ 17

RH300-1000L

Servo Slide With Linear Guideways And Ball Screw

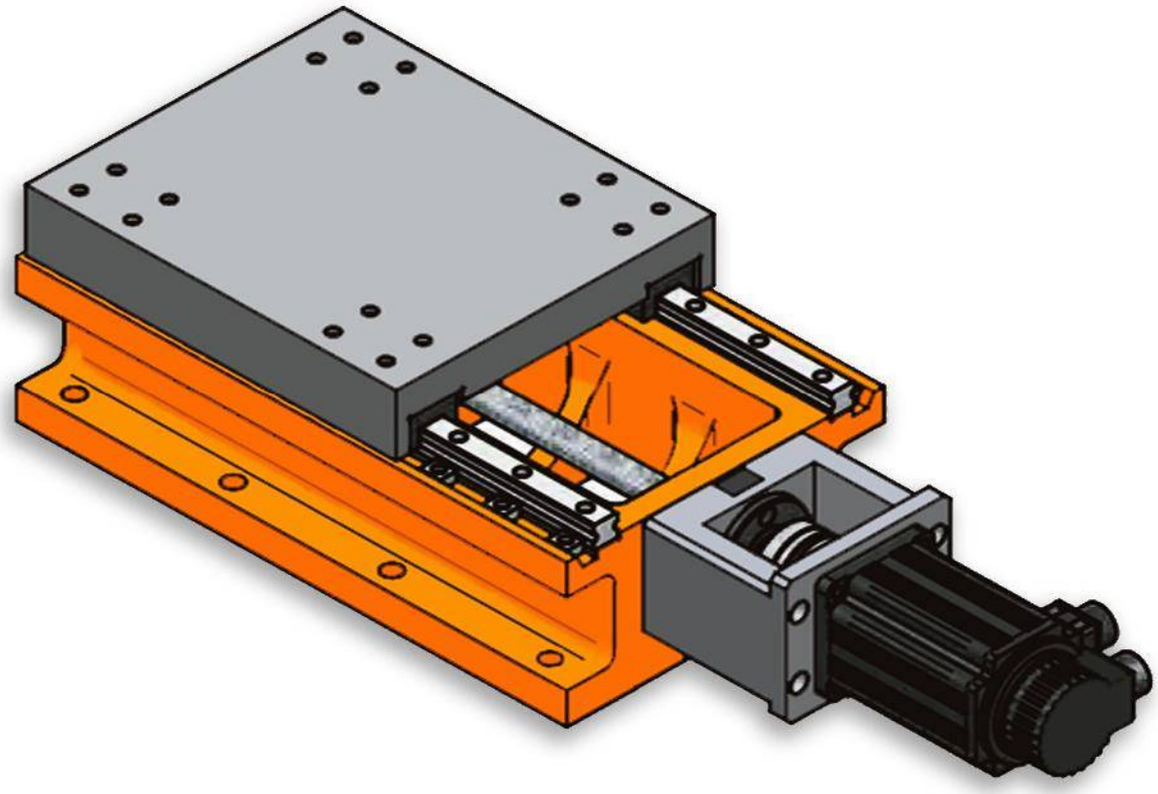

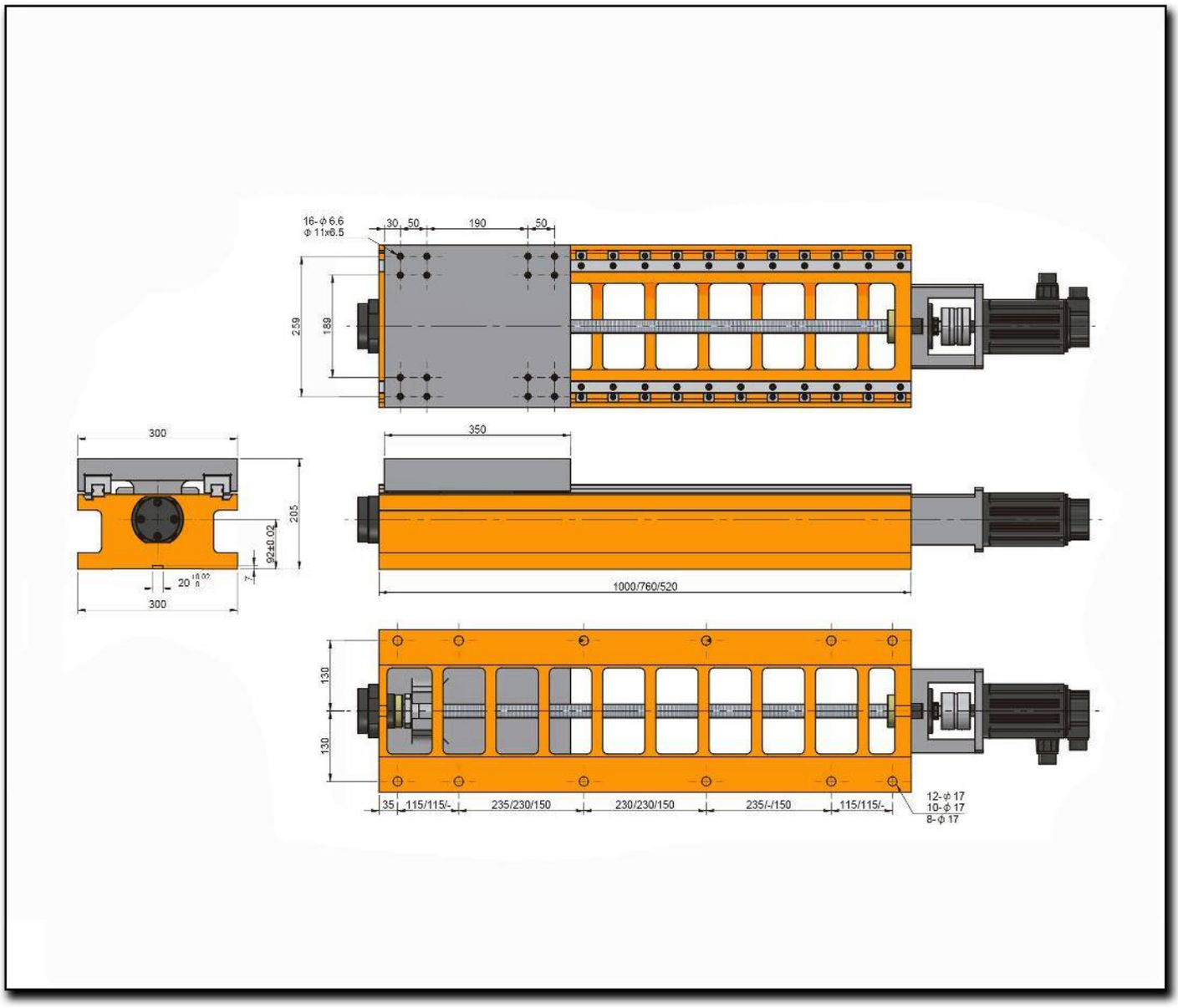
16-φ6.6
φ11x6.5
30
50
190
50
259
189
300
205
92±0.02
20
300
350
1000/760/520
130
130
35
115/115/-
235/230/150
230/230/150
235/-/150
115/115/-
12-φ17
10-φ17
8-φ17

Characteristics & Dimensions

MODEL	RH300-1000L
W	*300.00*
L	*1000.00*
Maximum Slide Stroke	*650.00*
Ball Screw Type	*Ø25 x 5*
Maximum Slide Load Capacity ***(Kg)***	*350.00*
Total Device Weight ***(Kg)***	*168.00*

**** Servo motor mounting base and steel telescopic covers are included*
***** All dimensions are given in millimeters.*

RHE SERIES

SERVO SLIDES WITH LINEAR GUIDES AND BALL SCREW

RHE120-320L

Servo Slides With Linear Guides And Ball Screw

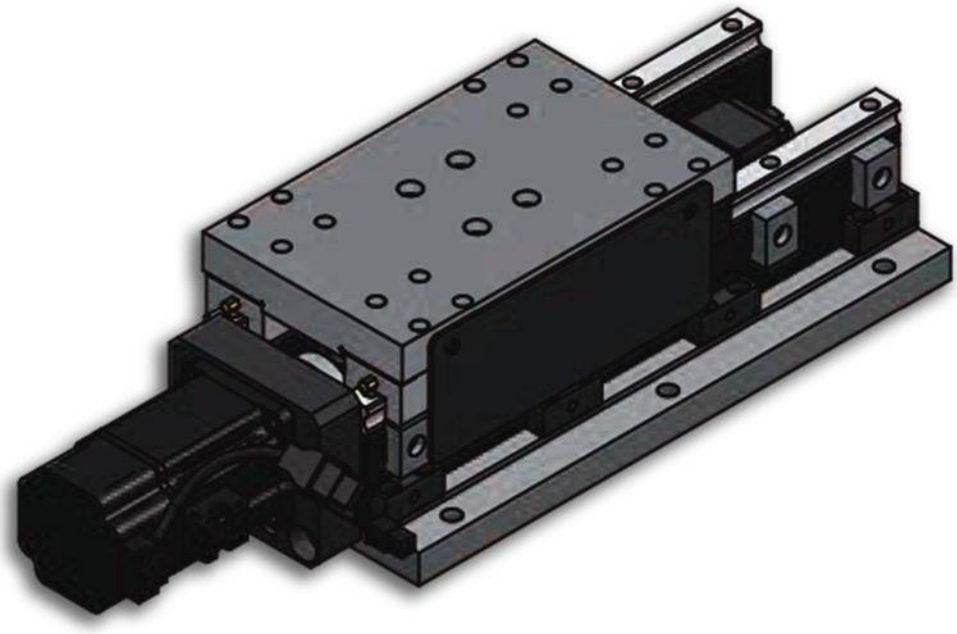

Characteristics & Dimenisions

MODEL	RHE120-320L
Sliding Table Dimensions	*120.00 x 200.00*
Dimensions Of Sliding Bench	*120.00 x 320.00*
Maximum Slide Stroke	*100.00*
Ball Screw Tipe	*Ø16 x 5 x C7*
Lineality	*15.00*
Maximum Slide Stroke *(Kg)*	*80.00*

*** **C5** & **C3** Grade Ball Screw aboilable upon customer request.*
**** Servo Motor Base, Coupling and Telescopic Steel Covers are included as standard accessories.*
***** All dimensions are given in millimeters.*

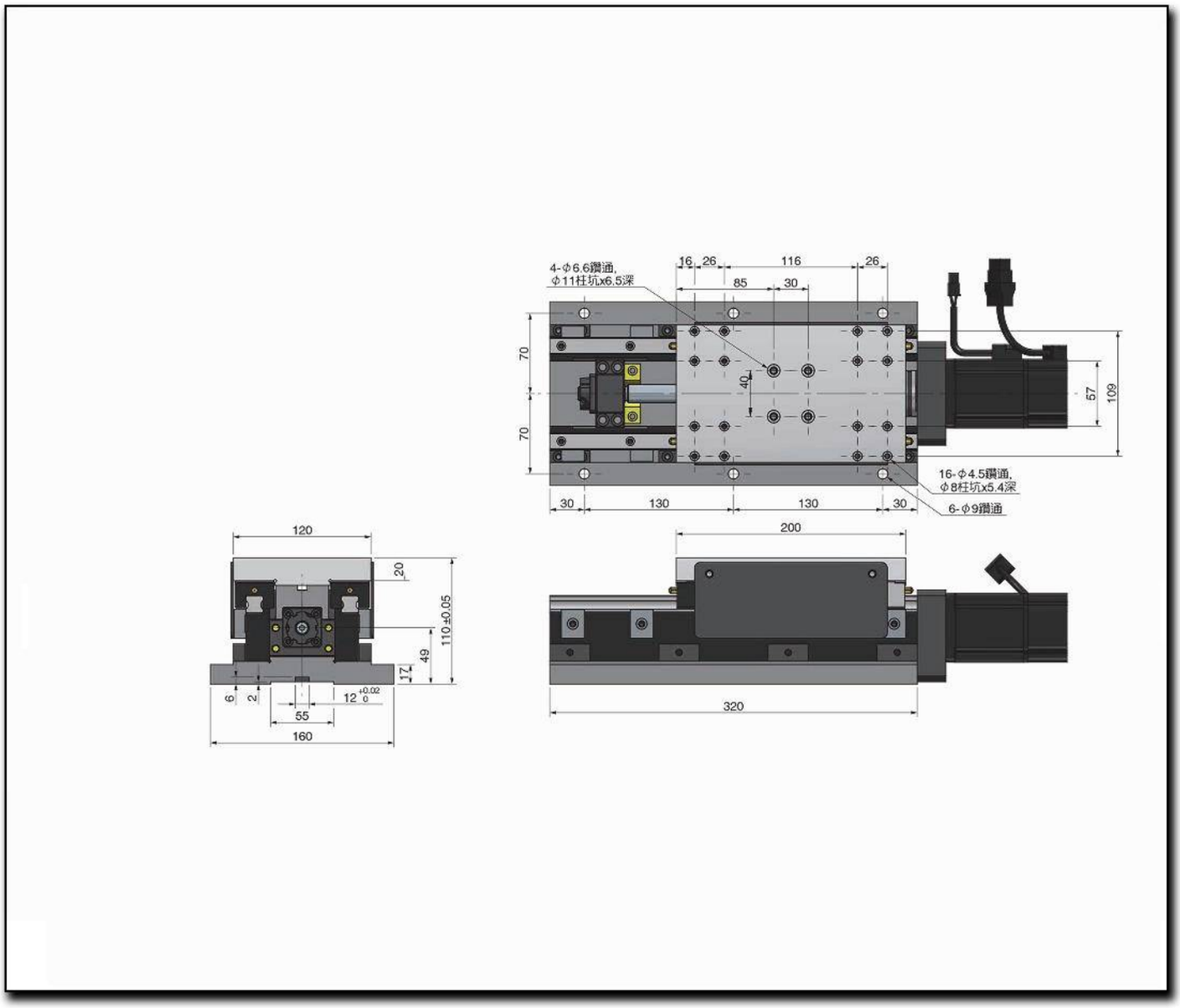
4-φ6.6鑽通,
φ11柱坑x6.5深
16
26
116
26
85
30
70
70
40
57
109
16-φ4.5鑽通,
φ8柱坑x5.4深
6-φ9鑽通
30
130
130
30
120
20
110±0.05
49
17
6
2
12 +0.02 0
55
160
200
320

RHE150-320L

Servo Slides With Linear Guides And Ball Screw

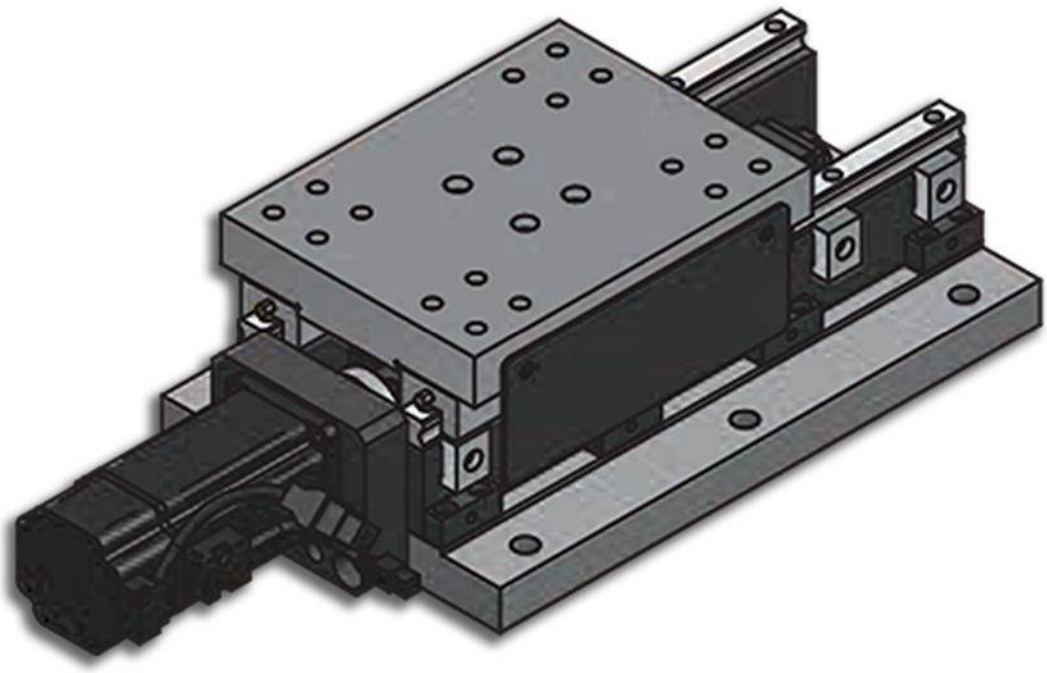

Characteristics & Dimenisions

MODEL	RHE150-320L
Sliding Table Dimensions	*150.00 x 200.00*
Dimensions Of Sliding Bench	*150.00 x 320.00*
Maximum Slide Stroke	*100.00*
Ball Screw Tipe	*Ø16 x 5 x C7*
Lineality	*15.00*
Maximum Slide Stroke *(Kg)*	*120.00*

*** **C5** & **C3** Grade Ball Screw aboilable upon customer request.*
**** Servo Motor Base, Coupling and Telescopic Steel Covers are included as standard accessories.*
***** All dimensions are given in millimeters.*

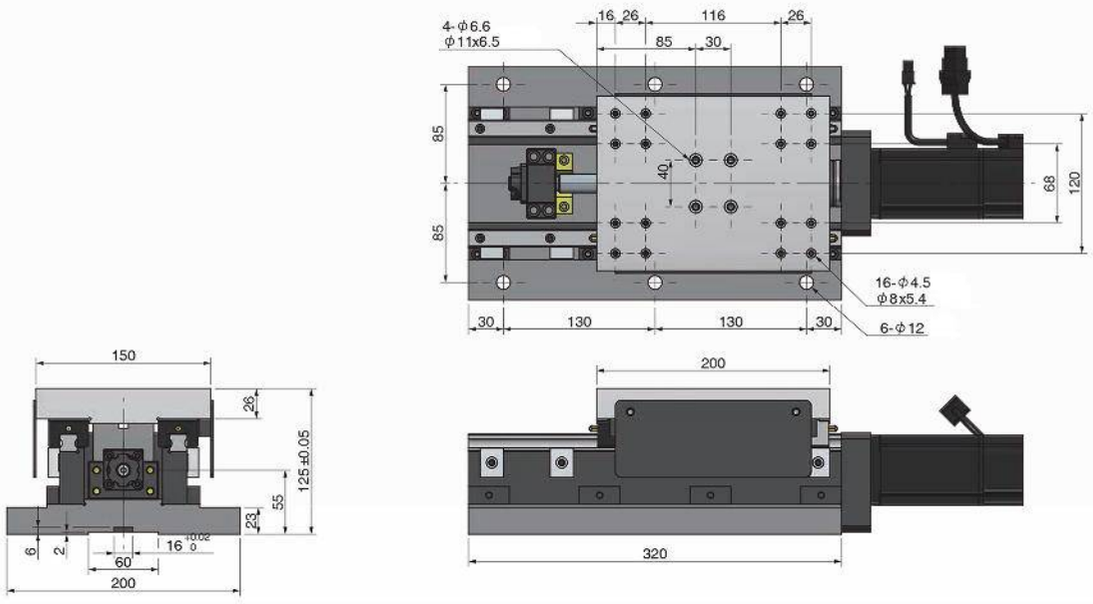
4-φ6.6
φ11x6.5
16
26
116
26
85
30
85
85
40
68
120
16-φ4.5
φ8x5.4
30
130
130
30
6-φ12
150
28
125±0.05
55
23
6
2
16 +0.02 0
60
200
200
320

RHE200-420L

Servo Slides With Linear Guides And Ball Screw

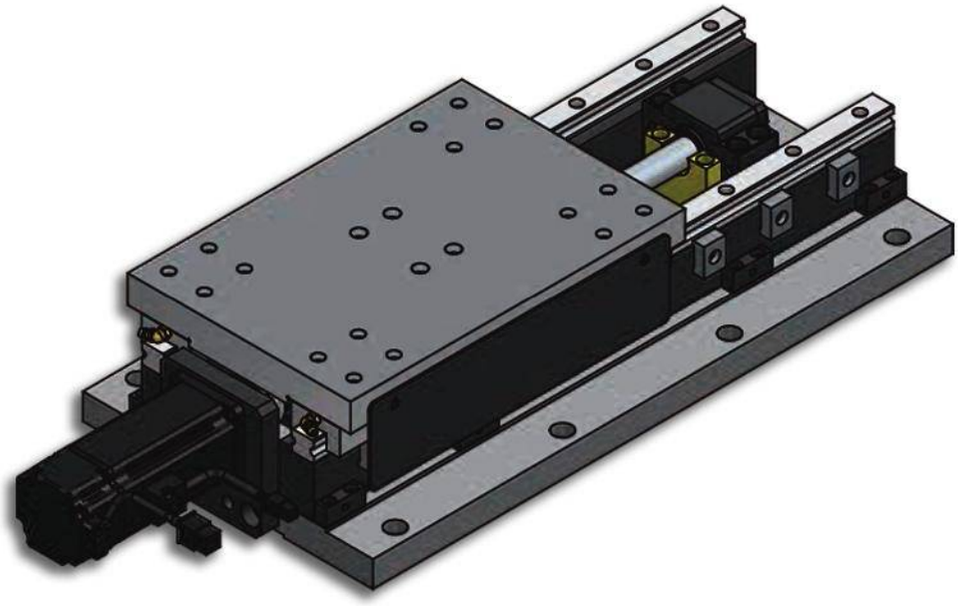

Characteristics & Dimenisions

MODEL	RHE200-420L
Sliding Table Dimensions	***200.00 x 300.00***
Dimensions Of Sliding Bench	***200.00 x 420.00***
Maximum Slide Stroke	***100.00***
Ball Screw Tipe	***Ø20 x 5 x C7***
Lineality	***20.00***
Maximum Slide Stroke *(Kg)*	***150.00***

*** **C5** & **C3** Grade Ball Screw aboilable upon customer request.*
**** Servo Motor Base, Coupling and Telescopic Steel Covers are included as standard accessories.*
***** All dimensions are given in millimeters.*

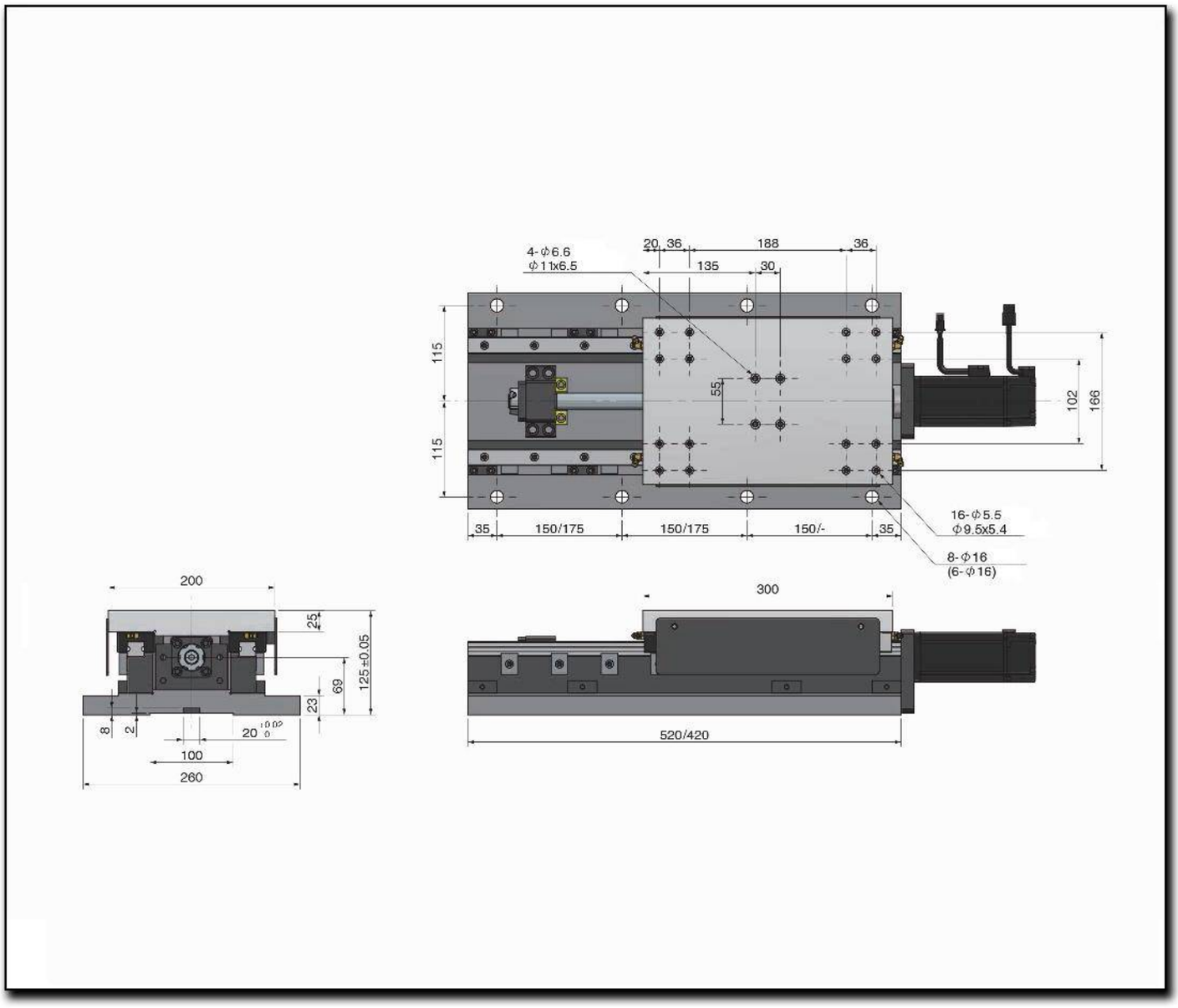
4-Φ6.6
Φ11x6.5
20
36
188
36
135
30
115
115
55
102
166
35
150/175
150/175
150/-
35
16-Φ5.5
Φ9.5x5.4
8-Φ16
(6-Φ16)
200
25
125±0.05
69
23
8
2
100
260
300
520/420

RHE200-520L

Servo Slides With Linear Guides And Ball Screw

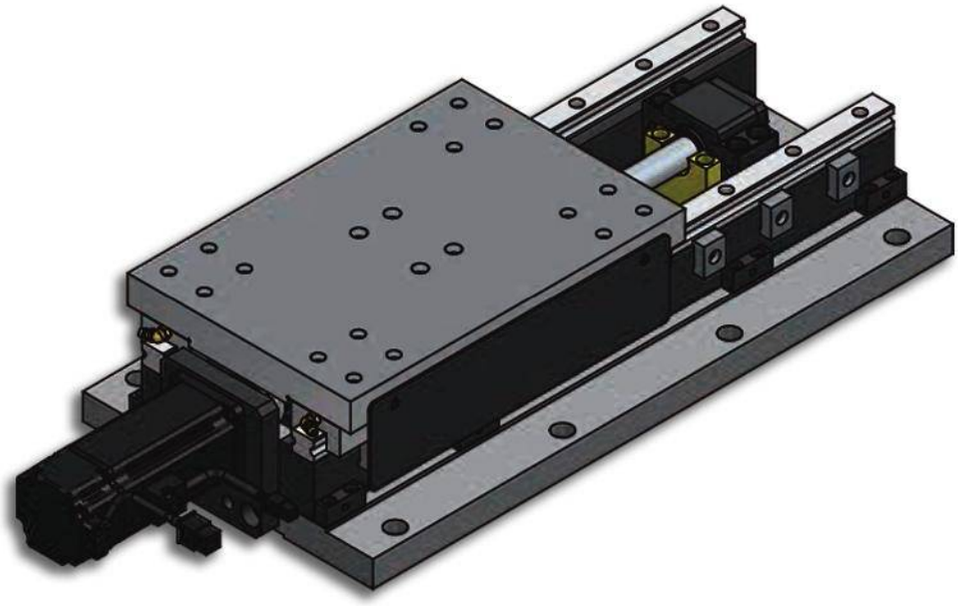

Characteristics & Dimenisions

MODEL	RHE200-520L
Sliding Table Dimensions	***200.00 x 300.00***
Dimensions Of Sliding Bench	***200.00 x 520.00***
Maximum Slide Stroke	***200.00***
Ball Screw Tipe	***Ø20 x 5 x C7***
Lineality	***20.00***
Maximum Slide Stroke *(Kg)*	***150.00***

*** **C5** & **C3** Grade Ball Screw abailable upon customer request.*
**** Servo Motor Base, Coupling and Telescopic Steel Covers are included as standard accessories.*
***** All dimensions are given in millimeters.*

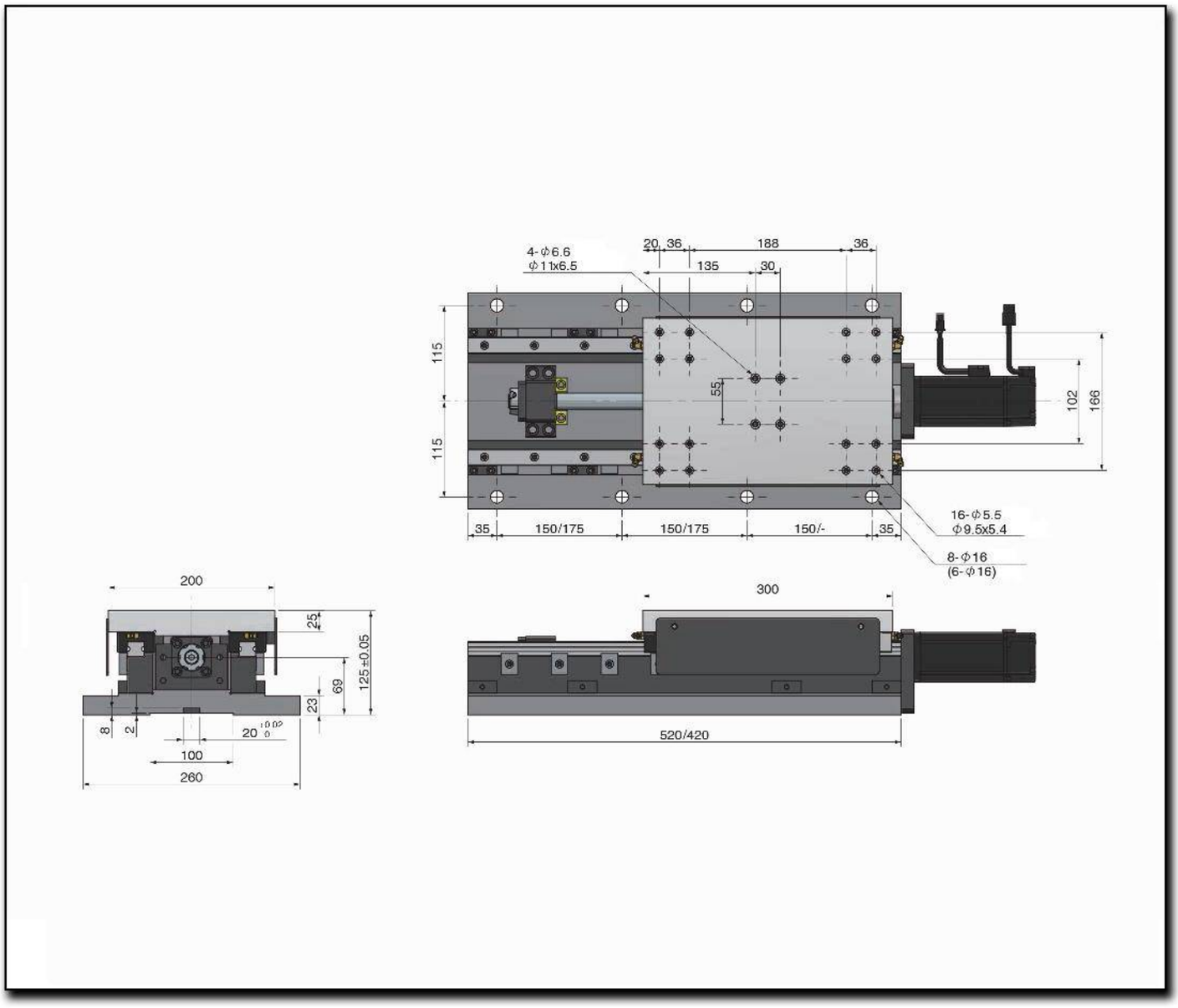
4-Φ6.6
Φ11x6.5
20
36
188
36
135
30
115
115
55
102
166
35
150/175
150/175
150/-
35
16-Φ5.5
Φ9.5x5.4
8-Φ16
(6-Φ16)
200
25
125±0.05
69
23
8
2
20
100
260
300
520/420

RHE250-420L

Servo Slides With Linear Guides And Ball Screw

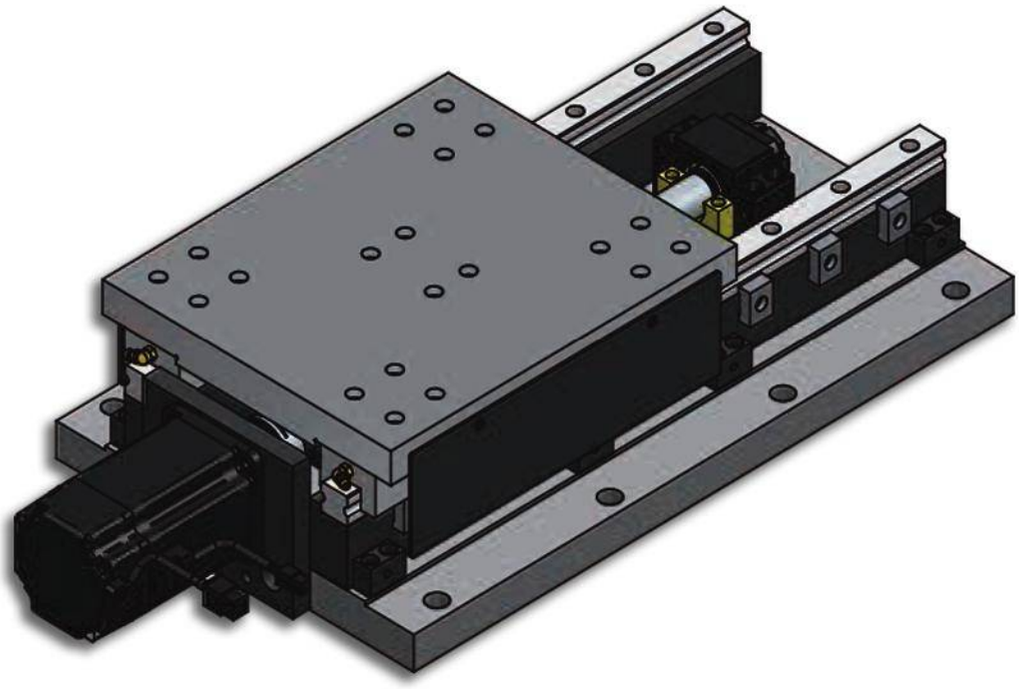

Characteristics & Dimenisions

MODEL	RHE250-420L
Sliding Table Dimensions	***250.00 x 300.00***
Dimensions Of Sliding Bench	***250.00 x 420.00***
Maximum Slide Stroke	***100.00***
Ball Screw Tipe	***Ø25 x 5 x C7***
Lineality	***25.00***
Maximum Slide Stroke *(Kg)*	***250.00***

*** **C5** & **C3** Grade Ball Screw abailable upon customer request.*
**** Servo Motor Base, Coupling and Telescopic Steel Covers are included as standard accessories.*
***** All dimensions are given in millimeters.*

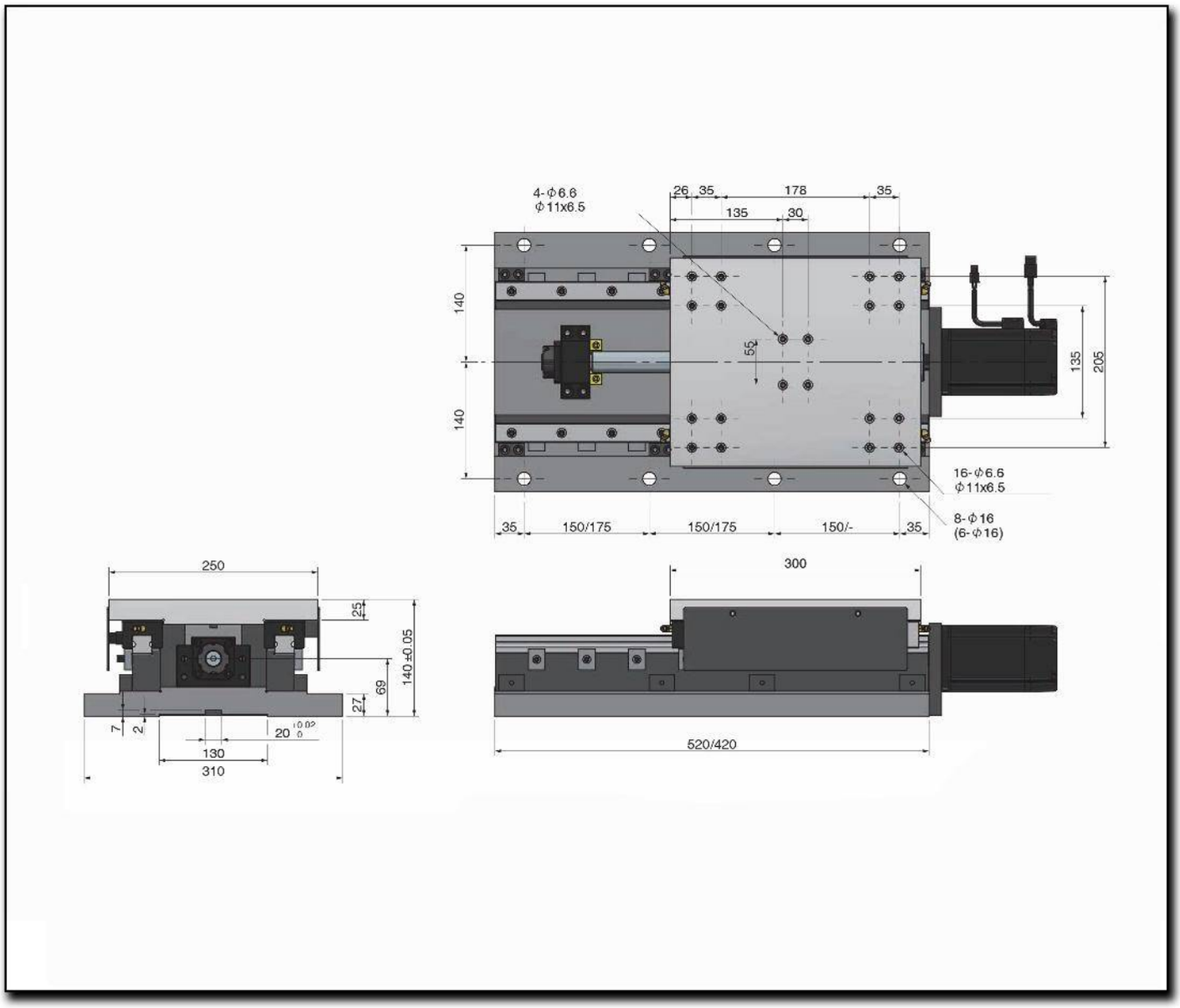
4-Φ6.6
Φ11x6.5
26
35
178
35
135
30
140
55
140
135
205
16-Φ6.6
Φ11x6.5
8-Φ16
(6-Φ16)
35
150/175
150/175
150/-
35
250
25
140 ±0.05
69
27
7
2
20
130
310
300
520/420

RHE250-520L

Servo Slides With Linear Guides And Ball Screw

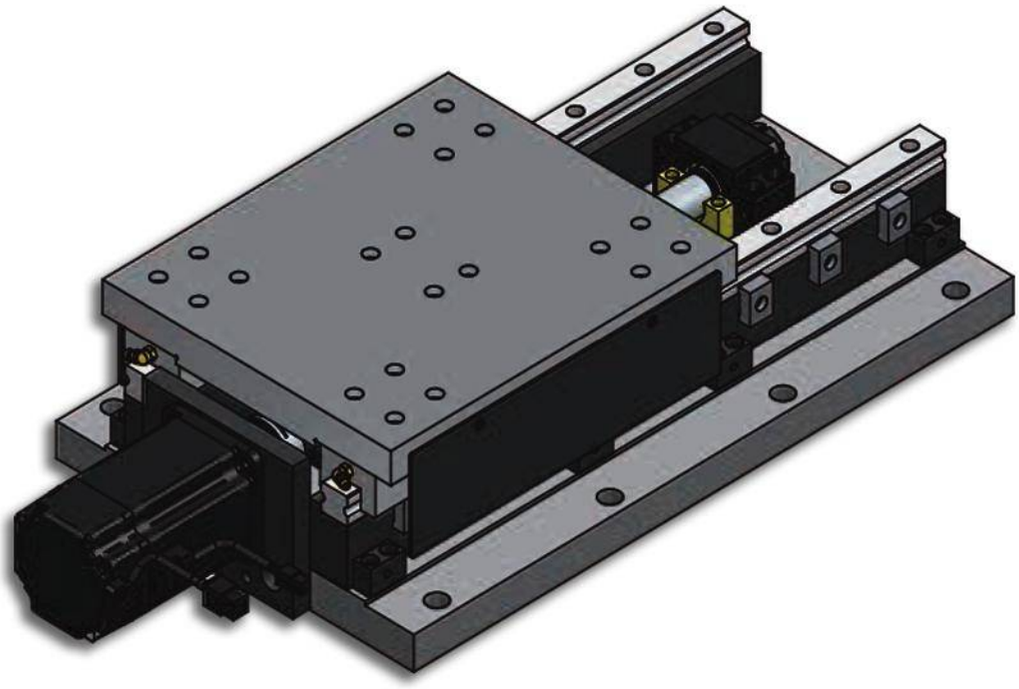

Characteristics & Dimenisions

MODEL	RHE250-520L
Sliding Table Dimensions	***250.00 x 300.00***
Dimensions Of Sliding Bench	***250.00 x 520.00***
Maximum Slide Stroke	***200.00***
Ball Screw Tipe	***Ø25 x 5 x C7***
Lineality	***25.00***
Maximum Slide Stroke *(Kg)*	***250.00***

*** **C5** & **C3** Grade Ball Screw abailable upon customer request.*
**** Servo Motor Base, Coupling and Telescopic Steel Covers are included as standard accessories.*
***** All dimensions are given in millimeters.*

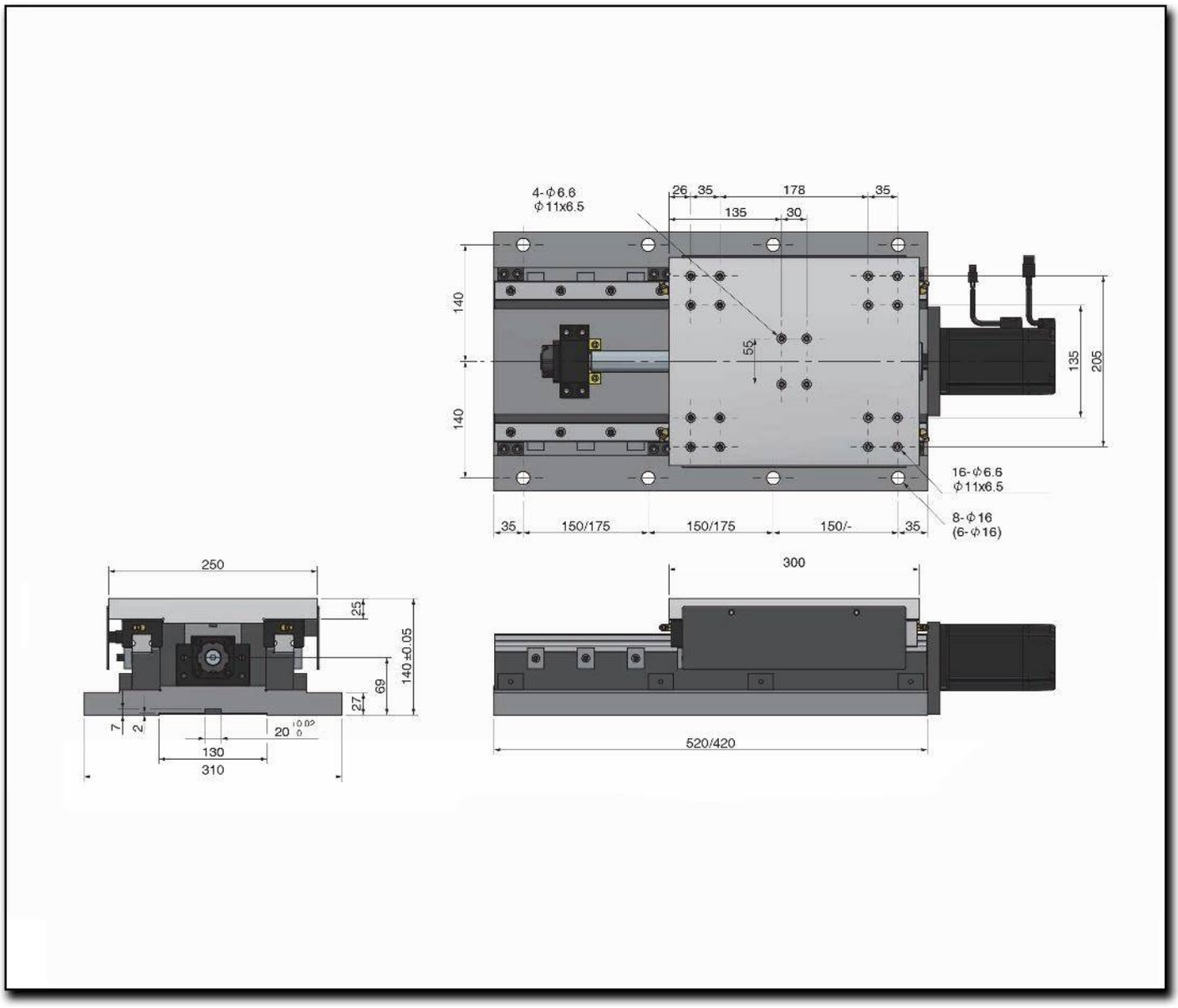
4-Φ6.6
Φ11x6.5
26
35
178
35
135
30
140
55
140
135
205
16-Φ6.6
Φ11x6.5
8-Φ16
(6-Φ16)
35
150/175
150/175
150/-
35
250
25
140 ±0.05
69
27
7
2
20
130
310
300
520/420

RHE300-420L

Servo Slides With Linear Guides And Ball Screw

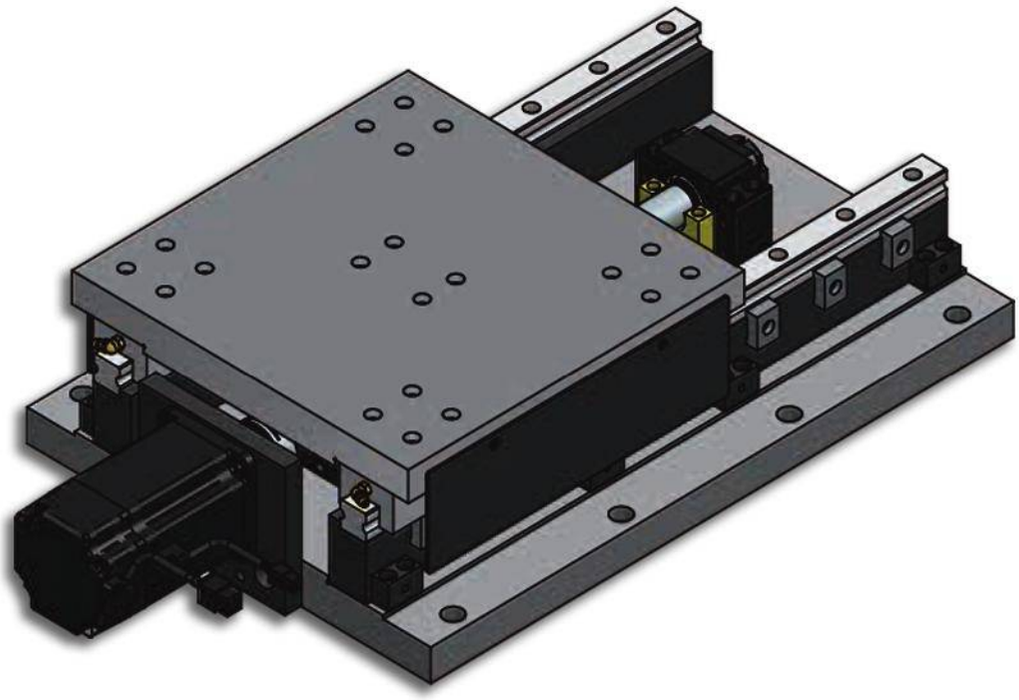

Characteristics & Dimenisions

MODEL	RHE300-420L
Sliding Table Dimensions	*300.00 x 300.00*
Dimensions Of Sliding Bench	*300.00 x 420.00*
Maximum Slide Stroke	*100.00*
Ball Screw Tipe	*Ø25 x 5 x C7*
Lineality	*25.00*
Maximum Slide Stroke *(Kg)*	*350.00*

*** **C5** & **C3** Grade Ball Screw aboilable upon customer request.*
**** Servo Motor Base, Coupling and Telescopic Steel Covers are included as standard accessories.*
***** All dimensions are given in millimeters.*

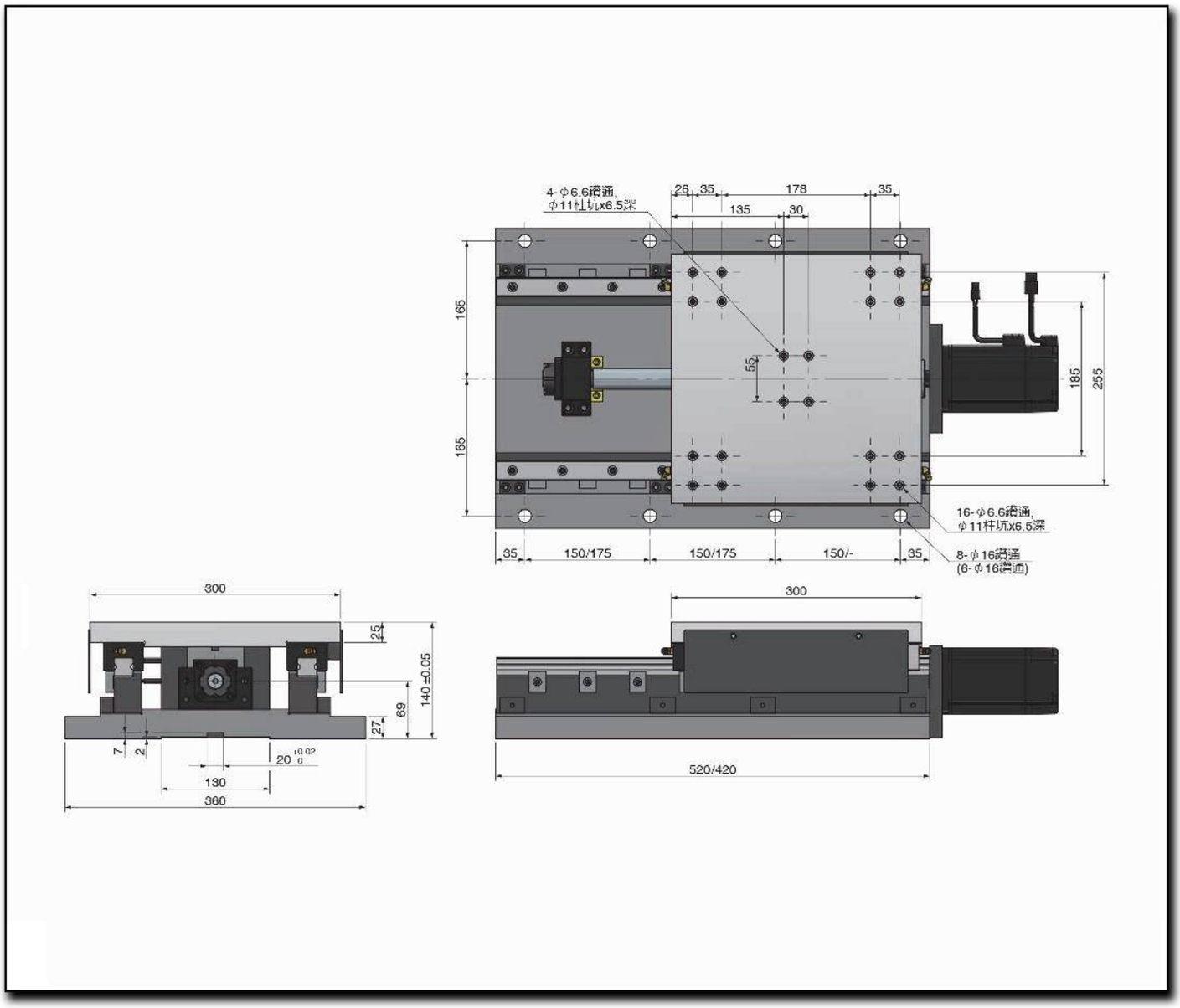
4-φ6.6通孔,
φ11柱坑x6.5深
26
35
178
35
135
30
165
165
55
185
255
16-φ6.6通孔,
φ11柱坑x6.5深
8-φ16通孔
(6-φ16通孔)
35
150/175
150/175
150/-
35
300
25
140±0.05
69
27
7
2
20
130
360
300
520/420

RHE300-520L

Servo Slides With Linear Guides And Ball Screw

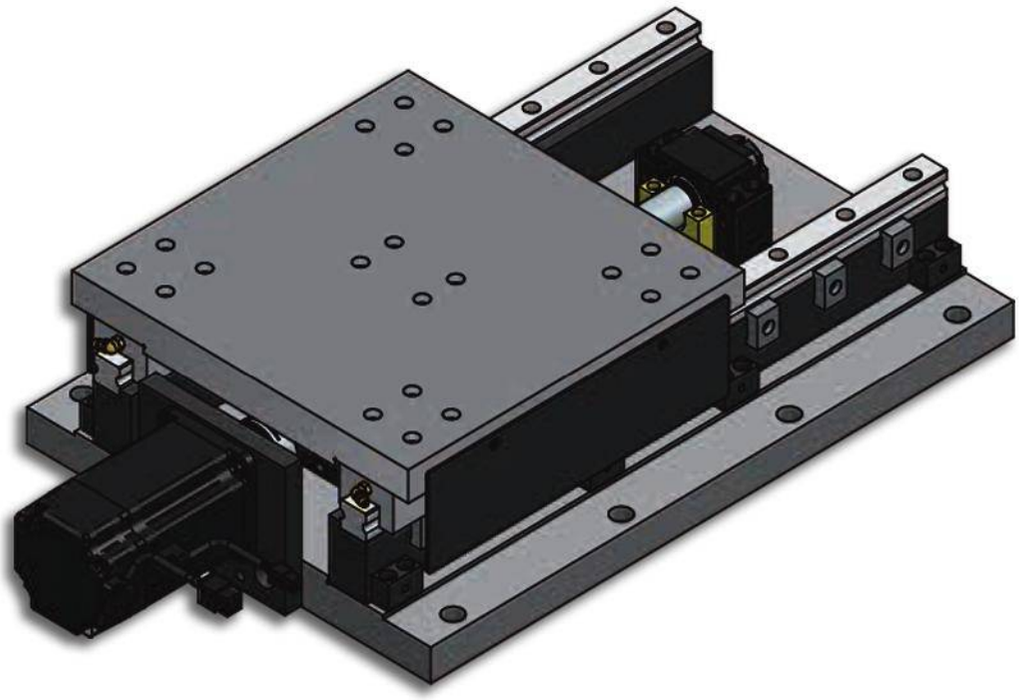

Characteristics & Dimenisions

MODEL	RHE300-520L
Sliding Table Dimensions	***300.00 x 300.00***
Dimensions Of Sliding Bench	***300.00 x 520.00***
Maximum Slide Stroke	***200.00***
Ball Screw Tipe	***Ø25 x 5 x C7***
Lineality	***25.00***
Maximum Slide Stroke *(Kg)*	***350.00***

*** **C5** & **C3** Grade Ball Screw aboilable upon customer request.*
**** Servo Motor Base, Coupling and Telescopic Steel Covers are included as standard accessories.*
***** All dimensions are given in millimeters.*

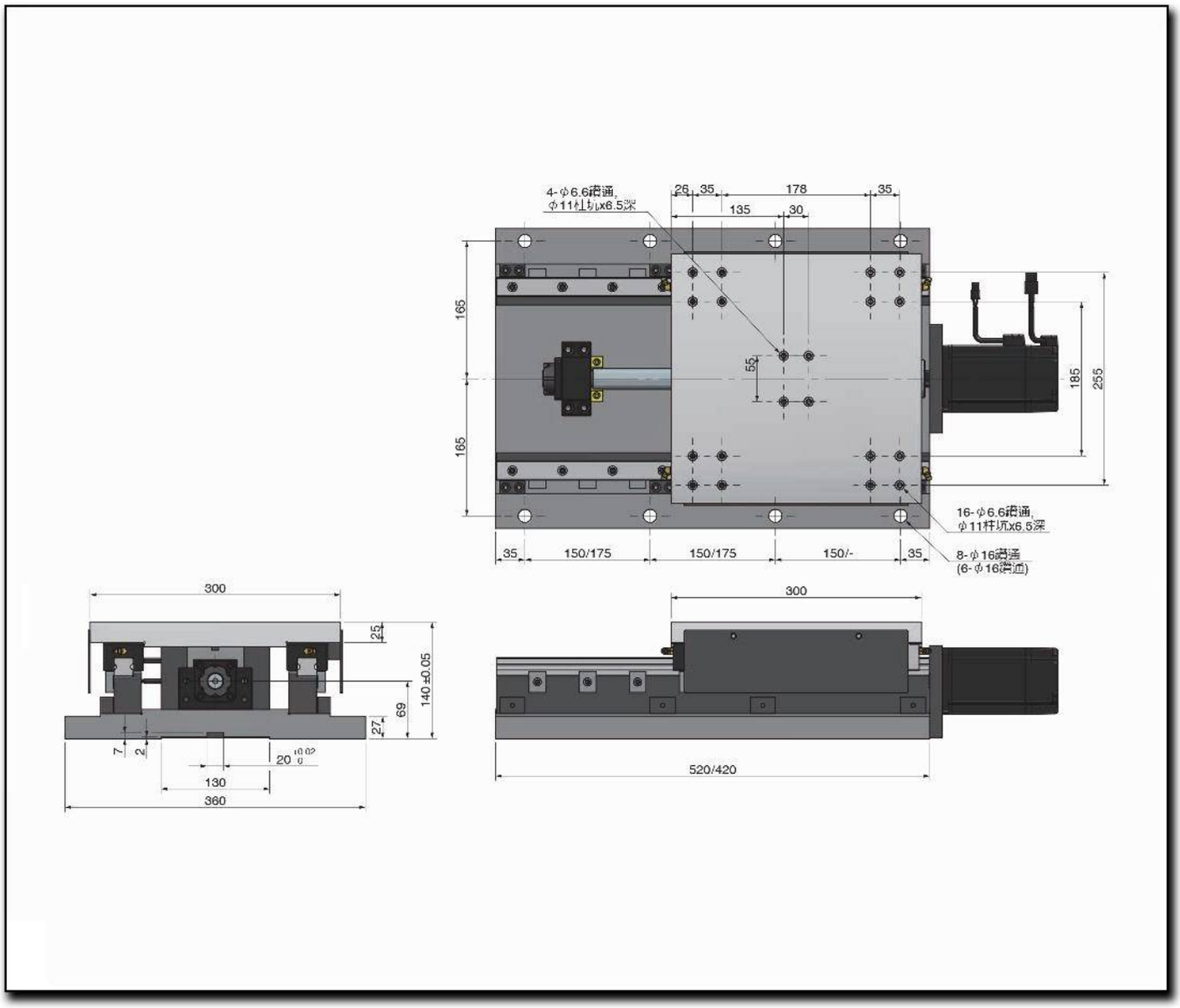
4-φ6.6通孔,
φ11柱坑x6.5深
26
35
178
35
135
30
165
165
55
185
255
16-φ6.6通孔,
φ11柱坑x6.5深
8-φ16通孔
(6-φ16通孔)
35
150/175
150/175
150/-
35
300
25
140±0.05
69
27
7
2
20
130
360
300
520/420

S SERIES

BORING/MILLING SPINDLE HEAD
(SQUARE HOUSING)

S25
Boring/Milling Spindle Head
(Machinig Process Unit)



S25-ER20-MF

TOTAL WEIGHT	18 kg

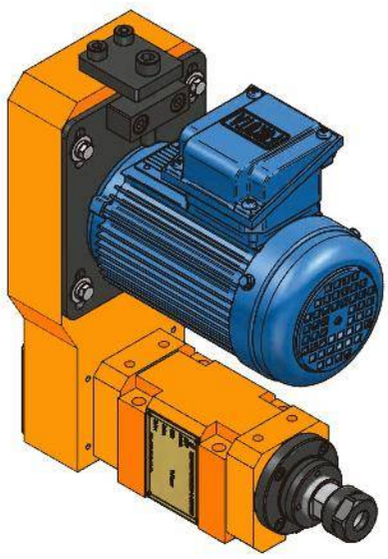

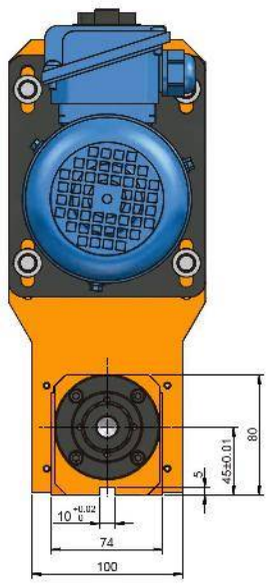

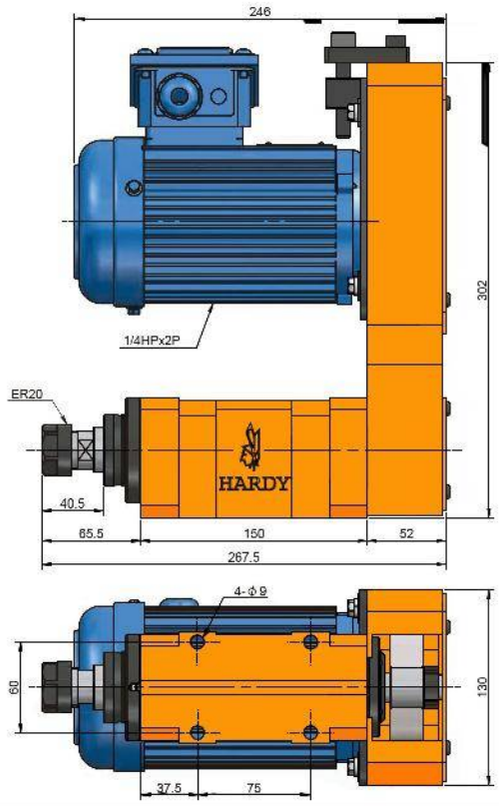

S25-ER20

TOTAL WEIGHT	6 Kg

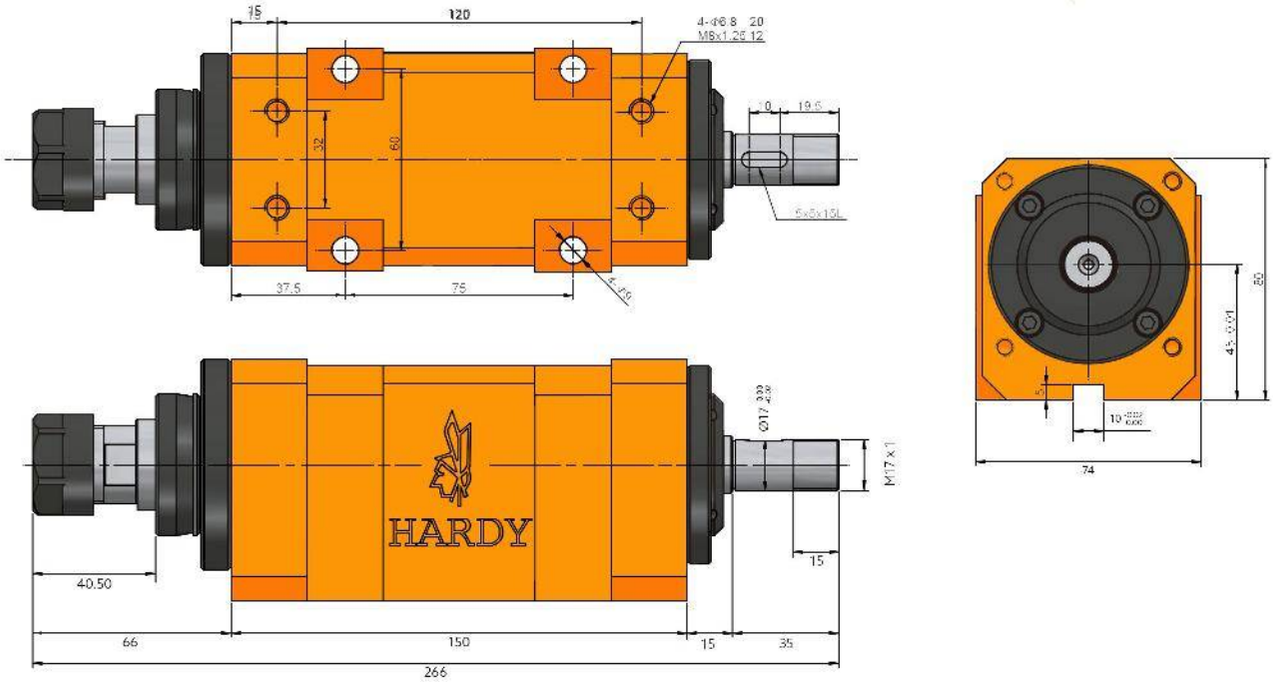

Characteristics & Dimensions

MODEL	S25
Spindle Model	*ER20*
Maximum Speed	*4,000*
Bearings Model	*32005 / 6005Z* *32004 / 6004Z*
Maximum Power	*Within ½ H.p.*
Raising Temperature	*Within 20°C*

**** Roundness: Within 0.003 millimeters.*
***** All dimensions are given in millimeters.*

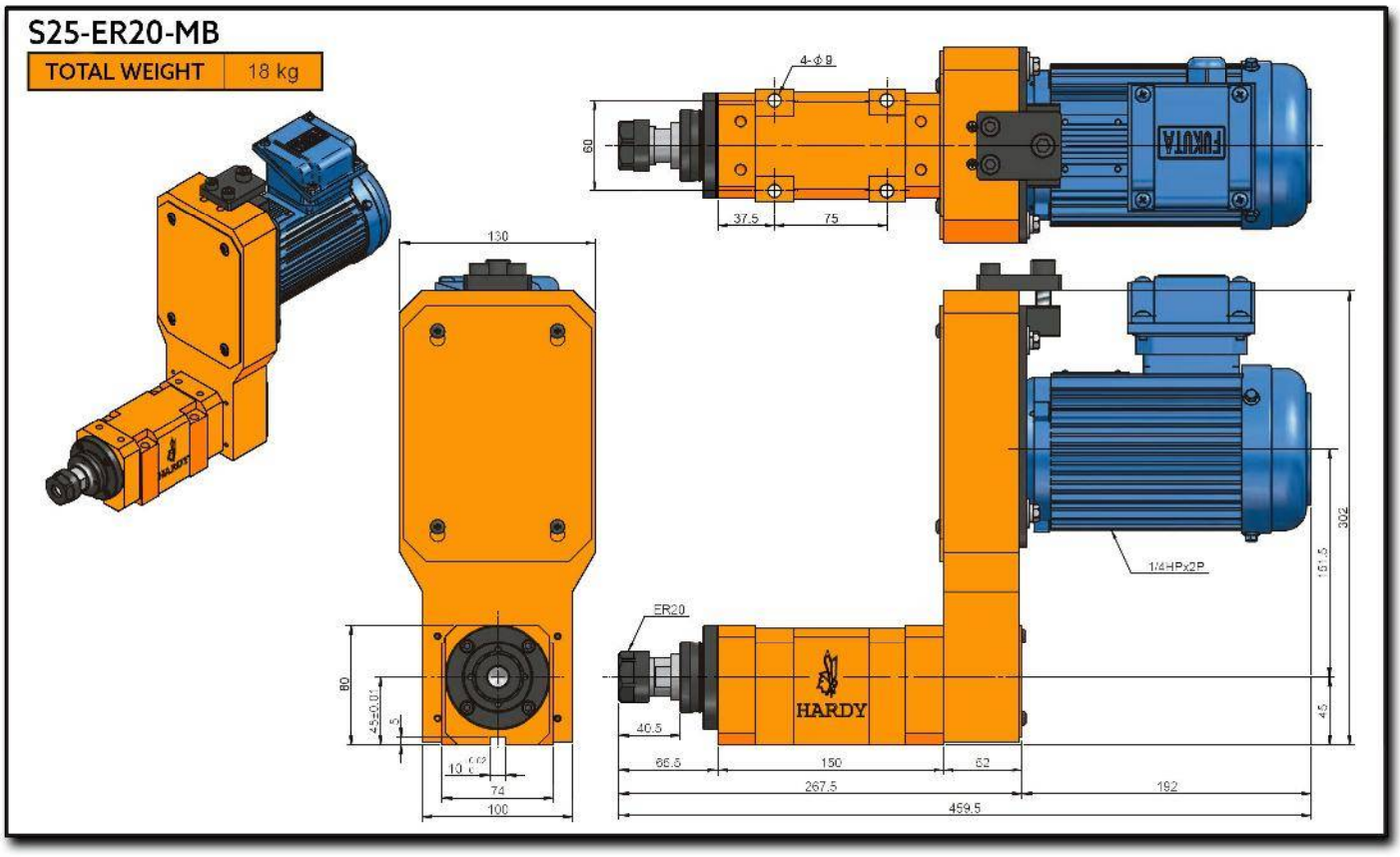
S25-ER20-MB
TOTAL WEIGHT
18 kg
4-ϕ 8
60
37.5
75
130
80
45±0.01
5
10
74
100
ER20
HARDY
40.5
66.5
150
62
267.5
192
459.5
1/4HPx2P
302
151.5
45

S25H

High Performance Boring/Milling Spindle Head

(Machinig Process Unit)



S25H-ER20

TOTAL WEIGHT	6 kg

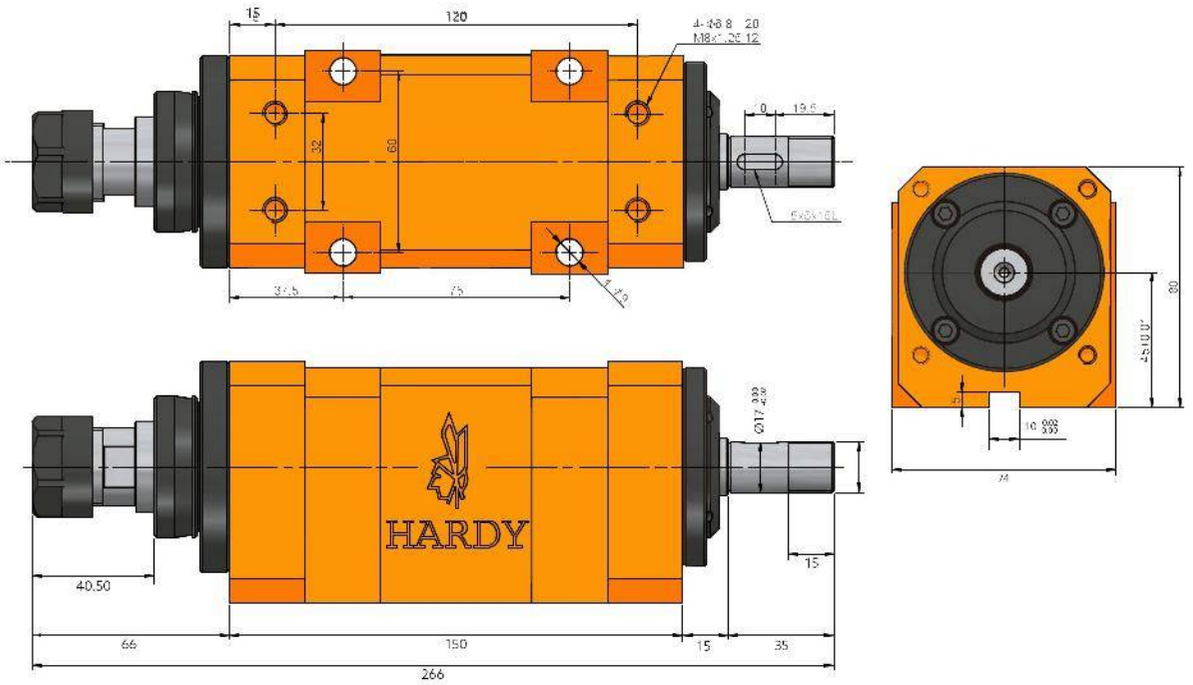

Characteristics & Dimensions

MODEL	S25H
Spindle Model	*ER20*
Maximum Speed	*12,000*
Bearings Model	*7005 x 2* *7004 x 2*
Maximum Power	*Within ½ H.p.*
Raising Temperature	*Within 20°C*

**** Roundness: Within 0.003 millimeters.*
***** All dimensions are given in millimeters.*

S25H-ER20-MB

TOTAL WEIGHT	18 kg

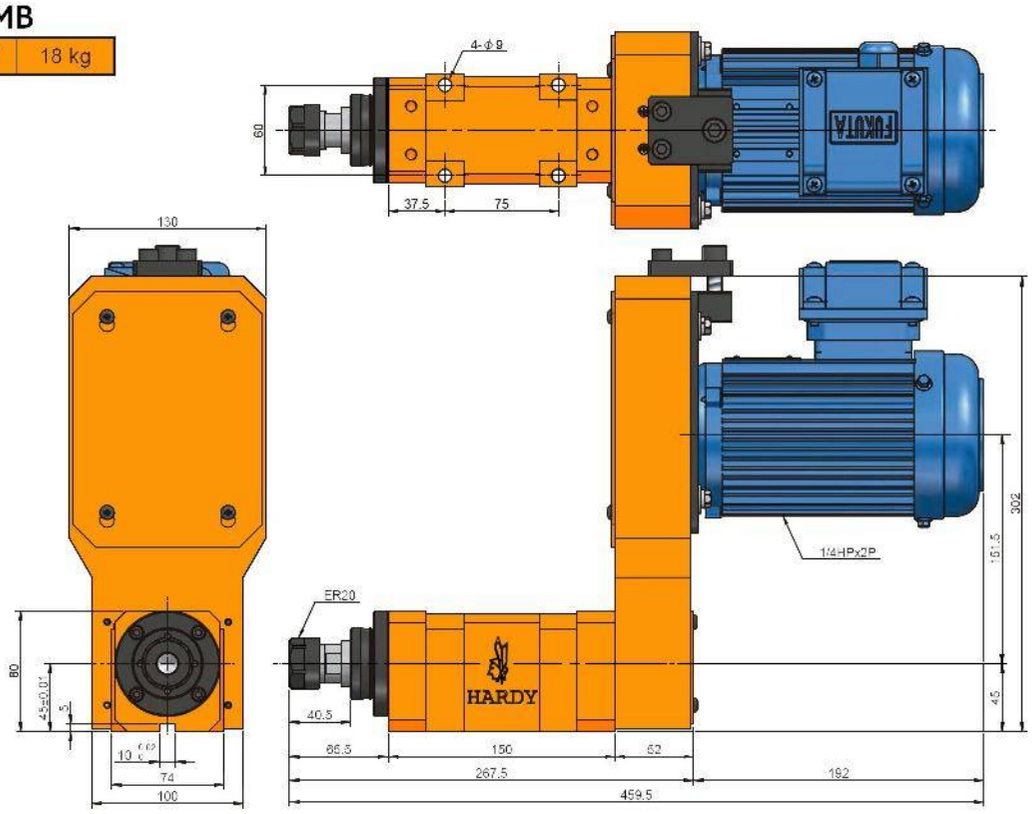

S25H-ER20-MF

TOTAL WEIGHT	18 kg

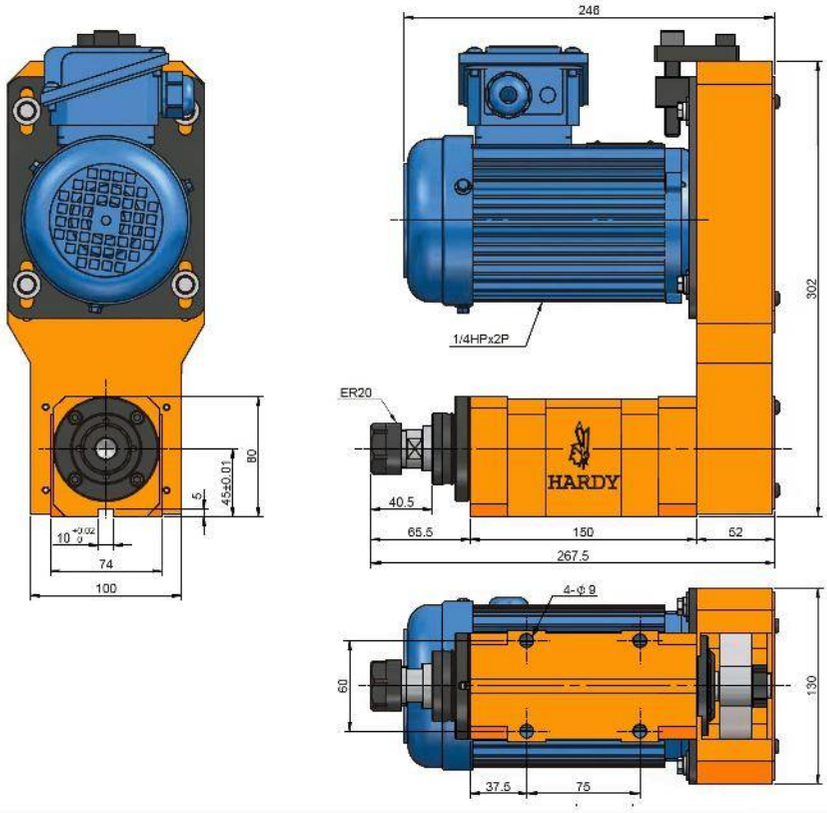

S35

Boring/Milling Spindle Head

(Machinig Process Unit)

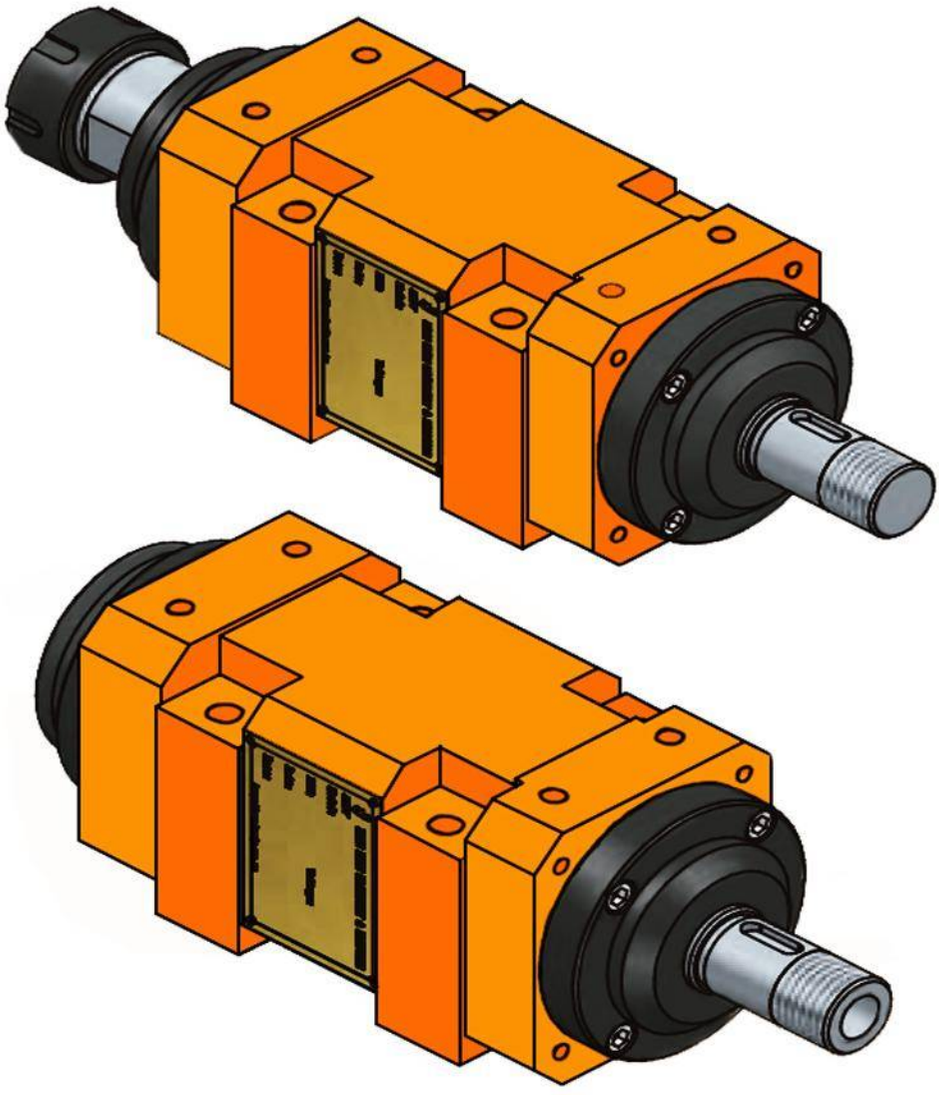

S35-ER32

Peso Total	9 kg

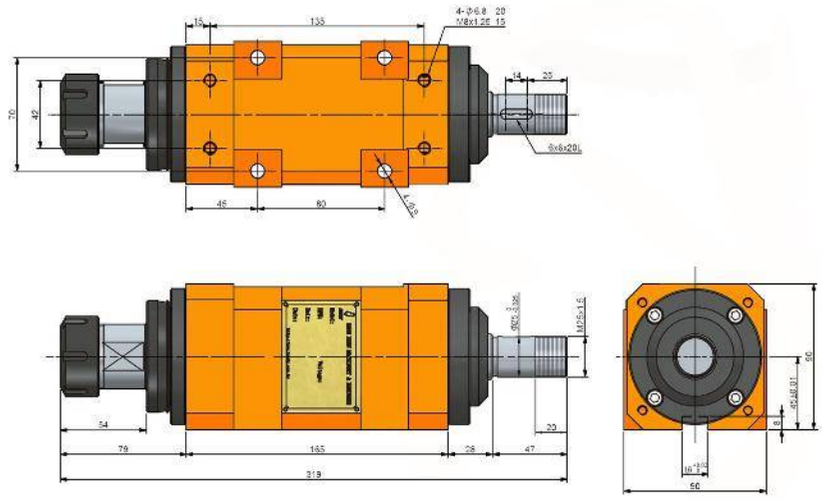

S35-MT3

TOTAL WEIGHT	9 kg

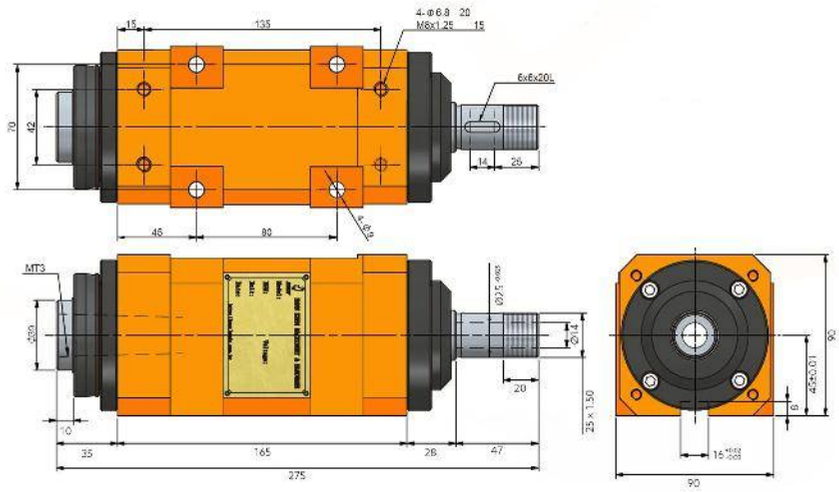

Characteristics & Dimensions

MODEL	S35
Spindle Model	*MT3 - ER32*
Maximum Speed	*3,000*
Bearings Model	*32007 / 6007Z* *32006 / 6006Z*
Maximum Power	*Within 1 H.p.*
Raising Temperature	*Within 20°C*

**** Roundness: Within 0.003 millimeters.*
***** All dimensions are given in millimeters.*

S35-ER32-MF
S35-MT-MF

TOTAL WEIGHT	30 Kg

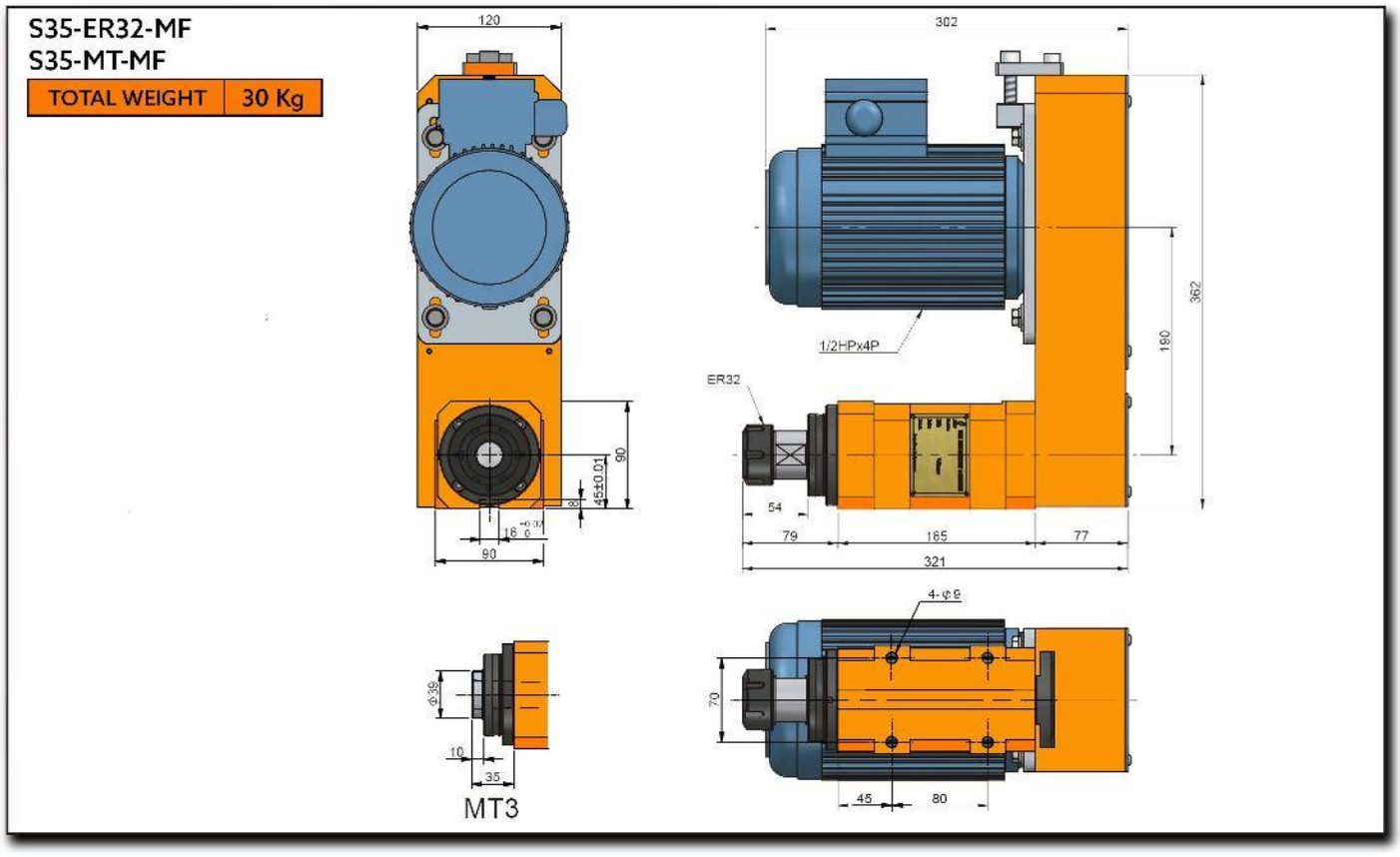

S35-ER32-MB
S35-MT-MB

TOTAL WEIGHT	30 Kg

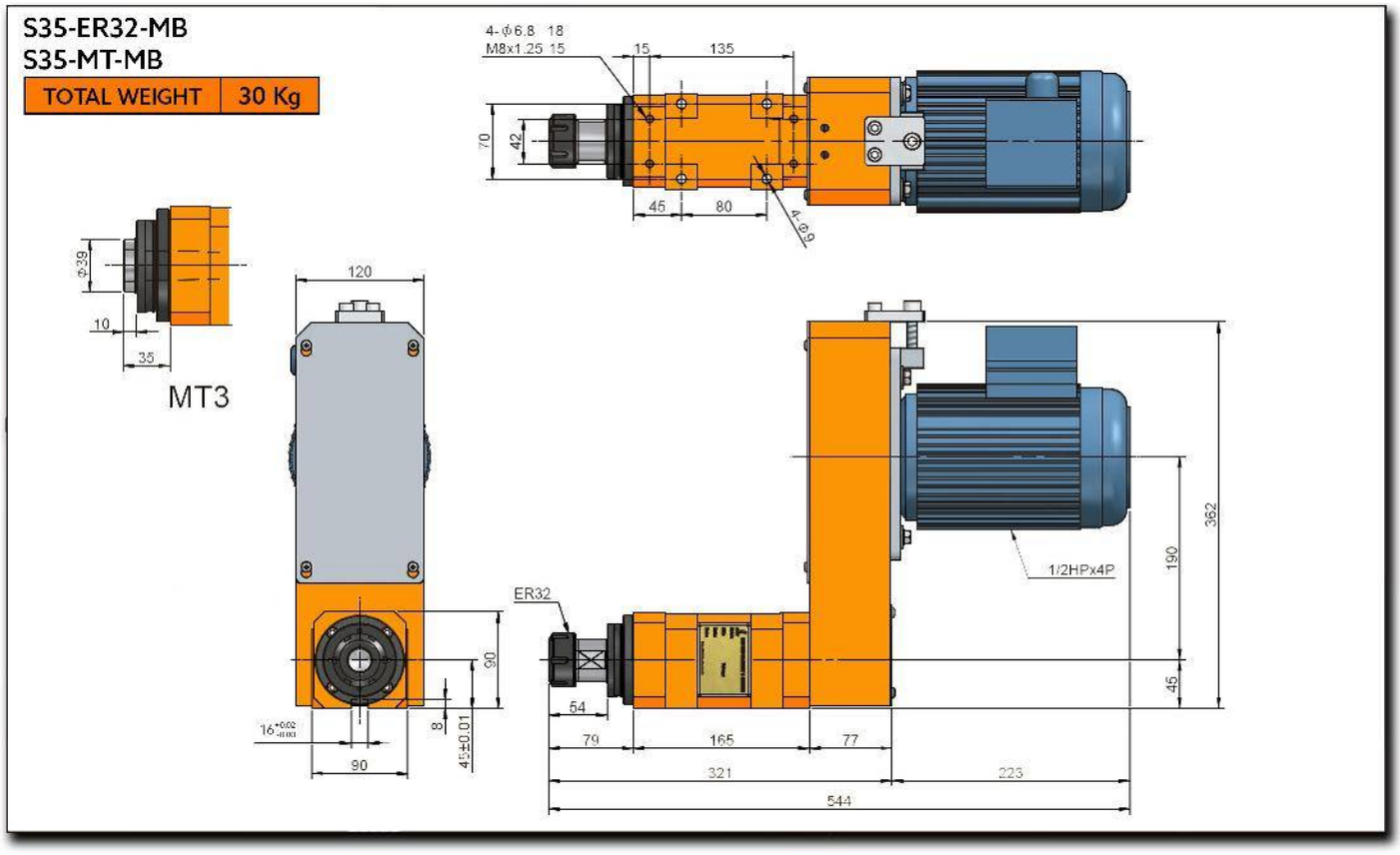

S35H

High Performance Boring/Milling Spindle Head

(Machinig Process Unit)

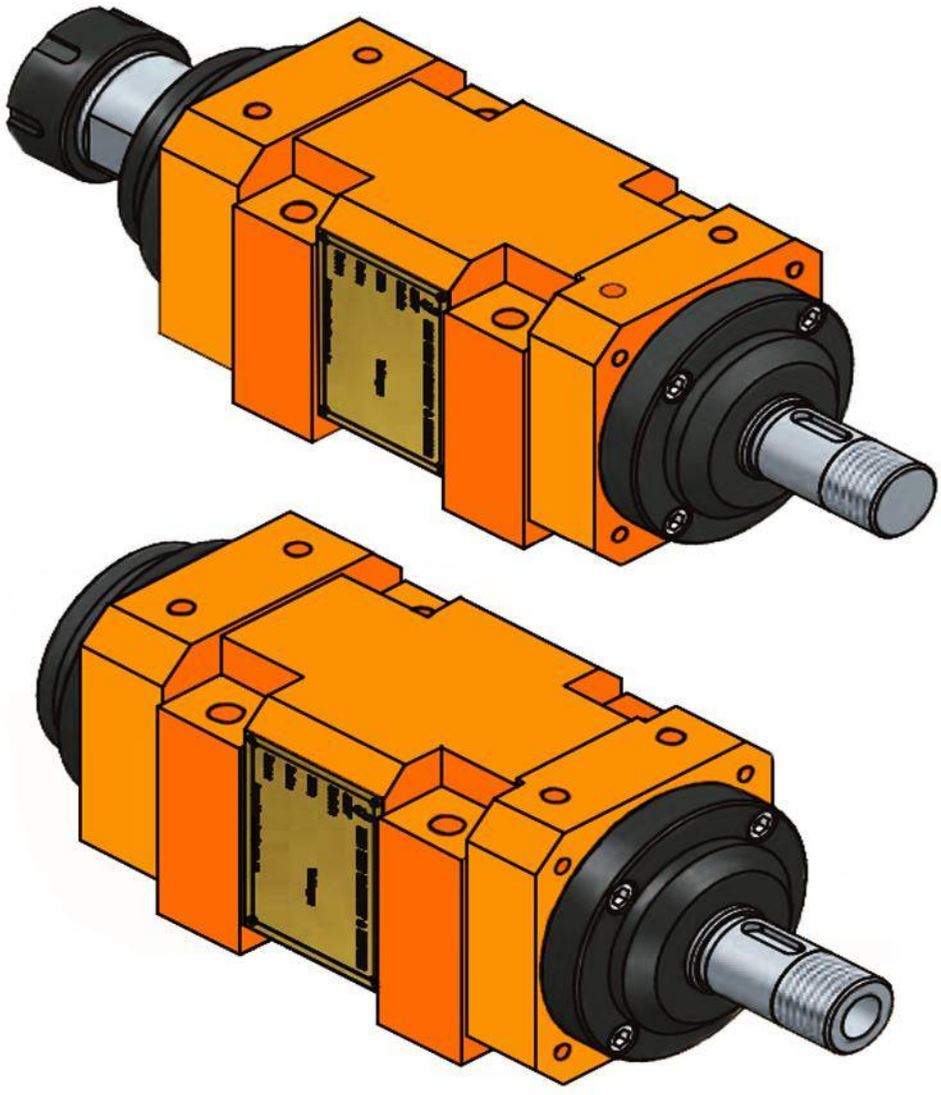

S35H-ER32

TOTAL WEIGHT	9 kg

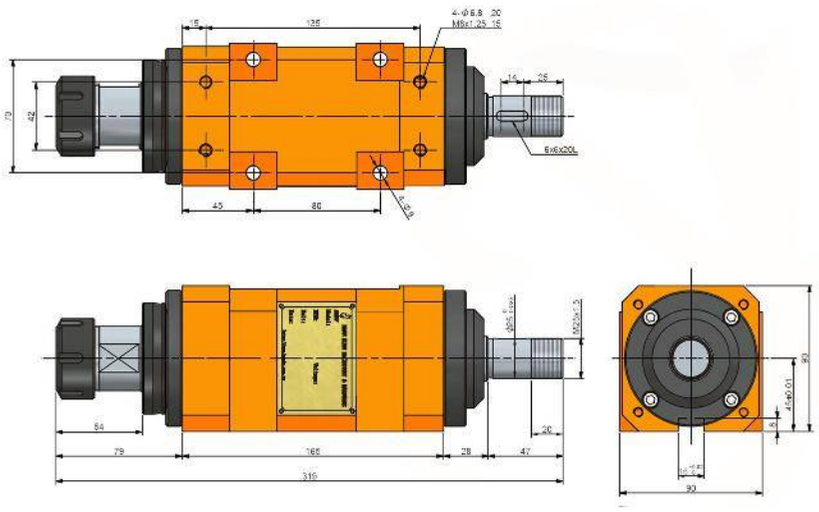

Characteristics & Dimensions

MODEL	S35H
Spindle Model	*MT3 - ER32*
Maximum Speed	*10,000*
Bearings Model	*7007 x 2* *7006 x 2*
Maximum Power	*Within 1 H.p.*
Raising Temperature	*Within 20°C*

**** Roundness: Within 0.003 millimeters.*
***** All dimensions are given in millimeters.*

S35H-MT3

TOTAL WEIGHT	9 kg

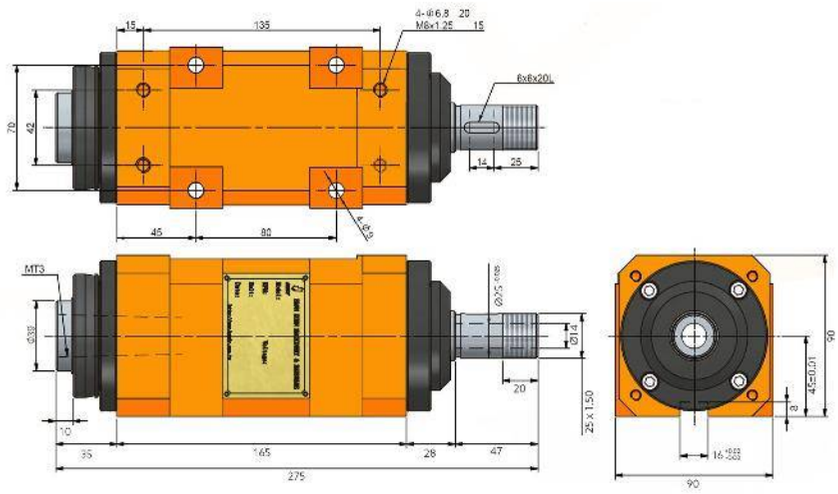

S35H-ER32-MF
S35H-MT-MF

TOTAL WEIGHT	30 Kg

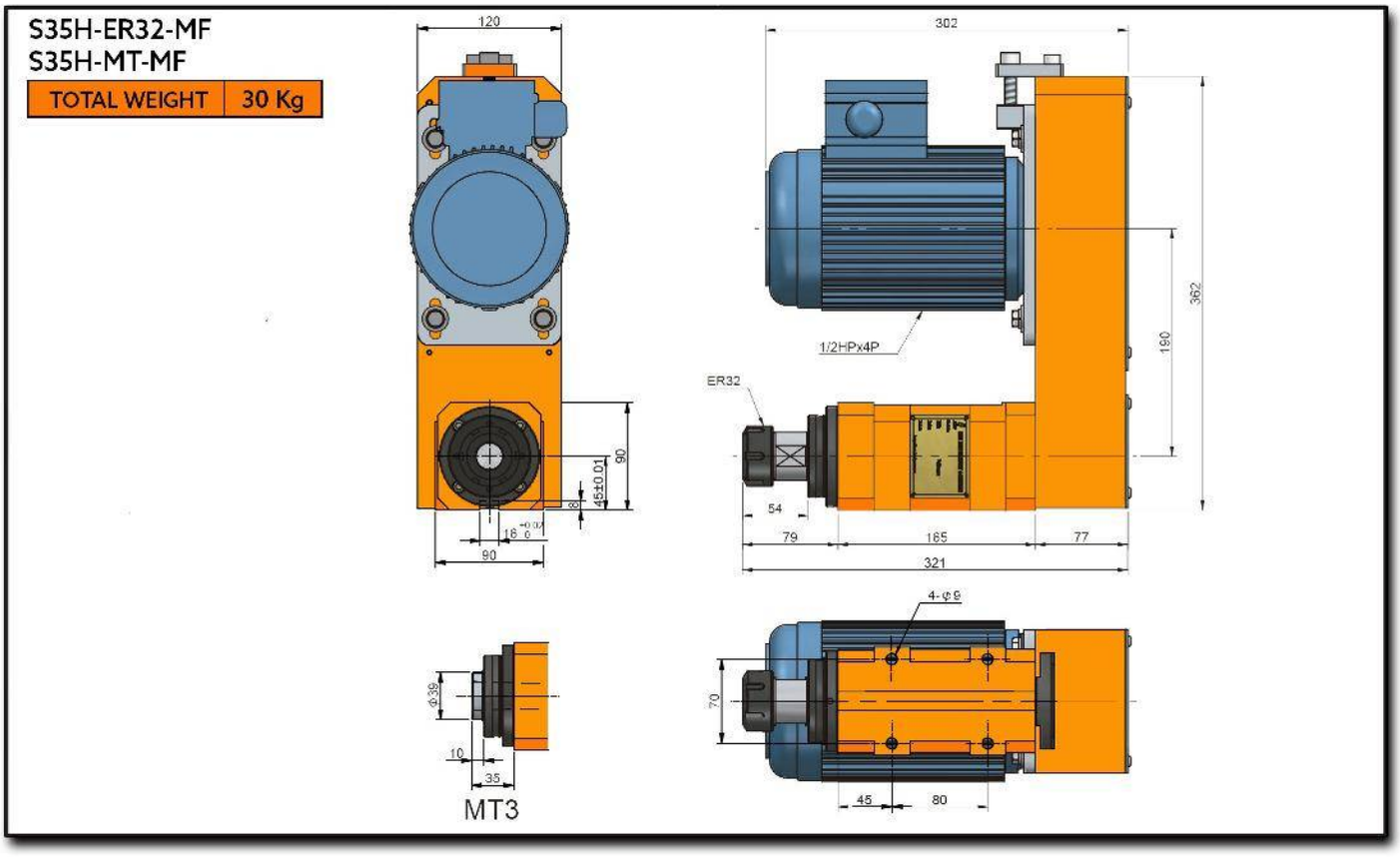

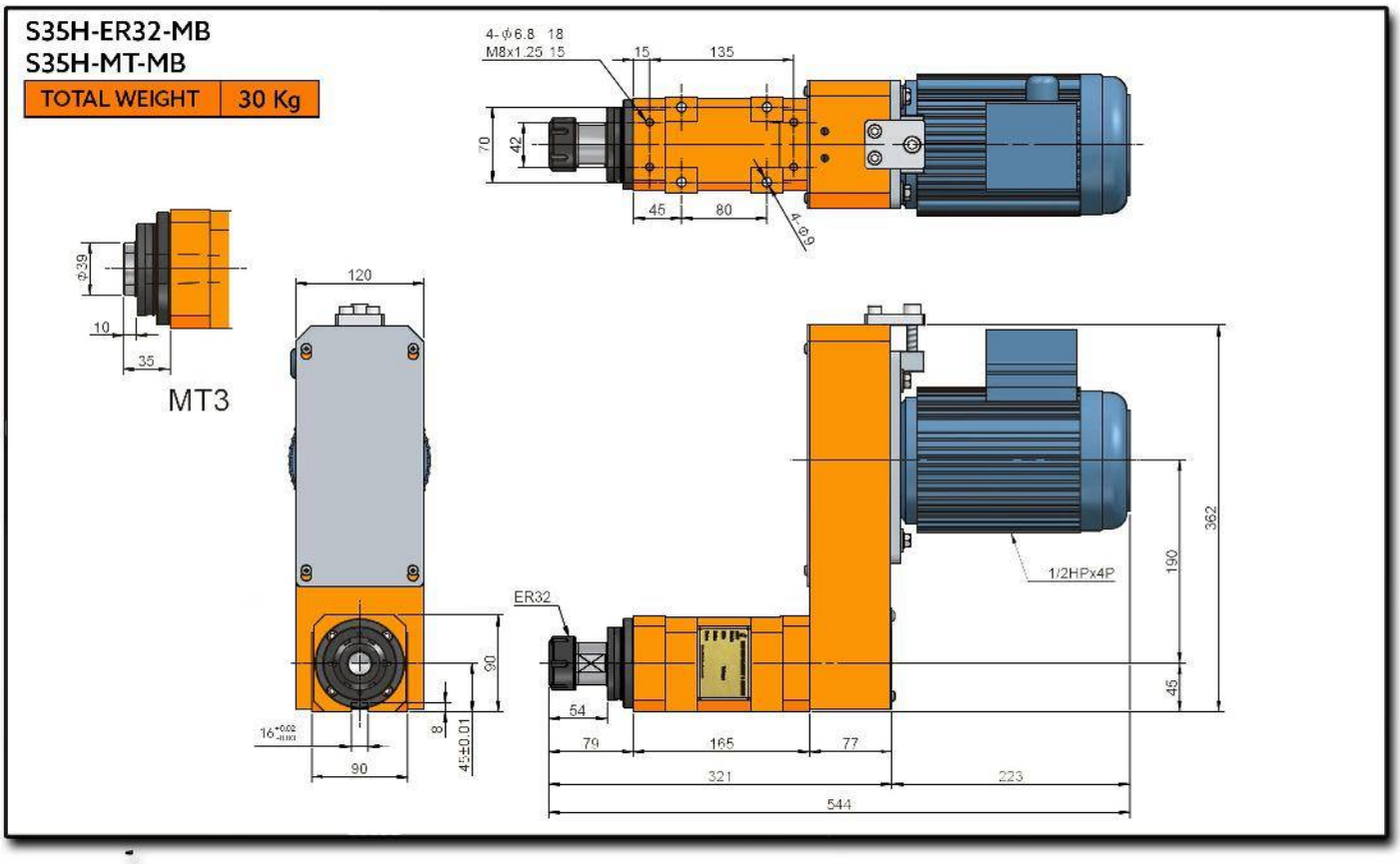
S35H-ER32-MB
S35H-MT-MB
TOTAL WEIGHT
30 Kg
4-φ6.8 18
M8x1.25 15
15
135
70
42
45
80
4-Φ9
Φ39
10
35
MT3
120
ER32
1/2HPx4P
362
190
45
90
8
45±0.01
90
54
79
165
77
321
223
544

S45

Boring/Milling Spindle Head

(Machinig Process Unit)

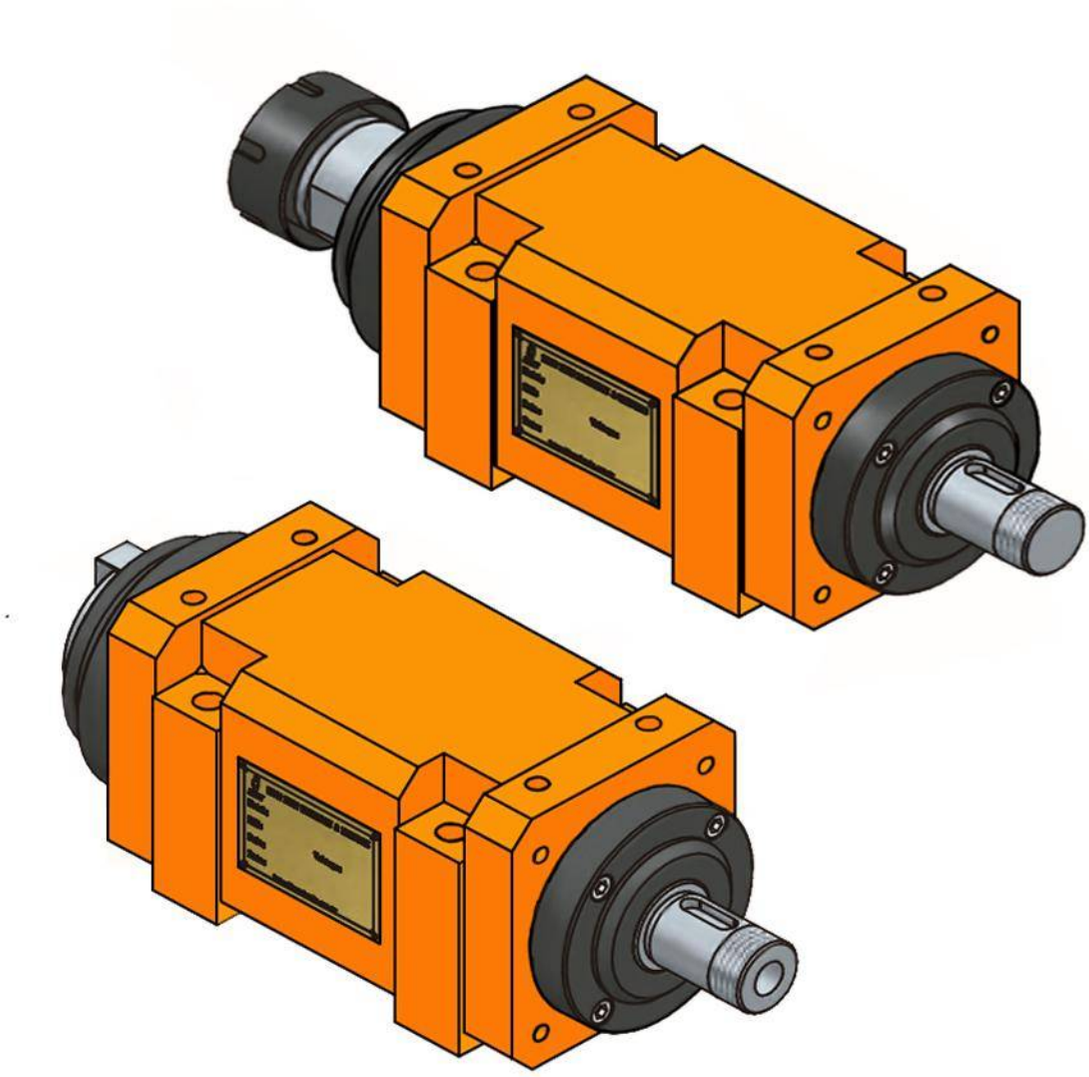

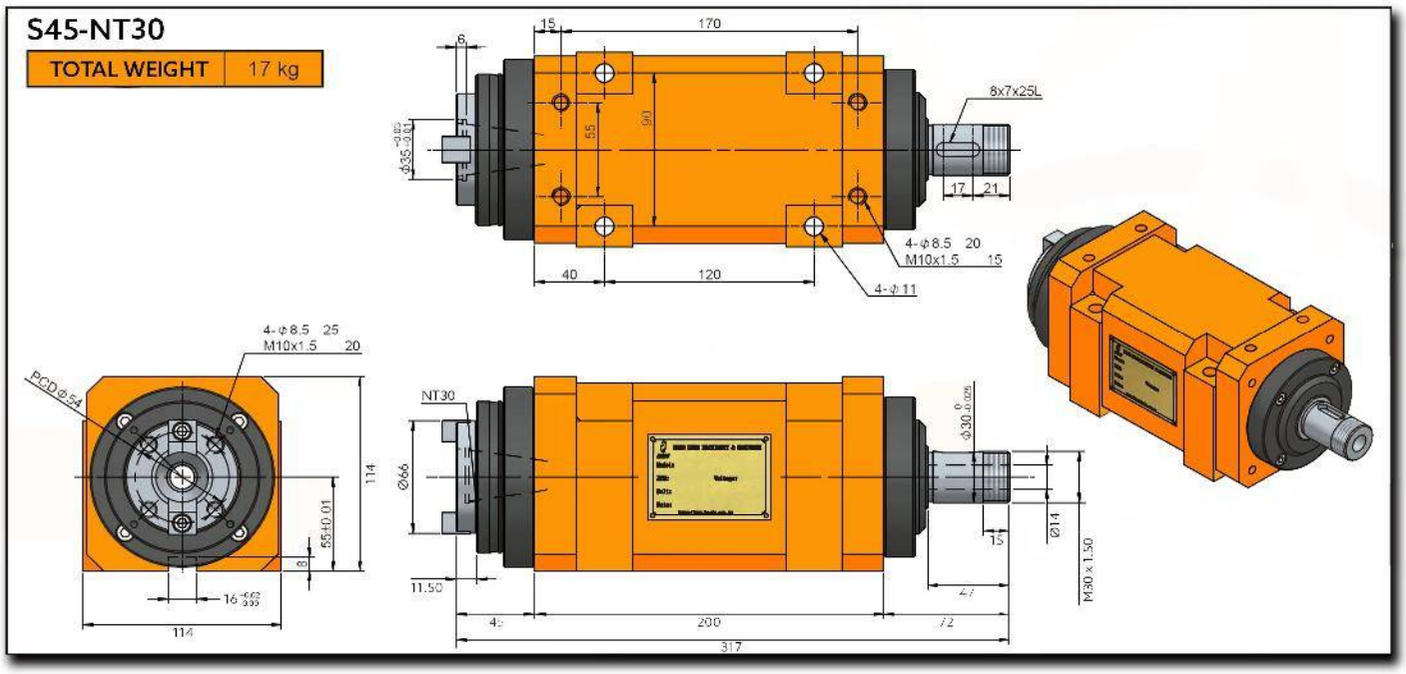
S45-NT30
TOTAL WEIGHT
17 kg
8x7x25L
4-Φ8.5 20
M10x1.5 15
4-Φ11
4-Φ8.5 25
M10x1.5 20
PCD Φ54
NT30
Ø66
Ø14
M30 x 1.50
170
40
120
200
317
114

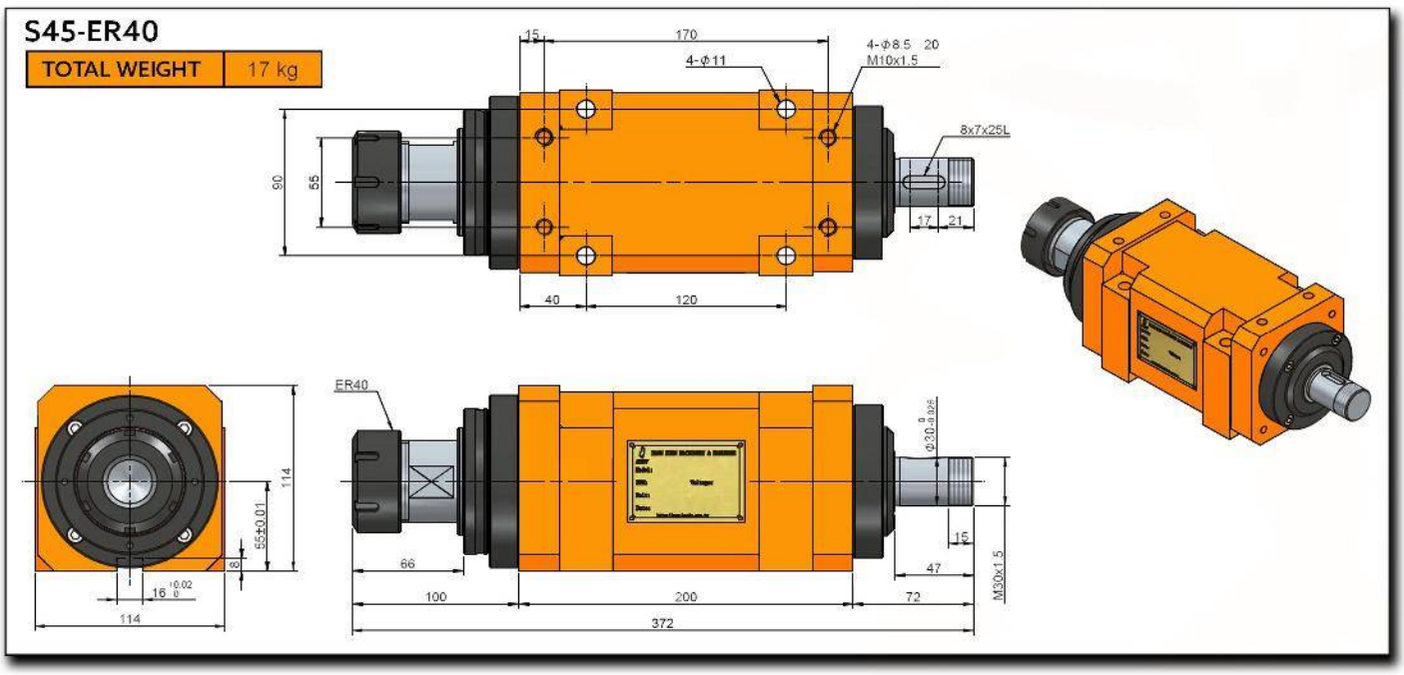
S45-ER40
TOTAL WEIGHT
17 kg
15
170
4-Φ11
4-Φ8.5 20
M10x1.5
8x7x25L
90
55
17
21
40
120
ER40
114
55±0.01
8
16
114
66
100
200
372
72
47
15
M30x1.5

Characteristics & Dimensions

MODEL	S45
Spindle Model	*NT30 - ER40*
Maximum Speed	*2,500*
Bearings Model	*32009 / 6009Z* *32008 / 6008Z*
Maximum Power	*Within 2 H.p.*
Raising Temperature	*Within 20°C*

**** Roundness: Within 0.003 millimeters.*
***** All dimensions are given in millimeters.*

S45-ER40-MB
S45-NT30-MB

TOTAL WEIGHT	45 kg

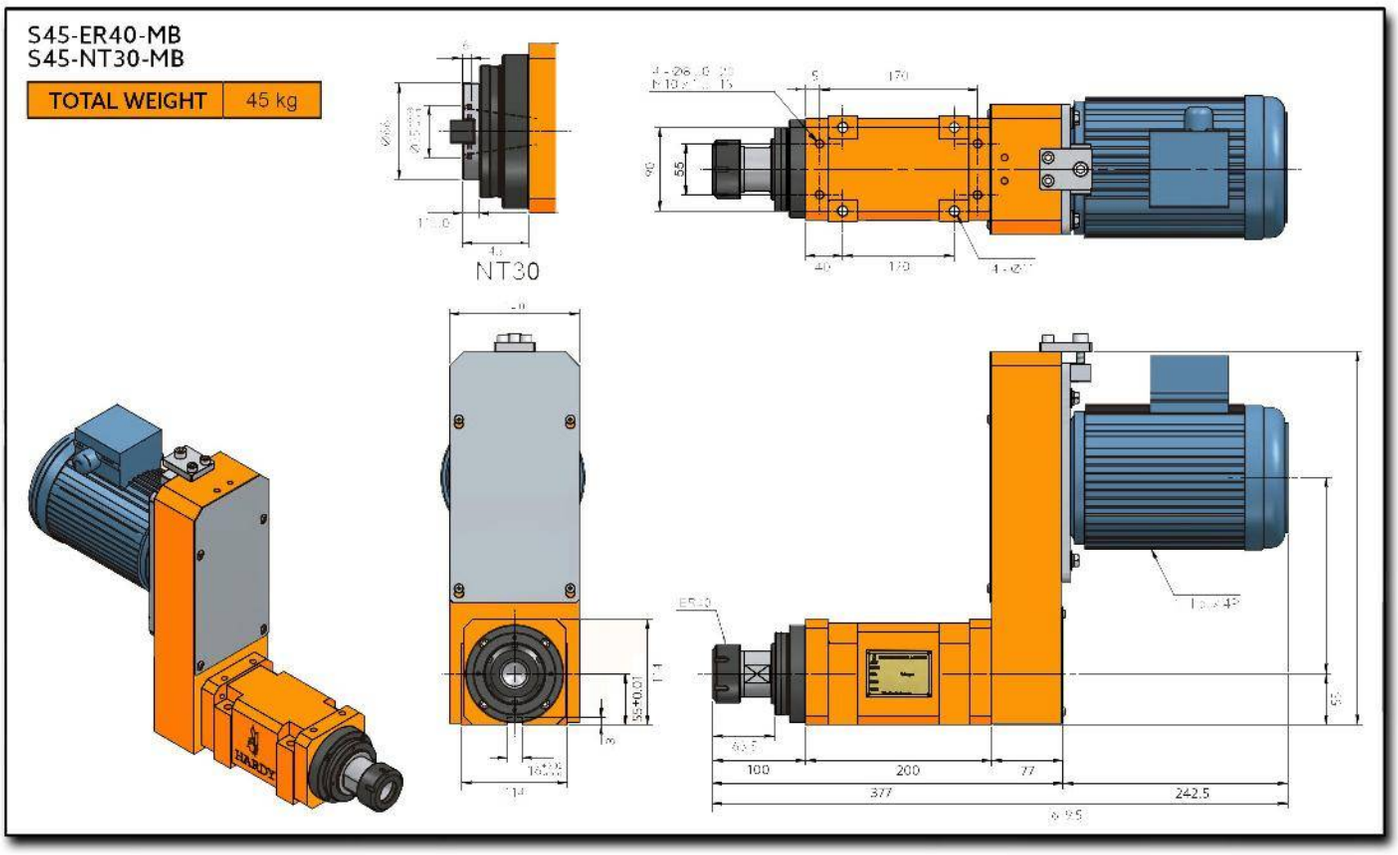

S45-ER40-MF
S45-NT30-MF

TOTAL WEIGHT	45 kg

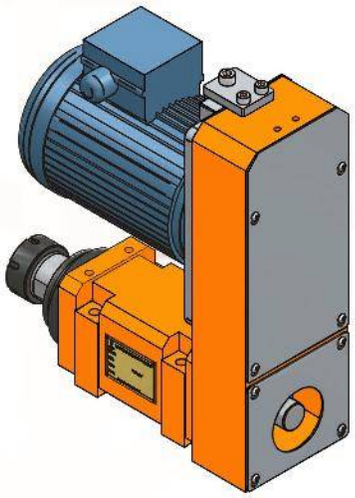

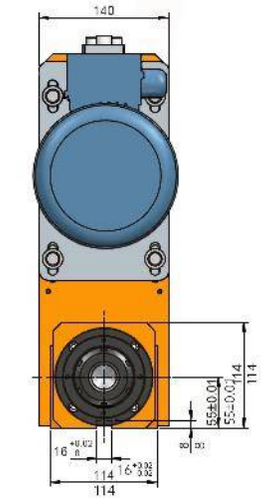

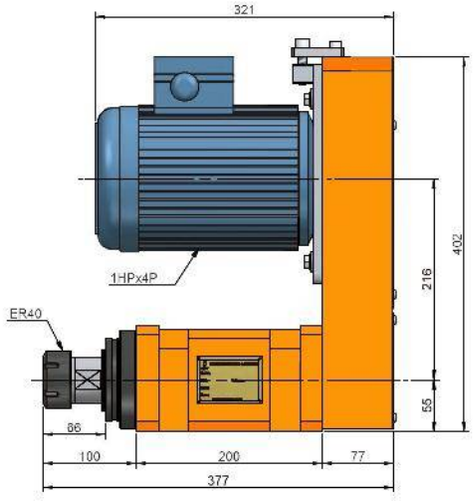

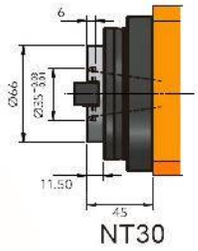

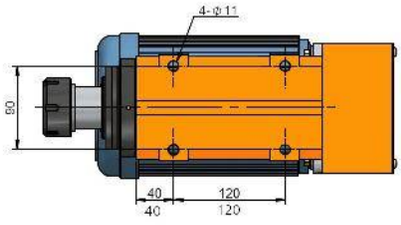

S45H

High Performance Boring/Milling Spindle Head

(Machinig Process Unit)

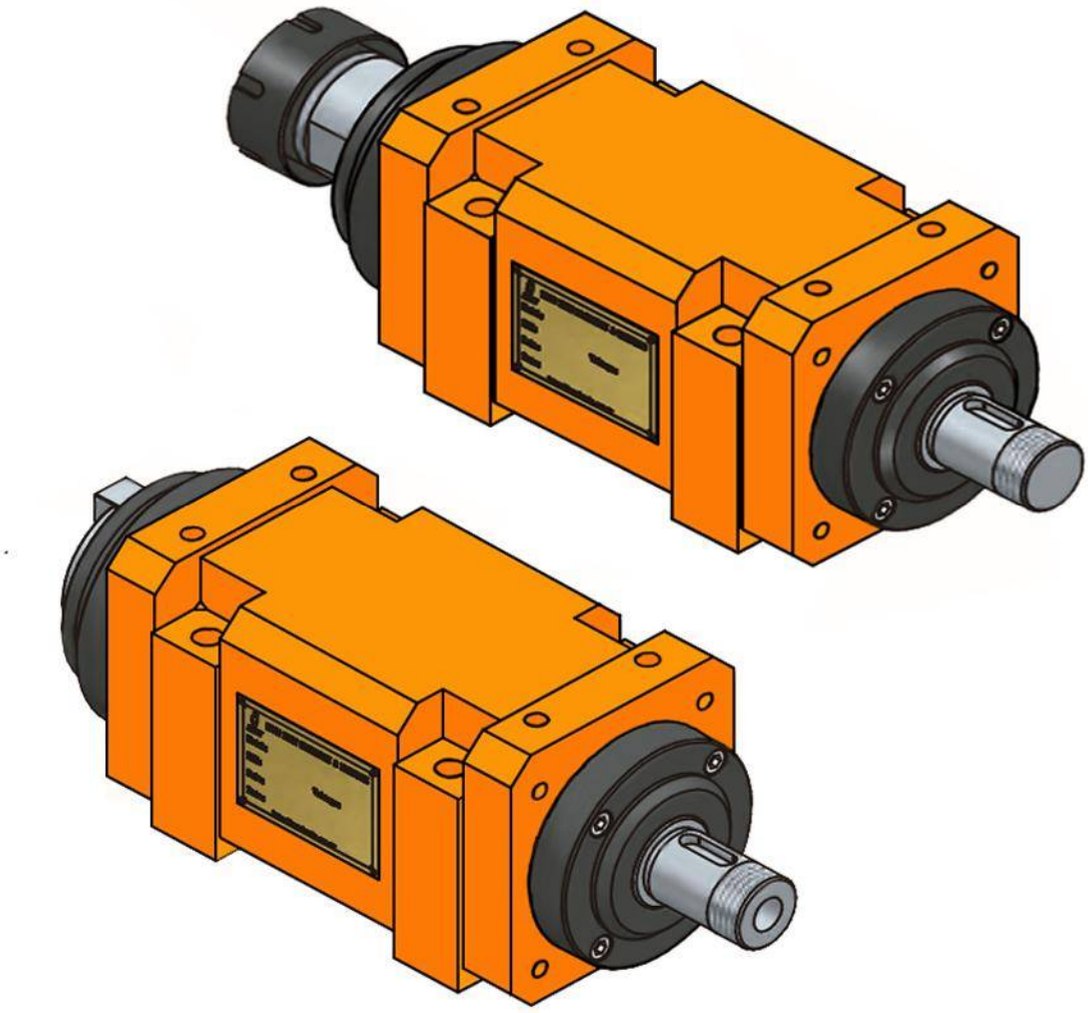

S45H-ER40

TOTAL WEIGHT	17 kg

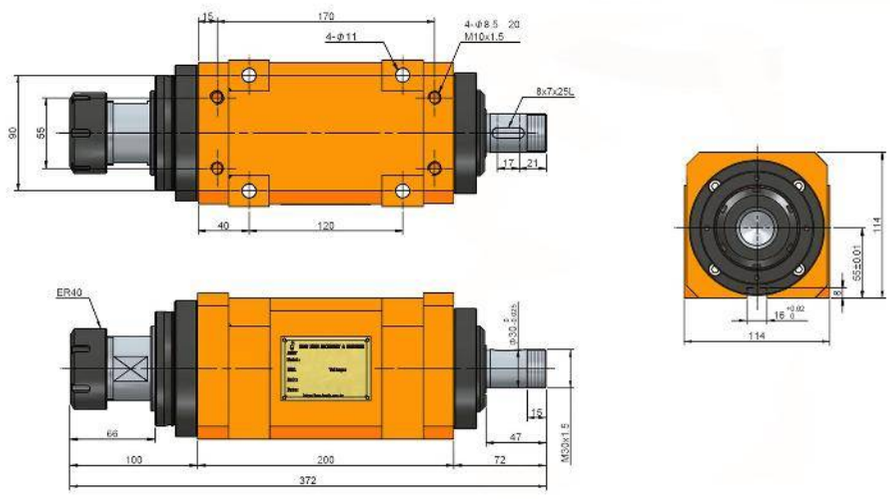

S45H-NT30

TOTAL WEIGHT	17 kg

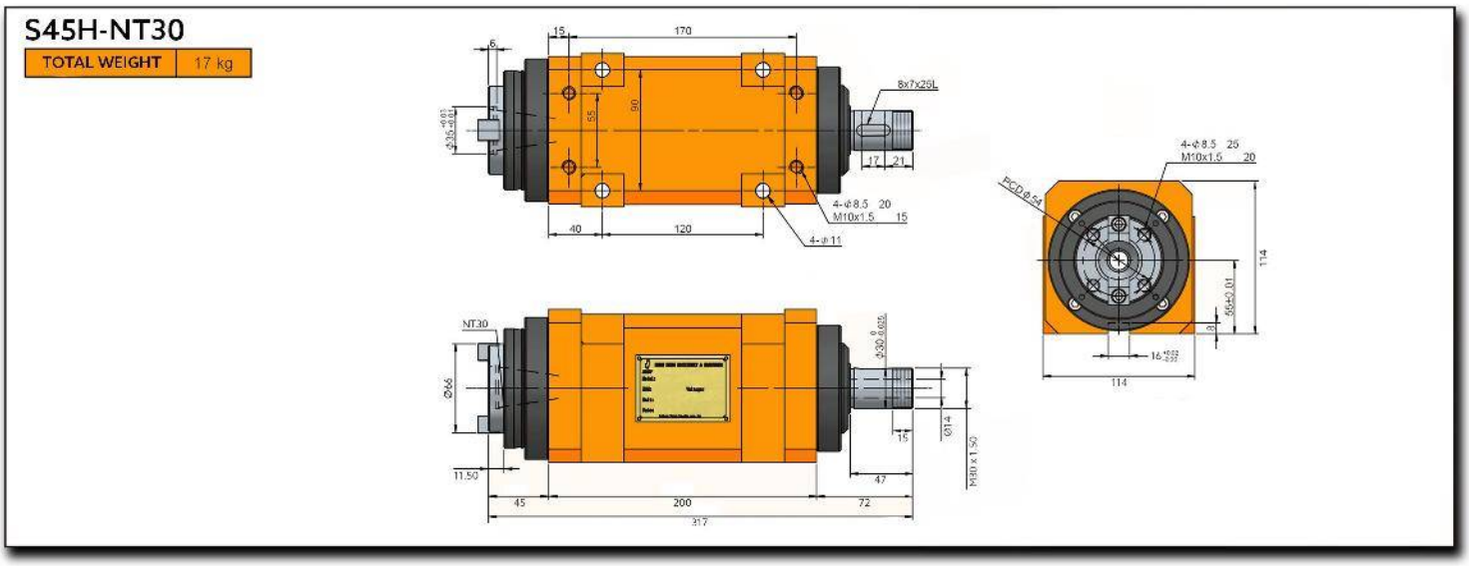

Characteristics & Dimensions

MODEL	S45H
Spindle Model	*NT30 - ER40*
Maximum Speed	*8,000*
Bearings Model	*7009 x 2* *7008 x 2*
Maximum Power	*Within 2 H.p.*
Raising Temperature	*Within 20°C*

**** Roundness: Within 0.003 millimeters.*
***** All dimensions are given in millimeters.*

S45H-ER40-MF
S45H-NT30-MF

TOTAL WEIGHT	45 kg

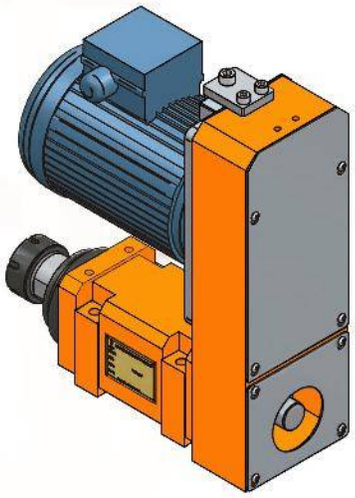

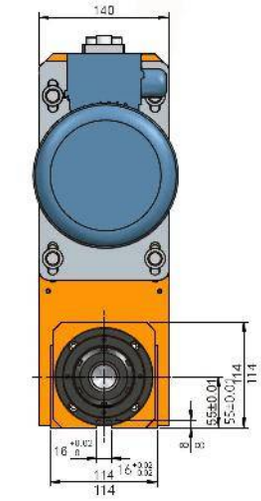

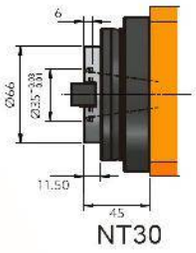

NT30

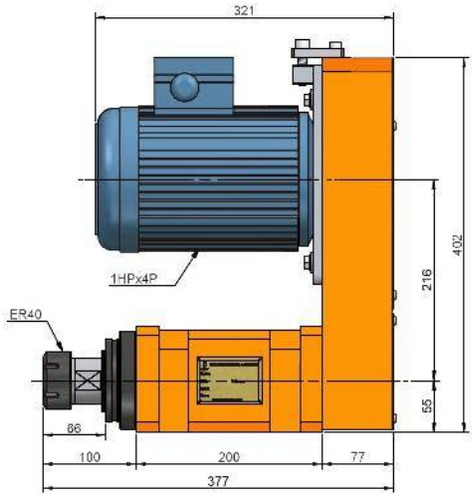

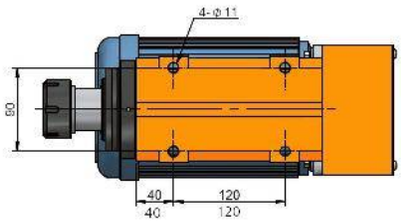

S45H-ER40-MB
S45H-NT30-MB

TOTAL WEIGHT	45 kg

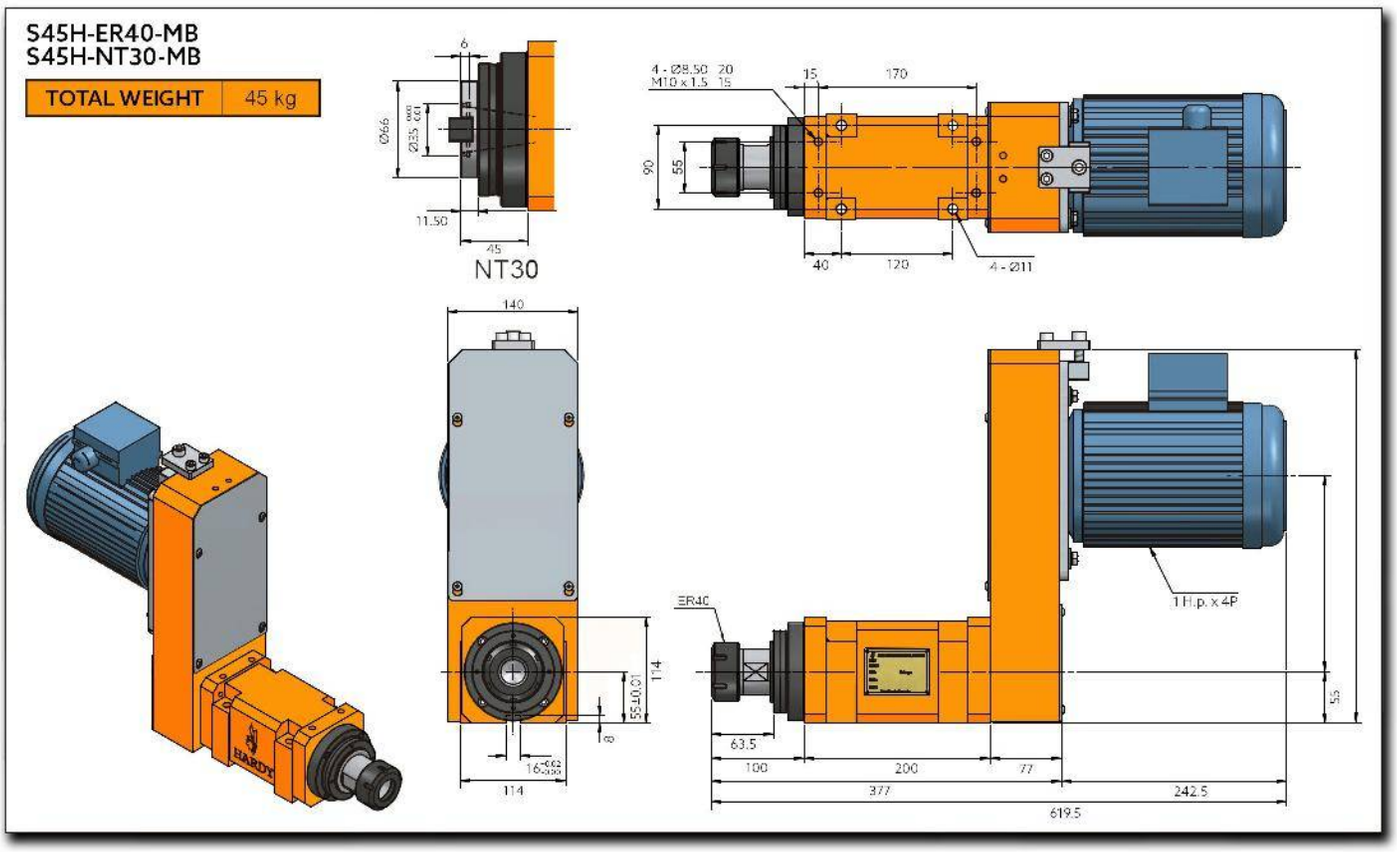

S55

Boring/Milling Spindle Head

(Machinig Process Unit)

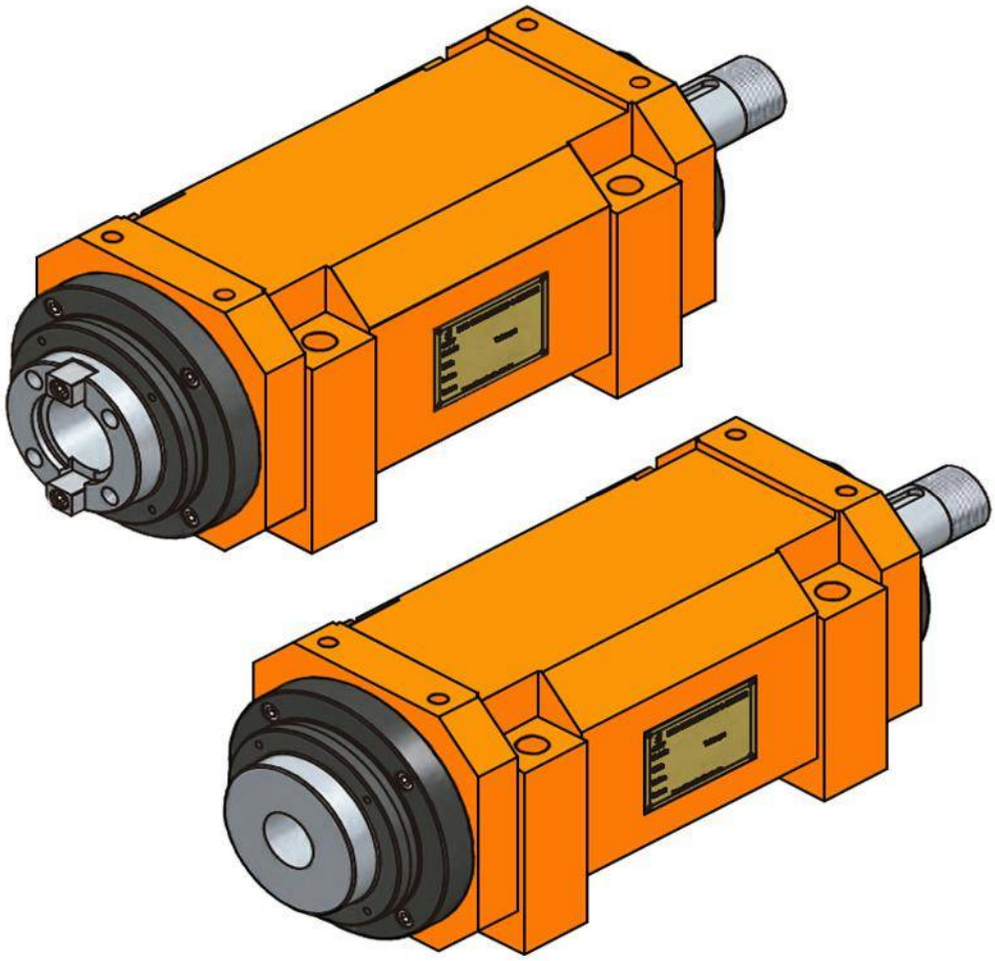

Characteristics & Dimensions

MODEL	S55
Spindle Model	*NT40 - MT4*
Maximum Speed (r.p.m.)	*2,000*
Bearings Model	*32011 | 6011Z* *32010 | 6010Z*
Maximum Power	*Within 3 H.p.*
Raising Temperature	*Within 20°C*

**** Roundness: Within 0.003 millimeters.*
***** All dimensions are given in millimeters.*

S55-NT40-MF
S55-MT4-MF

TOTAL WEIGHT	34.5 kg

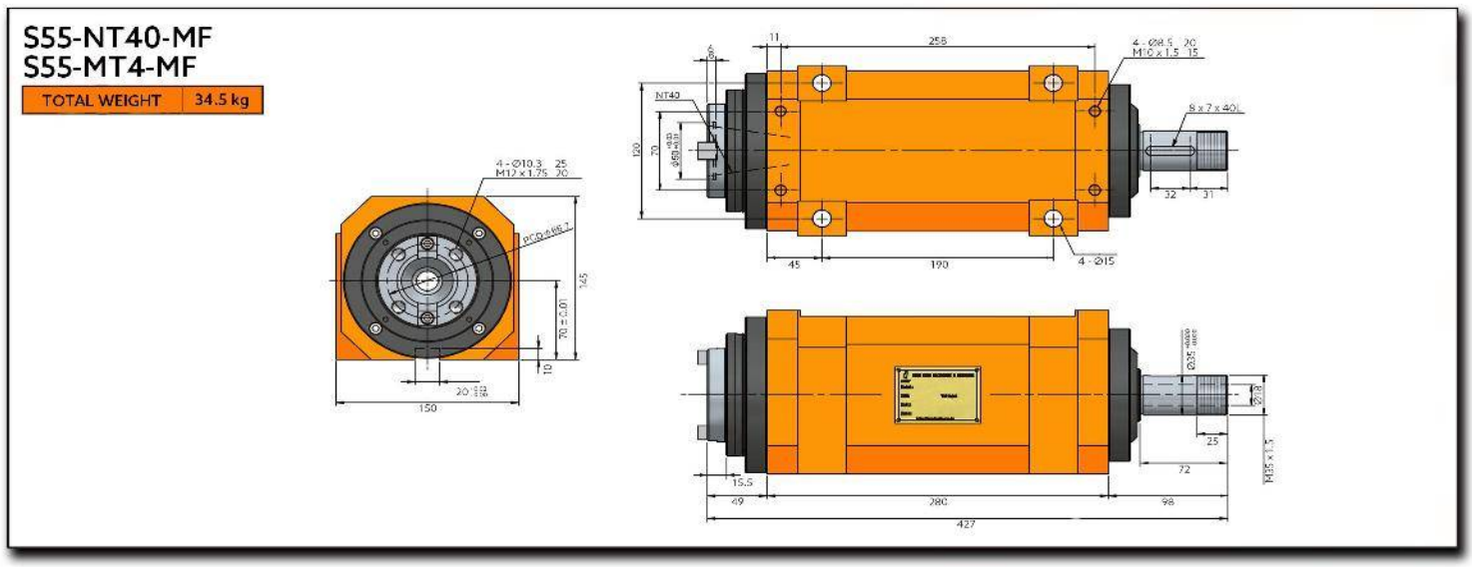

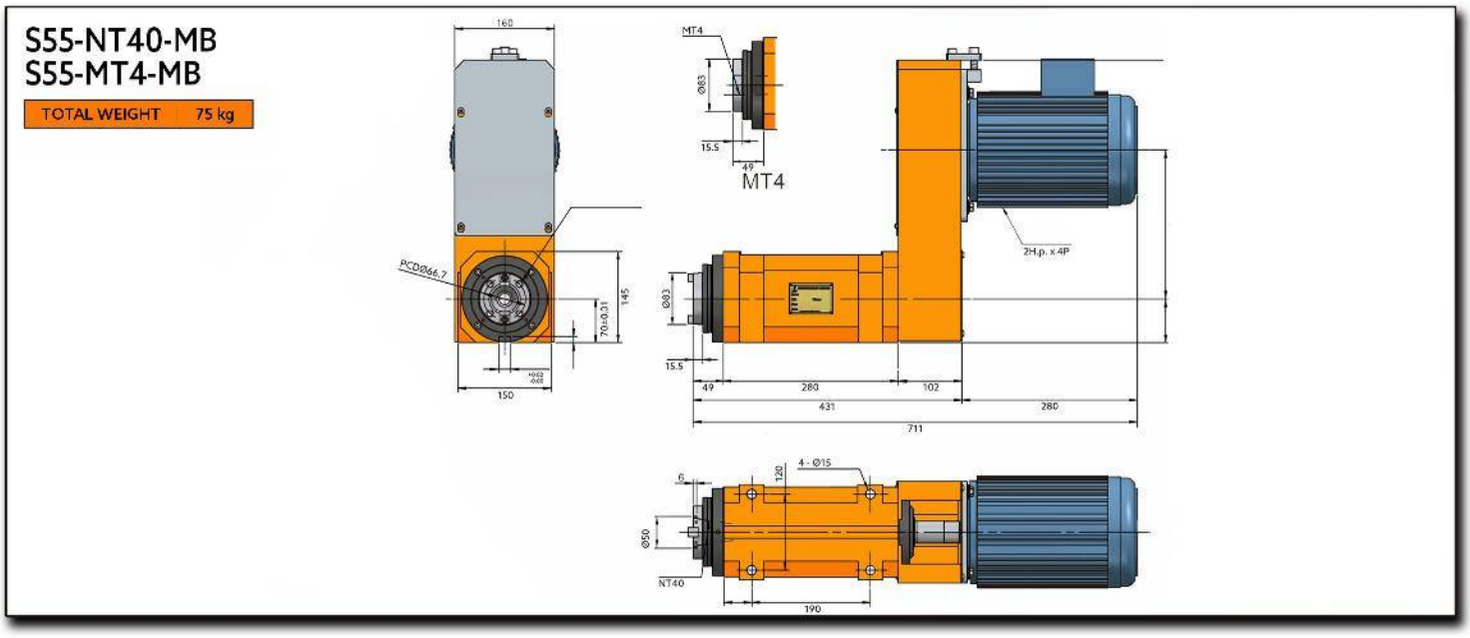
S55-NT40-MB
S55-MT4-MB
TOTAL WEIGHT 75 kg
160
PCDØ66.7
145
150
MT4
Ø83
15.5
49
MT4
2H.p. x 4P
Ø83
15.5
49
280
102
431
280
711
4 - Ø15
120
6
Ø50
NT40
190

S55-NT40-MB
S55-MT4-MB

TOTAL WEIGHT	34.5 kg

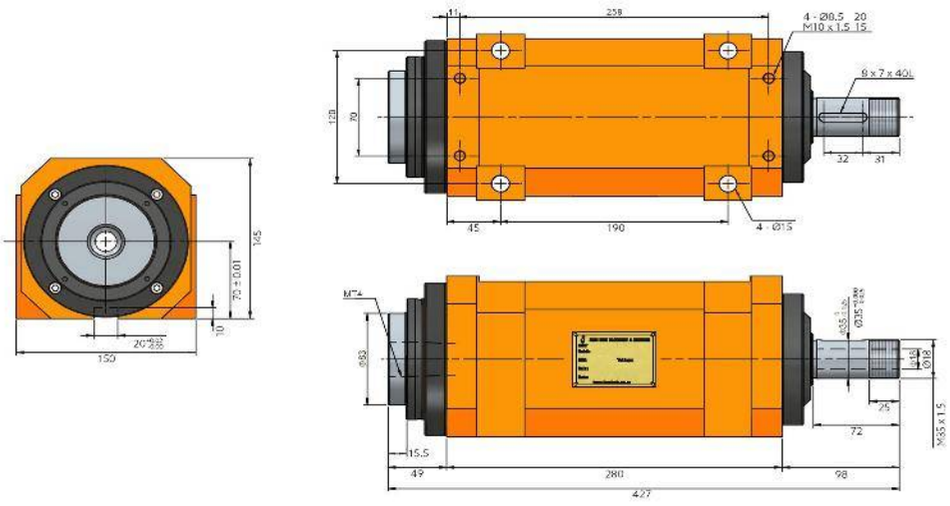

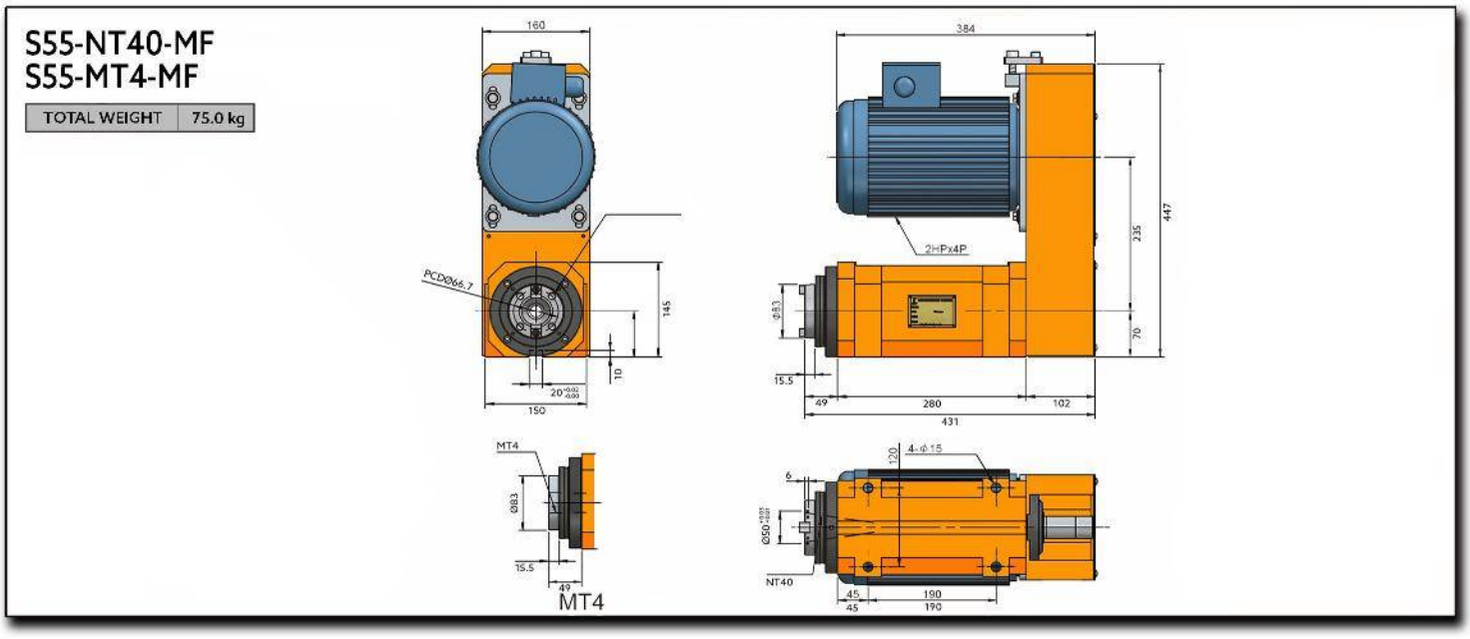
S55-NT40-MF
S55-MT4-MF
TOTAL WEIGHT 75.0 kg
160
PCD066.7
145
10
150
MT4
Ø83
15.5
49
MT4
384
2HPx4P
235
447
70
Ø53
15.5
49
280
102
431
120
4-Φ15
6
Ø50
NT40
45
190
45
190

S55H

High Performance Boring/Milling Spindle Head

(Machinig Process Unit)

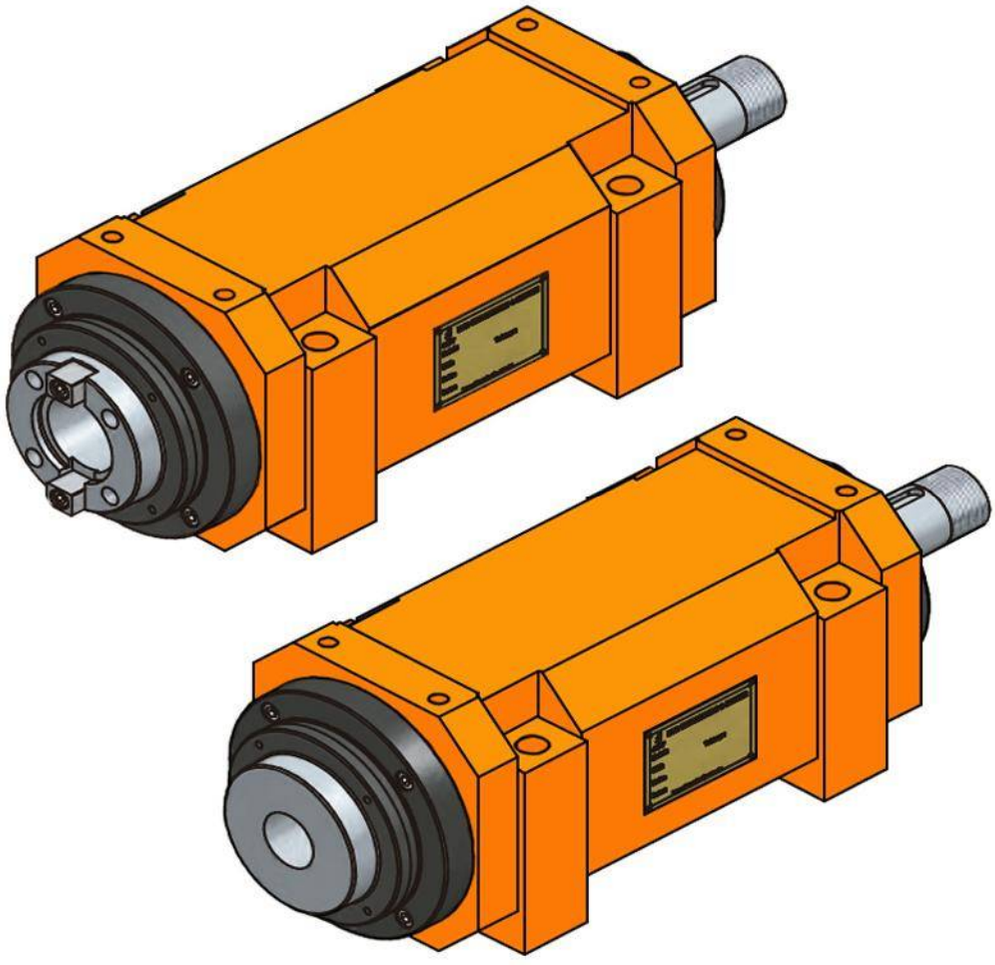

S60-NT40
S60-A2-4
S60-FB50

TOTAL WEIGHT	57 Kg

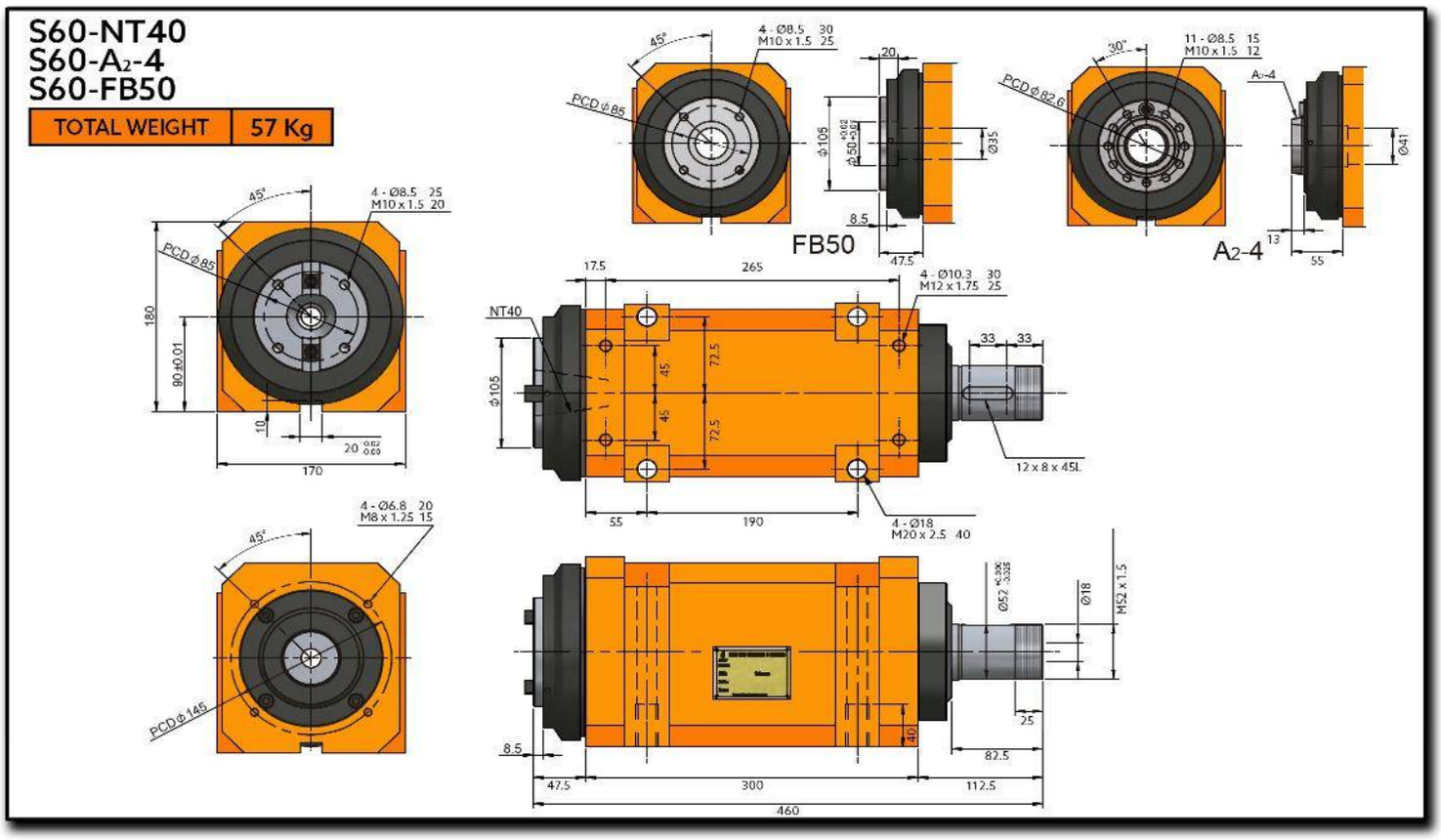

Characteristics & Dimensions

MODEL	S55H
Spindle Model	*NT40 - MT4*
Maximum Speed (r.p.m.)	*6,000*
Bearings Model	*7011 x 2* *7010 x 2*
Maximum Power	*Within 3 H.p.*
Raising Temperature	*Within 20°C*

**** Roundness: Within 0.003 millimeters.*
***** All dimensions are given in millimeters.*

S55H-NT40-MF
S55H-MT4-MF

TOTAL WEIGHT	75 kg

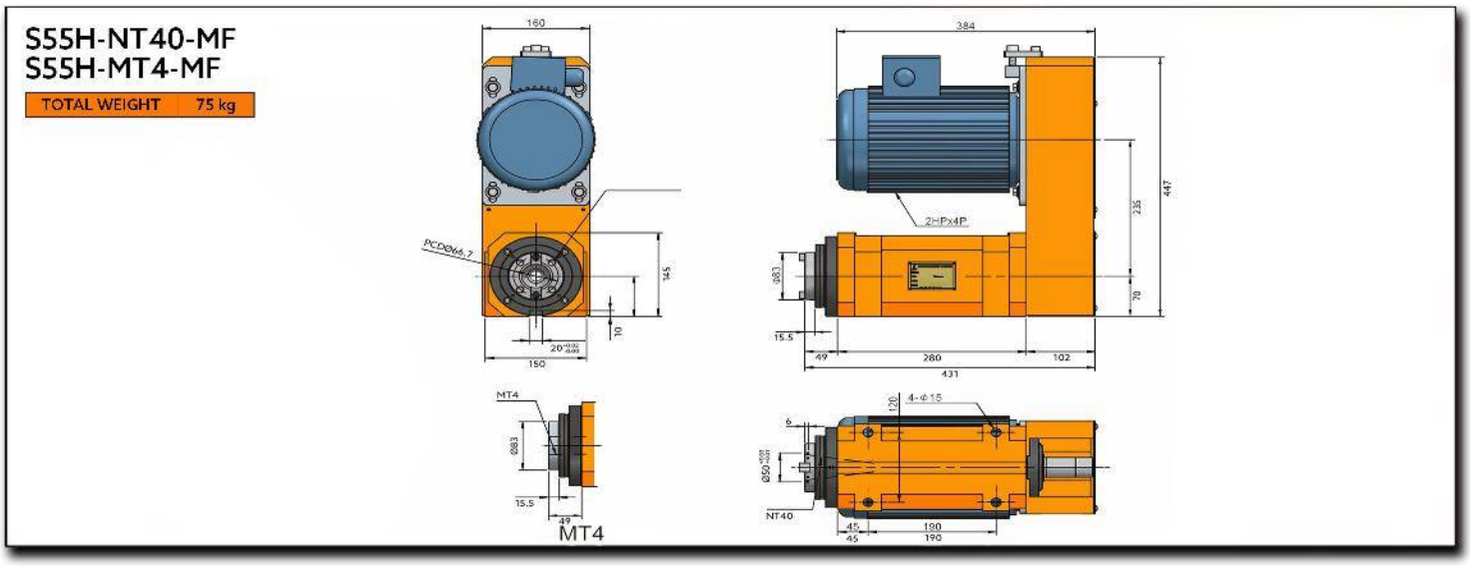

S55H-NT40-MB
S55H-MT4-MB

TOTAL WEIGHT	75.0 kg

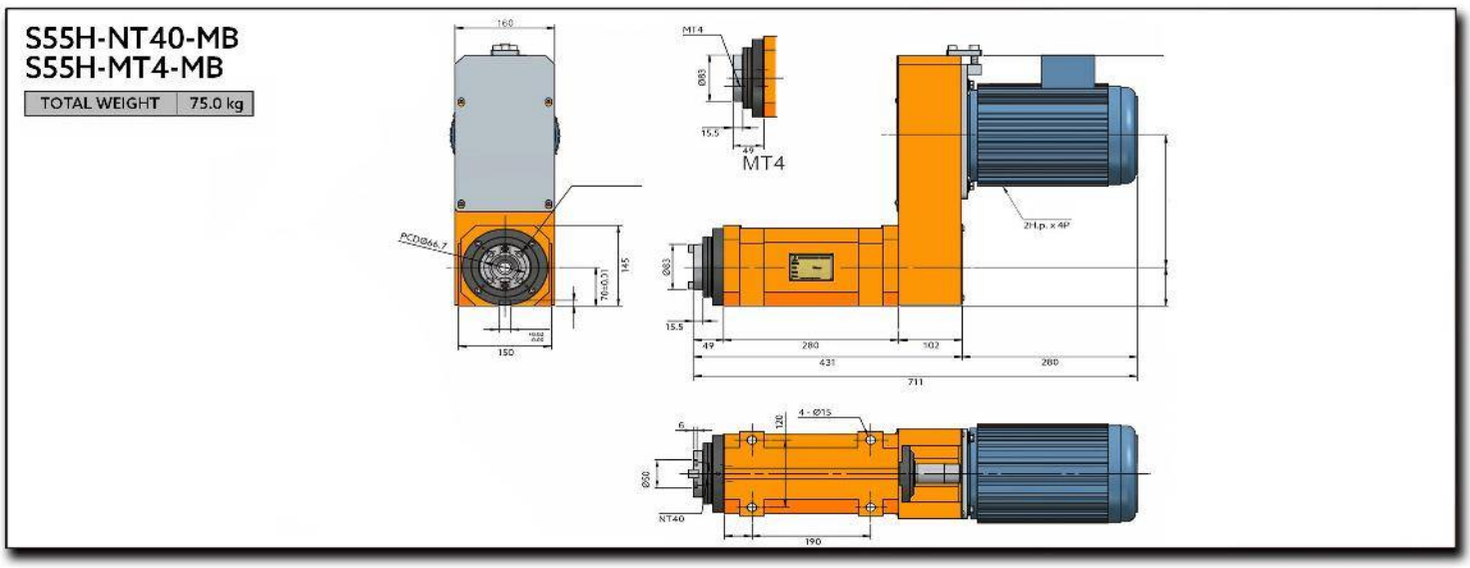

S60H

High Performance Boring/Milling Spindle Head

(Machinig Process Unit)

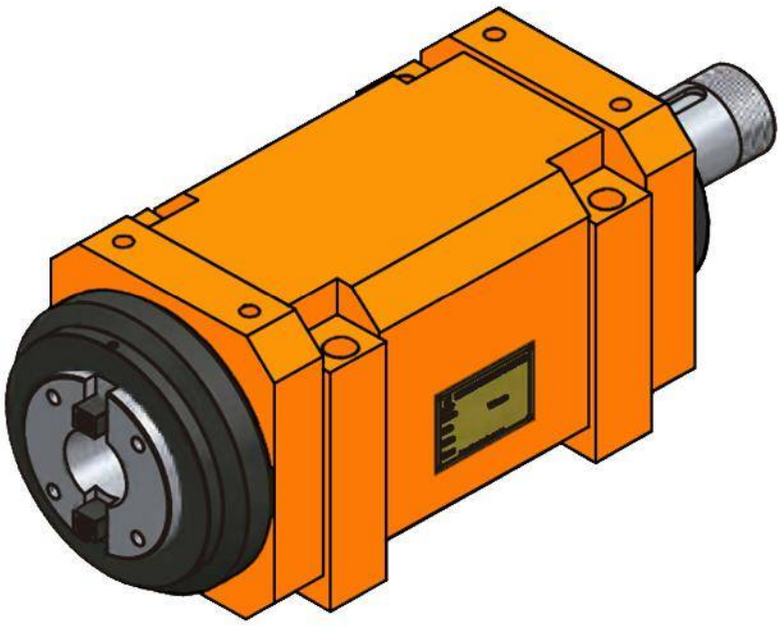

S60H-NT40-MB
S60H-A2-4-MB
S60H-FB50-MB

TOTAL WEIGHT	57 Kg

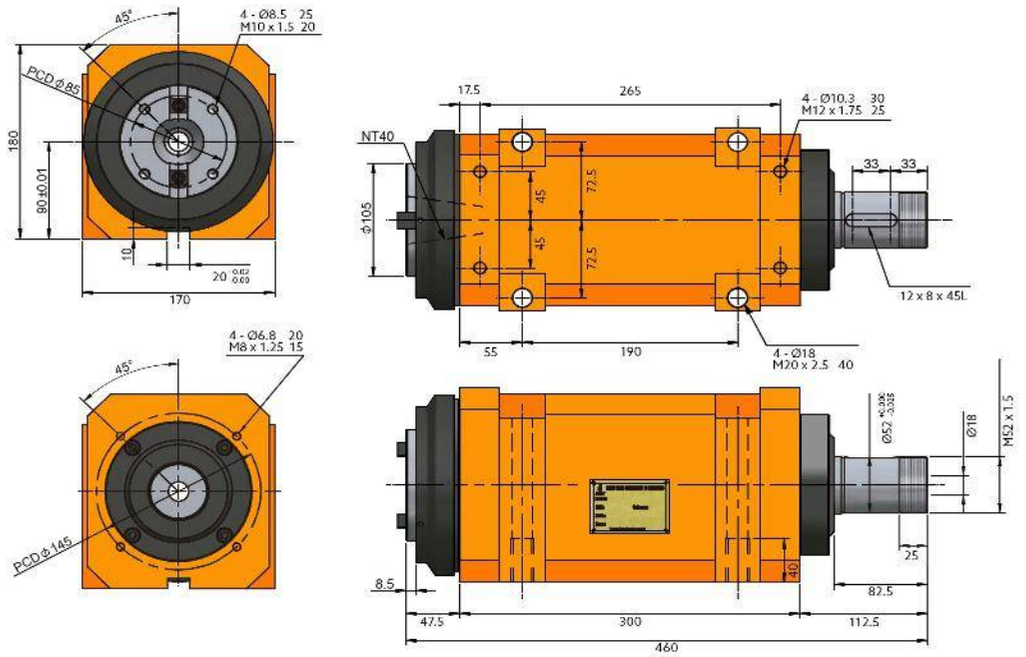

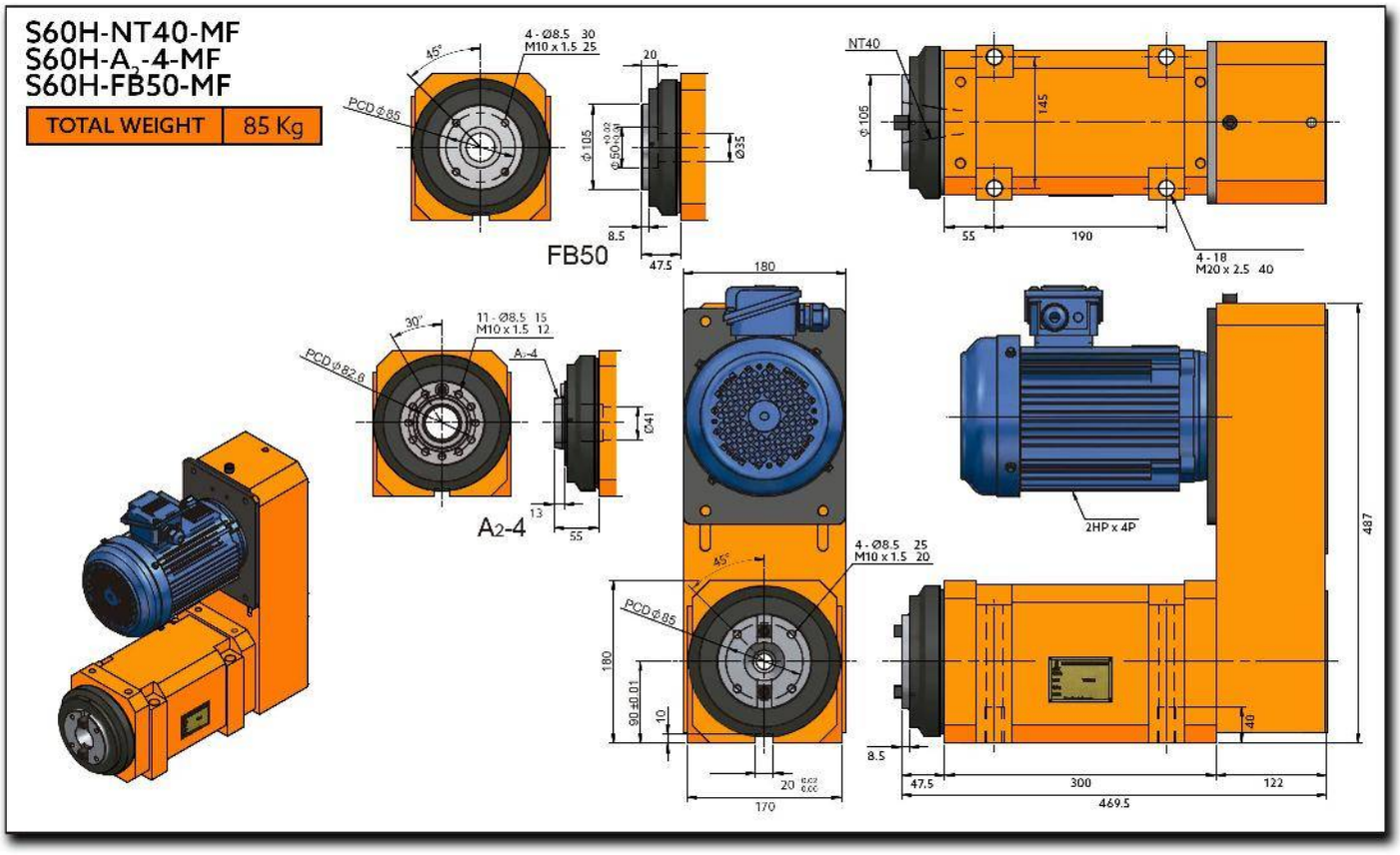
S60H-NT40-MF
S60H-A2-4-MF
S60H-FB50-MF
TOTAL WEIGHT
85 Kg
4 - Ø8.5 30
M10 x 1.5 25
45°
PCD Ø85
20
Ø105
Ø50
Ø35
8.5
47.5
FB50
NT40
Ø105
145
55
190
4 - 18
M20 x 2.5 40
180
11 - Ø8.5 15
M10 x 1.5 12
30°
PCD Ø82.8
A2-4
Ø41
13
55
A2-4
2HP x 4P
4 - Ø8.5 25
M10 x 1.5 20
45°
PCD Ø85
180
90 ±0.01
10
20
170
8.5
47.5
300
122
469.5
40
487

S60H-NT40-MB
S60H-A2-4-MB
S60H-FB50-MB

TOTAL WEIGHT	57 Kg

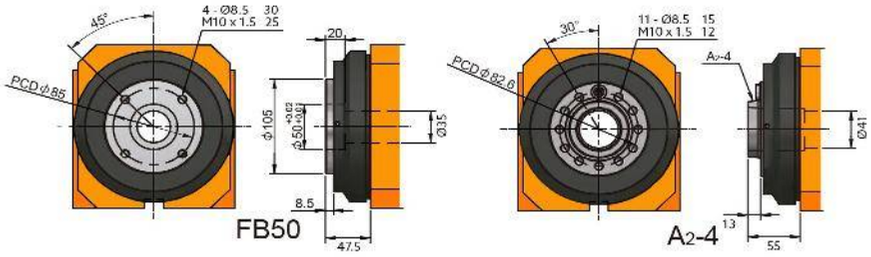

Characteristics & Dimensions

MODEL	S60H
Spindle Model	*NT40 - A_2-4 - FB50*
Maximum Speed (r.p.m.)	*5,000*
Bearings Model	*7211 x 2* *7212 x 2*
Maximum Power	*Within 5 H.p.*
Raising Temperature	*Within 20°C*

**** Roundness: Within 0.003 millimeters.*
***** All dimensions are given in millimeters.*

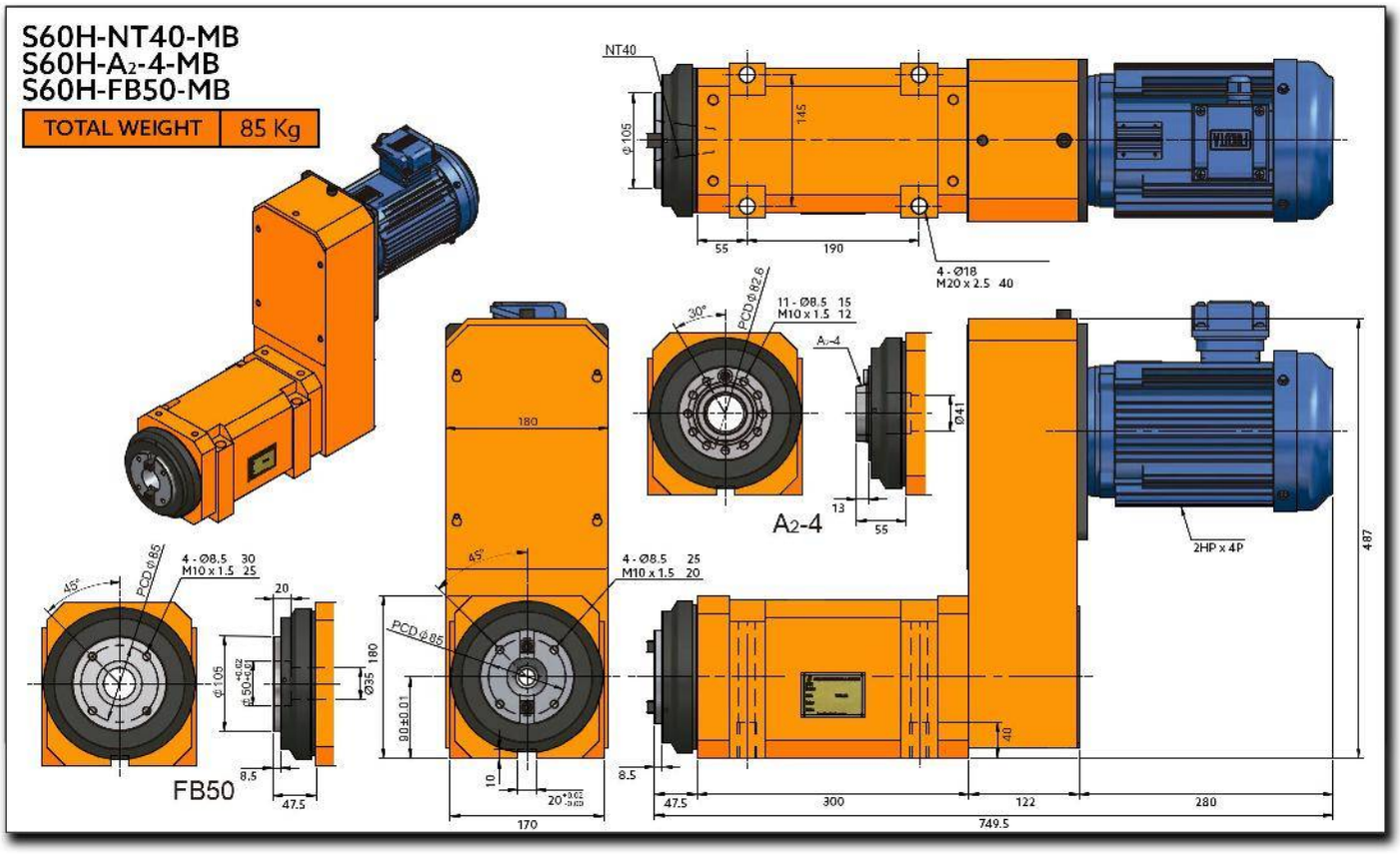
S60H-NT40-MB
S60H-A2-4-MB
S60H-FB50-MB
TOTAL WEIGHT
85 Kg
NT40
Φ105
145
55
190
4 - Ø18
M20 x 2.5 40
180
30°
PCD Φ82.6
11 - Ø8.5 15
M10 x 1.5 12
A2-4
Ø41
13
55
2HP x 4P
487
45°
PCD Φ85
4 - Ø8.5 30
M10 x 1.5 25
20
Φ105
Ø50
Ø35
180
8.5
47.5
FB50
4 - Ø8.5 25
M10 x 1.5 20
90±0.01
10
20
170
40
8.5
47.5
300
122
280
749.5

S75

Boring/Milling Spindle Head

(Machinig Process Unit)

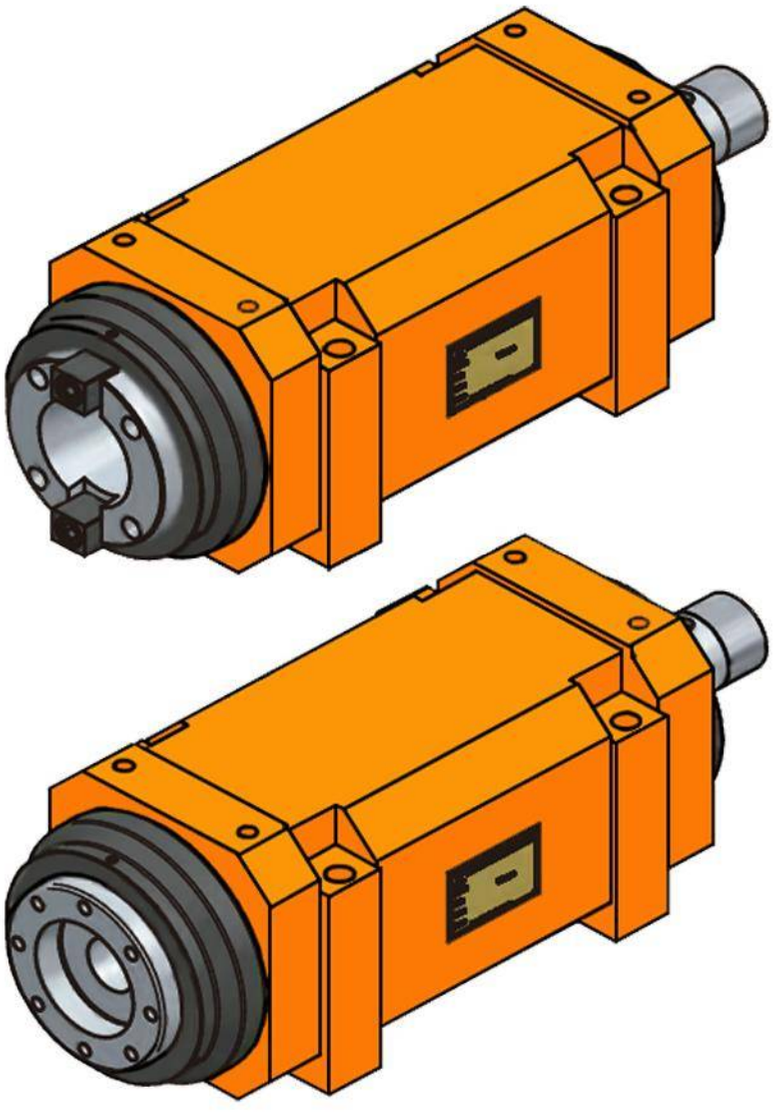

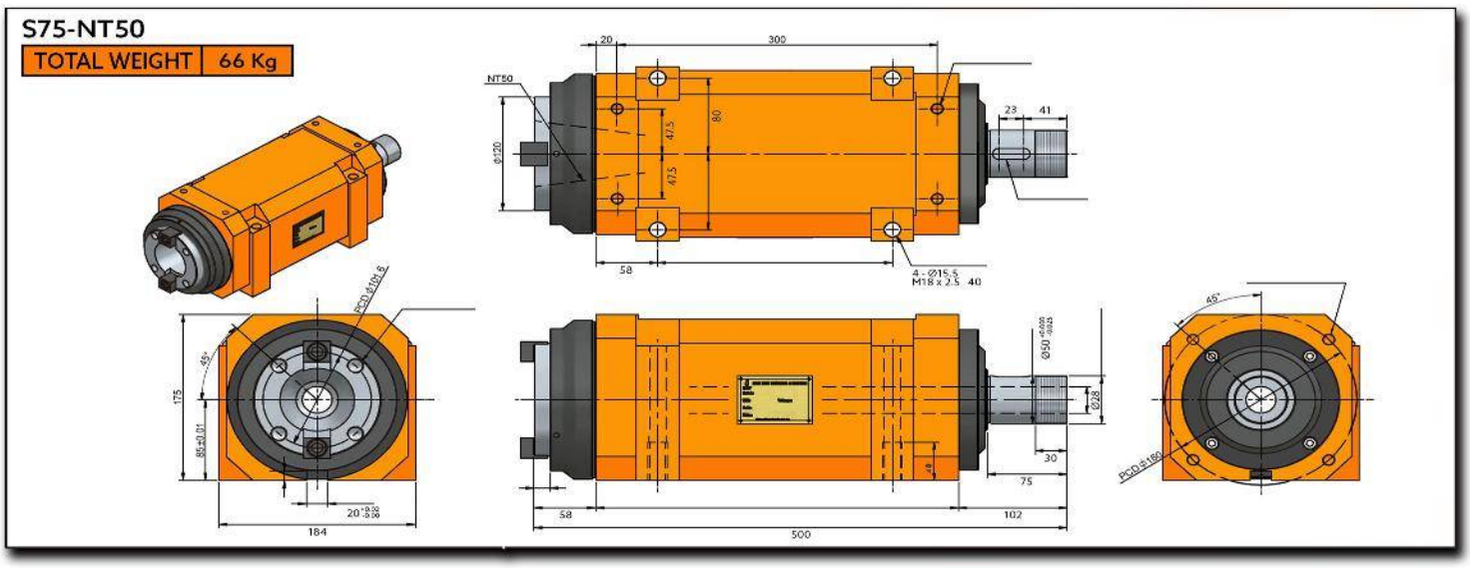
S75-NT50
TOTAL WEIGHT
66 Kg
NT50
20
300
23
41
80
47.5
47.5
58
4 - Ø15.5
M18 x 2.5 40
PCD Ø101.6
45°
175
85±0.01
184
Ø50
Ø28
30
75
58
102
500
45°
PCD Ø180

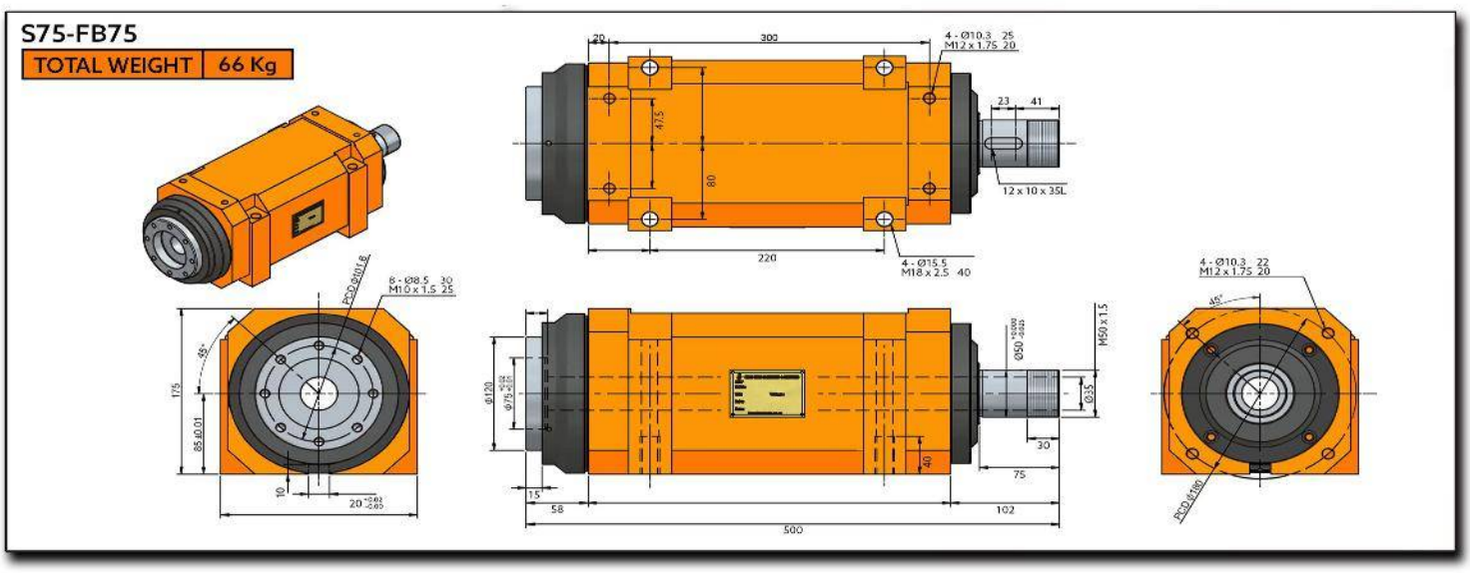
S75-FB75
TOTAL WEIGHT
66 Kg
300
220
500
12 x 10 x 35L
4 - Ø10.3 25
M12 x 1.75 20
4 - Ø15.5
M18 x 2.5 40
8 - Ø8.5 30
M10 x 1.5 25
4 - Ø10.3 22
M12 x 1.75 20
M50 x 1.5
175
85 ±0.01
58
102
75
30
15
40
45°

Characteristics & Dimensions

MODEL	S75
Spindle Model	*NT50 - FB75*
Maximum Speed (r.p.m.)	*1,600*
Bearings Model	*32015 | 6015Z* *32014 | 6014Z*
Maximum Power	*Within 5 H.p.*
Raising Temperature	*Within 20°C*

**** Roundness: Within 0.003 millimeters.*
***** All dimensions are given in millimeters.*

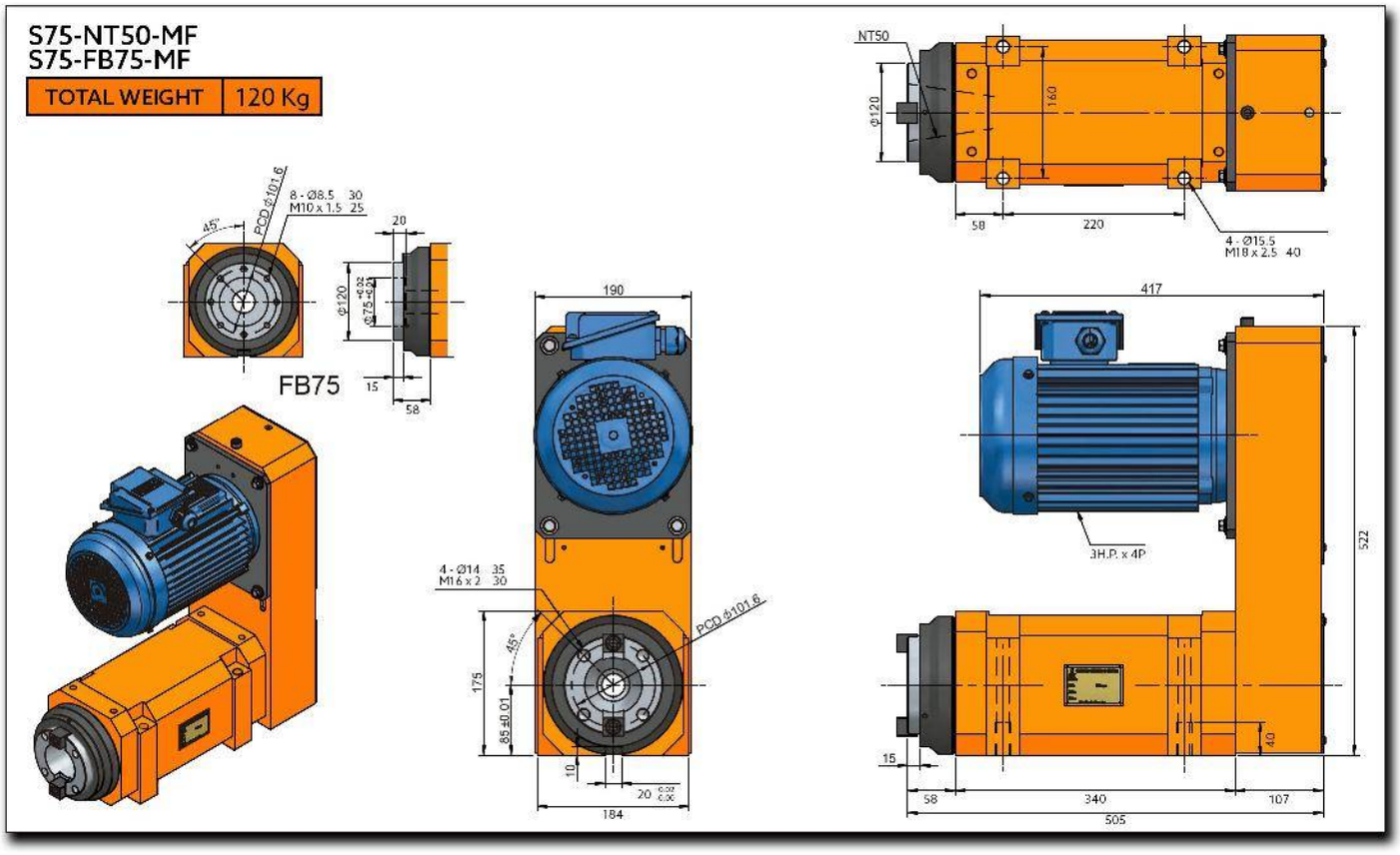
S75-NT50-MF
S75-FB75-MF
TOTAL WEIGHT
120 Kg
NT50
Φ120
160
58
220
4 - Ø15.5
M18 x 2.5 40
8 - Ø8.5 30
M10 x 1.5 25
PCD Φ101.6
45°
20
Φ120
Φ75
15
58
FB75
190
4 - Ø14 35
M16 x 2 30
175
65 ±0.01
10
20
184
417
3H.P. x 4P
522
40
15
58
340
107
505

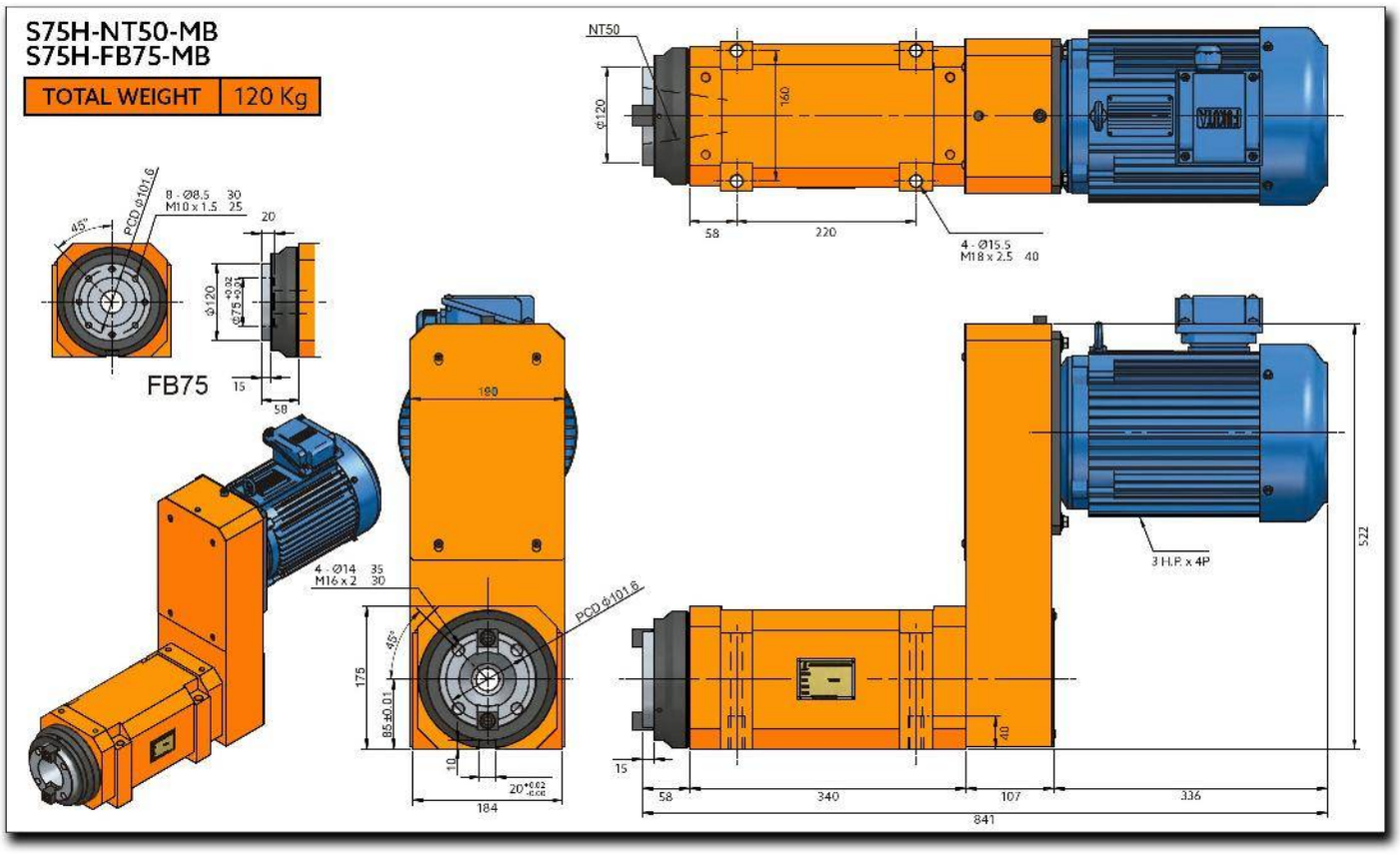
S75H-NT50-MB
S75H-FB75-MB
TOTAL WEIGHT
120 Kg
NT50
Ø120
160
58
220
4 - Ø15.5
M18 x 2.5 40
8 - Ø8.5 30
M10 x 1.5 25
PCD ø101.6
45°
20
Ø120
Ø75 +0.02 +0.01
15
50
FB75
190
4 - Ø14 35
M16 x 2 30
175
85 ±0.01
10
20 +0.02 +0.00
184
3 H.P. x 4P
522
40
15
58
340
107
336
841

S75H

High Performance Boring/Milling Spindle Head

(Machinig Process Unit)

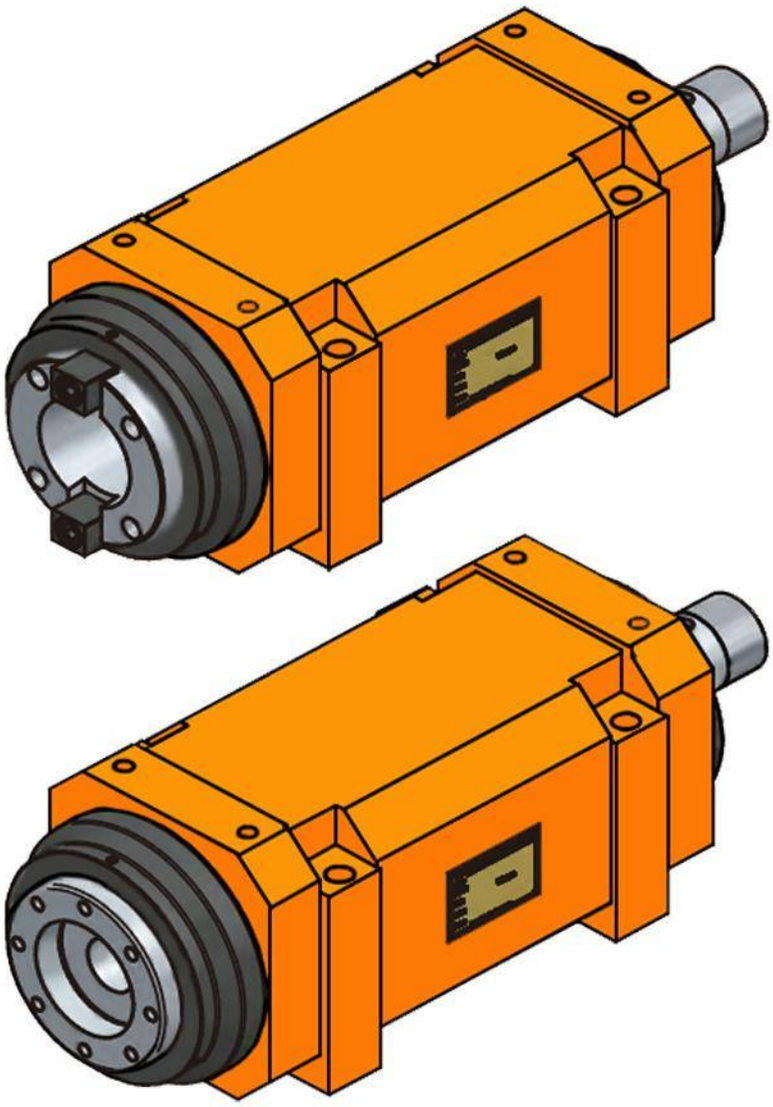

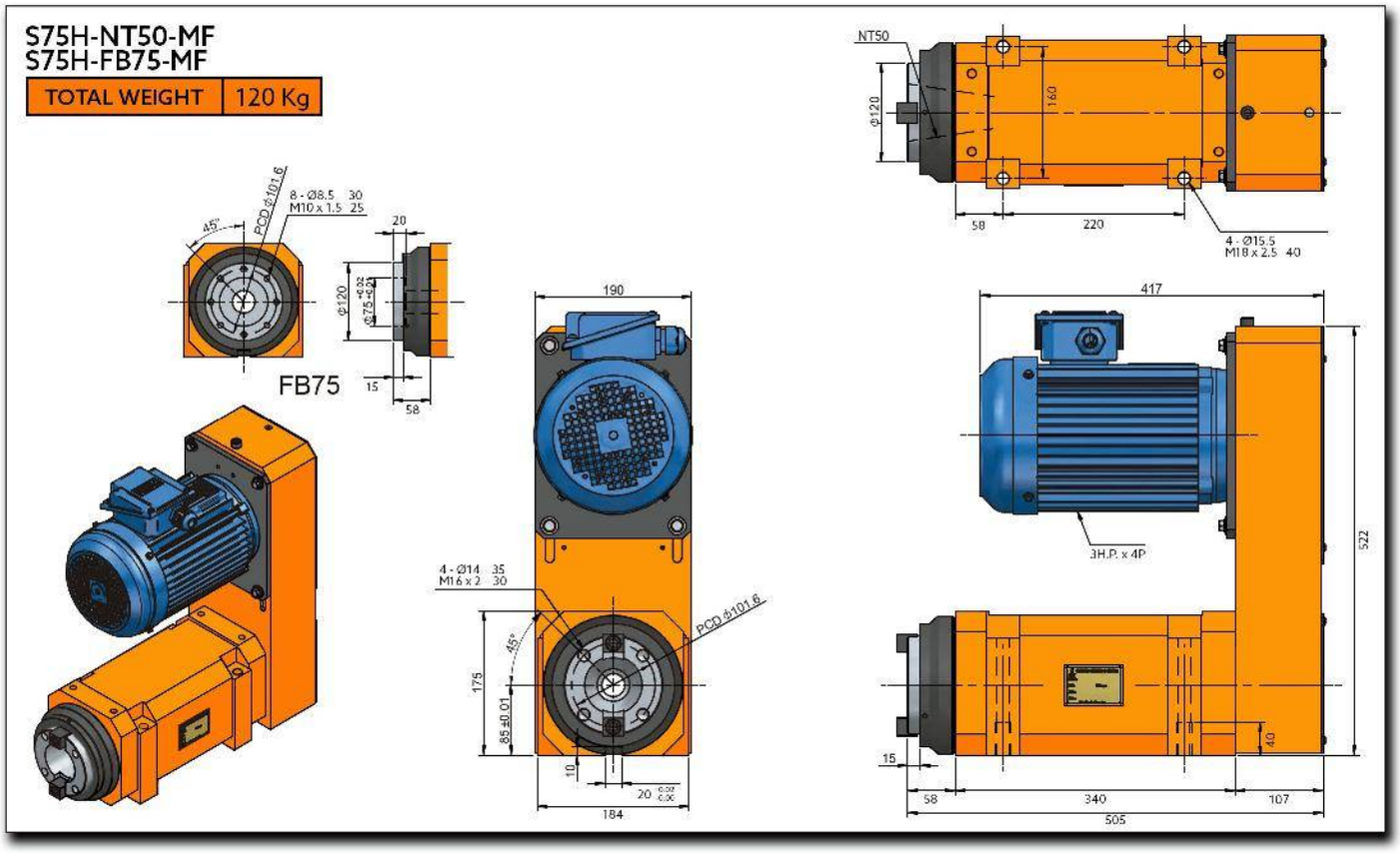
S75H-NT50-MF
S75H-FB75-MF
TOTAL WEIGHT
120 Kg
NT50
Φ120
160
58
220
4 - Ø15.5
M18 x 2.5 40
8 - Ø8.5 30
M10 x 1.5 25
PCD Φ101.6
45°
20
Φ120
Φ75 +0.03 +0.01
15
58
FB75
190
4 - Ø14 35
M16 x 2 30
PCD Φ101.6
45°
175
65 ±0.01
10
20
184
417
3H.P. x 4P
522
40
15
58
340
107
505

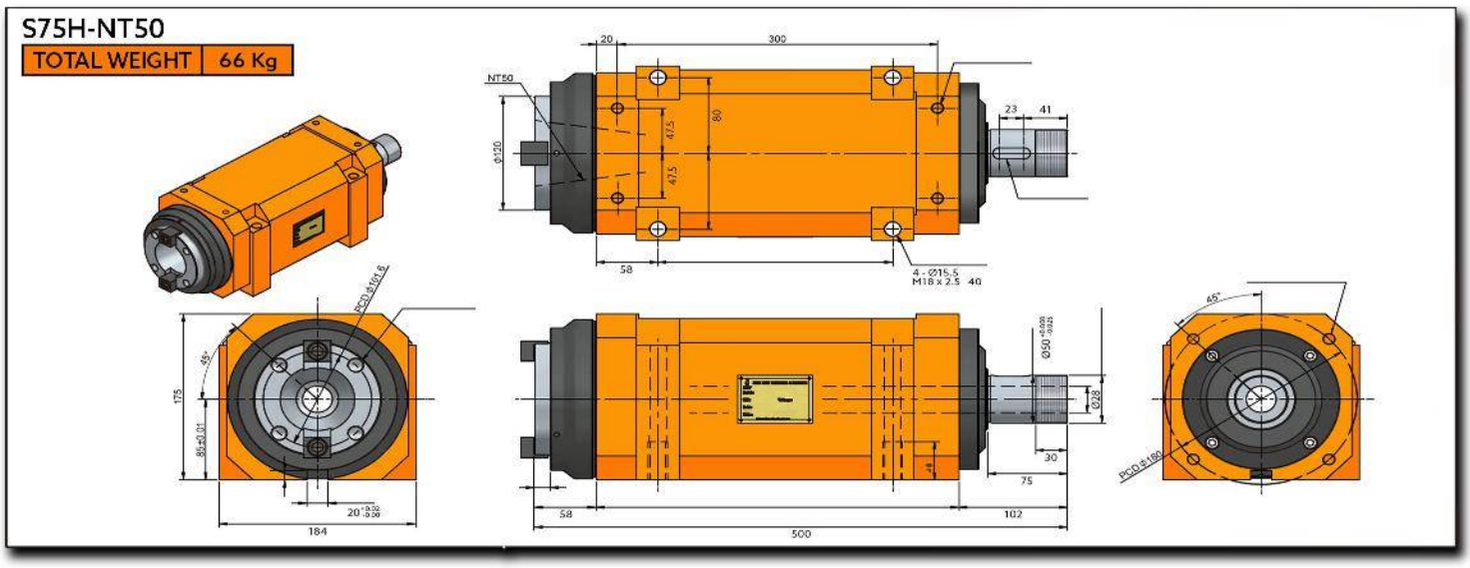
S75H-NT50
TOTAL WEIGHT
66 Kg
NT50
20
300
23
41
80
47.5
47.5
58
4 - Ø15.5
M18 x 2.5 40
PCD Ø161.6
45°
175
85±0.01
184
Ø50
Ø28
30
75
58
102
500
PCD Ø180
45°

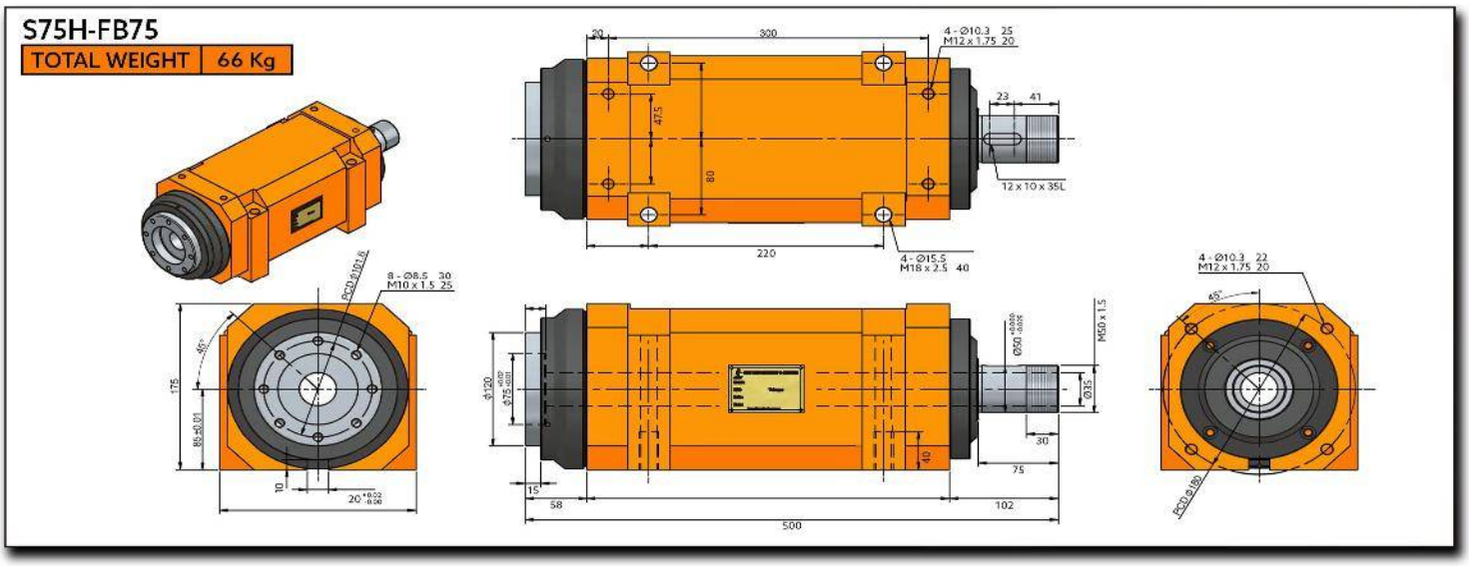
S75H-FB75
TOTAL WEIGHT
66 Kg
320
4 - Ø10.3 25
M12 x 1.75 20
23
41
475
80
12 x 10 x 35L
220
4 - Ø15.5
M18 x 2.5 40
8 - Ø8.5 30
M10 x 1.5 25
PCD Ø102.6
175
85±0.01
10
20
M50 x 1.5
Ø50
Ø35
Ø120
Ø75
30
40
75
15
58
102
500
4 - Ø10.3 22
M12 x 1.75 20
PCD Ø130

Characteristics & Dimensions

MODEL	S75H
Spindle Model	*NT50 - FB75*
Maximum Speed (r.p.m.)	*4,000*
Bearings Model	*7015 x 2* *7014 x 2*
Maximum Power	*Within 5 H.p.*
Raising Temperature	*Within 20°C*

**** Roundness: Within 0.003 millimeters.*
***** All dimensions are given in millimeters.*

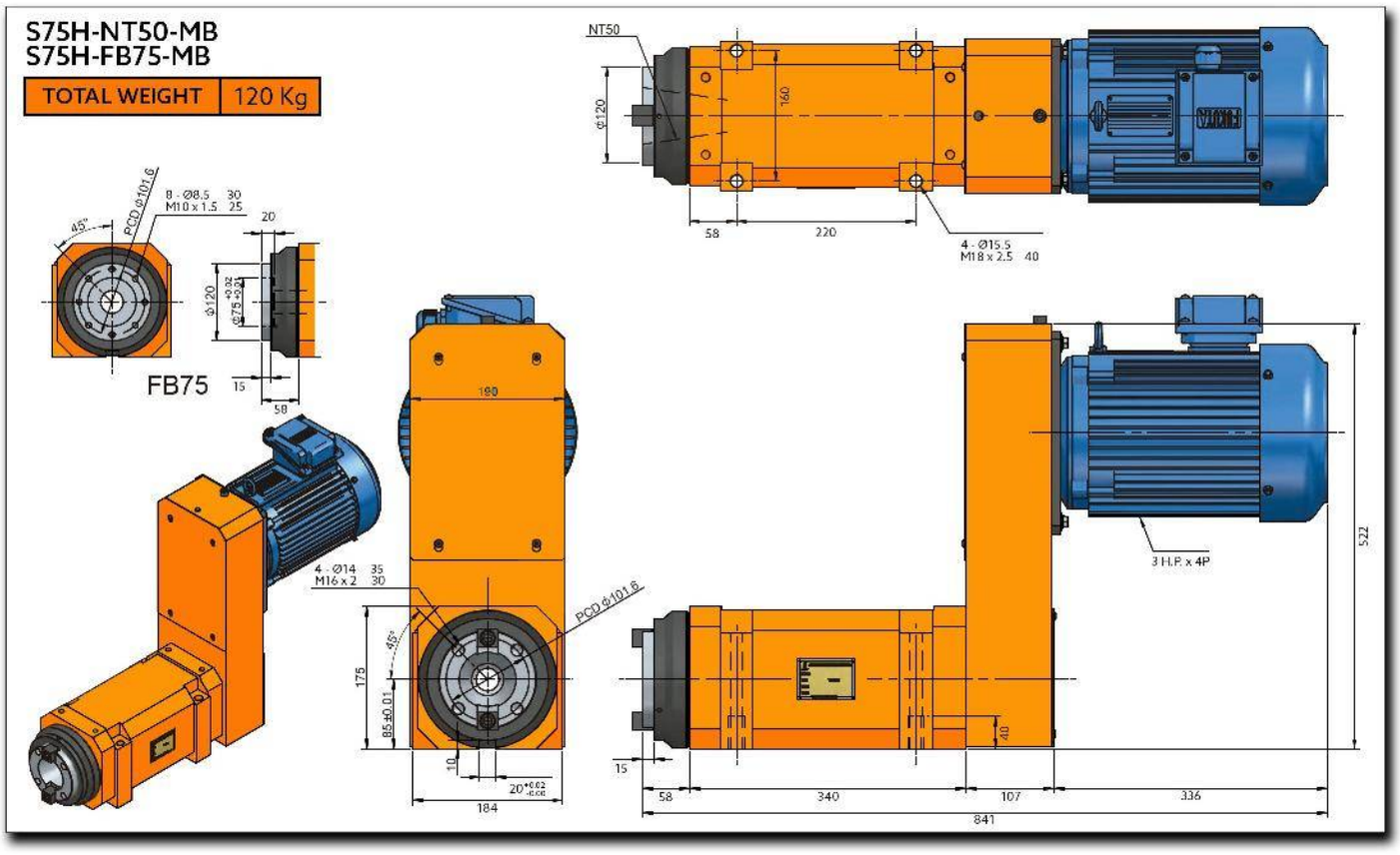
S75H-NT50-MB
S75H-FB75-MB
TOTAL WEIGHT
120 Kg
NT50
FB75
3 H.P. x 4P
841

S80

Boring/Milling Spindle Head

(Machinig Process Unit)

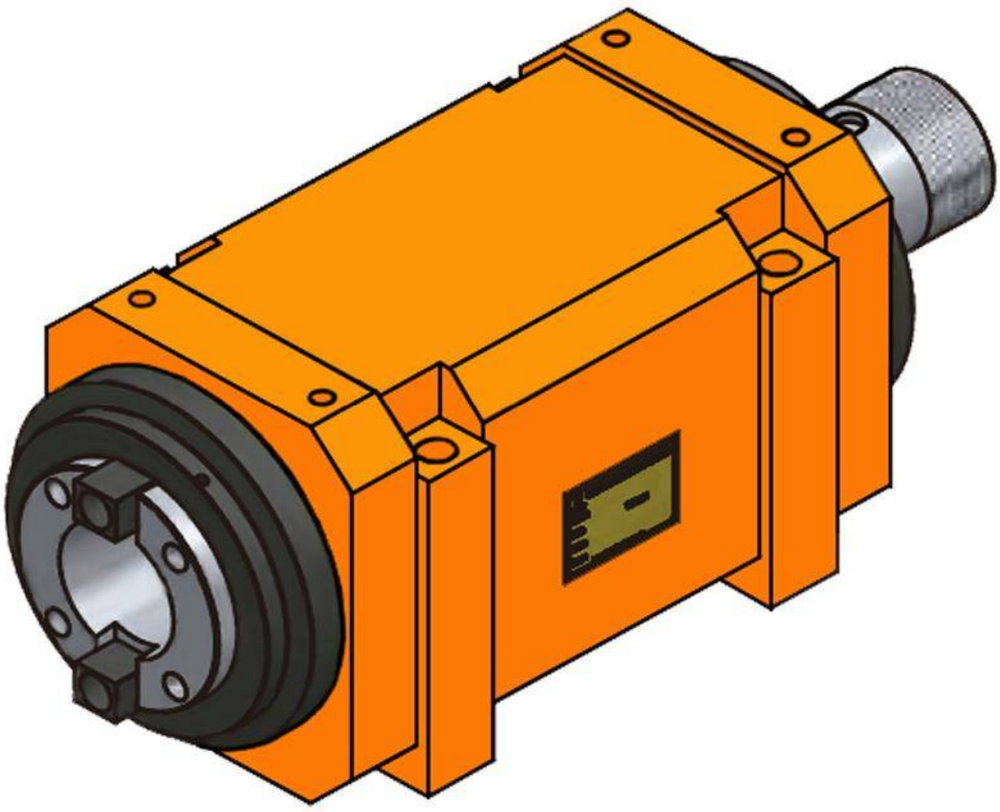

S80-NT50
S80-A2-5
S80-FB75

TOTAL WEIGHT	84 Kg

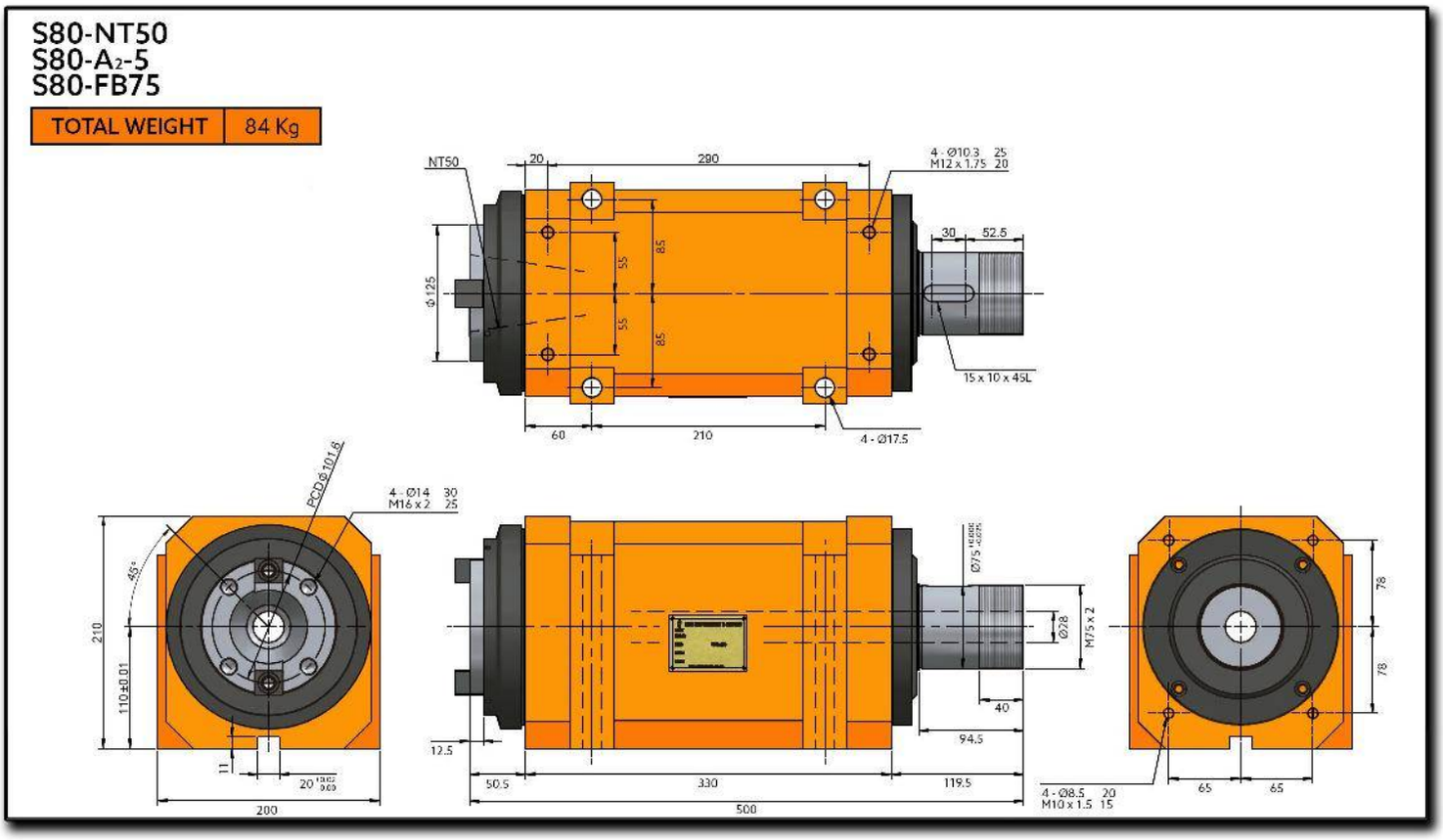

S80-NT50
S80-A2-5
S80-FB75

TOTAL WEIGHT	84 Kg

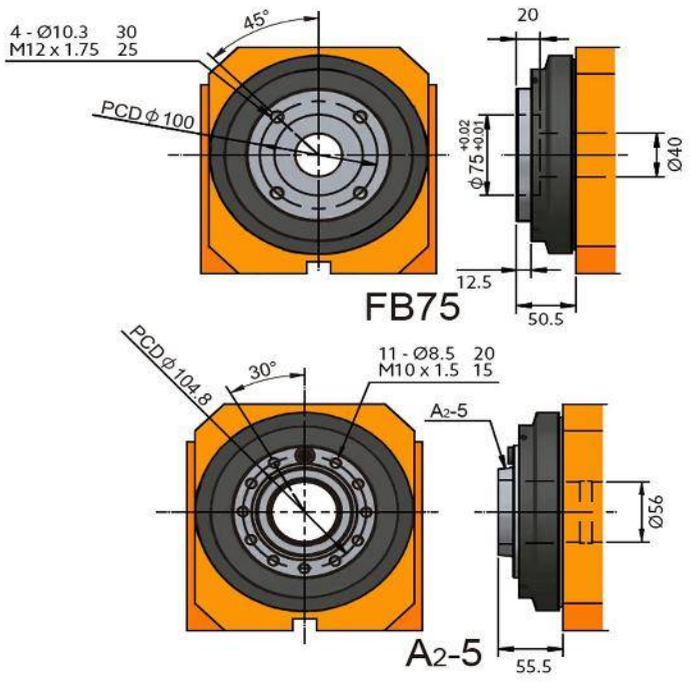

Characteristics & Dimensions

MODEL	S80
Spindle Model	*NT50 - A_2-5 - FB75*
Maximum Speed (r.p.m.)	*1,200*
Bearings Model	*32216 x 2* *6216Z x 2*
Maximum Power	*Within 7.5 H.p.*
Raising Temperature	*Within 20°C*

**** Roundness: Within 0.003 millimeters.*
***** All dimensions are given in millimeters.*

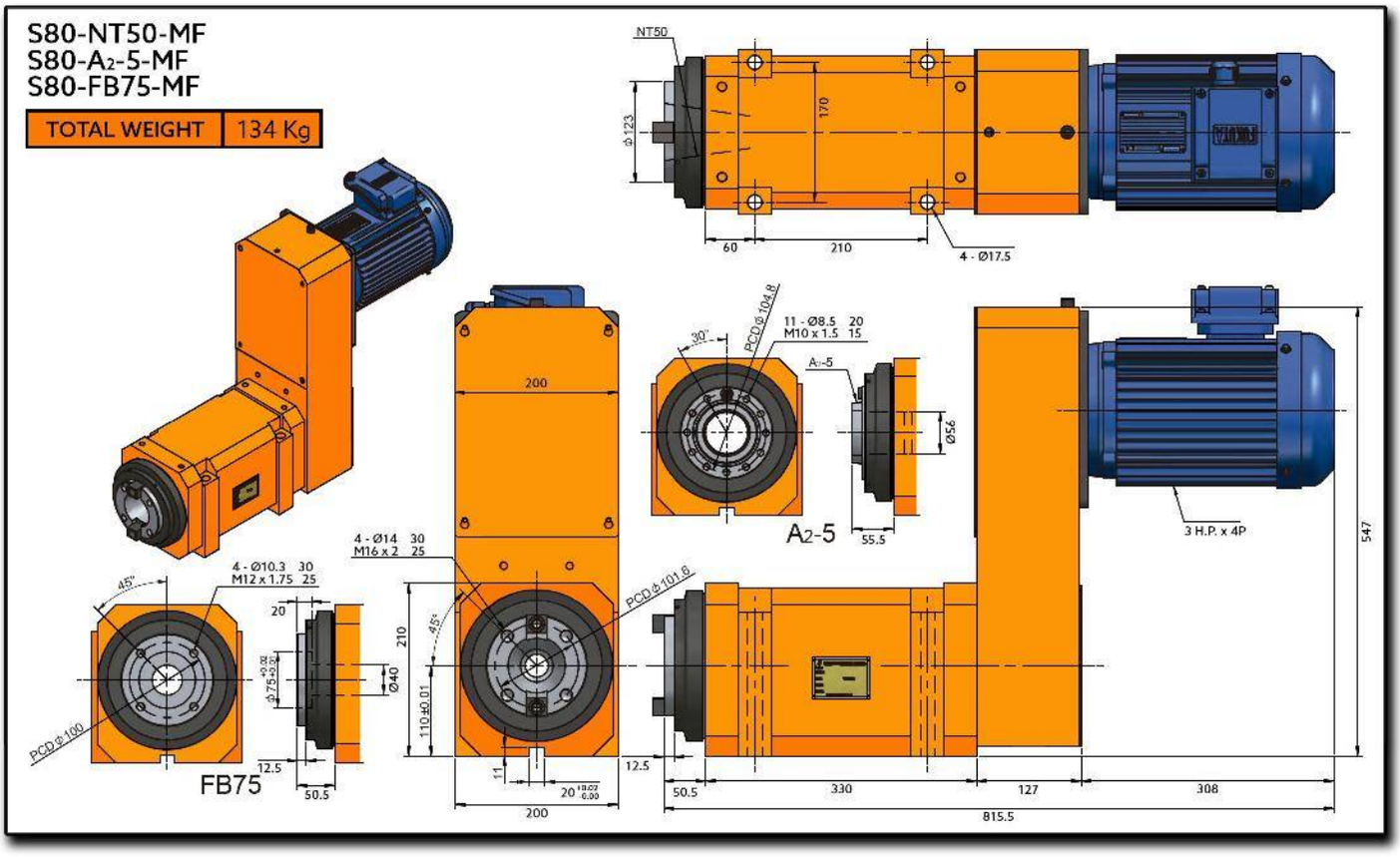
S80-NT50-MF
S80-A2-5-MF
S80-FB75-MF
TOTAL WEIGHT
134 Kg
NT50
Ø123
170
60
210
4 - Ø17.5
200
30°
PCD Ø104.8
11 - Ø8.5 20
M10 x 1.5 15
A2-5
Ø56
55.5
3 H.P. x 4P
547
4 - Ø14 30
M16 x 2 25
45°
4 - Ø10.3 30
M12 x 1.75 25
20
Ø75
Ø40
210
110±0.01
PCD Ø101.6
PCD Ø100
FB75
12.5
50.5
11
200
330
127
308
815.5

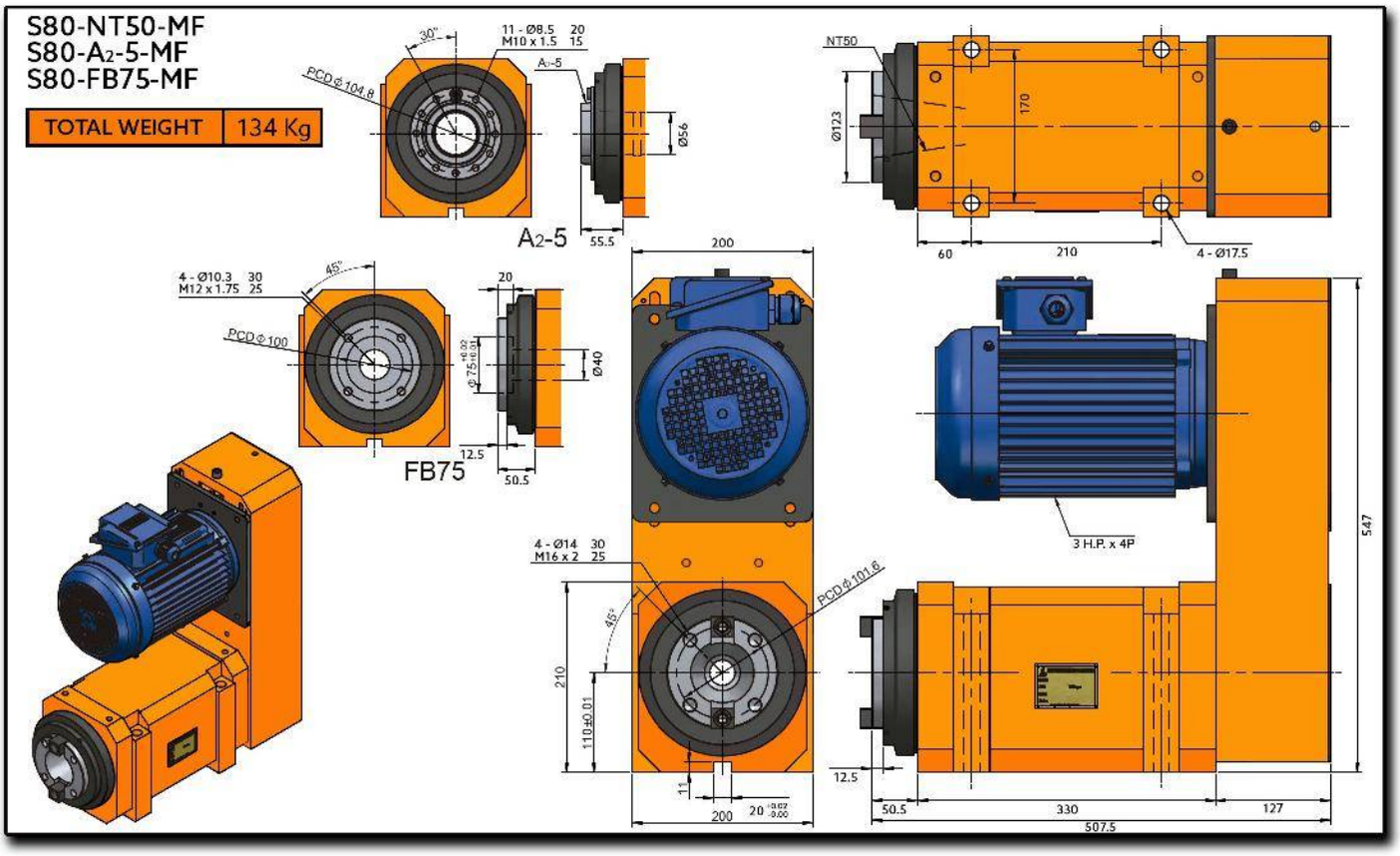
S80-NT50-MF
S80-A2-5-MF
S80-FB75-MF
TOTAL WEIGHT
134 Kg
A2-5
FB75
NT50
3 H.P. x 4P

S80H

High Performance Boring/Milling Spindle Head

(Machinig Process Unit)

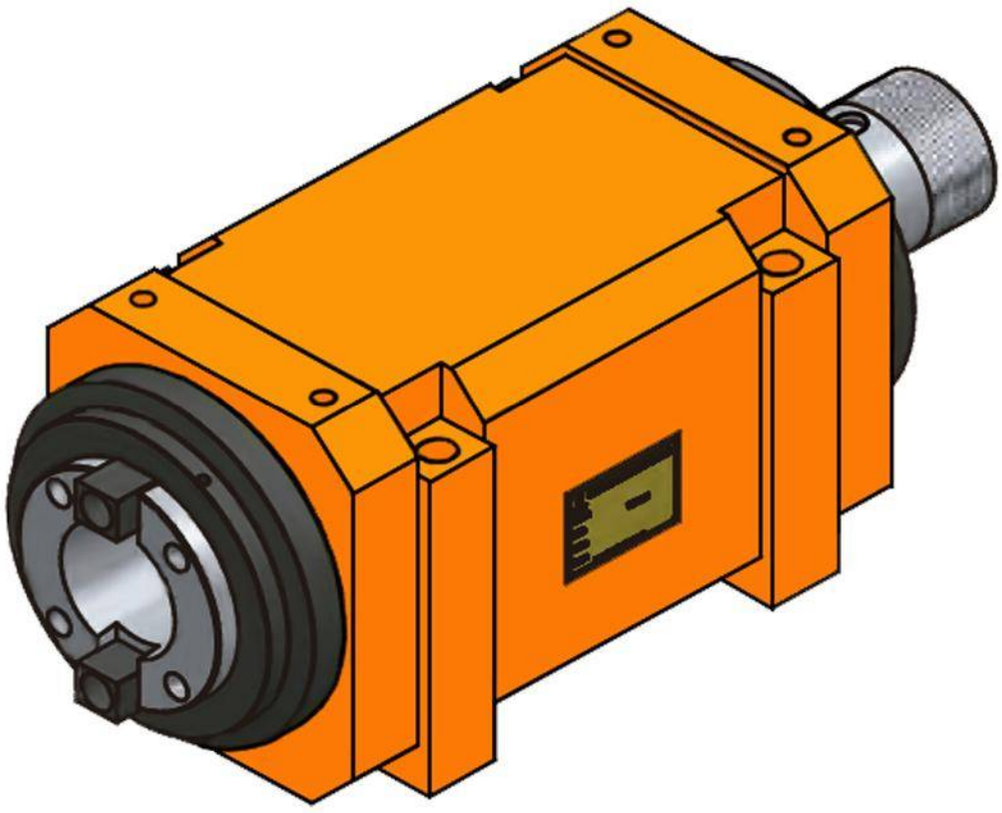

S80H-NT50
S80H-A2-5
S80H-FB75

TOTAL WEIGHT	84 Kg

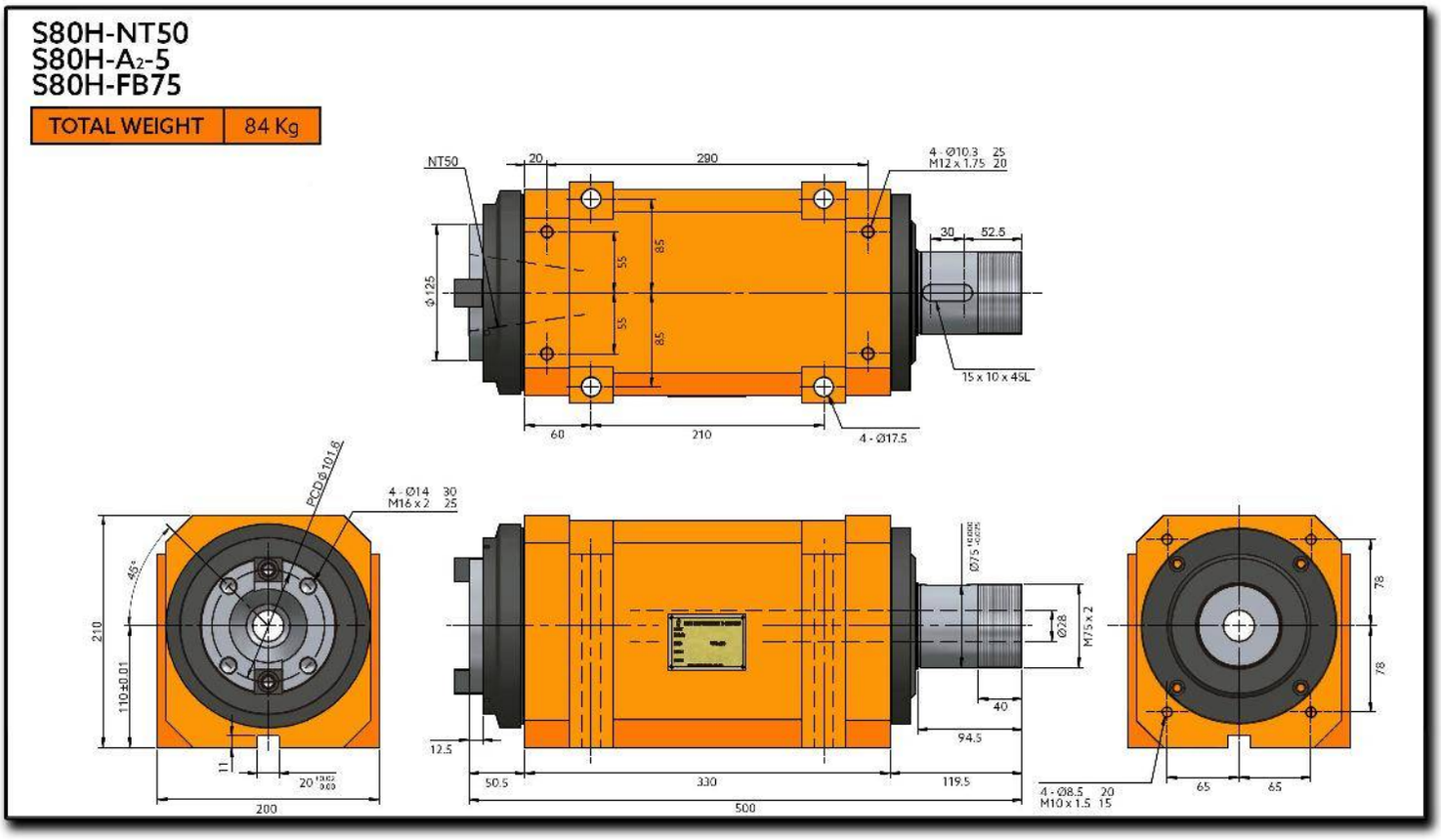

S80H-NT50
S80H-A2-5
S80H-FB75

TOTAL WEIGHT	84 Kg

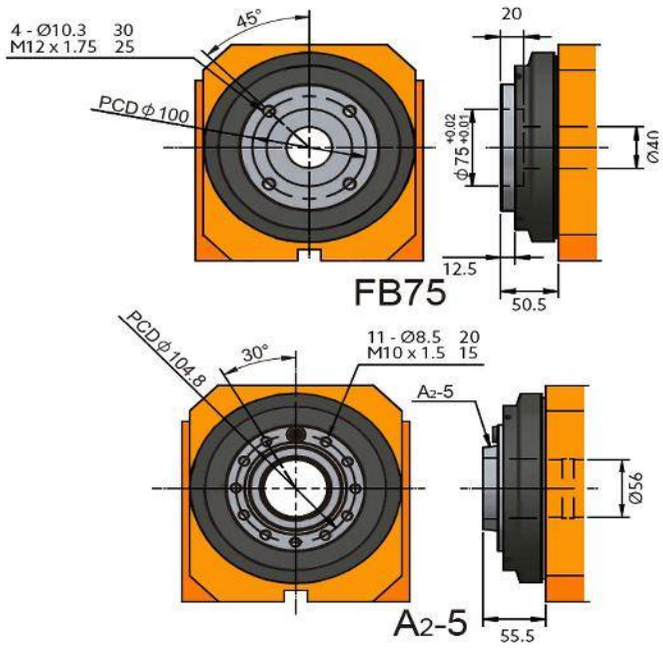

Characteristics & Dimensions

MODEL	S80H
Spindle Model	*NT50 - A_2-5 - FB75*
Maximum Speed (r.p.m.)	*3,000*
Bearings Model	*7216 x 4*
Maximum Power	*Within 7.5 H.p.*
Raising Temperature	*Within 20°C*

*** Roundness: Within 0.003 millimeters.
**** All dimensions are given in millimeters.

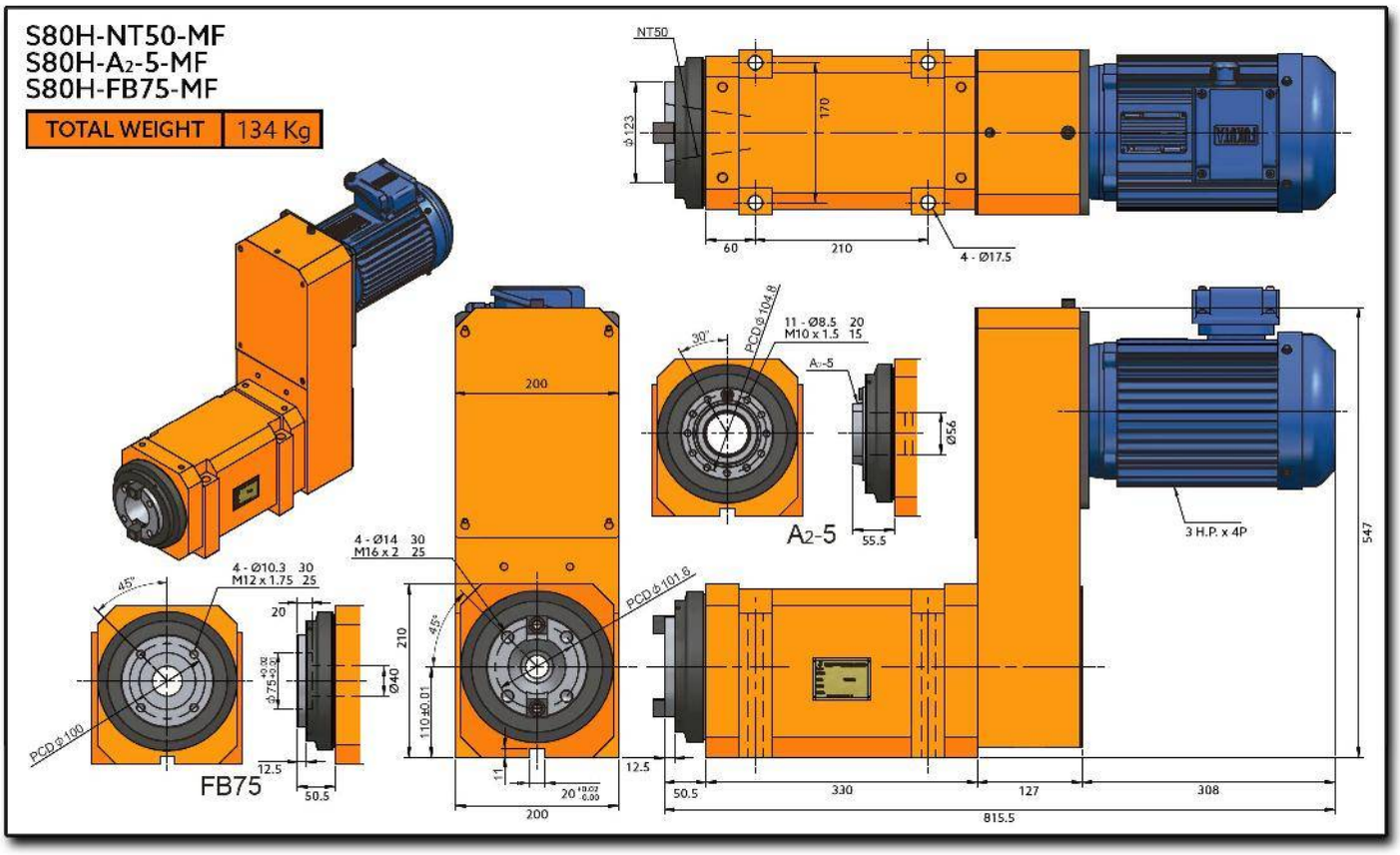
S80H-NT50-MF
S80H-A2-5-MF
S80H-FB75-MF
TOTAL WEIGHT
134 Kg
NT50
Φ123
170
60
210
4 - Ø17.5
200
PCD Φ104.8
11 - Ø8.5 20
M10 x 1.5 15
30°
A2-5
Ø56
55.5
3 H.P. x 4P
547
4 - Ø14 30
M16 x 2 25
4 - Ø10.3 30
M12 x 1.75 25
45°
20
Φ75
Ø40
PCD Φ100
FB75
12.5
50.5
210
110±0.01
PCD Φ101.8
11
20
200
12.5
50.5
330
127
308
815.5

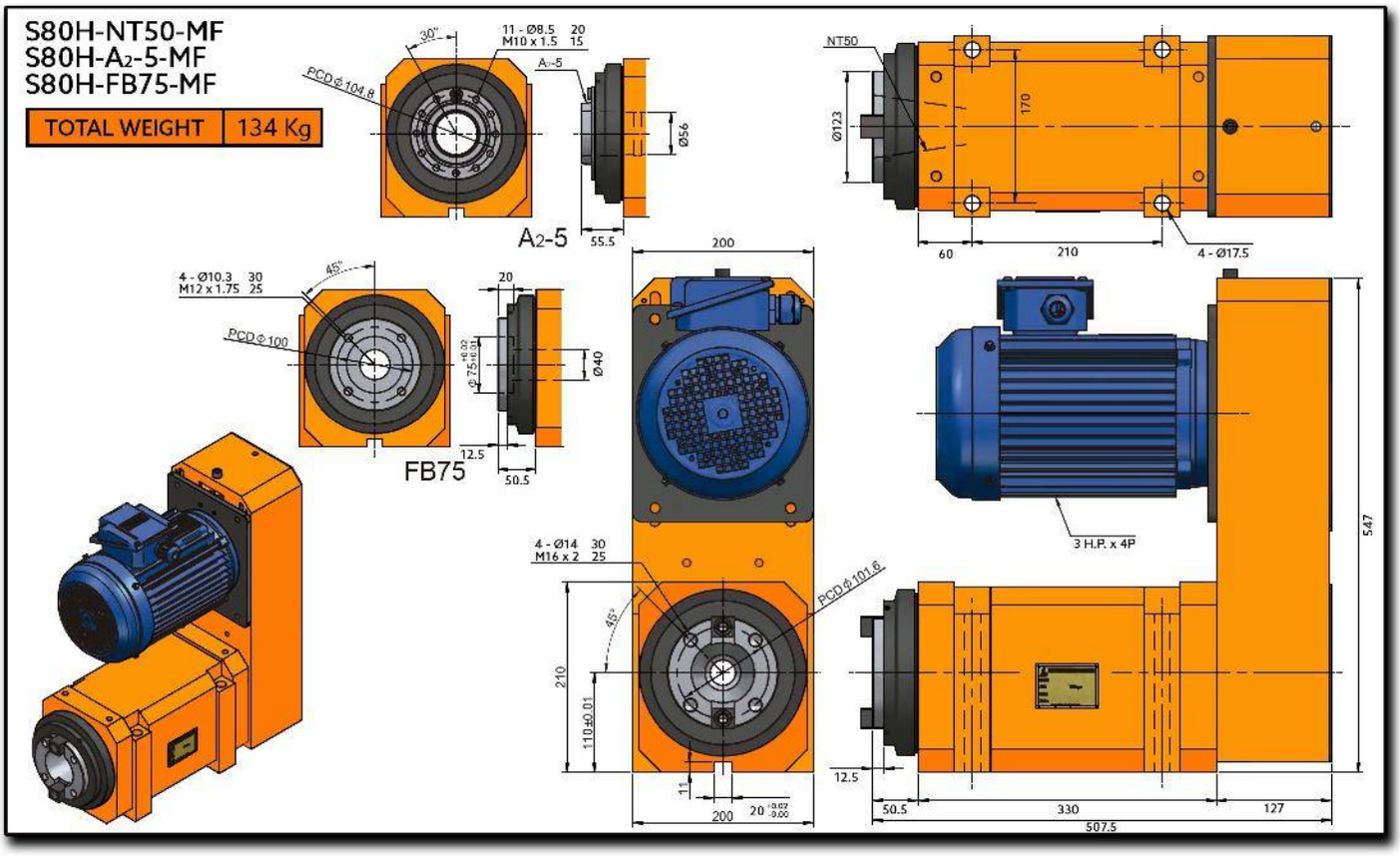
S80H-NT50-MF
S80H-A2-5-MF
S80H-FB75-MF
TOTAL WEIGHT
134 Kg
A2-5
FB75
NT50
3 H.P. x 4P
547
507.5

S100

Boring/Milling Spindle Head

(Machinig Process Unit)

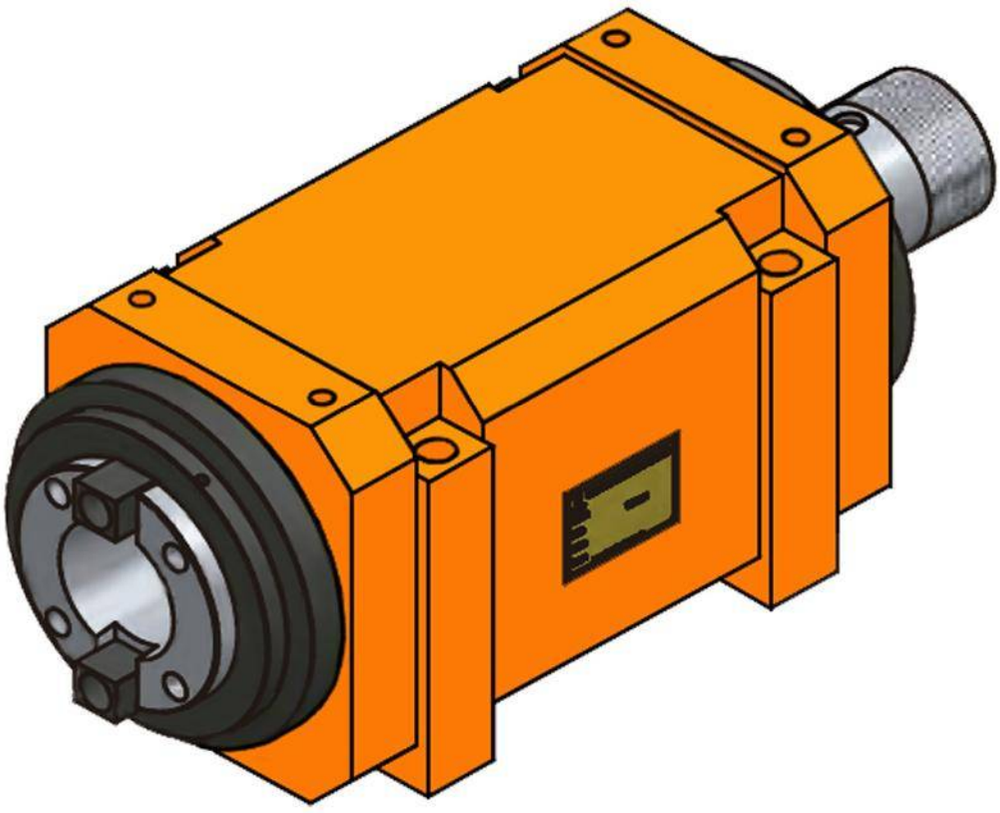

S100-NT50
S100-A2-6

TOTAL WEIGHT	250 Kg

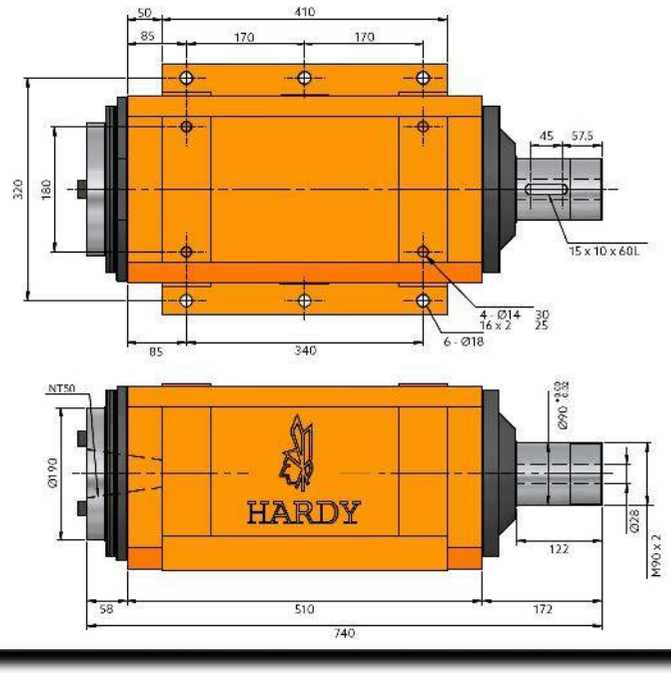

S100-NT50
S100-A2-6

TOTAL WEIGHT	250 Kg

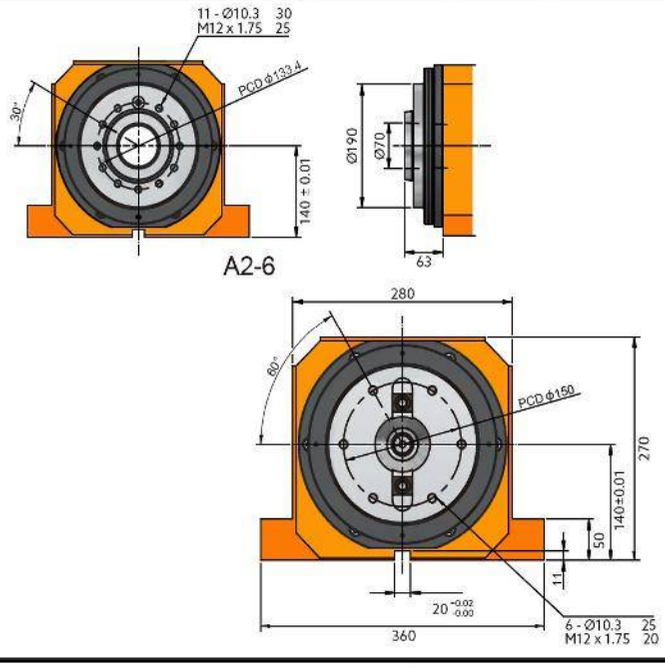

Characteristics & Dimensions

MODEL	S100
Spindle Model	*NT50 - A_2-6 - FB75*
Maximum Speed (r.p.m.)	*800*
Bearings Model	*6220Z x 2* *32220 x 2*
Maximum Power	*Within 15 H.p.*
Raising Temperature	*Within 20°C*

**** Roundness: Within 0.003 millimeters.*
***** All dimensions are given in millimeters.*

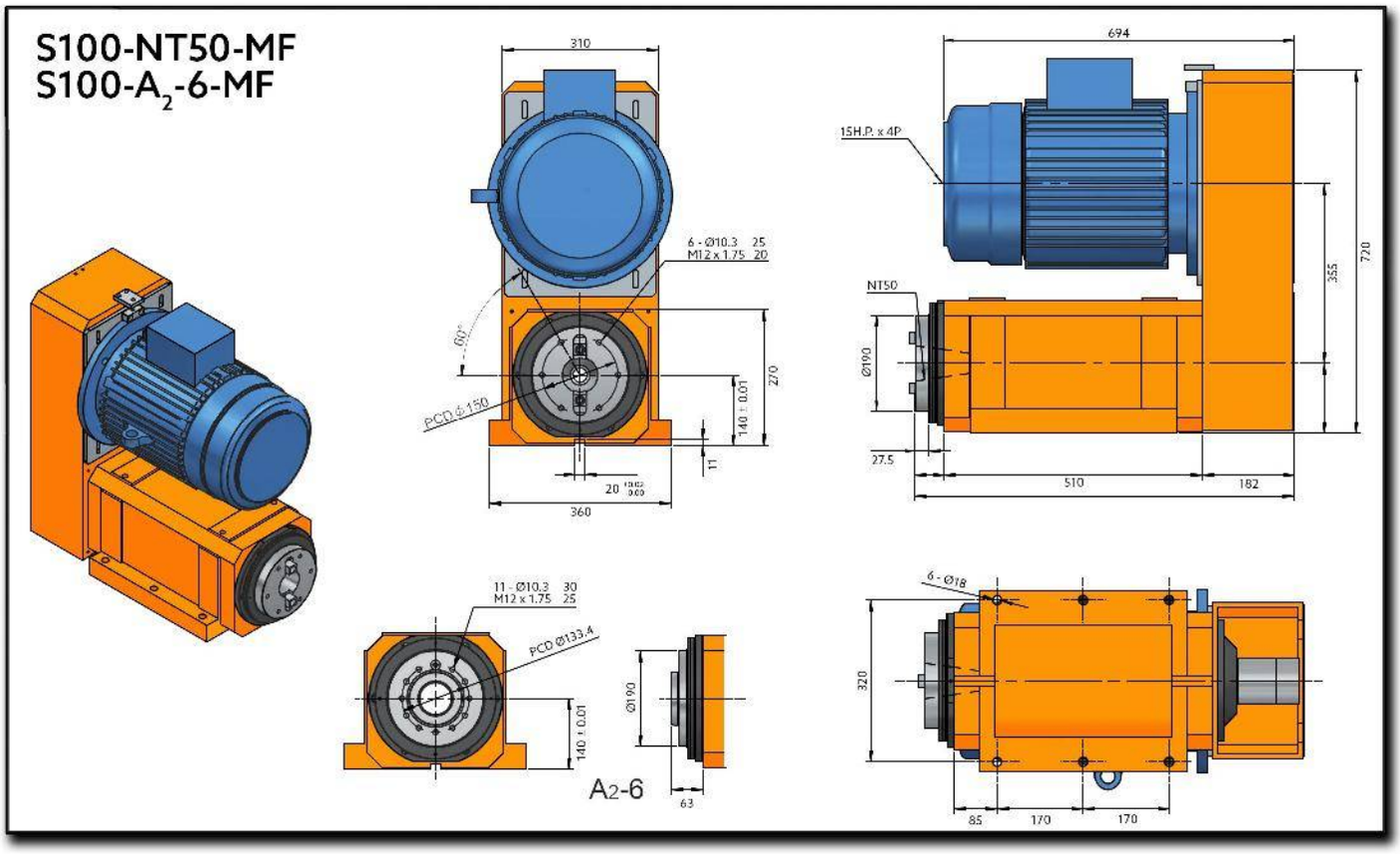
S100-NT50-MF
S100-A2-6-MF
310
694
15H.P. x 4P
6 - Ø10.3 25
M12 x 1.75 20
60°
PCD Ø150
140 ± 0.01
270
11
360
NT50
Ø190
355
720
27.5
510
182
11 - Ø10.3 30
M12 x 1.75 25
PCD Ø133.4
140 ± 0.01
Ø190
63
A2-6
6 - Ø18
320
85
170
170

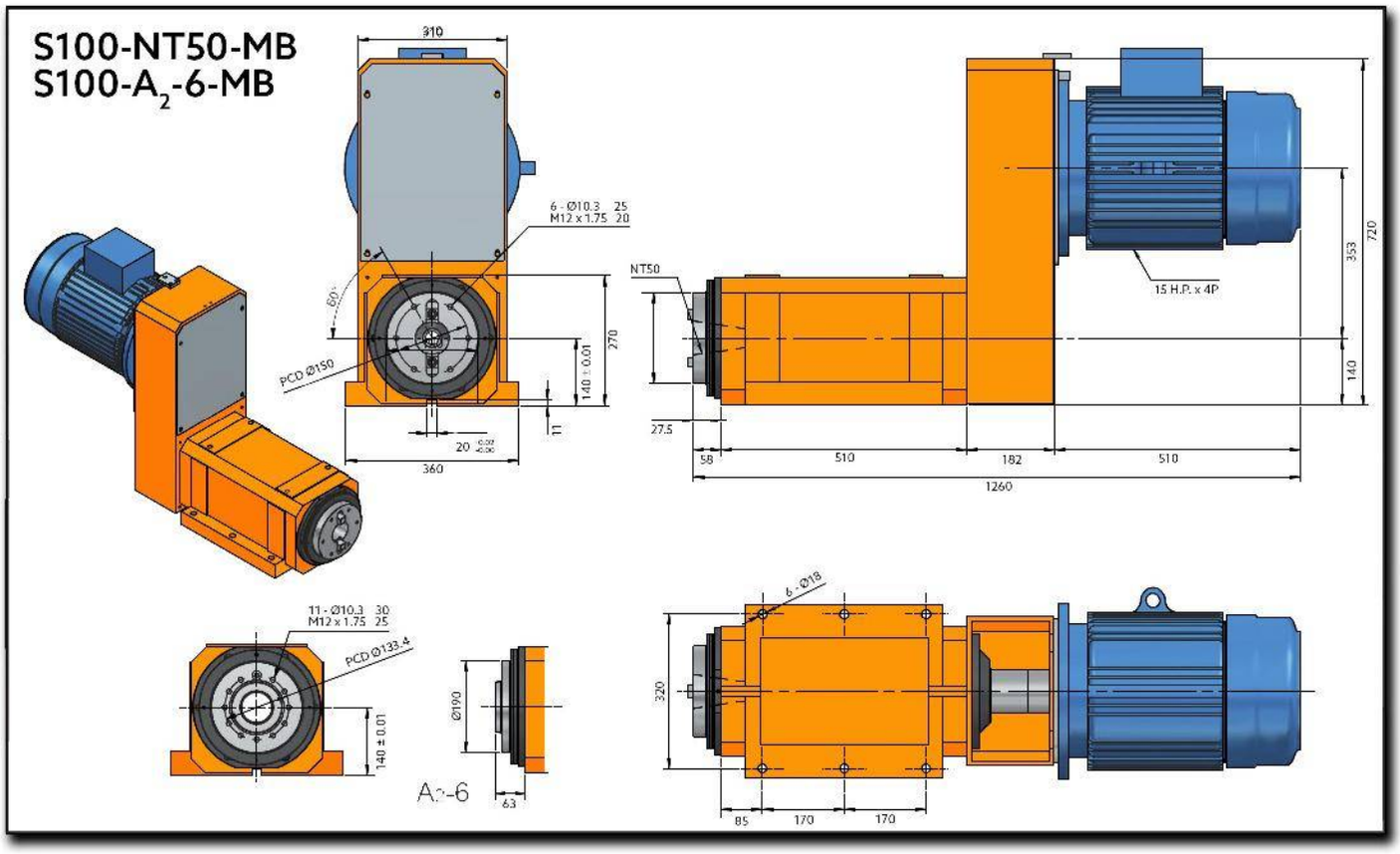
S100-NT50-MB
S100-A2-6-MB
310
6 - Ø10.3 25
M12 x 1.75 20
60°
PCD Ø150
270
140 ± 0.01
11
20
360
NT50
15 H.P. x 4P
720
353
140
27.5
58
510
182
510
1260
11 - Ø10.3 30
M12 x 1.75 25
PCD Ø133.4
140 ± 0.01
Ø190
63
6 - Ø18
320
85
170
170

S100H

High Performance Boring/Milling Spindle Head

(Machinig Process Unit)

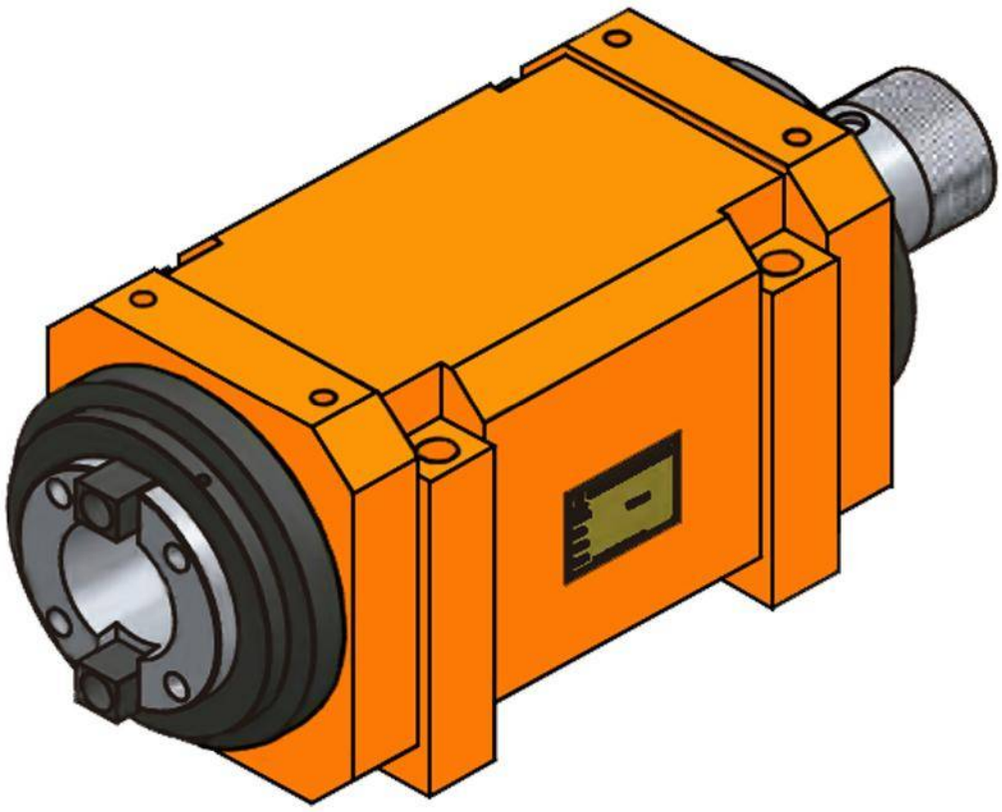

S100H-NT50
S100H-A2-6

TOTAL WEIGHT	250 Kg

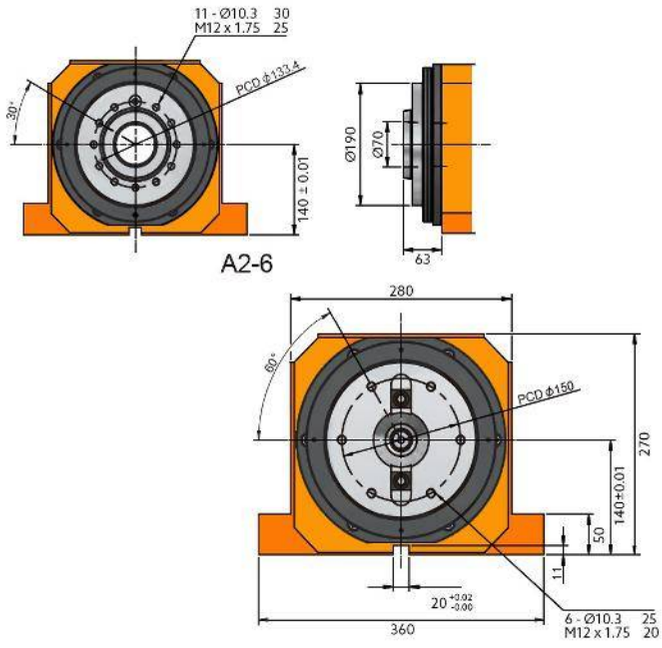

S100H-NT50
S100H-A2-6

TOTAL WEIGHT	250 Kg

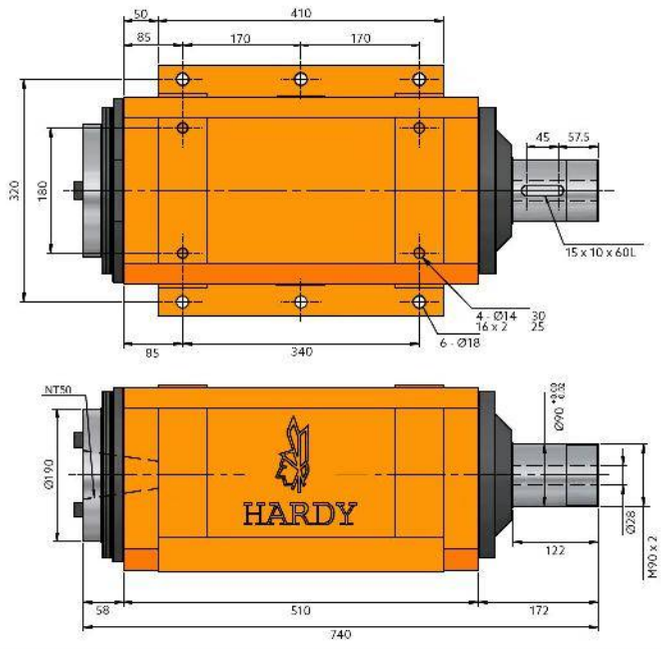

Characteristics & Dimensions

MODEL	S100H
Spindle Model	*NT50 - A_2-6 - FB75*
Maximum Speed (r.p.m.)	*2,500*
Bearings Model	*7220 x 4*
Maximum Power	*Within 15 H.p.*
Raising Temperature	*Within 20°C*

**** Roundness: Within 0.003 millimeters.*
***** All dimensions are given in millimeters.*

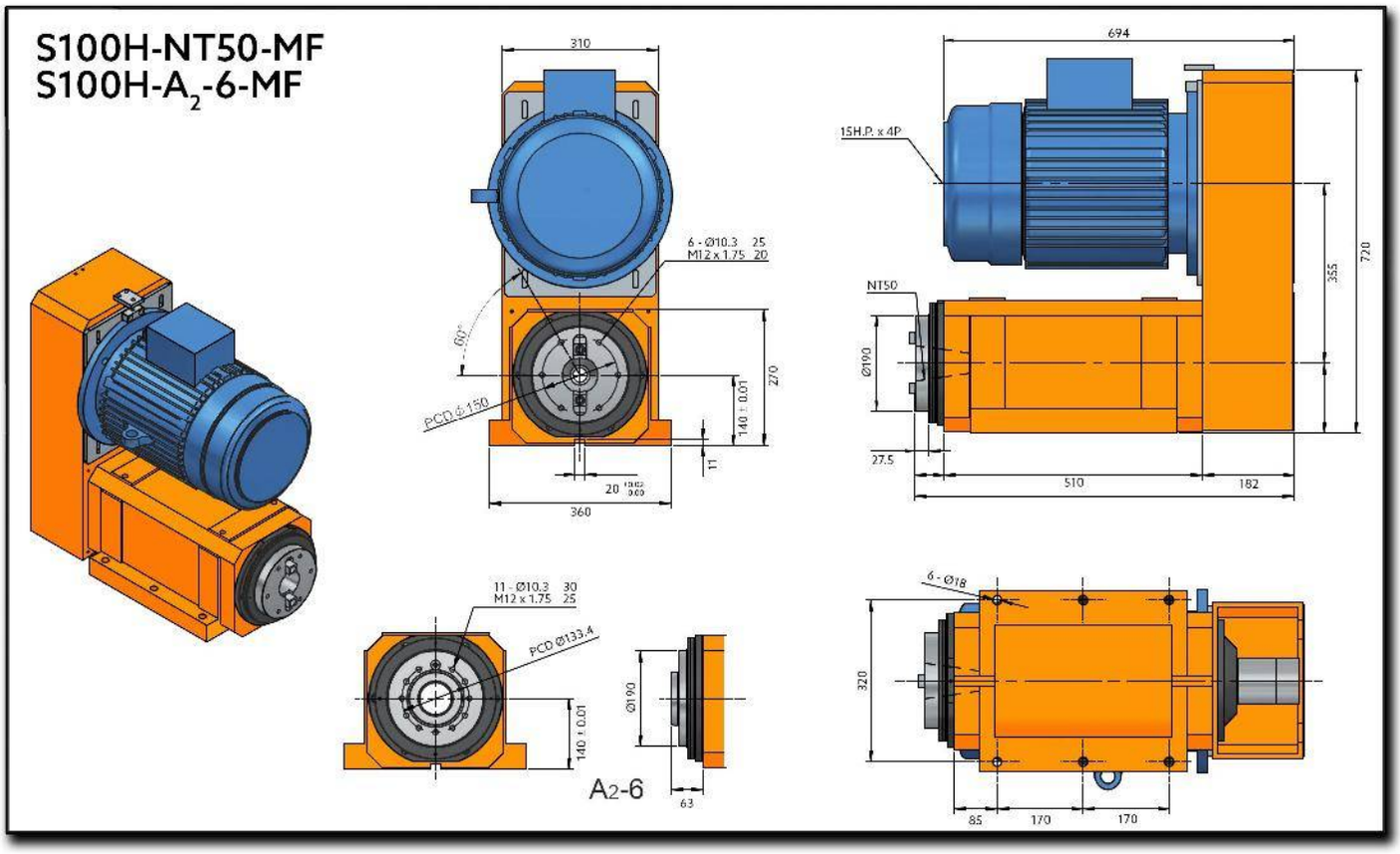
S100H-NT50-MF
S100H-A2-6-MF
310
6 - Ø10.3 25
M12 x 1.75 20
60°
PCD Ø150
140 ± 0.01
270
11
360
694
15H.P. x 4P
720
355
NT50
Ø190
27.5
510
182
11 - Ø10.3 30
M12 x 1.75 25
PCD Ø133.4
140 ± 0.01
Ø190
63
A2-6
6 - Ø18
320
85
170
170

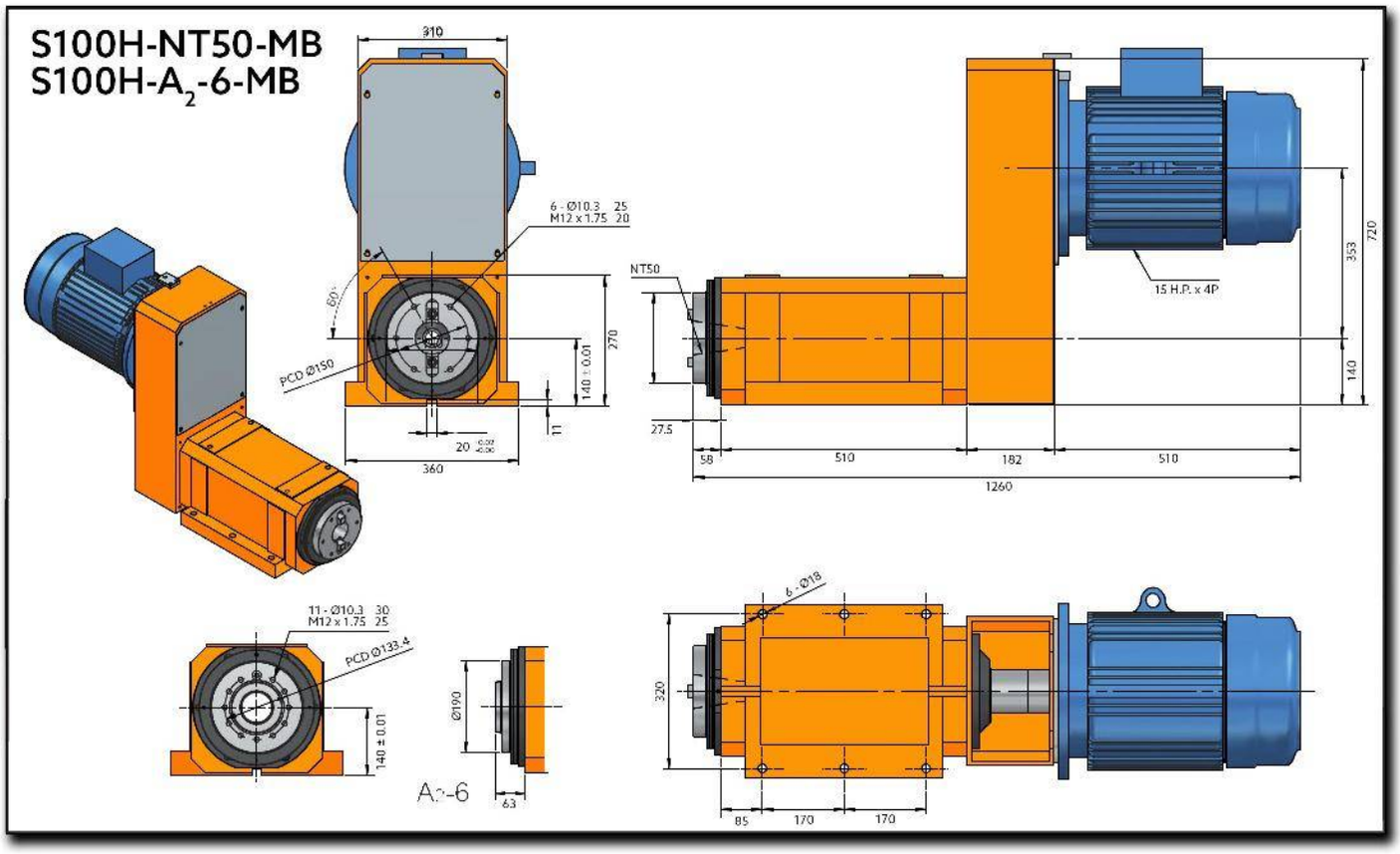
S100H-NT50-MB
S100H-A2-6-MB
310
6 - Ø10.3 25
M12 x 1.75 20
60°
PCD Ø150
270
140 ± 0.01
11
20
360
NT50
15 H.P. x 4P
720
353
140
27.5
58
510
182
510
1260
11 - Ø10.3 30
M12 x 1.75 25
PCD Ø133.4
140 ± 0.01
Ø190
63
6 - Ø18
320
85
170
170

S120

Boring/Milling Spindle Head

(Machinig Process Unit)

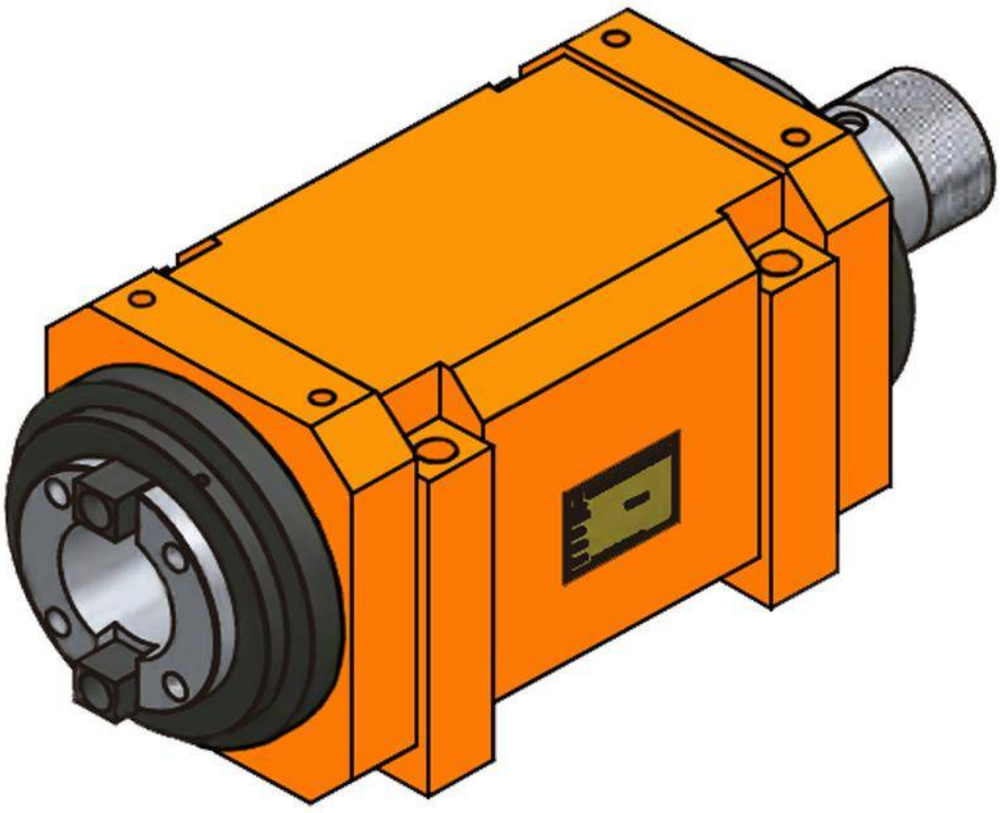

S120-NT50
S120-A2-6

TOTAL WEIGHT	250 Kg

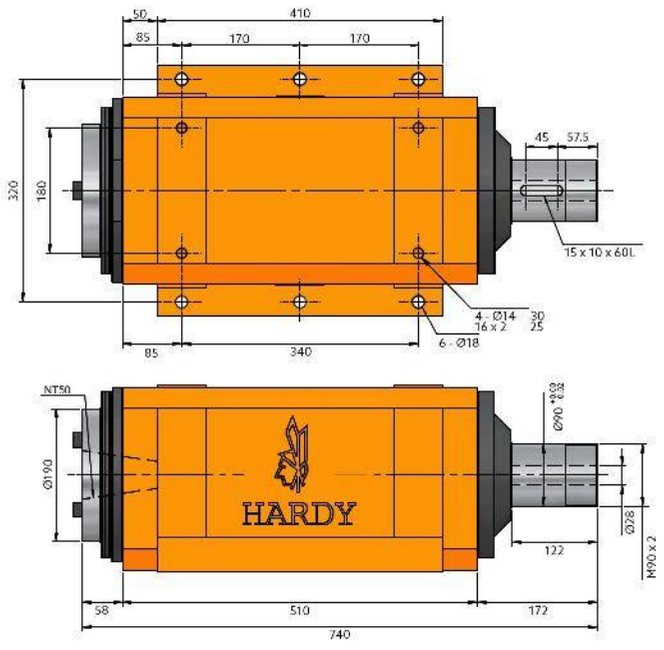

S120-NT50
S120-A2-6

TOTAL WEIGHT	250 Kg

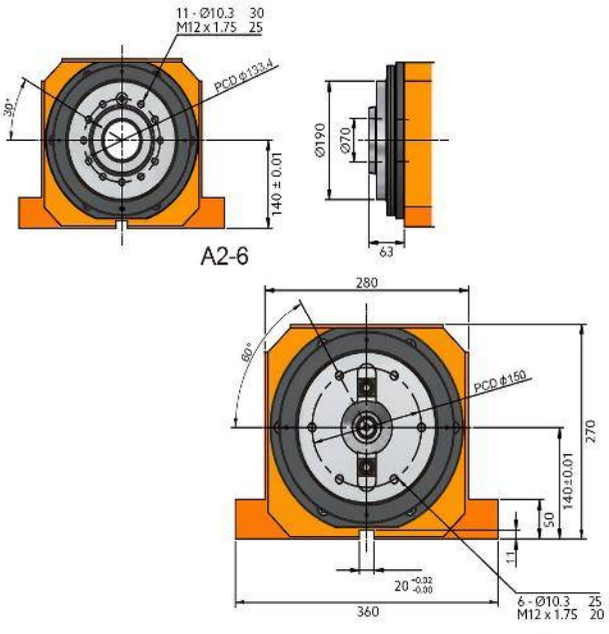

Characteristics & Dimensions

MODEL	S120
Spindle Model	*NT50 - A_2-6*
Maximum Speed (r.p.m.)	*600*
Bearings Model	*6224Z x 2* *32224 x 2*
Maximum Power	*Within 20 H.p.*
Raising Temperature	*Within 20°C*

**** Roundness: Within 0.003 millimeters.*
***** All dimensions are given in millimeters.*

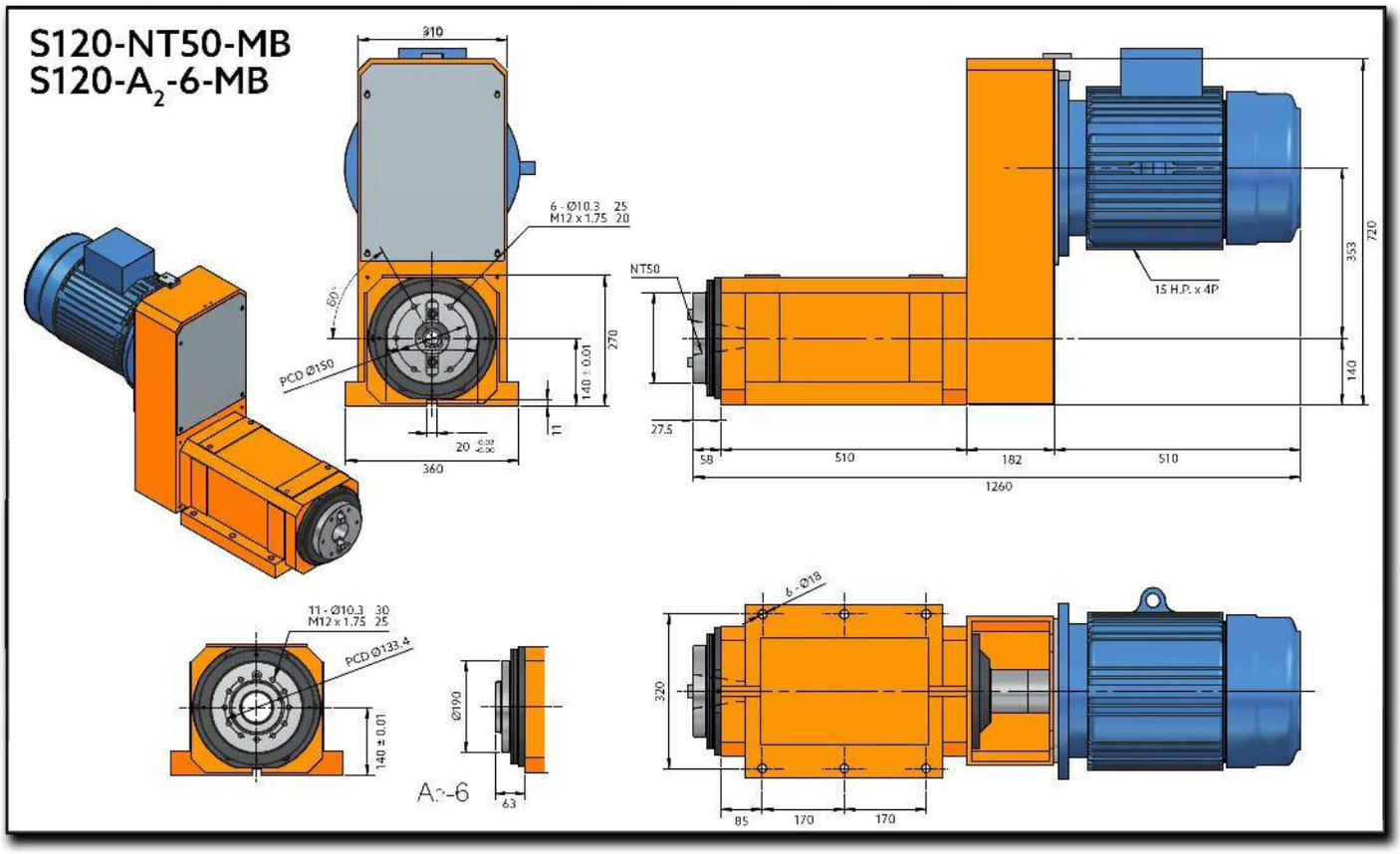
S120-NT50-MB
S120-A2-6-MB
310
6 - Ø10.3 25
M12 x 1.75 20
60°
PCD Ø150
270
140 ± 0.01
11
20
360
NT50
15 H.P. x 4P
720
353
140
27.5
58
510
182
510
1260
11 - Ø10.3 30
M12 x 1.75 25
PCD Ø133.4
140 ± 0.01
Ø190
63
6 - Ø18
320
85
170
170

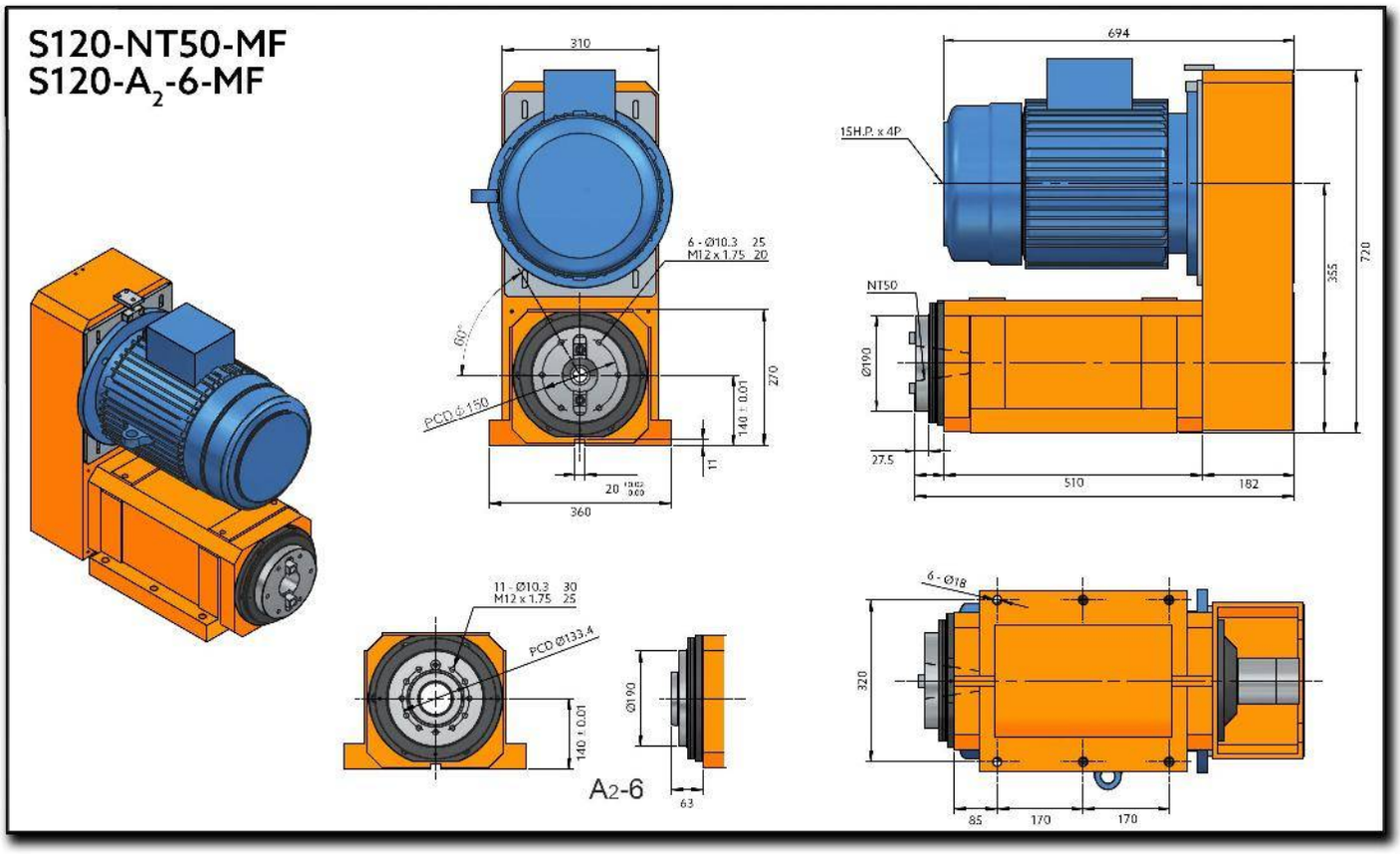
S120-NT50-MF
S120-A2-6-MF
310
694
15H.P. x 4P
6 - Ø10.3 25
M12 x 1.75 20
60°
PCD Ø150
140 ± 0.01
270
11
360
NT50
Ø190
355
720
27.5
510
182
11 - Ø10.3 30
M12 x 1.75 25
PCD Ø133.4
140 ± 0.01
Ø190
63
A2-6
6 - Ø18
320
85
170
170

S120H

High Performance Boring/Milling Spindle Head

(Machinig Process Unit)

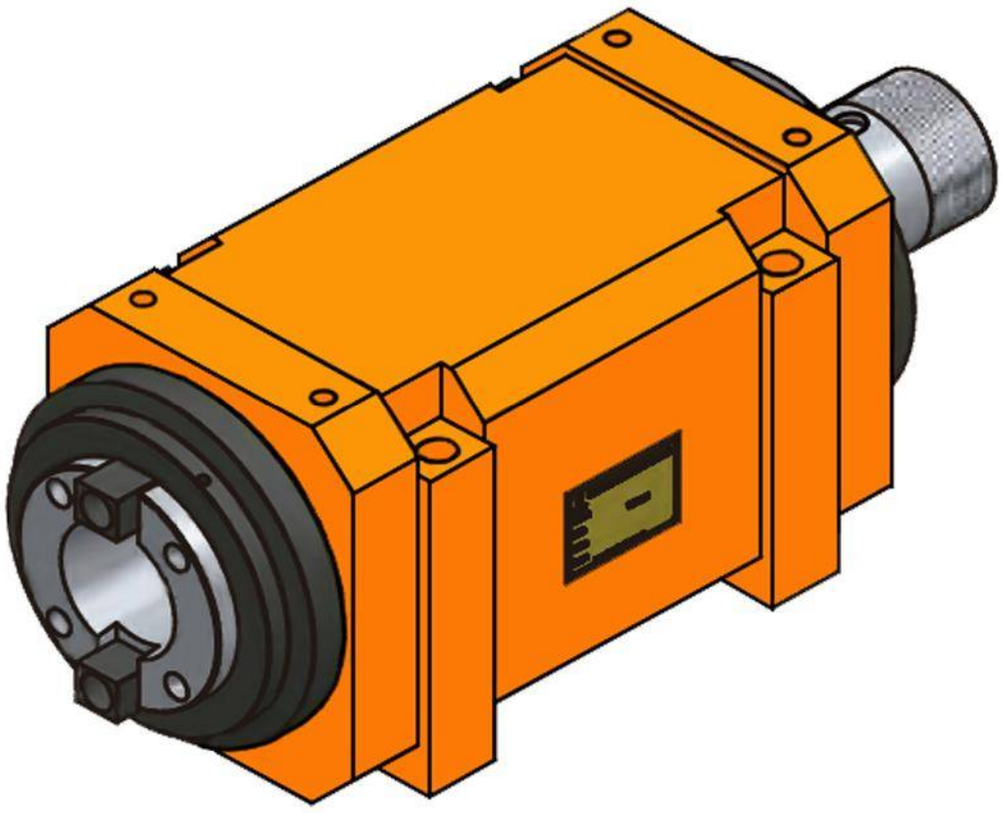

S120H-NT50
S120H-A2-6

TOTAL WEIGHT	250 Kg

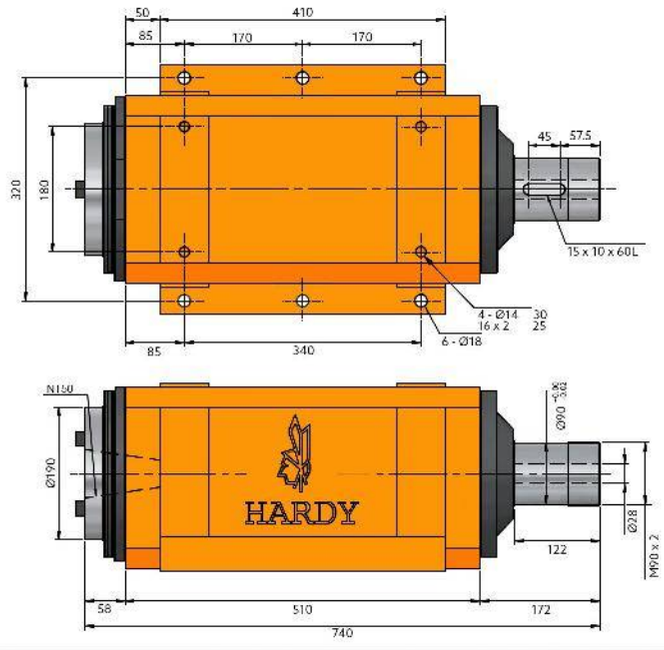

S120H-NT50
S120H-A2-6

TOTAL WEIGHT	250 Kg

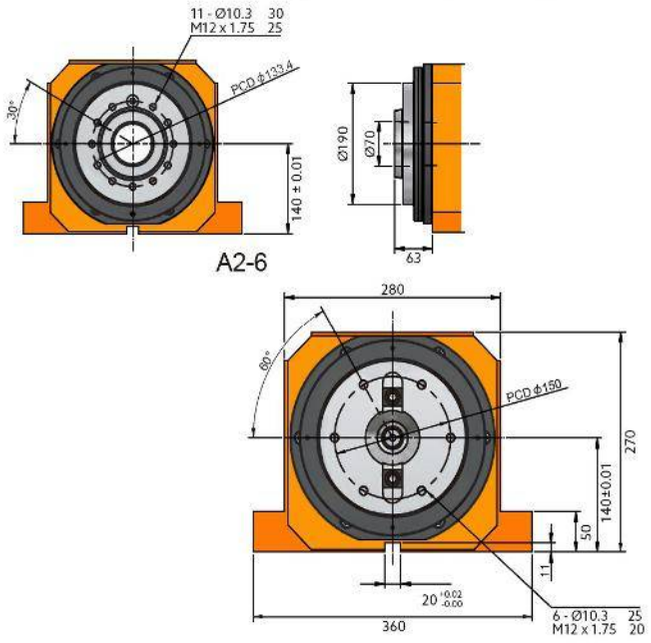

Characteristics & Dimensions

MODEL	S120H
Spindle Model	*NT50 - A_2-6*
Maximum Speed (r.p.m.)	*2,000*
Bearings Model	*7224 x 4*
Maximum Power	*Within 20 H.p.*
Raising Temperature	*Within 20°C*

**** Roundness: Within 0.003 millimeters.*
***** All dimensions are given in millimeters.*

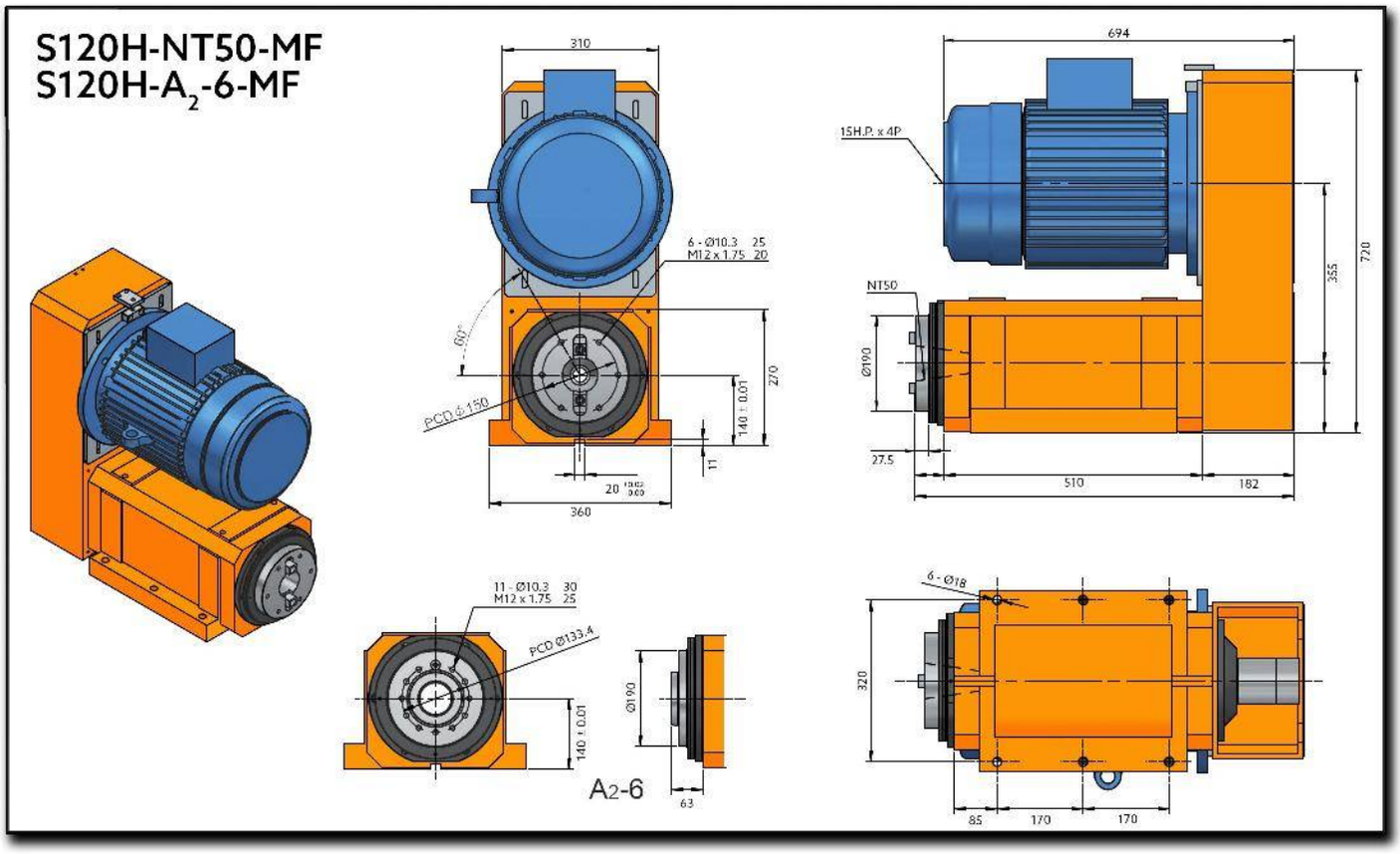
S120H-NT50-MF
S120H-A2-6-MF
310
694
15H.P. x 4P
6 - Ø10.3 25
M12 x 1.75 20
60°
PCD Ø150
140 ± 0.01
270
11
360
NT50
Ø190
355
720
27.5
510
182
11 - Ø10.3 30
M12 x 1.75 25
PCD Ø133.4
140 ± 0.01
Ø190
63
A2-6
6 - Ø18
320
85
170
170

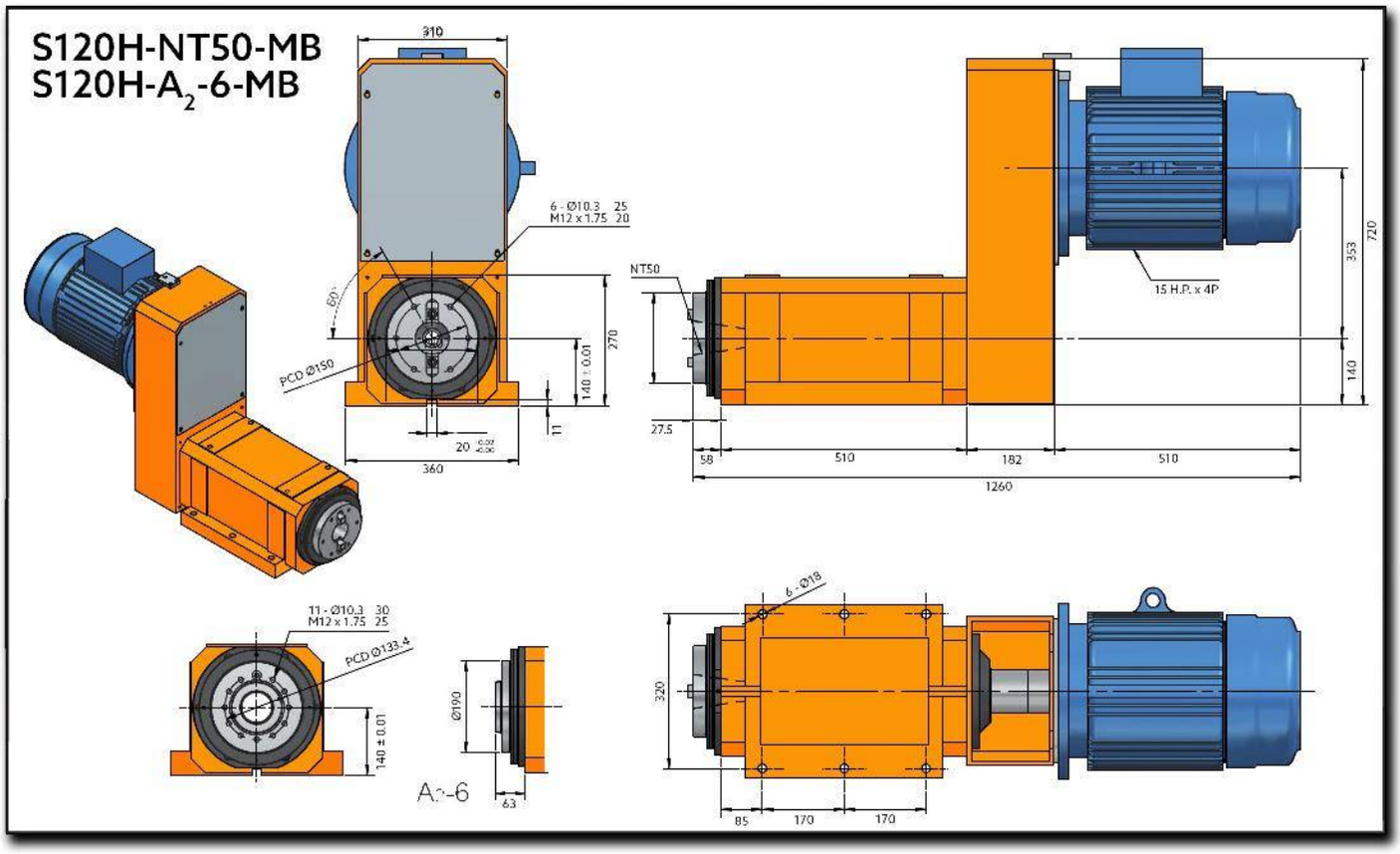
S120H-NT50-MB
S120H-A2-6-MB
310
6 - Ø10.3 25
M12 x 1.75 20
60°
PCD Ø150
270
140 ± 0.01
11
20
360
NT50
15 H.P. x 4P
720
353
140
27.5
58
510
182
510
1260
11 - Ø10.3 30
M12 x 1.75 25
PCD Ø133.4
140 ± 0.01
Ø190
63
6 - Ø18
320
85
170
170

S150
Boring & Milling Spindle Head

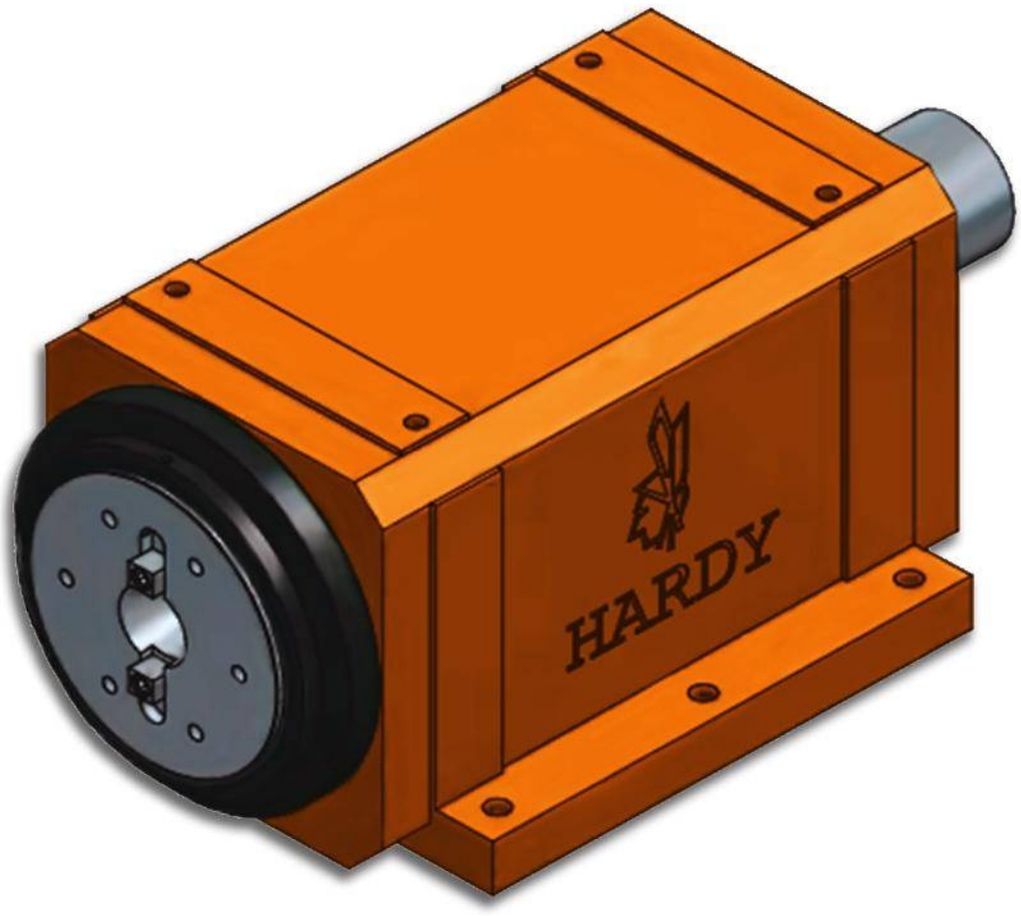

S150-NT50

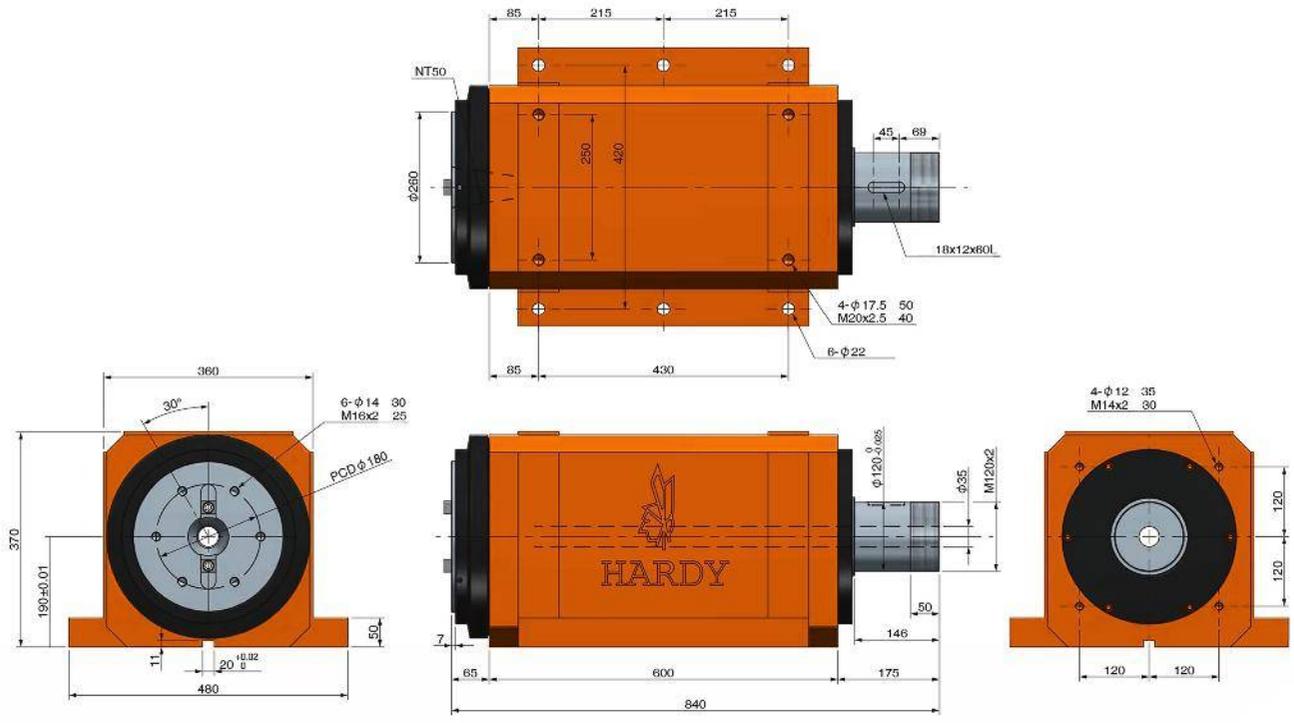
85
215
215
NT50
Φ260
250
420
45
69
18x12x60L
4-Φ17.5 50
M20x2.5 40
6-Φ22
85
430
360
30°
6-Φ14 30
M16x2 25
PCD Φ180
370
190±0.01
50
11
480
HARDY
Φ120 0 -0.035
Φ35
M120x2
50
7
146
65
600
175
840
4-Φ12 35
M14x2 30
120
120
120
120

Characteristics & Dimensions

MODEL	S150
Spindle Head Model	*NT50*
Maximum Spindle Speed *(r.p.m.)*	*500.00*
Spindle Bearings	*32230 / 6230Z* *3228 / 6228Z*
Maximum Spindle Power *(3 Phases)*	*Within 20 H.P.*
Rising Temperature	*Within 20° C*

**** Roundness: ≤ 0.003 mm.*
***** All dimensions are given in millimeters.*

S150-NT50-MF

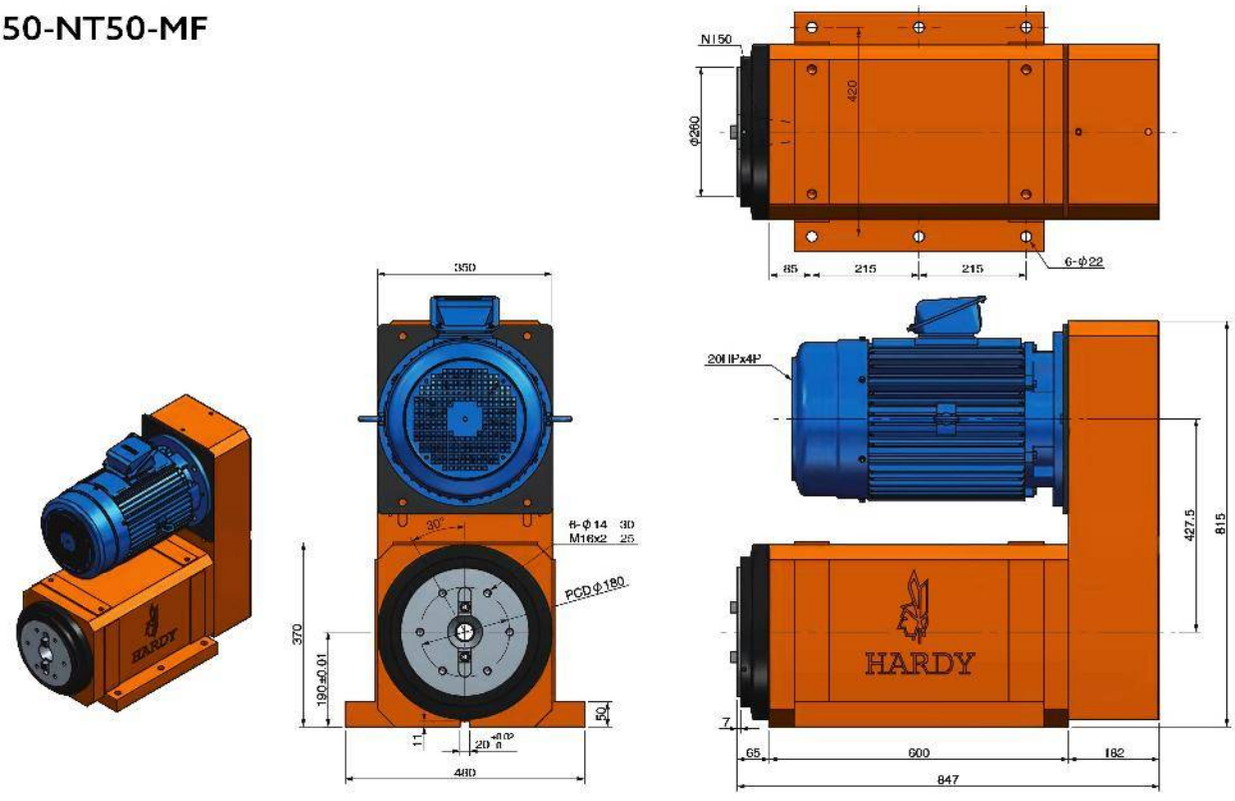

N150
420
Φ260
85
215
215
6-Φ22
350
20HPx4P
30°
6-Φ14 30
M16x2 25
PCD Φ180
370
190±0.01
50
11
20
480
427.5
815
HARDY
7
65
600
182
847

S150-NT50-MB

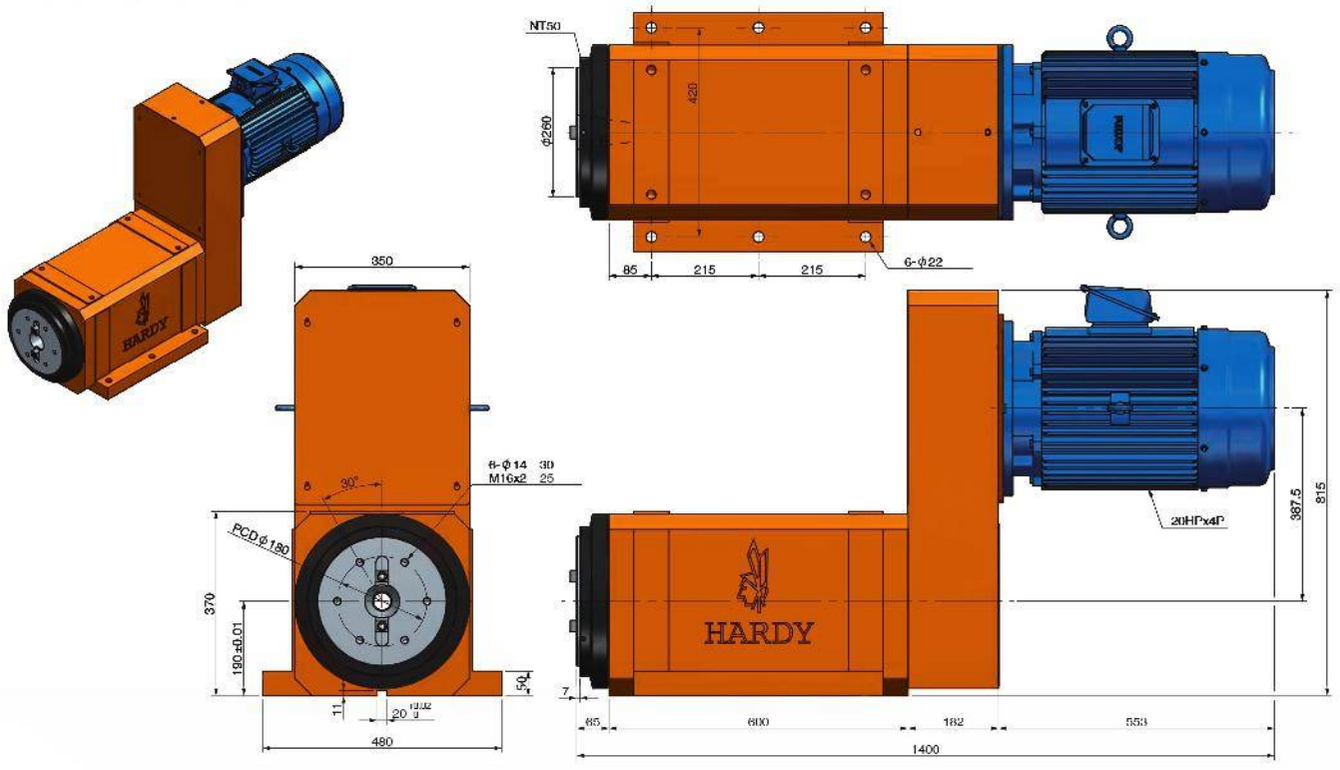
NT50
Φ260
420
85
215
215
6-Φ22
350
30°
6-Φ14 30
M16x2 25
PCD Φ180
370
190±0.01
50
11
20
480
7
600
182
553
1400
387.5
815
20HPx4P
HARDY

S150H
High Performance Boring & Milling Spindle Head

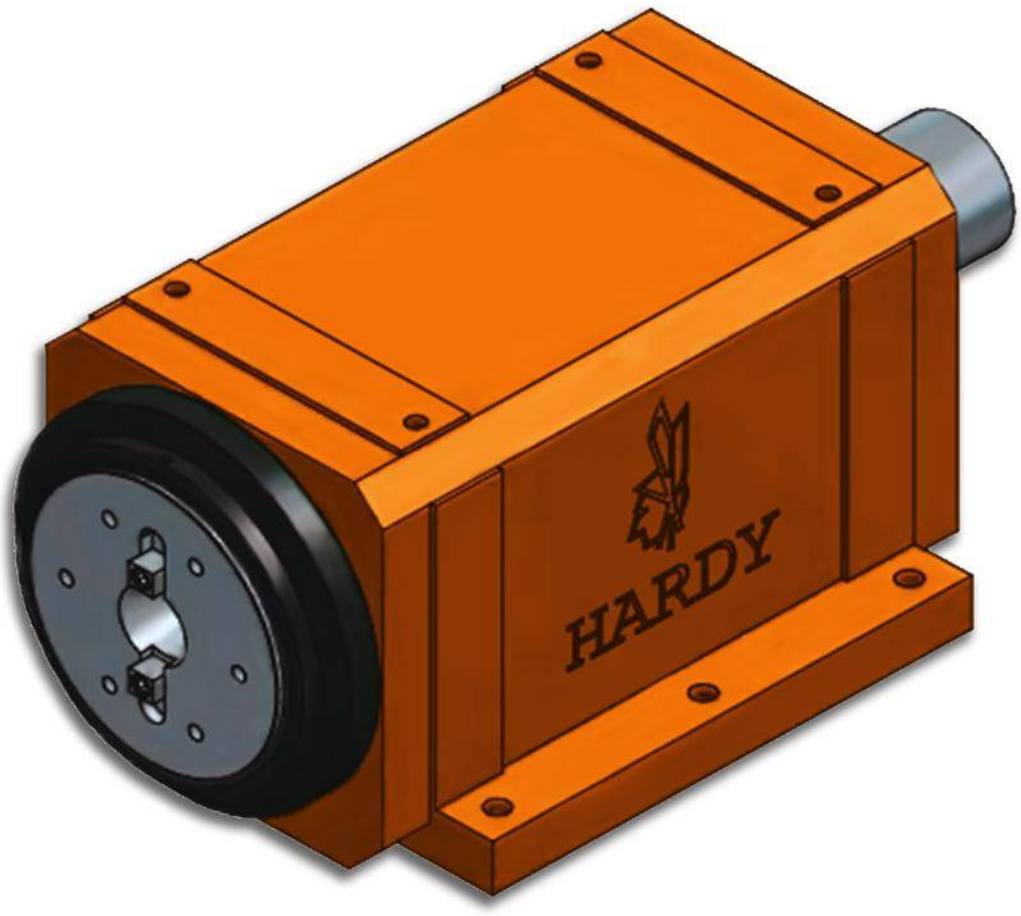

S150H-NT50

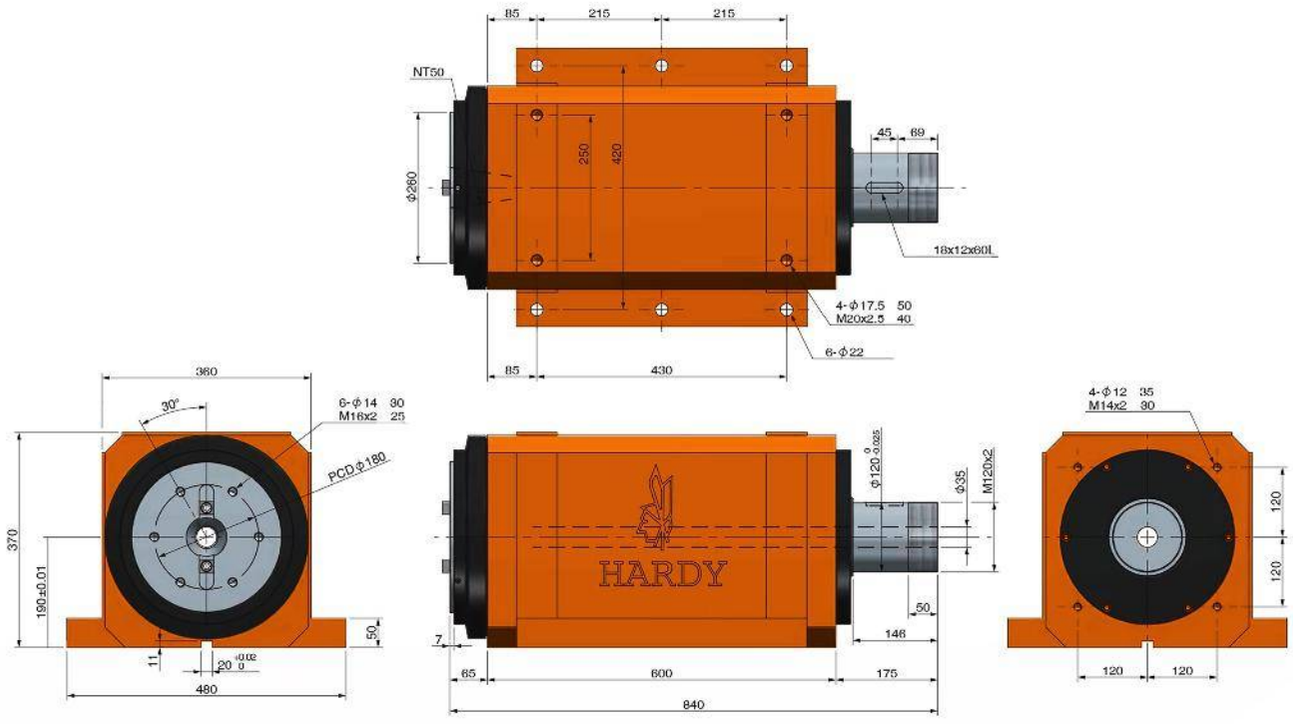
85
215
215
NT50
250
420
ϕ260
45
69
18x12x60L
4-ϕ17.5 50
M20x2.5 40
6-ϕ22
85
430
360
30°
6-ϕ14 30
M16x2 25
PCDϕ180
370
190±0.01
50
11
20
480
HARDY
ϕ120
ϕ35
M120x2
50
146
7
65
600
175
840
4-ϕ12 35
M14x2 30
120
120
120
120

Characteristics & Dimensions

MODEL	S150H
Spindle Head Model	*NT50*
Maximum Spindle Speed *(r.p.m.)*	*1,800.00*
Spindle Bearings	*7230 x 2* *7228 x 2*
Maximum Spindle Power *(3 Phases)*	*Within 20 H.P.*
Rising Temperature	*Within 20° C*

**** Roundness: ≤ 0.003 mm.*
***** All dimensions are given in millimeters.*

S150H-NT50-MF

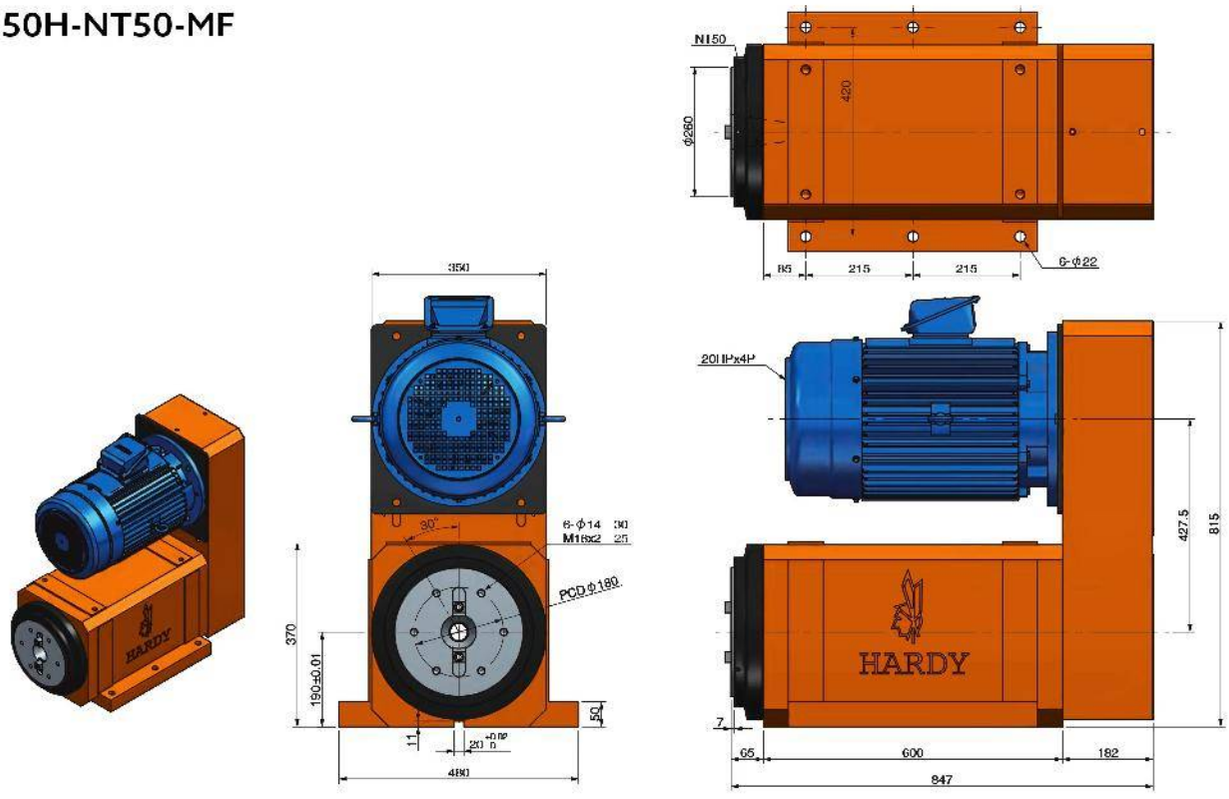

S150H-NT50-MB

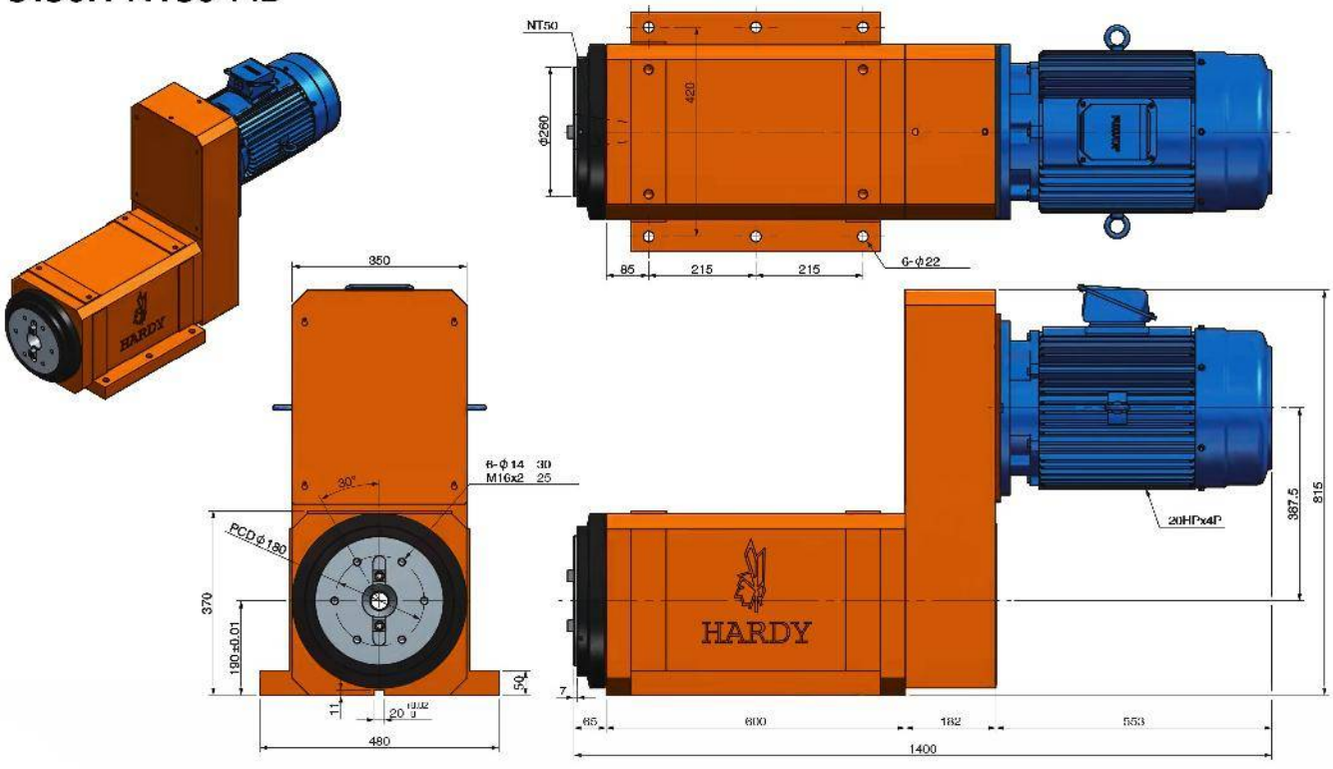

SC & SCS SERIES

FACING SERVO SPINDLE HEADS WITH AUTOMATIC TOOL CHANGER SYSTEM

SC55-BT40

Boring & Millind Spindle Head With Automatic Loading/Unloading Tool System

(Backward Configuration)

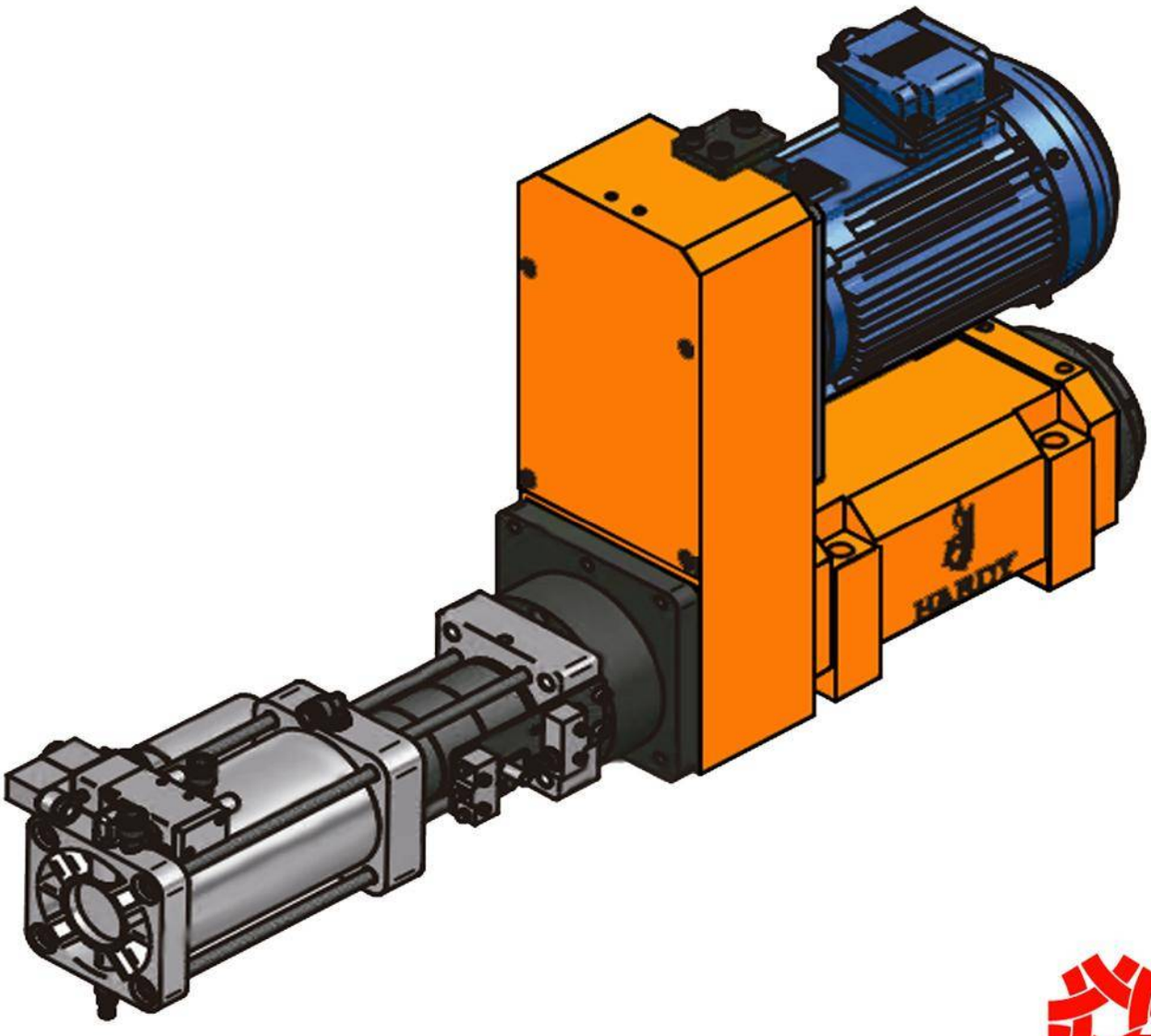

台灣精品 2017
TAIWAN EXCELLENCE

Characteristics & Dimensions

MODEL	SC55
Spindle Tool Type	*BT40*
Maximum Spindle Speed (r.p.m.)	*2,000*
Bearings	*32011 | 32010 | 6011Z | 6010Z*
Roundness	*Within 0.003 mm.*
Maximum Power Handling	*3.0 H.p.*
Rising Temperature	*Within de 20°C*

*** All dimensions are given in millimeters*

SC55-BT40-MF

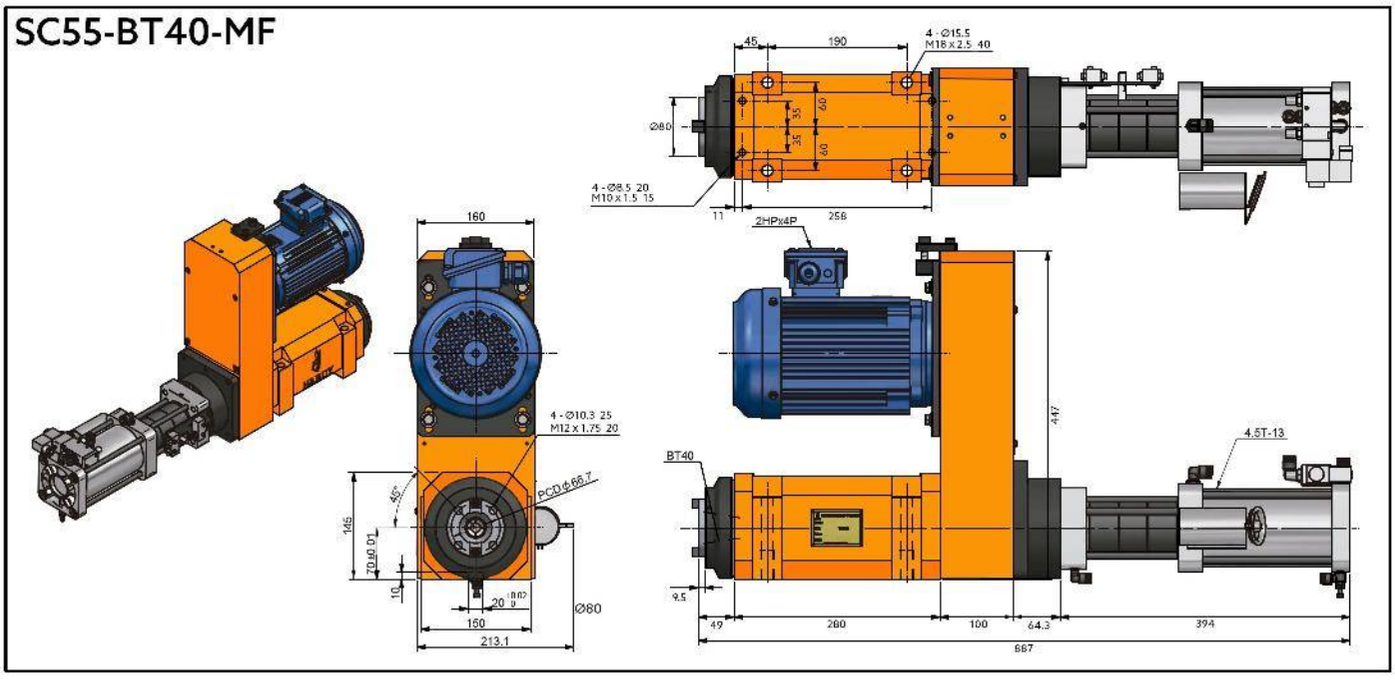

SC55-BT40-MB

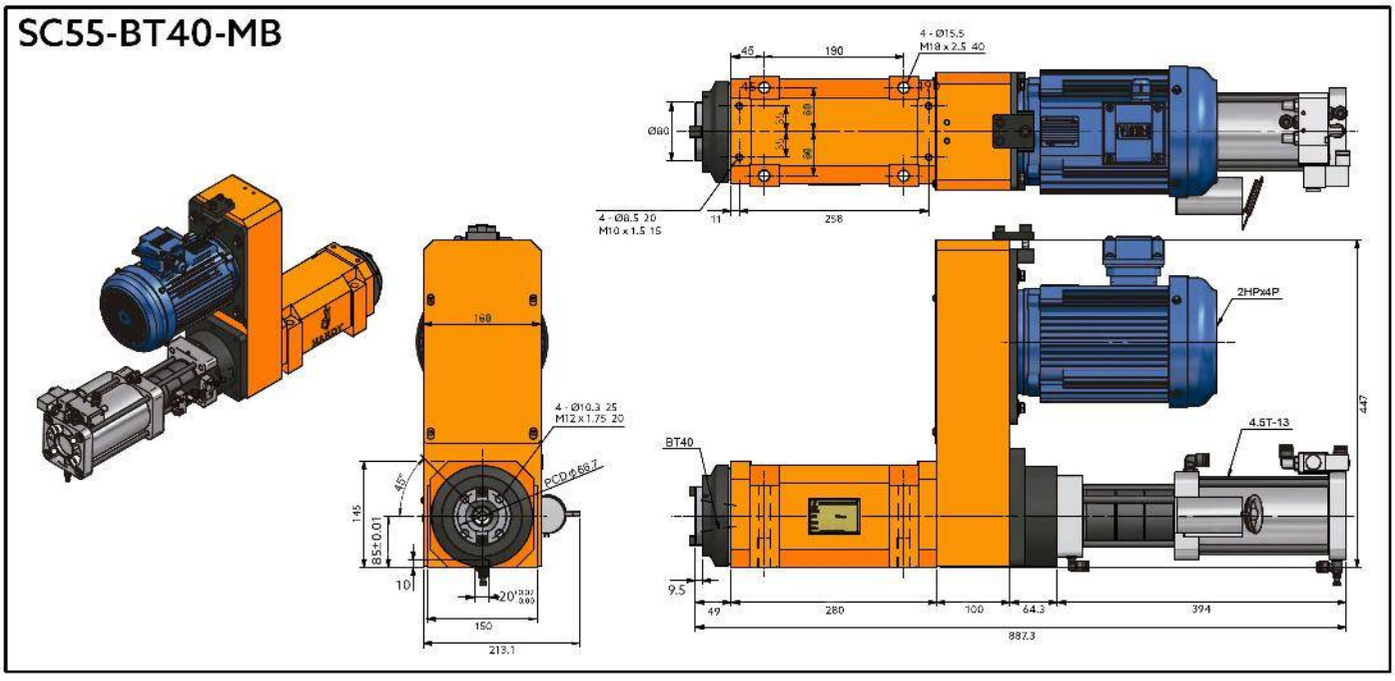

SC55H-BT40

Boring & Millind Spindle Head With Automatic Loading/Unloading Tool System

(Backward Configuration)

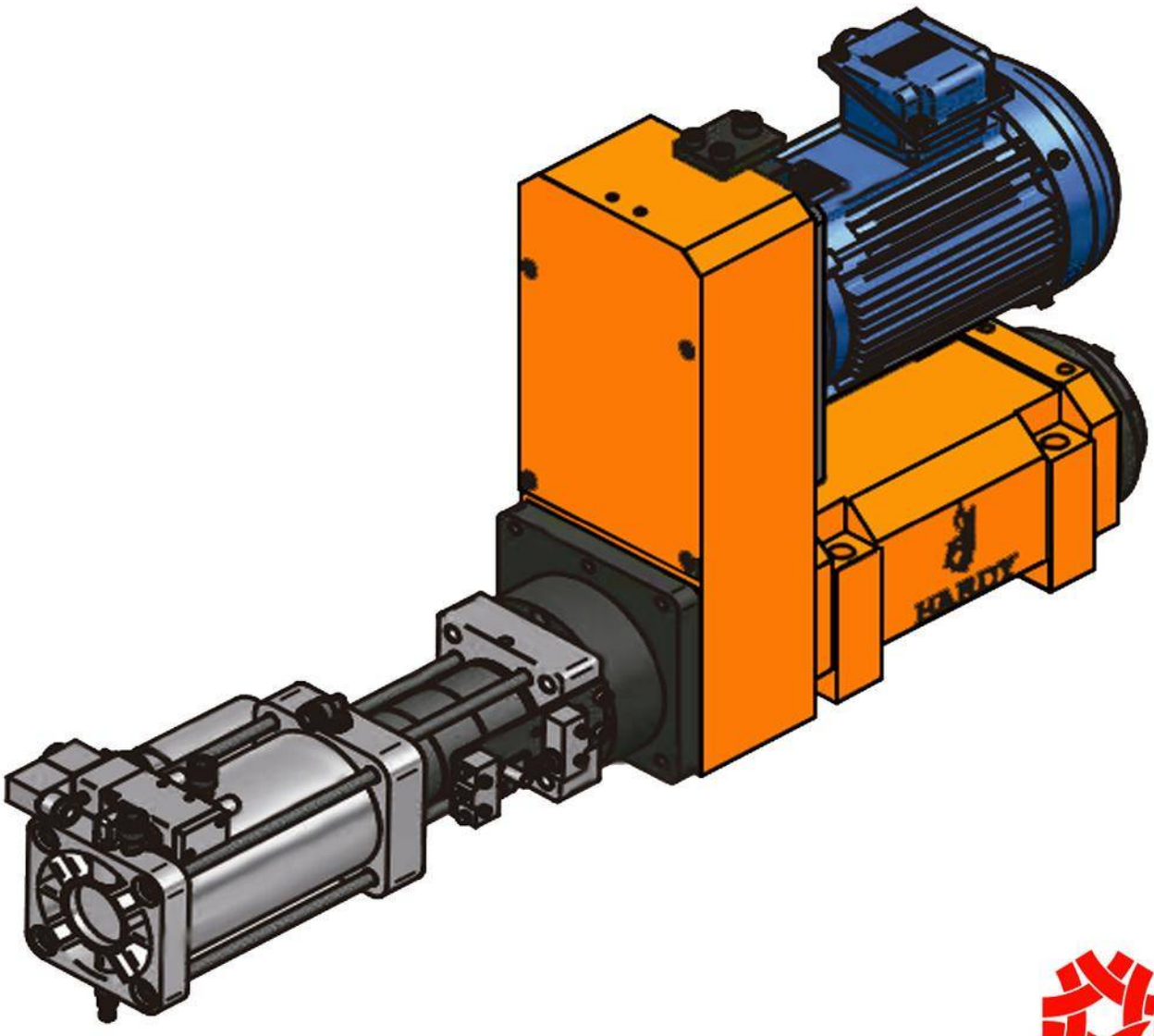

台灣精品 2017
TAIWAN EXCELLENCE

Characteristics & Dimensions

Model	SC55H
Spindle Tool Type	*BT40*
Maximum Spindle Speed (r.p.m.)	*6,000*
Bearings	*7011 x 2 | 7010 x 2*
Roundness	*Within 0.003 mm.*
Maximum Power Handling	*3.0 H.p.*
Rising Temperature	*Within de 20°C*

**** All dimensions are given in millimeters*

SC55H-BT40-MF

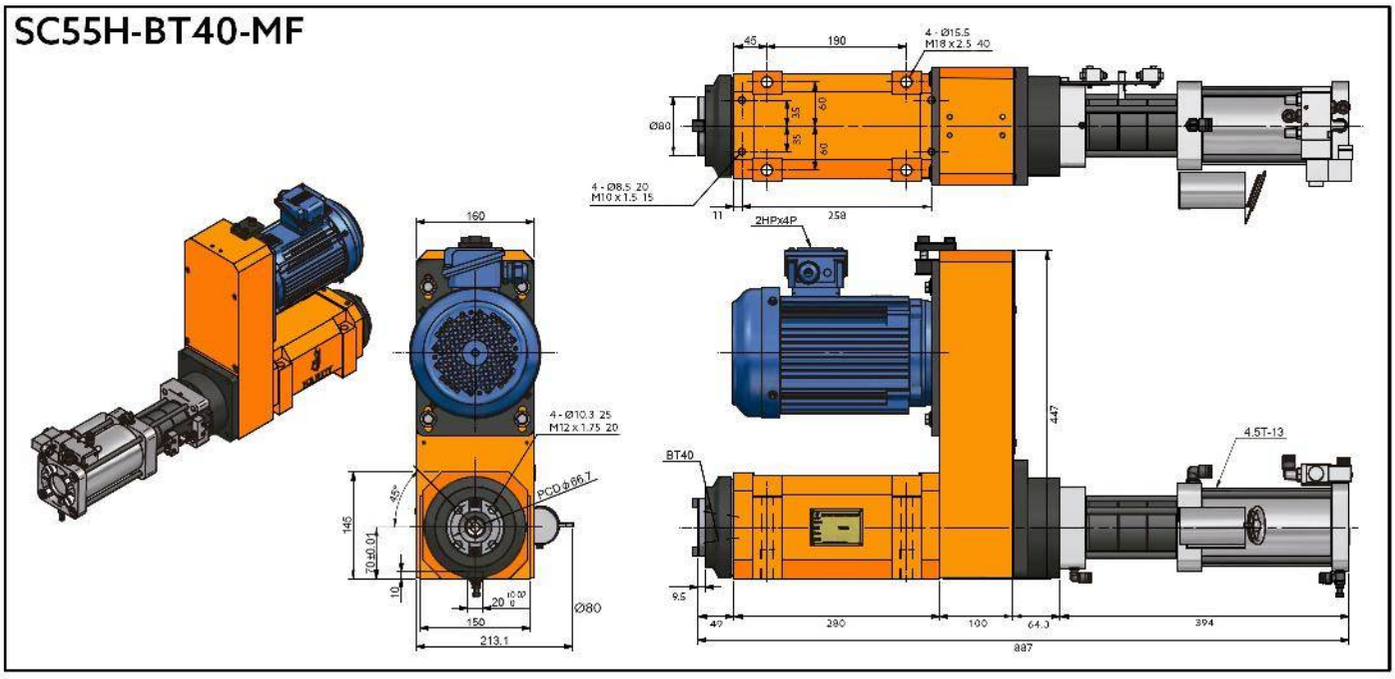

SC55H-BT40-MB

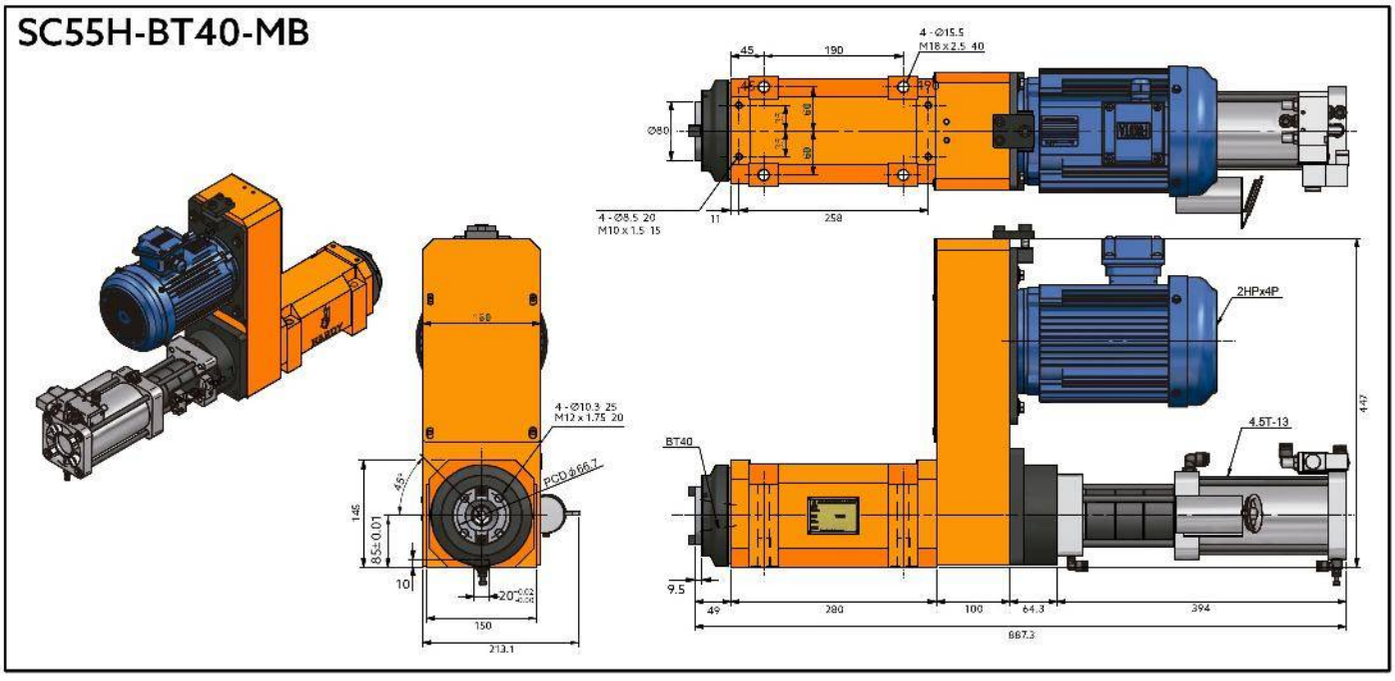

SC80-BT50

Boring & Millind Spindle Head With Automatic Loading/Unloading Tool System

(Backward Configuration)

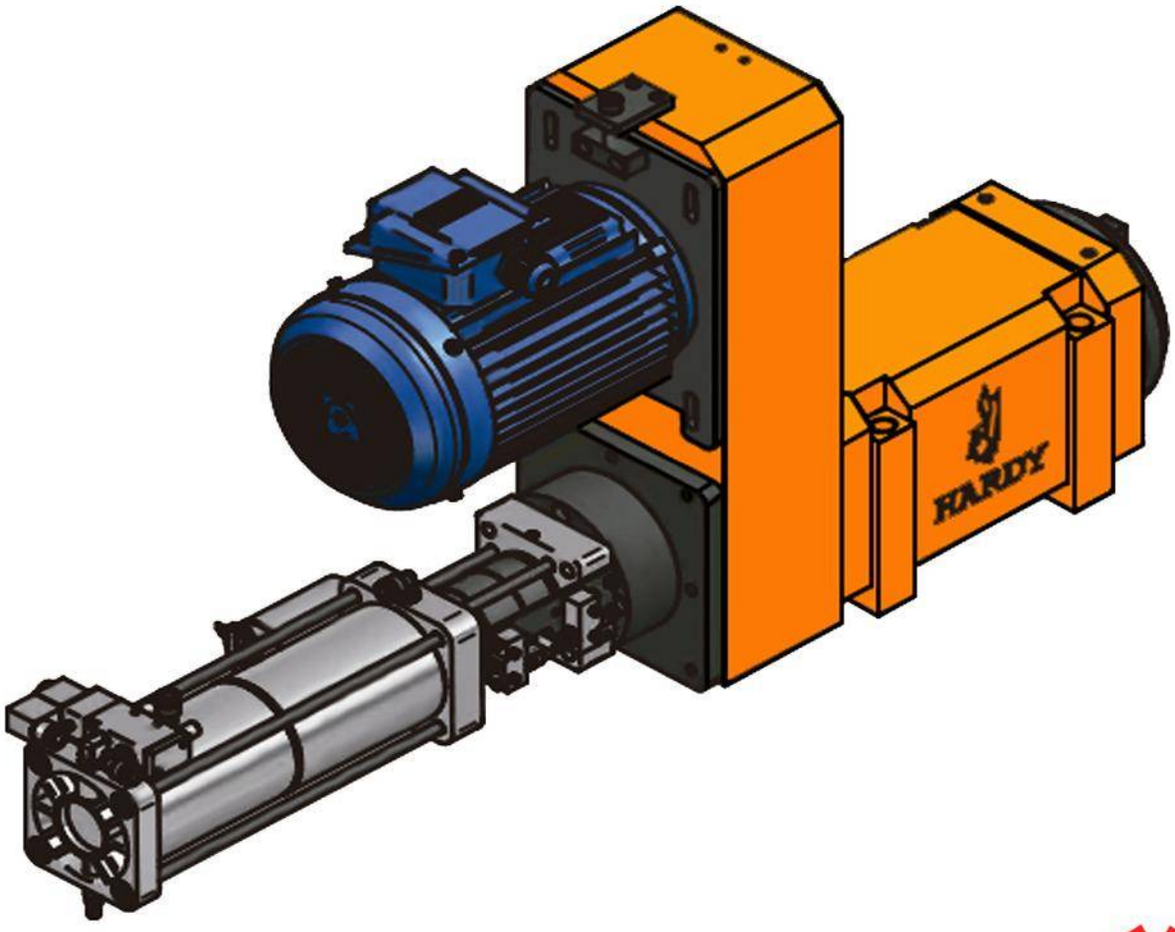

台灣精品 2017
TAIWAN EXCELLENCE

Characteristics & Dimensions

Model	SC80
Spindle Tool Type	*BT50*
Maximum Spindle Speed (r.p.m.)	*1,200*
Bearings	*32216 x 2 | 6216Z x 2*
Roundness	*Within 0.003 mm.*
Maximum Power Handling	*7.5 H.p.*
Rising Temperature	*Within de 20°C*

**** All dimensions are given in millimeters*

SC80-BT50-MF

台灣精品 2017
TAIWAN EXCELLENCE

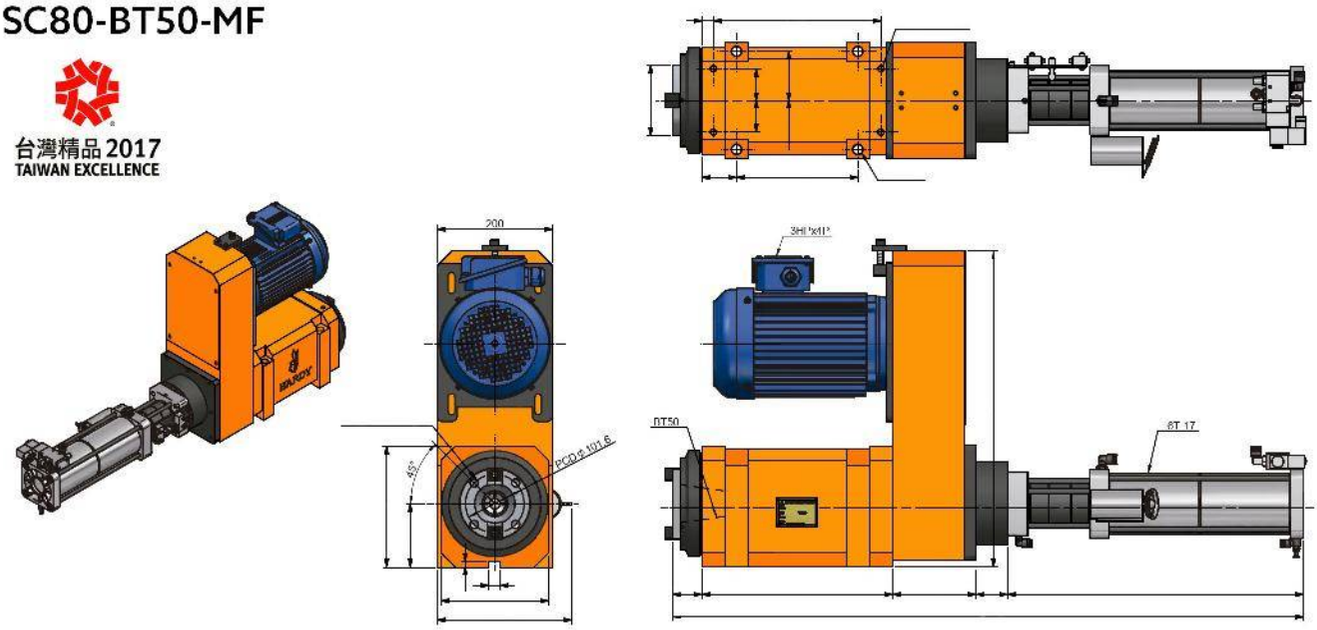

SC80-BT50-MB

台灣精品 2017
TAIWAN EXCELLENCE

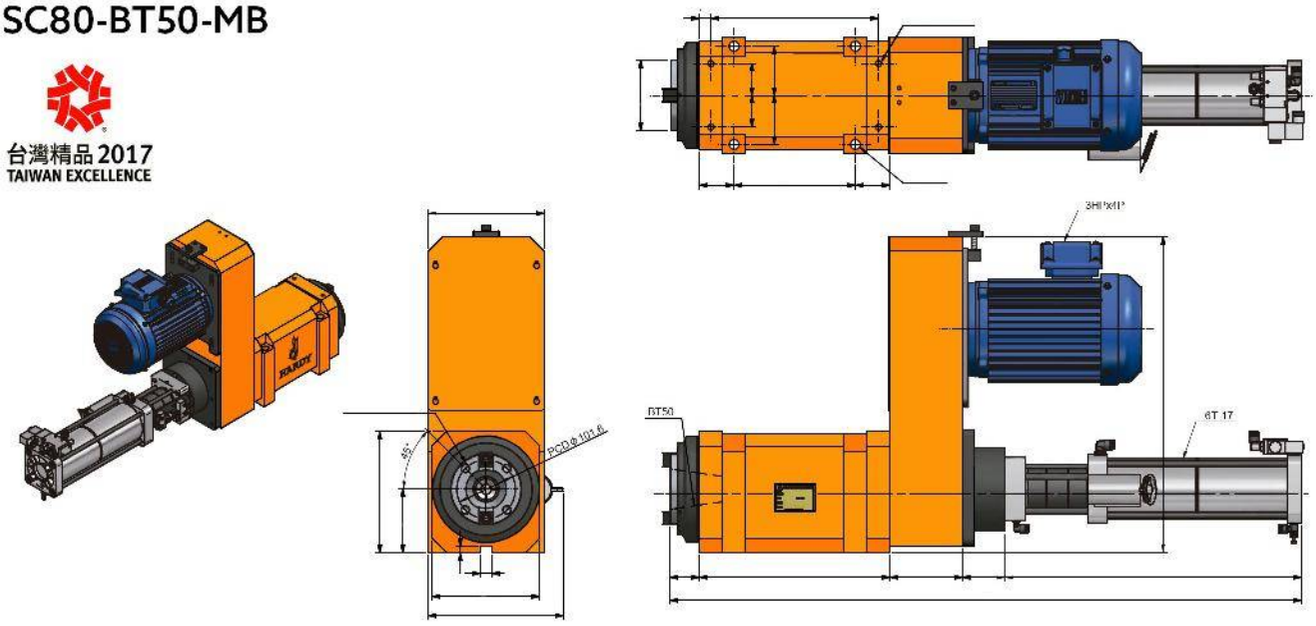

SC80H-BT50

Boring & Millind Spindle Head With Automatic Loading/Unloading Tool System

(Backward Configuration)

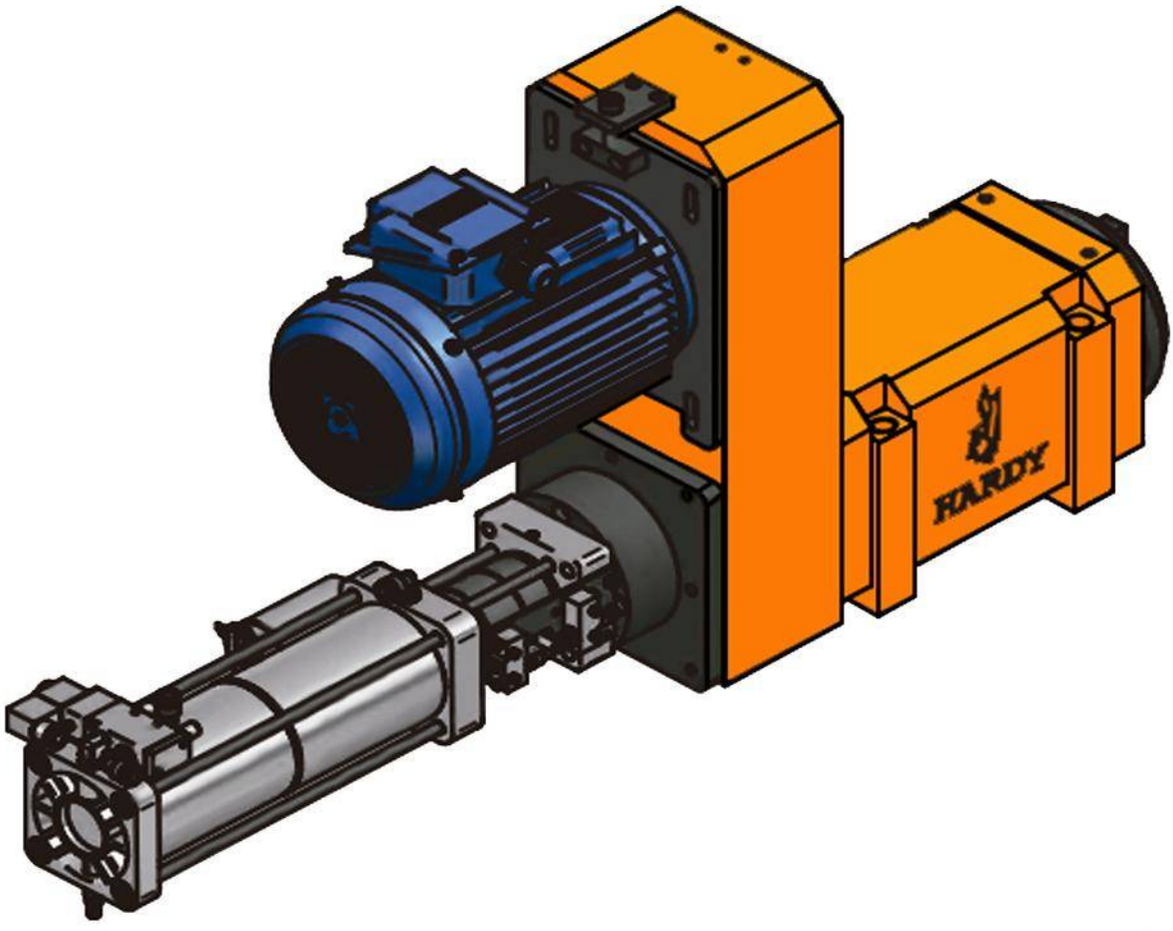

台灣精品 2017
TAIWAN EXCELLENCE

Characteristics & Dimensions

Model	SC80H
Spindle Tool Type	*BT50*
Maximum Spindle Speed (r.p.m.)	*3,000*
Bearings	*7216 x 4*
Roundness	*Within 0.003 mm.*
Maximum Power Handling	*7.5 H.p.*
Rising Temperature	*Within de 20°C*

*** All dimensions are given in millimeters*

SC80H-BT50-MF

台灣精品 2017
TAIWAN EXCELLENCE

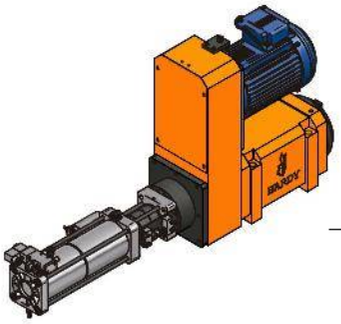

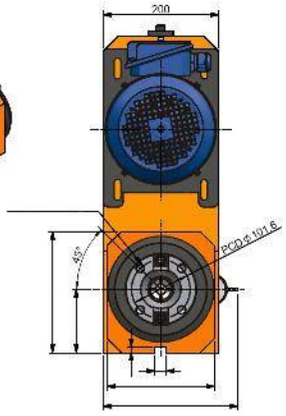

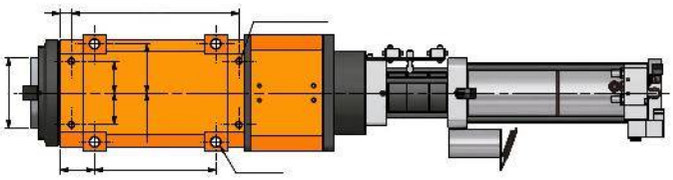

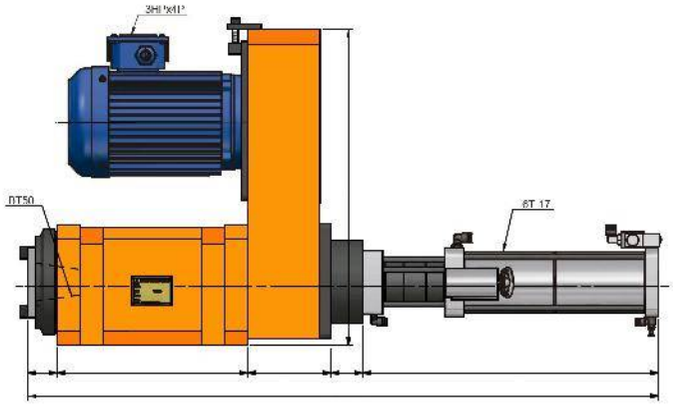

SC80H-BT50-MB

台灣精品 2017
TAIWAN EXCELLENCE

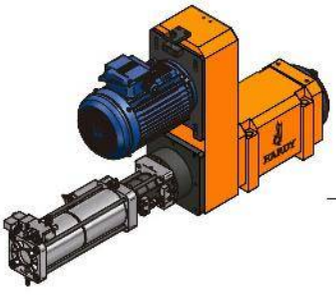

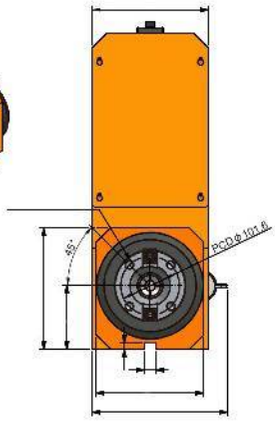

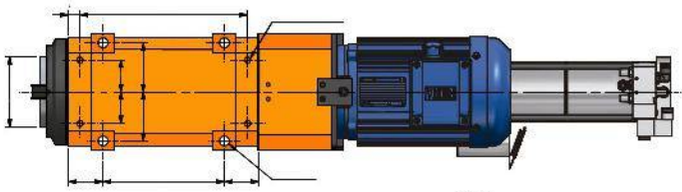

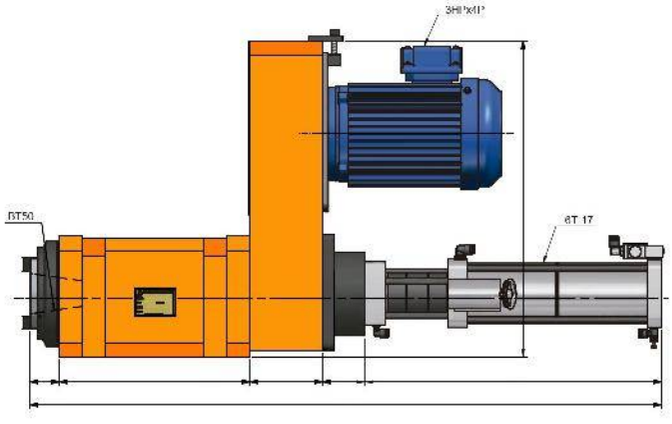

SCS55-BT40

Boring & Millind Spindle Head With Automatic Loading/Unloading Tool System

(Lateral Configuration)

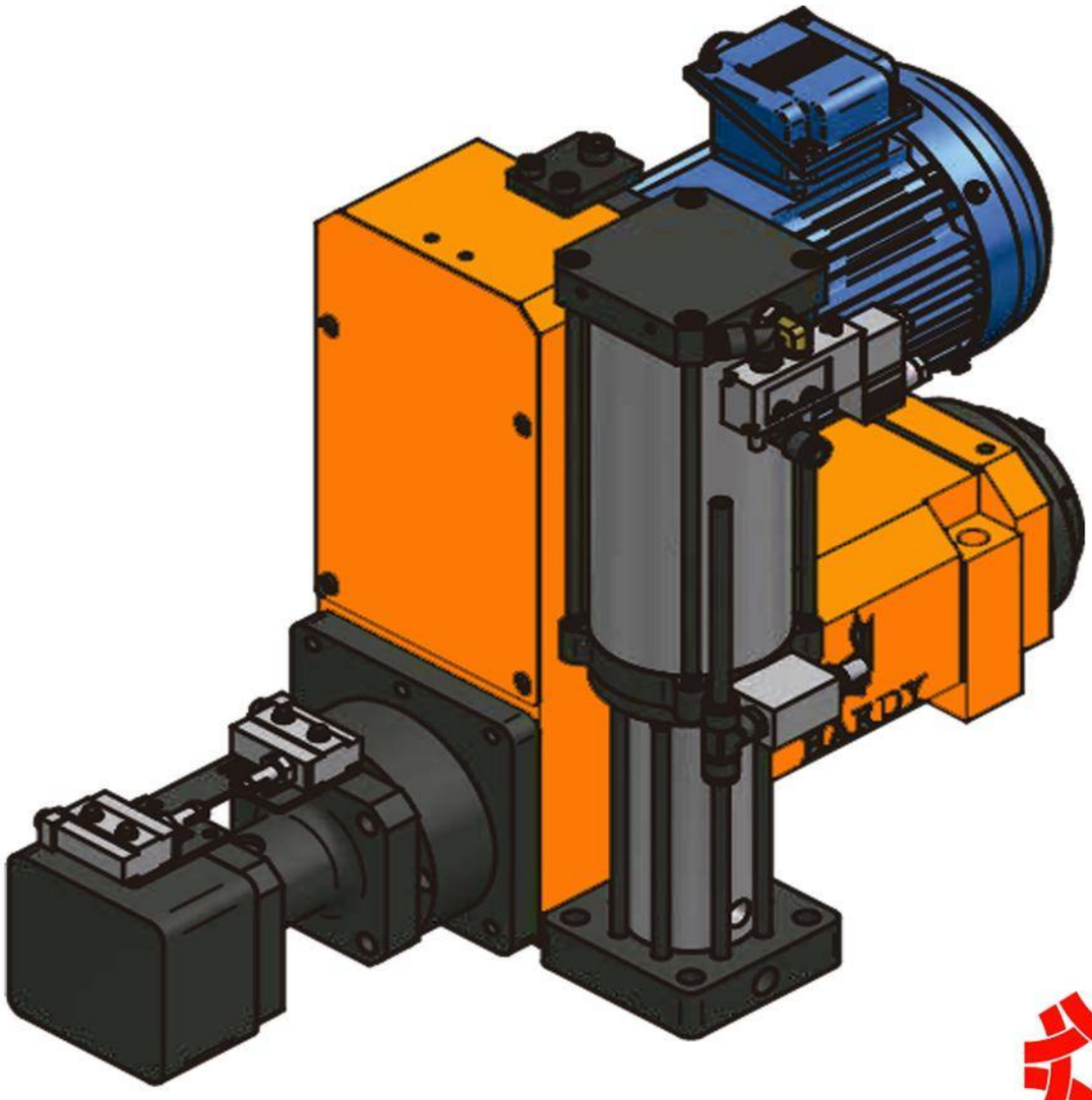

台灣精品 2017
TAIWAN EXCELLENCE

Characteristics & Dimensions

Model	SCS55
Spindle Tool Type	*BT40*
Maximum Spindle Speed (r.p.m.)	*2,000*
Bearings	*32011/6011Z | 32010/6010Z*
Roundness	*Within 0.003 mm.*
Maximum Power Handling	*3.0 H.p.*
Rising Temperature	*Within de 20°C*

**** All dimensions are given in millimeters*

SCS55-BT40-MF

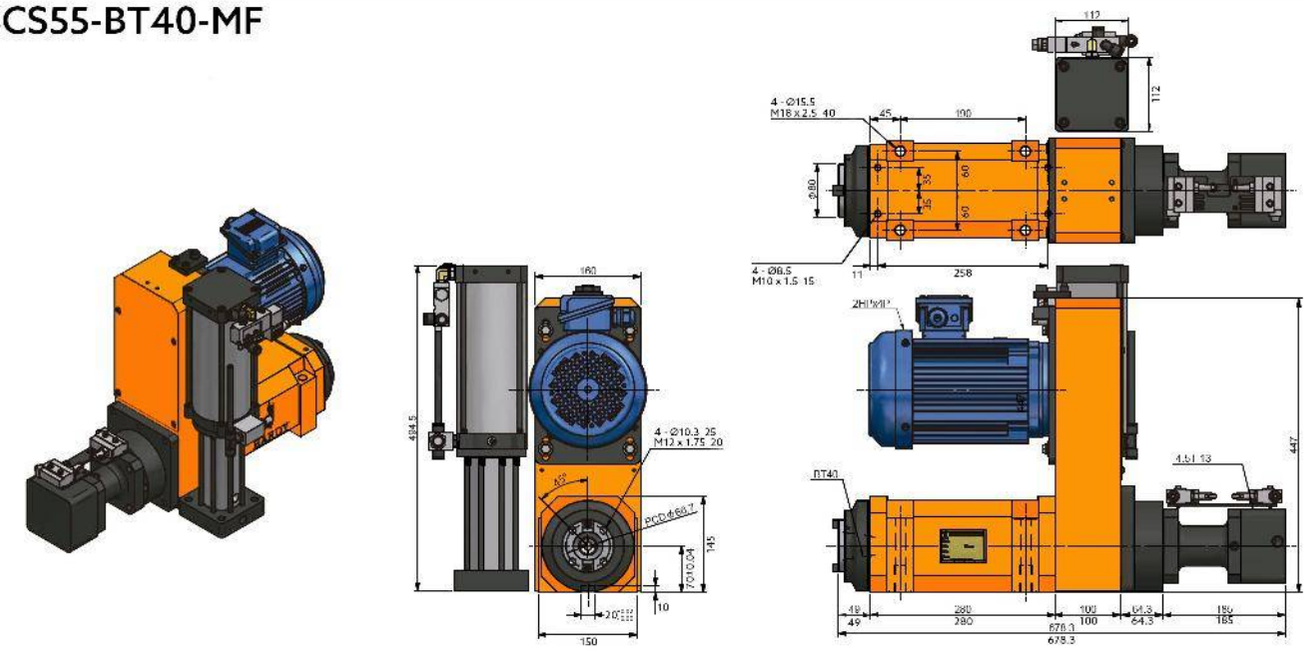

SC55-BT40-MB

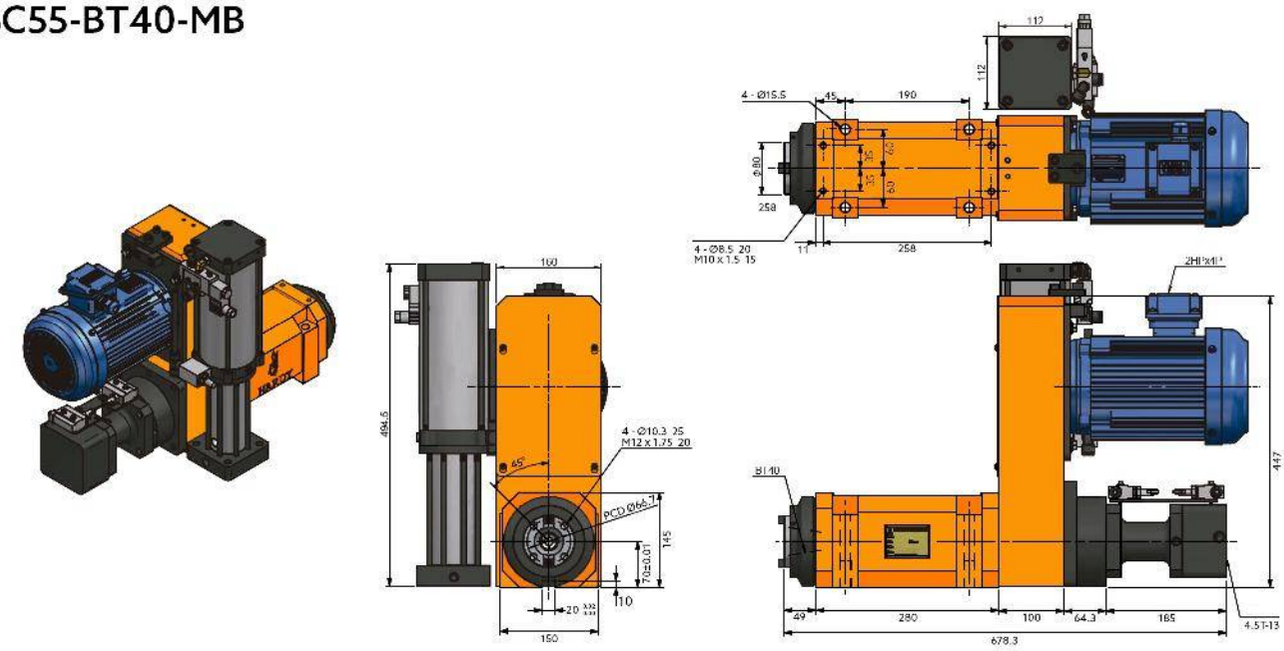

4 - Ø15.5
45
190
112
112
Ø80
258
4 - Ø8.5 20
M10 x 1.5 15
11
258
160
494.5
4 - Ø10.3 25
M12 x 1.75 20
45°
PCD Ø66.7
145
70±0.01
10
20
150
BT40
447
49
280
100
64.3
185
678.3
4.5T-13

SCS55H-BT40

Boring & Millind Spindle Head With Automatic Loading/Unloading Tool System

(Lateral Configuration)

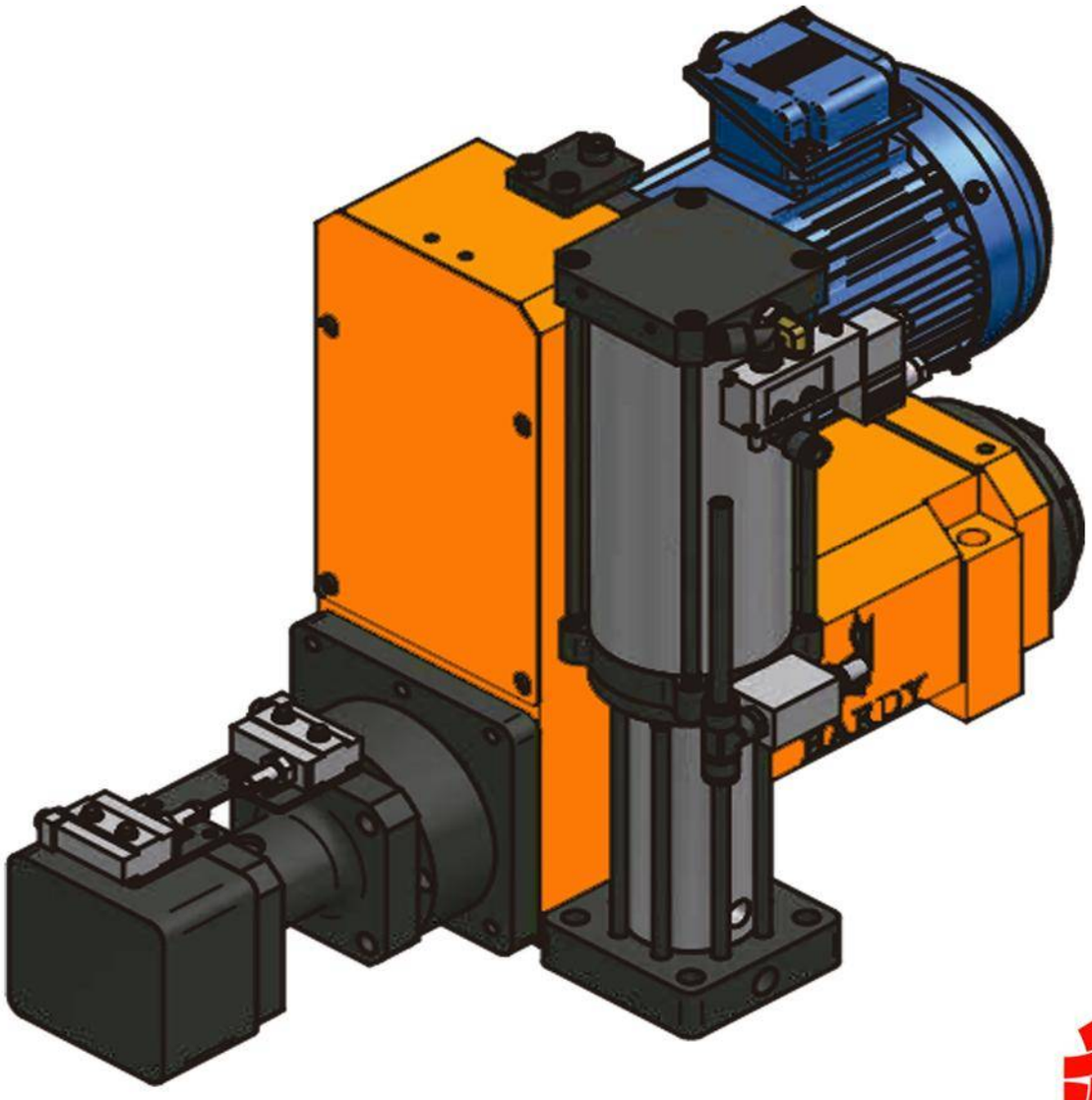

台灣精品 2017
TAIWAN EXCELLENCE

Characteristics & Dimensions

Model	SCS55H
Spindle Tool Type	*BT40*
Maximum Spindle Speed (r.p.m.)	*6,000*
Bearings	*7011 x 2 | 7010 x 2*
Roundness	*Within 0.003 mm.*
Maximum Power Handling	*3.0 H.p.*
Rising Temperature	*Within de 20°C*

**** All dimensions are given in millimeters*

SCSH55-BT40-MF

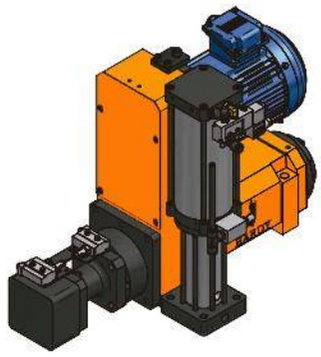

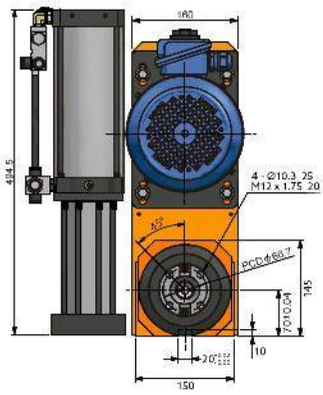

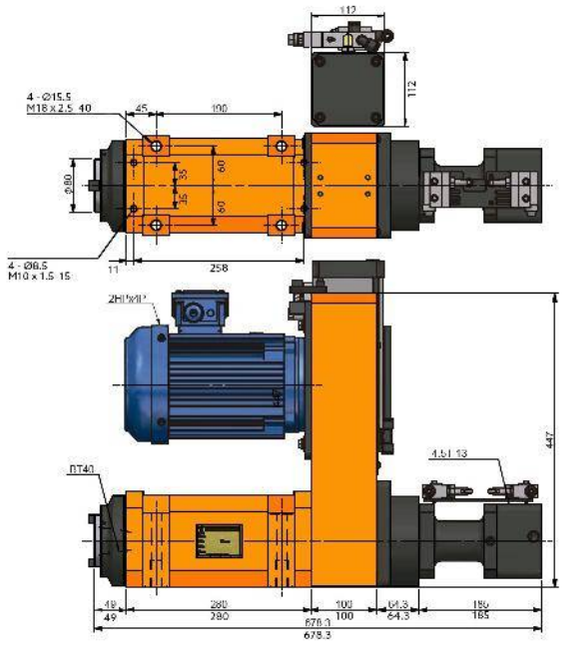

SC55H-BT40-MB

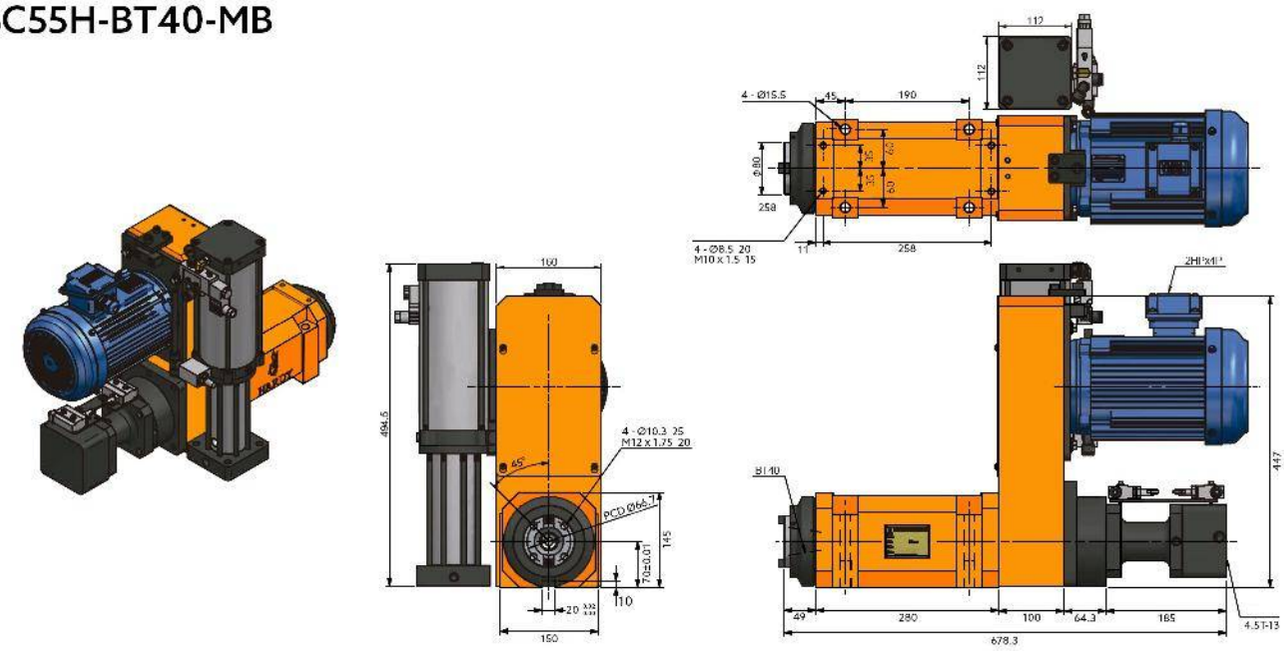

SCS80-BT50

Boring & Millind Spindle Head With Automatic Loading/Unloading Tool System

(Lateral Configuration)

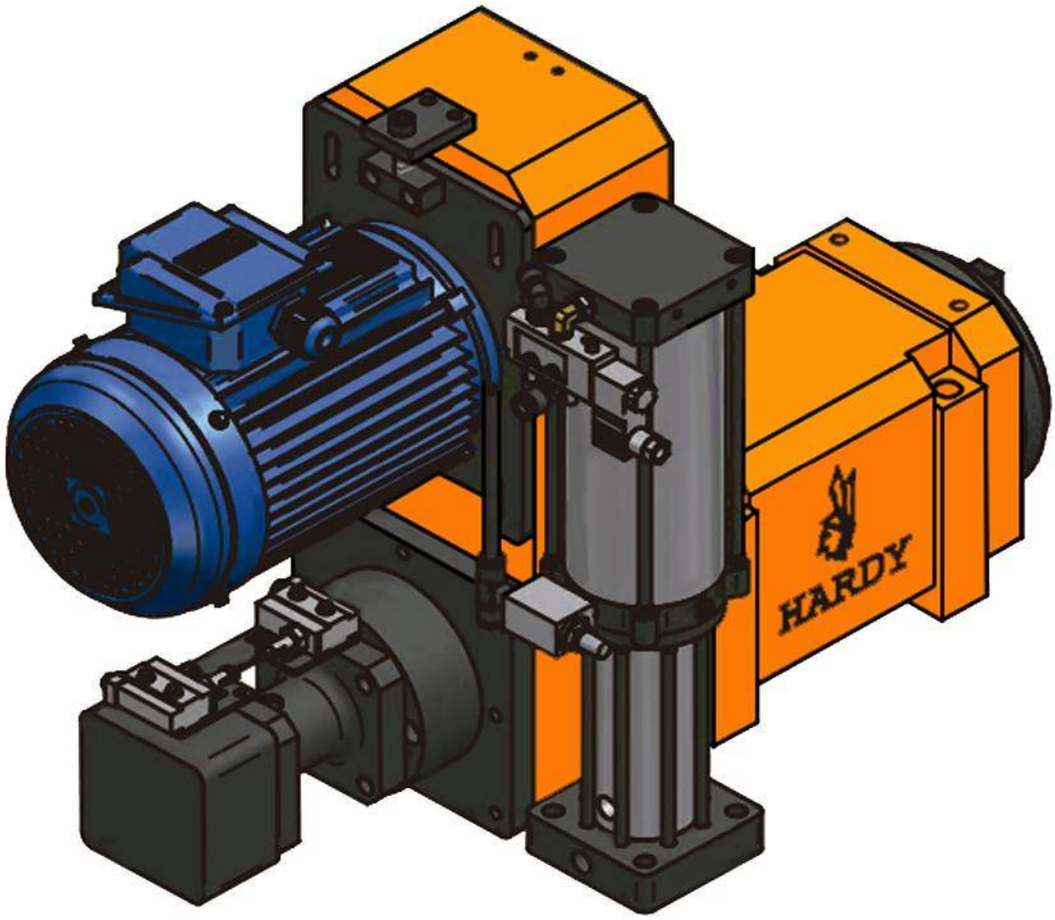

台灣精品 2017
TAIWAN EXCELLENCE

Characteristics & Dimensions

Model	SCS80
Spindle Tool Type	*BT50*
Maximum Spindle Speed *(r.p.m.)*	*1,200*
Bearings	*32216 x 2 | 6216Z x 2*
Roundness	*Within 0.003 mm.*
Maximum Power Handling	*7.5 H.p.*
Rising Temperature	*Within de 20°C*

**** All dimensions are given in millimeters*

SCS80-BT50-MF

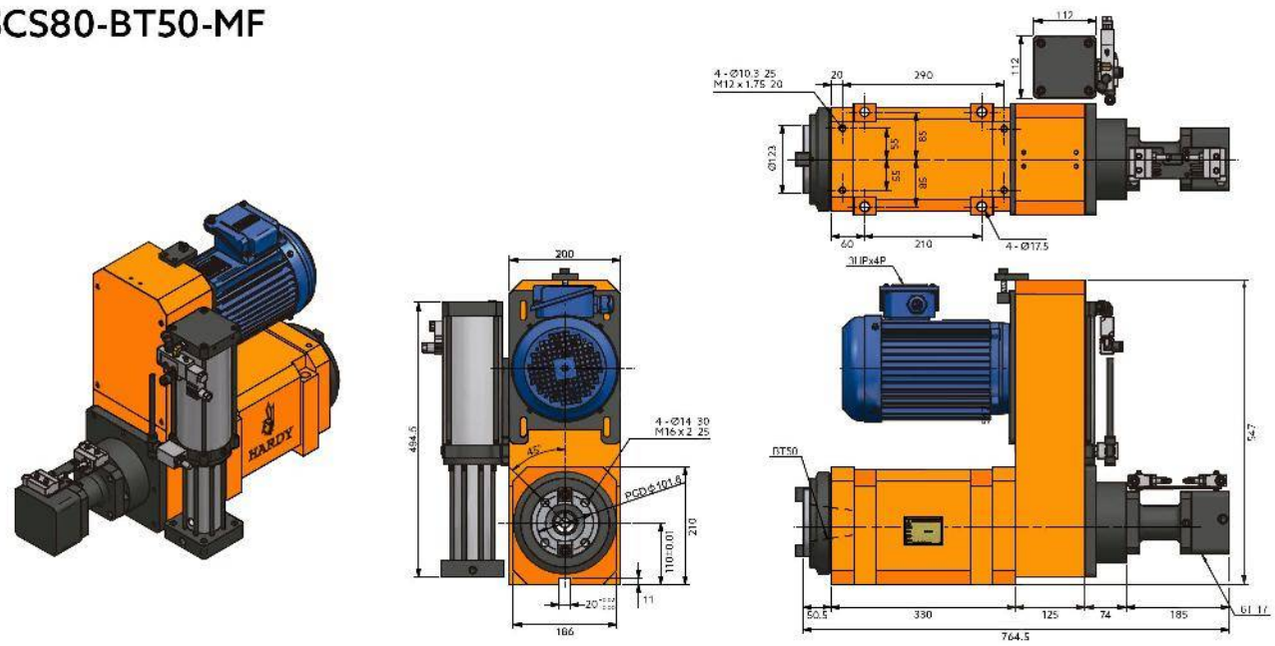

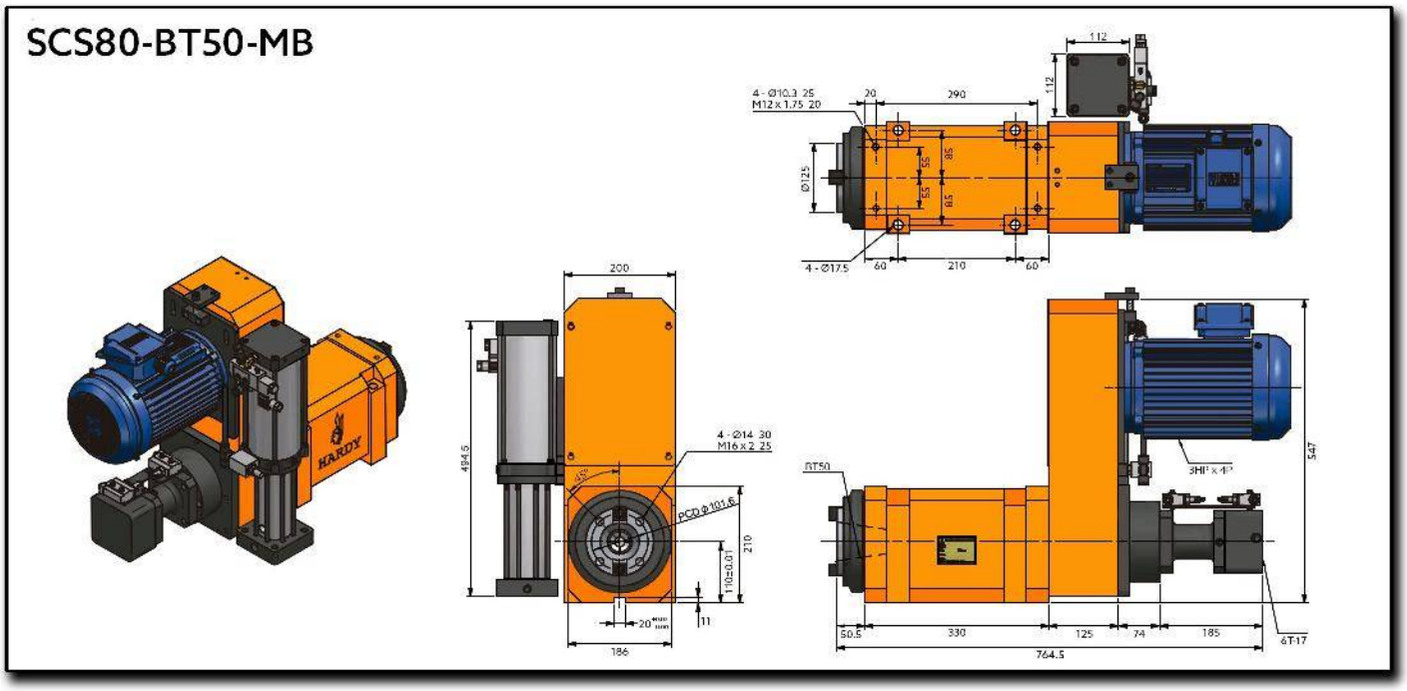
SCS80-BT50-MB
4 - Ø10.3 25
M12 x 1.75 20
20
290
112
112
Ø125
55
55
85
65
4 - Ø17.5
60
210
60
200
494.5
4 - Ø14 30
M16 x 2 25
45°
PCD Ø101.6
110±0.01
210
20
11
186
BT50
3HP x 4P
547
50.5
330
125
74
185
6T-17
764.5

SCS80H-BT50

Boring & Millind Spindle Head With Automatic Loading/Unloading Tool System

(Lateral Configuration)

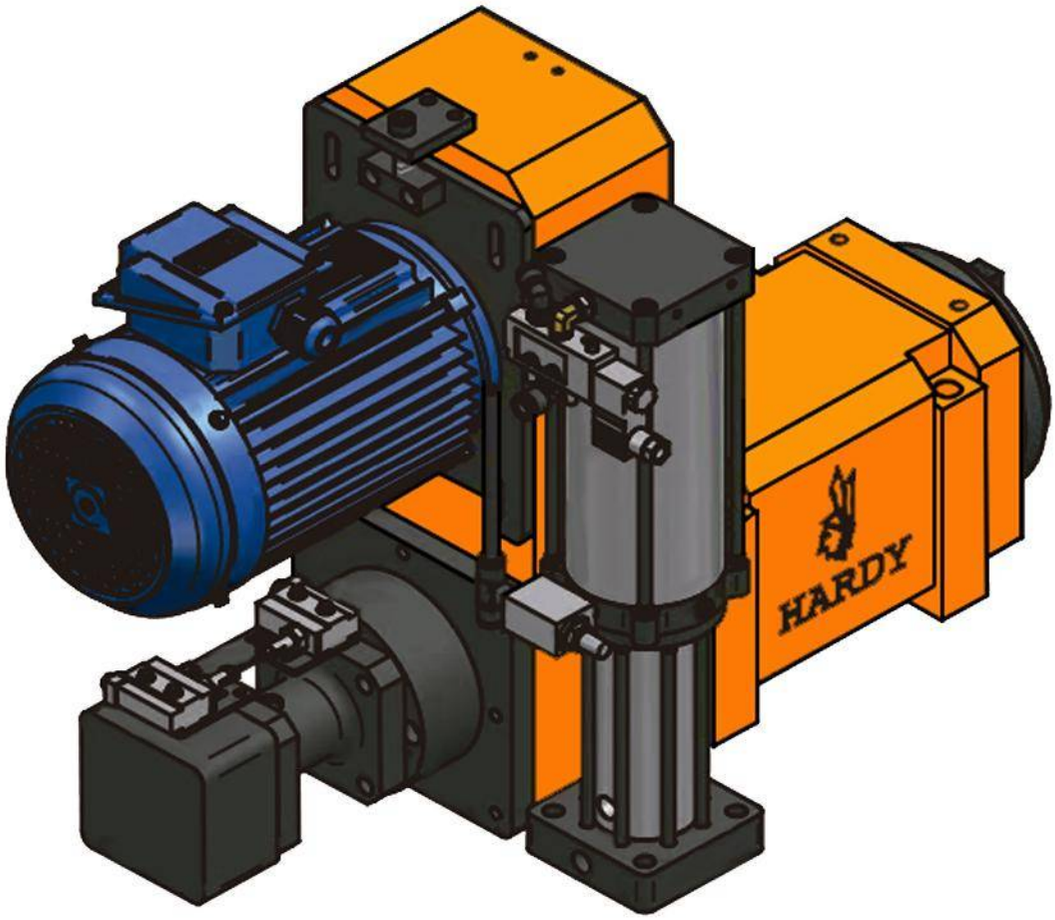

台灣精品 2017
TAIWAN EXCELLENCE

Characteristics & Dimensions

MODEL	SCS80H
Spindle Tool Type	*BT50*
Maximum Spindle Speed (r.p.m.)	*3,000*
Bearings	*7216 x 2*
Roundness	*Within 0.003 mm.*
Maximum Power Handling	*7.5 H.p.*
Rising Temperature	*Within de 20°C*

**** All dimensions are given in millimeters*

SCS80H-BT50-MF

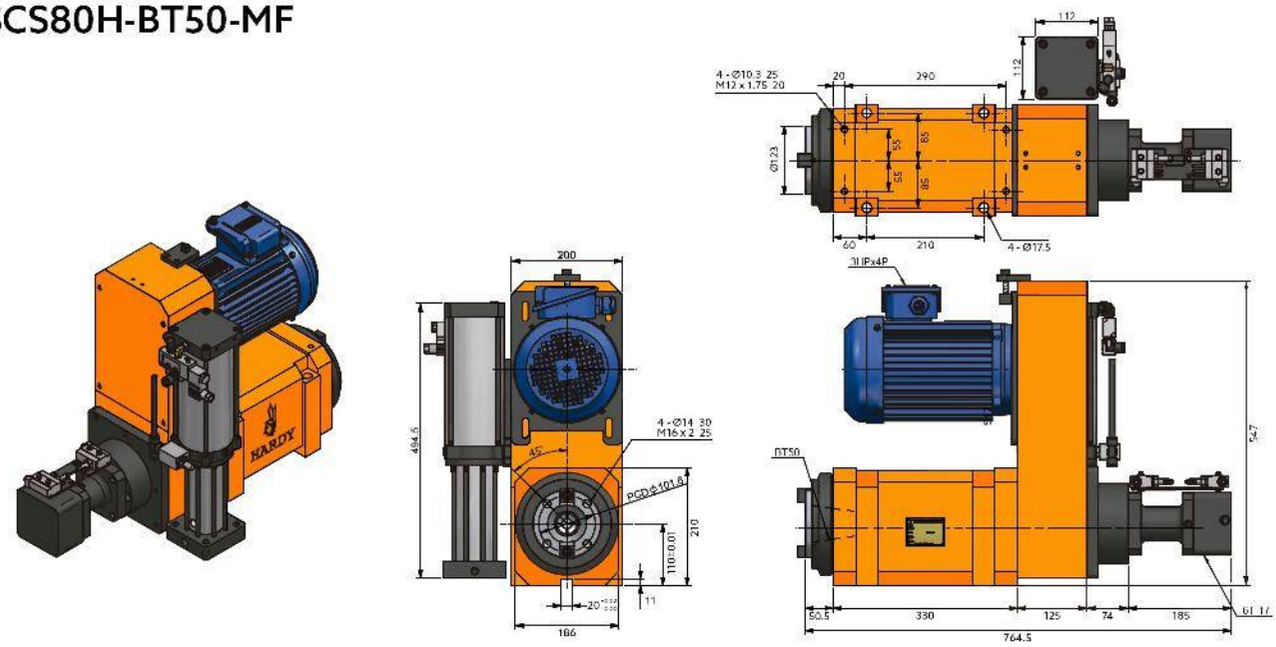

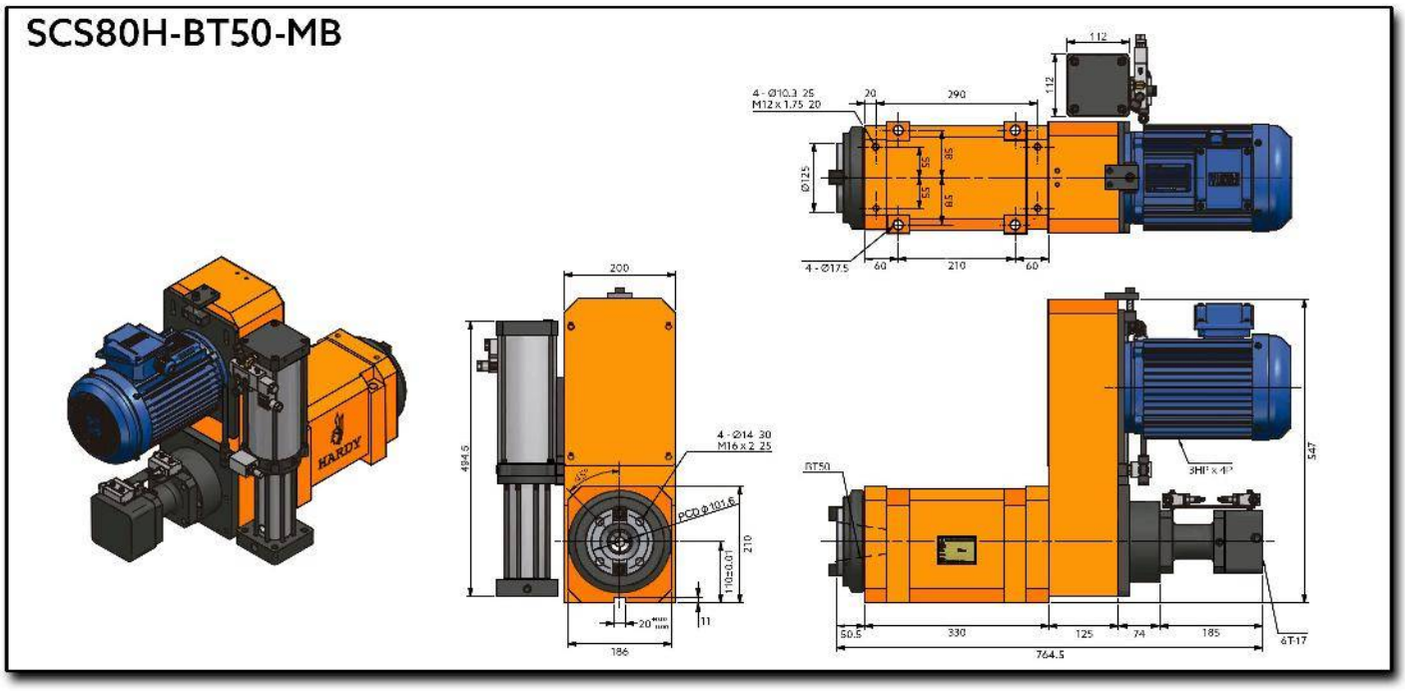
SCS80H-BT50-MB
4 - Ø10.3 25
M12 x 1.75 20
20
290
112
112
Ø125
55
55
85
65
4 - Ø17.5
60
210
60
200
494.5
4 - Ø14 30
M16 x 2 25
45°
PCD Ø101.6
110±0.01
210
20
11
186
BT50
3HP x 4P
547
50.5
330
125
74
185
6T-17
764.5

SD SERIES

DRILLING SPINDLE HEADS

SD3-60M
Drilling Spindle Head

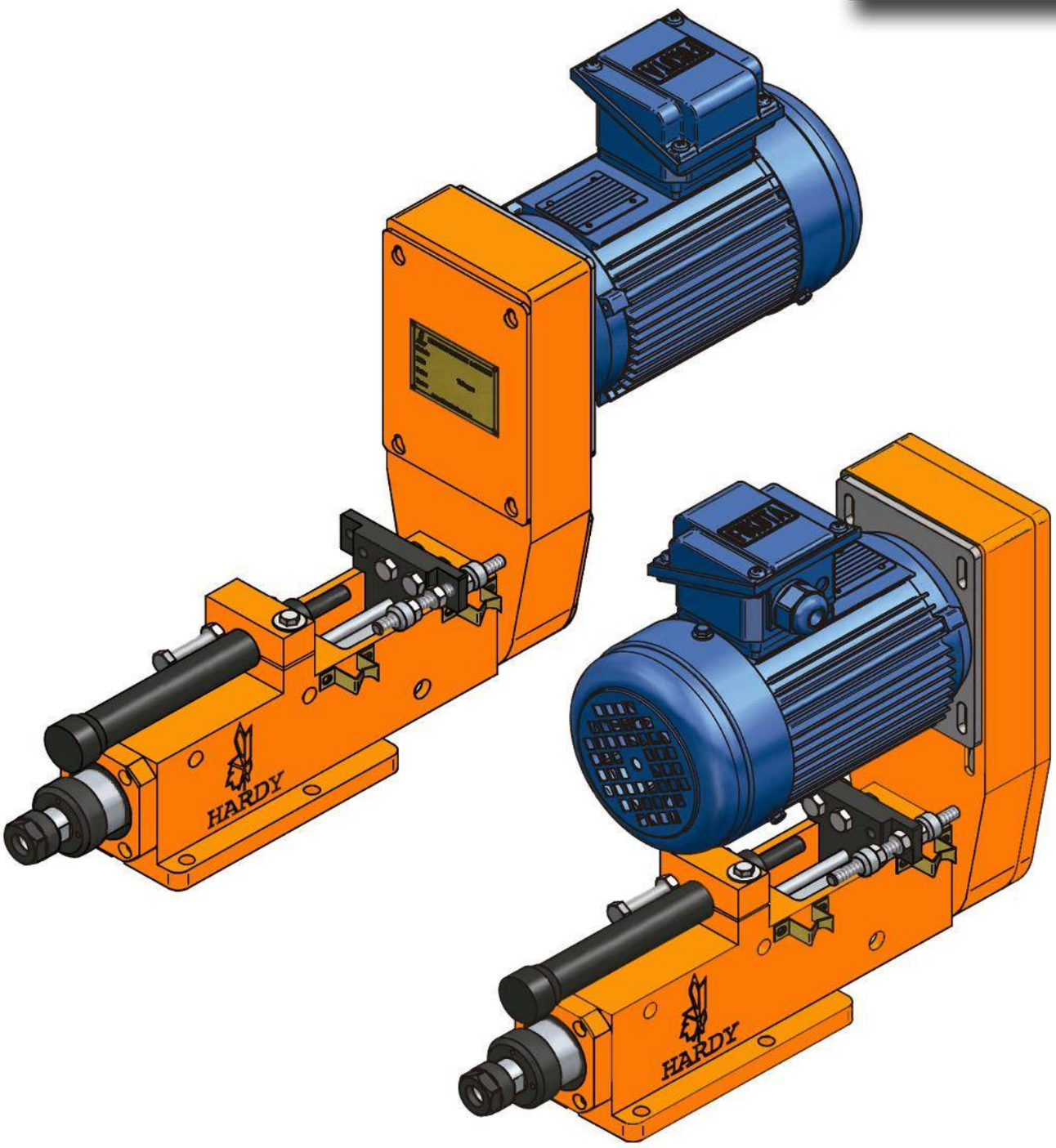

Characteristics & Dimensions

MODEL	SD03-60M
Maximum Drilling Capacity (S45C)	Ø6
Maximum Spindle Stroke	60.00
Maximum Spindle Speed (r.p.m.)	10,000.00
Movement Pressure	(A) 4.00 ~ 8.00 Kg/cm2 (H) 10.00 ~ 15.00 Kg/cm2
Cylinder Diameter	(F) 12.60 cm2 (B) 7.10 cm2
Maximum Power (3 Phases)	½ H.p., 220 Volts / 60 Hz.
Transmission Belt	5J - 200
Total Equipment Weight	18.00 Kg
Spindle Bearings	6002ZZ x 4
Pulley Bearings	6002ZZ x 3
Front Cover Seal	TC22 x 30 x 7 TC40 x 50 x 8
Piston O-Ring	AS-326 x 2, UHS40
Front Cover O-Ring	AG-45 x 2, AG40 x 2

*** Roundness ≤ 0.003mm.
**** All dimensions are given in milimeters.

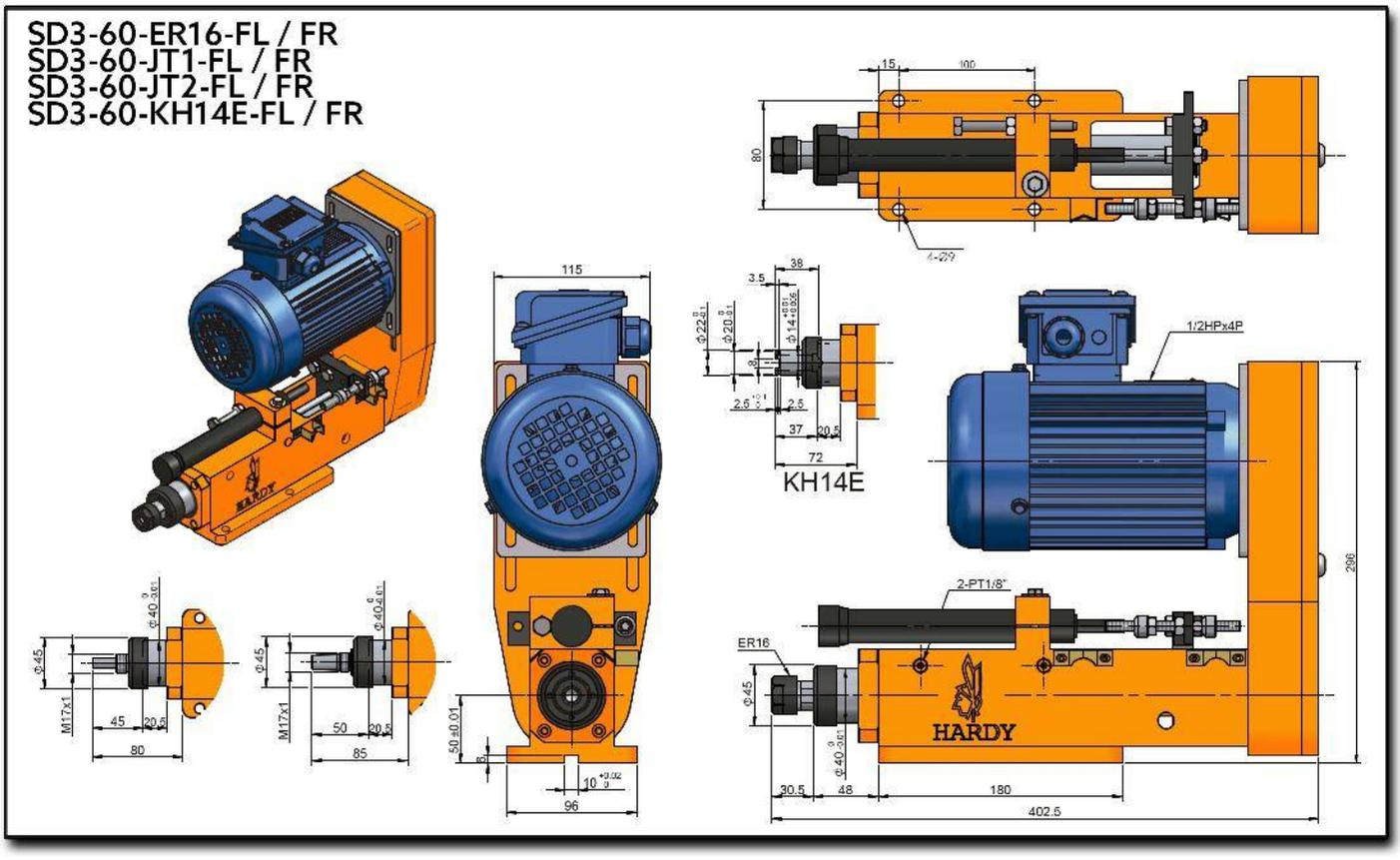
SD3-60-ER16-FL / FR
SD3-60-JT1-FL / FR
SD3-60-JT2-FL / FR
SD3-60-KH14E-FL / FR
KH14E
1/2HPx4P
2-PT1/8"
ER16
HARDY

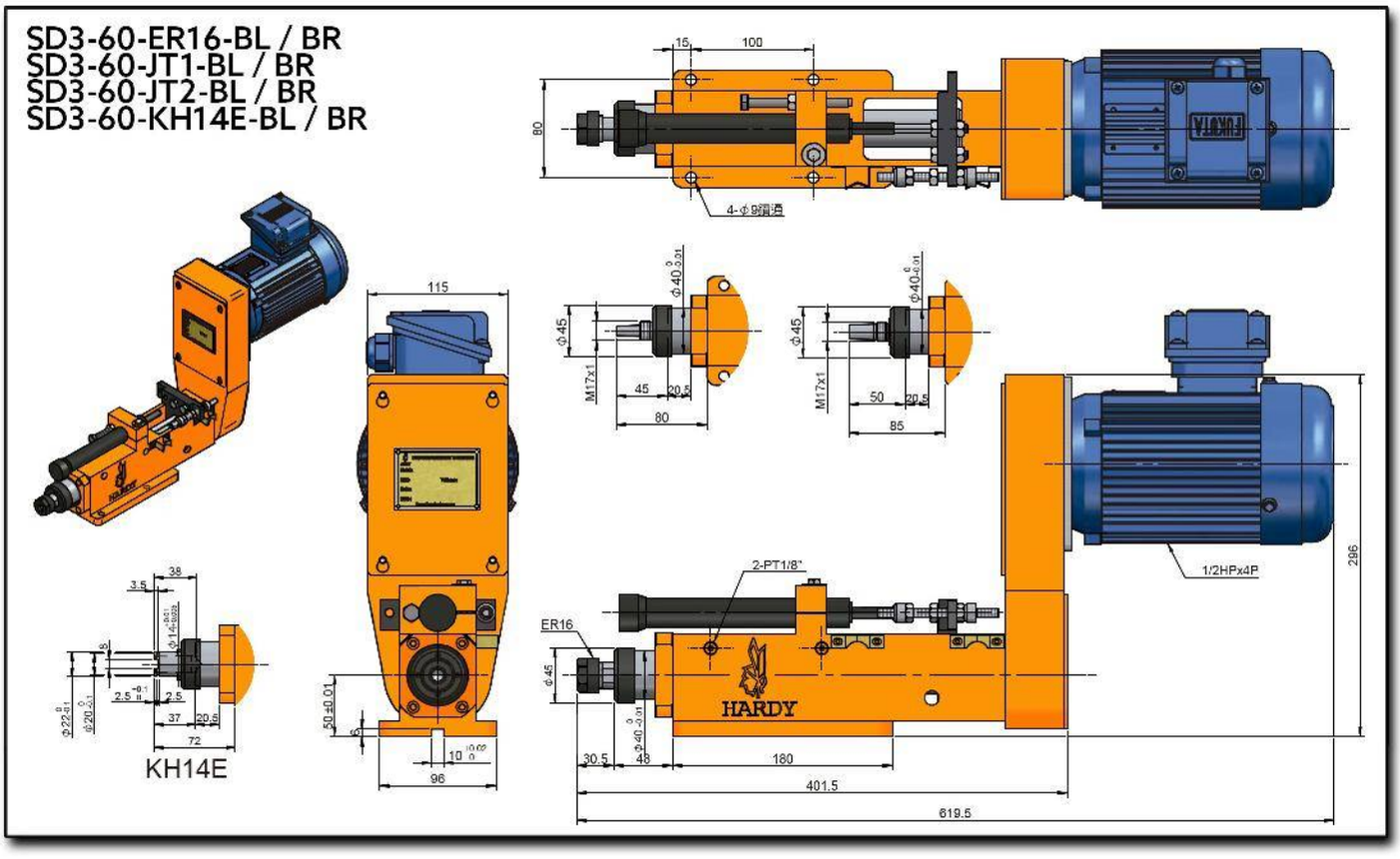
SD3-60-ER16-BL / BR
SD3-60-JT1-BL / BR
SD3-60-JT2-BL / BR
SD3-60-KH14E-BL / BR
KH14E
HARDY
ER16
2-PT1/8"
1/2HPx4P
619.5
401.5
180
96
115

SD3-80M

Drilling Spindle Head

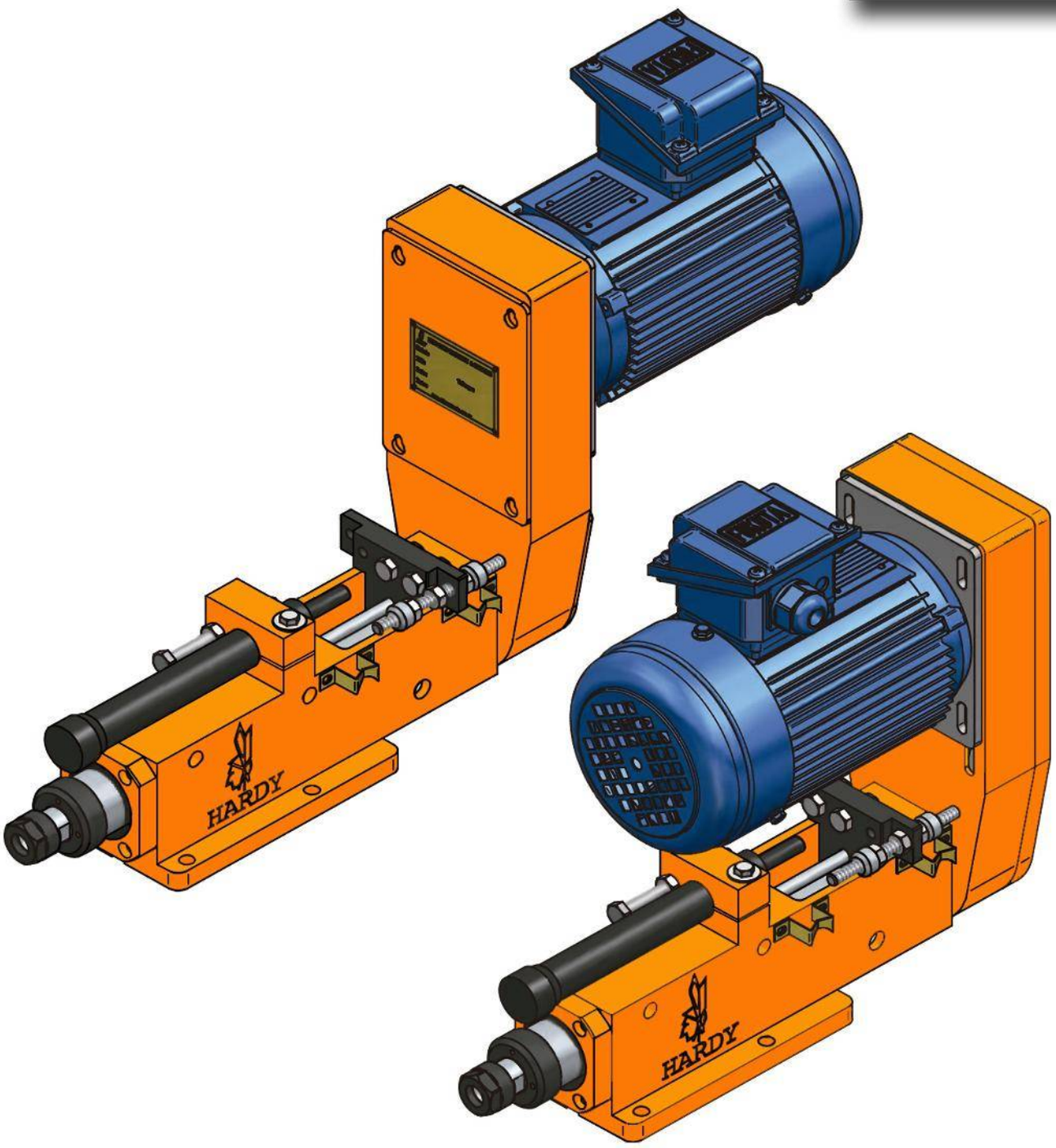

Characteristics & Dimensions

MODEL	SD03-80M
Maximum Drilling Capacity (S45C)	Ø6
Maximum Spindle Stroke	80.00
Maximum Spindle Speed (r.p.m.)	10,000.00
Movement Pressure	(A) 4.00 ~ 8.00 Kg/cm2 (H) 10.00 ~ 15.00 Kg/cm2
Cylinder Diameter	(F) 12.60 cm2 (B) 7.10 cm2
Maximum Power (3 Phases)	½ H.p., 220 Volts / 60 Hz.
Transmission Belt	5J - 200
Total Equipment Weight	18.00 Kg
Spindle Bearings	6002ZZ x 4
Pulley Bearings	6002ZZ x 3
Front Cover Seal	TC22 x 30 x 7 TC40 x 50 x 8
Piston O-Ring	AS-326 x 2, UHS40
Front Cover O-Ring	AG-45 x 2, AG40 x 2

*** Roundness ≤ 0.003mm.
**** All dimensions are given in milimeters.

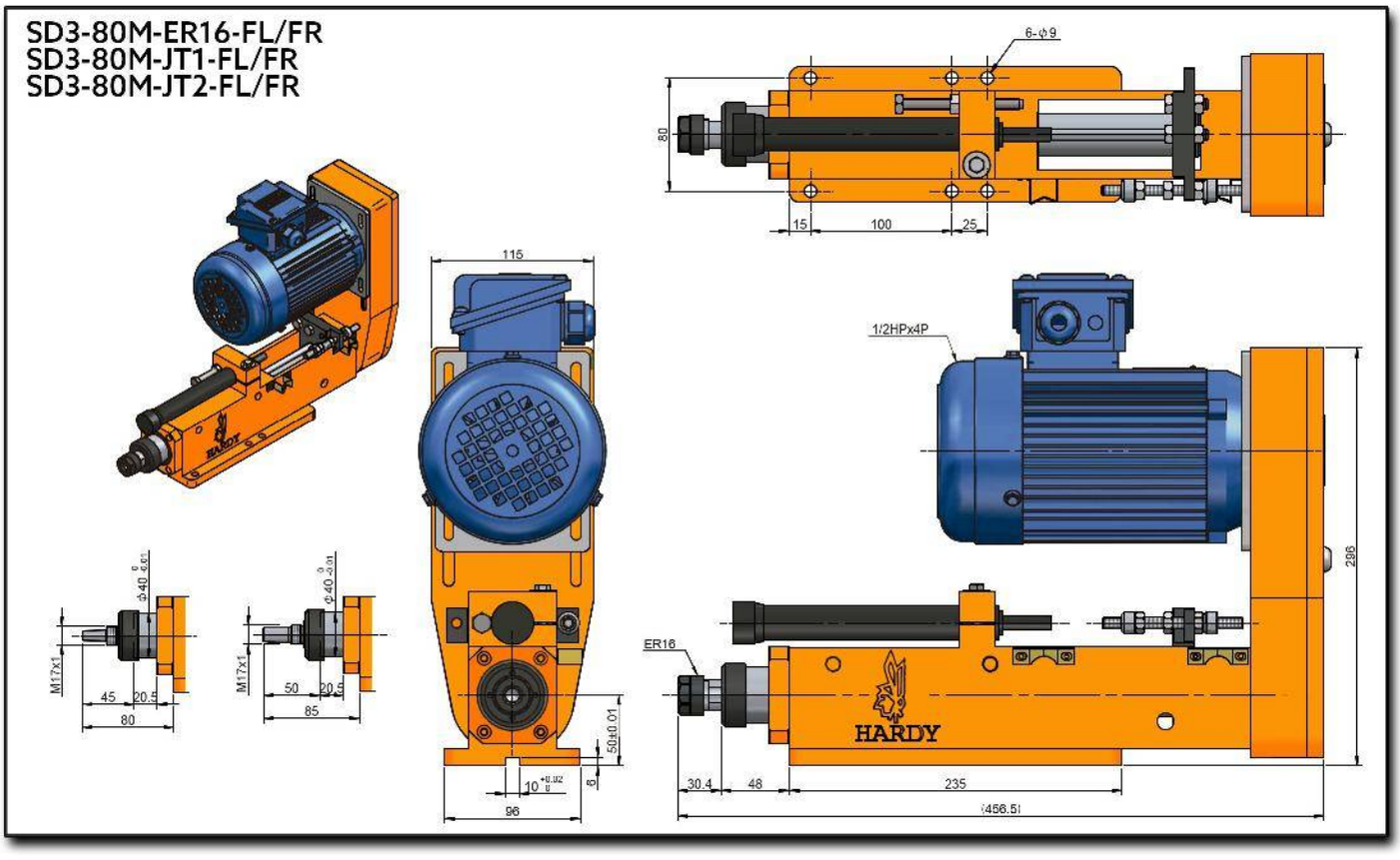
SD3-80M-ER16-FL/FR
SD3-80M-JT1-FL/FR
SD3-80M-JT2-FL/FR
6-φ9
80
15
100
25
115
1/2HPx4P
296
ER16
HARDY
30.4
48
235
456.5
M17x1
45
20.5
80
M17x1
50
20.5
85
50±0.01
10
8
96

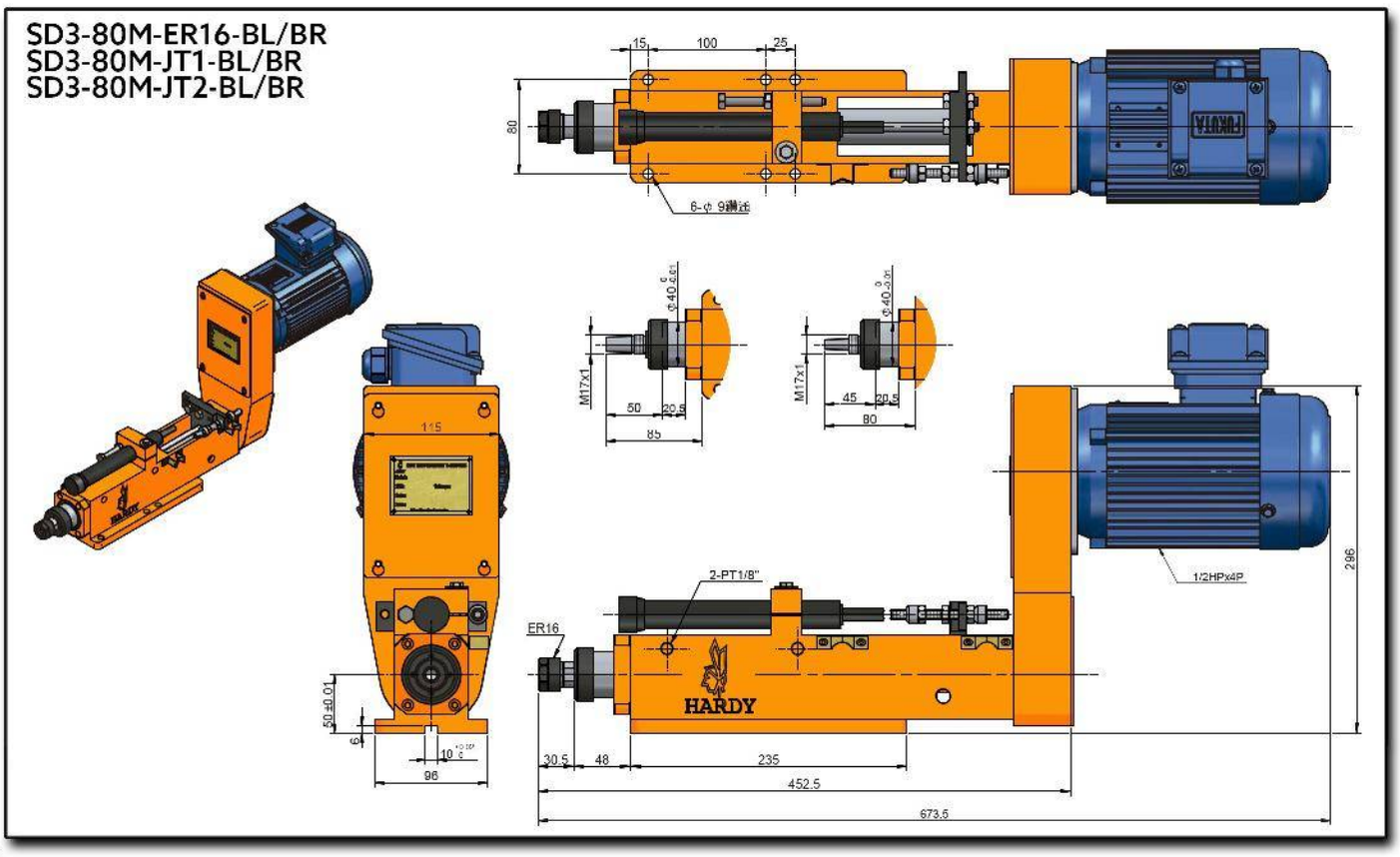
SD3-80M-ER16-BL/BR
SD3-80M-JT1-BL/BR
SD3-80M-JT2-BL/BR
15
100
25
80
6-φ 9
M17x1
50
20.5
85
45
80
115
50±0.01
6
10
96
2-PT1/8"
ER16
HARDY
1/2HPx4P
296
30.5
48
235
452.5
673.5

SD3A-55M

Drilling Spindle Head



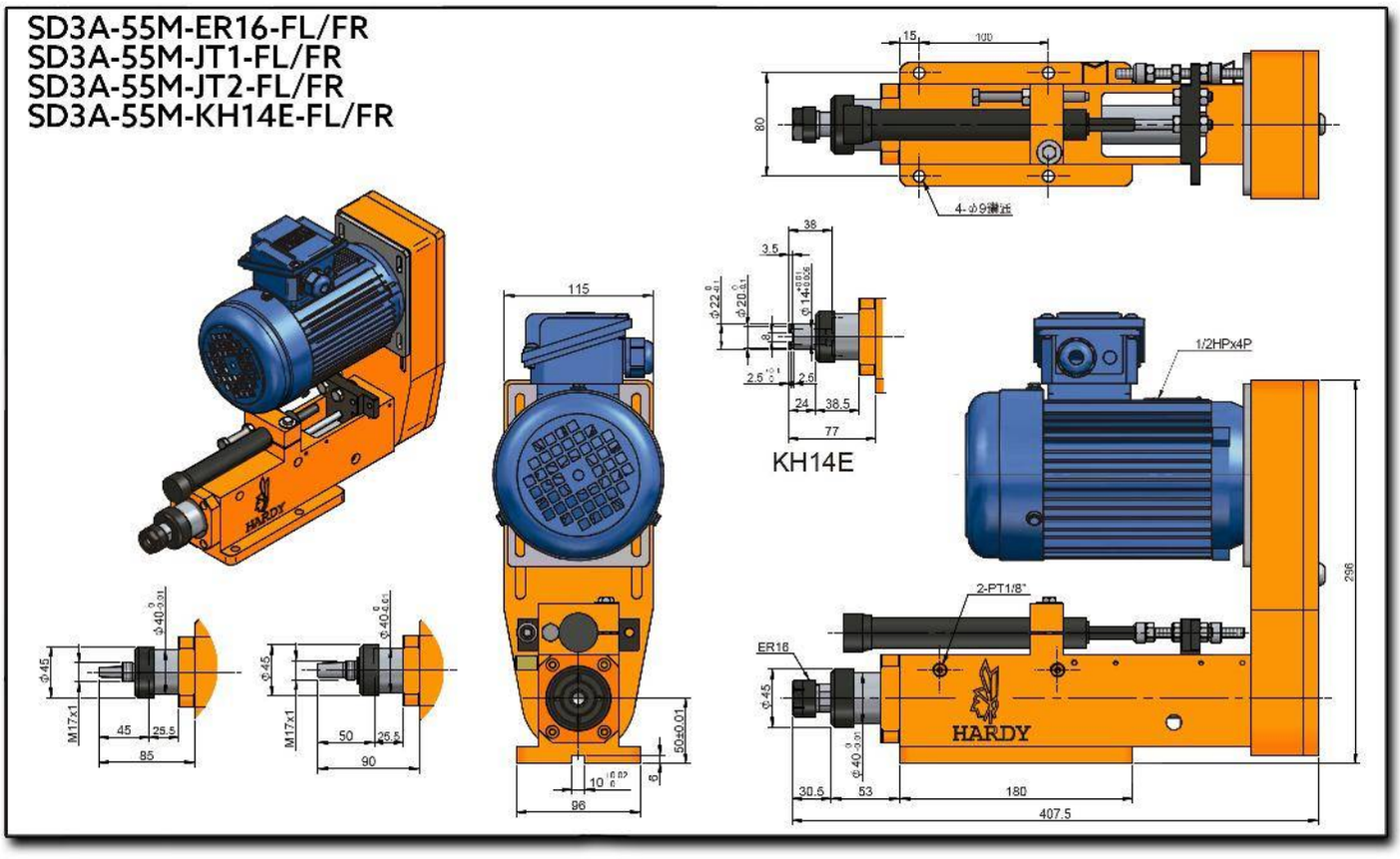
SD3A-55M-ER16-FL/FR
SD3A-55M-JT1-FL/FR
SD3A-55M-JT2-FL/FR
SD3A-55M-KH14E-FL/FR
KH14E
1/2HPx4P
2-PT1/8"
ER16
HARDY
115
96
407.5
180
296
80
15
100
38
3.5
24
38.5
77
45
25.5
85
50
90
M17x1
50±0.01
30.5
53

Characteristics & Dimensions

MODEL	SD03A-55M
Maximum Drilling Capacity (S45C)	Ø6
Maximum Spindle Stroke	55.00
Maximum Spindle Speed (r.p.m.)	10,000.00
Movement Pressure	(A) 4.00 ~ 8.00 Kg/cm²
Cylinder Diameter	(F) 12.60 cm² (B) 7.10 cm²
Maximum Power (3 Phases)	½ H.p., 220 Volts / 60 Hz.
Transmission Belt	5J - 200
Total Equipment Weight	18.00 Kg
Spindle Bearings	6002ZZ x 4
Pulley Bearings	6002ZZ x 3
Front Cover Seal	TC22 x 30 - 7 x 1 UH40 x 2
Piston O-Ring	AG-45 X 2 AG-40 X 1
Front Cover O-Ring	AG-45 x 2, AG40 x 2

*** Roundness ≤ 0.003mm.
**** All dimensions are given in milimeters.

SD3A-55M-ER16-BL/BR
SD3A-55M-JT1-BL/BR
SD3A-55M-JT2-BL/BR
SD3A-55M-KH14E-BL/BR

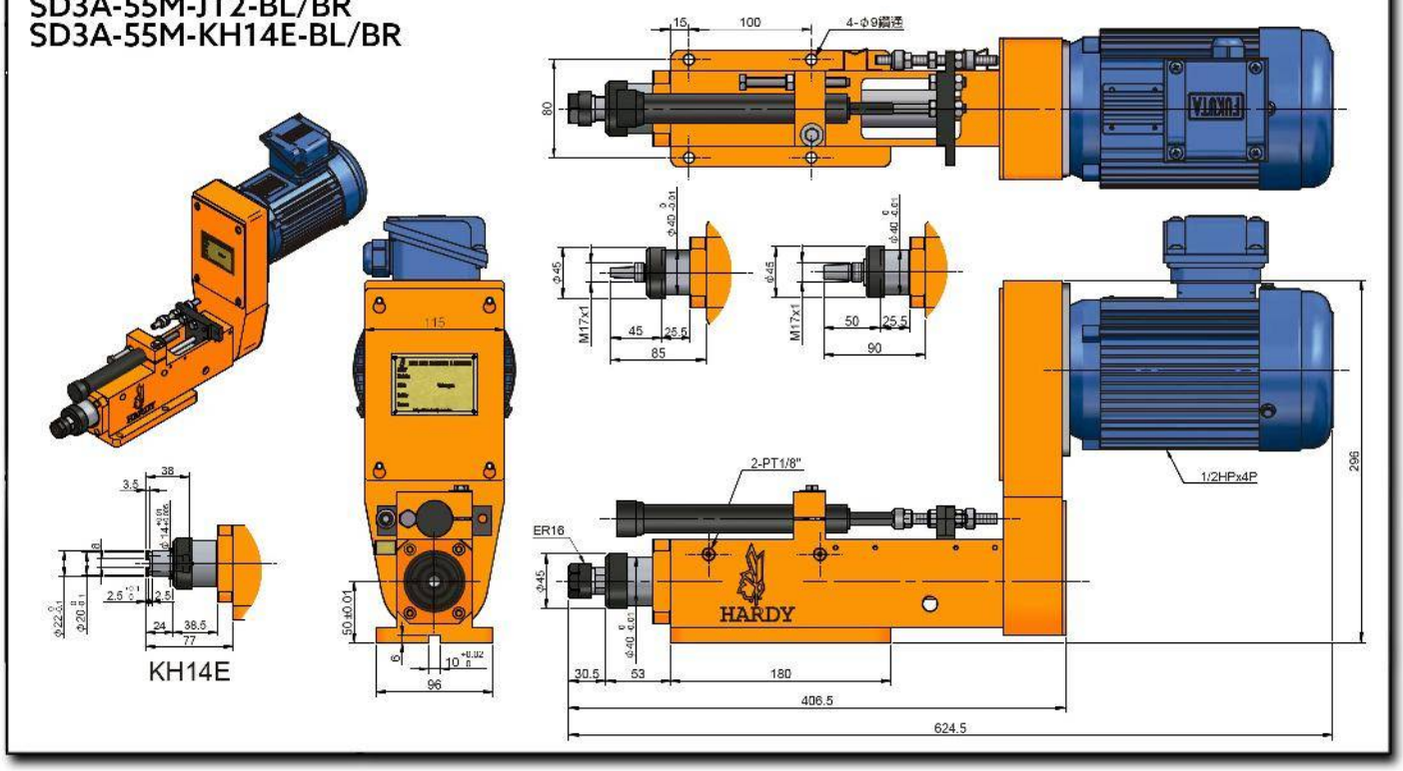

SD3A-75M

Drilling Spindle Head



Characteristics & Dimensions

MODEL	SD03A-75M
Maximum Drilling Capacity (S45C)	Ø6
Maximum Spindle Stroke	75.00
Maximum Spindle Speed (r.p.m.)	10,000.00
Movement Pressure	(A) 4.00 ~ 8.00 Kg/cm²
Cylinder Diameter	(F) 12.60 cm² (B) 7.10 cm²
Maximum Power (3 Phases)	½ H.p., 220 Volts / 60 Hz.
Transmission Belt	5J - 200
Total Equipment Weight	18.00 Kg
Spindle Bearings	6002ZZ x 4
Pulley Bearings	6002ZZ x 3
Front Cover Seal	TC22 x 30 - 7 x 1 UH40 x 2
Piston O-Ring	AG-45 X 2 AG-40 X 1
Front Cover O-Ring	AG-45 x 2, AG40 x 2

*** Roundness ≤ 0.003mm.
**** All dimensions are given in milimeters.

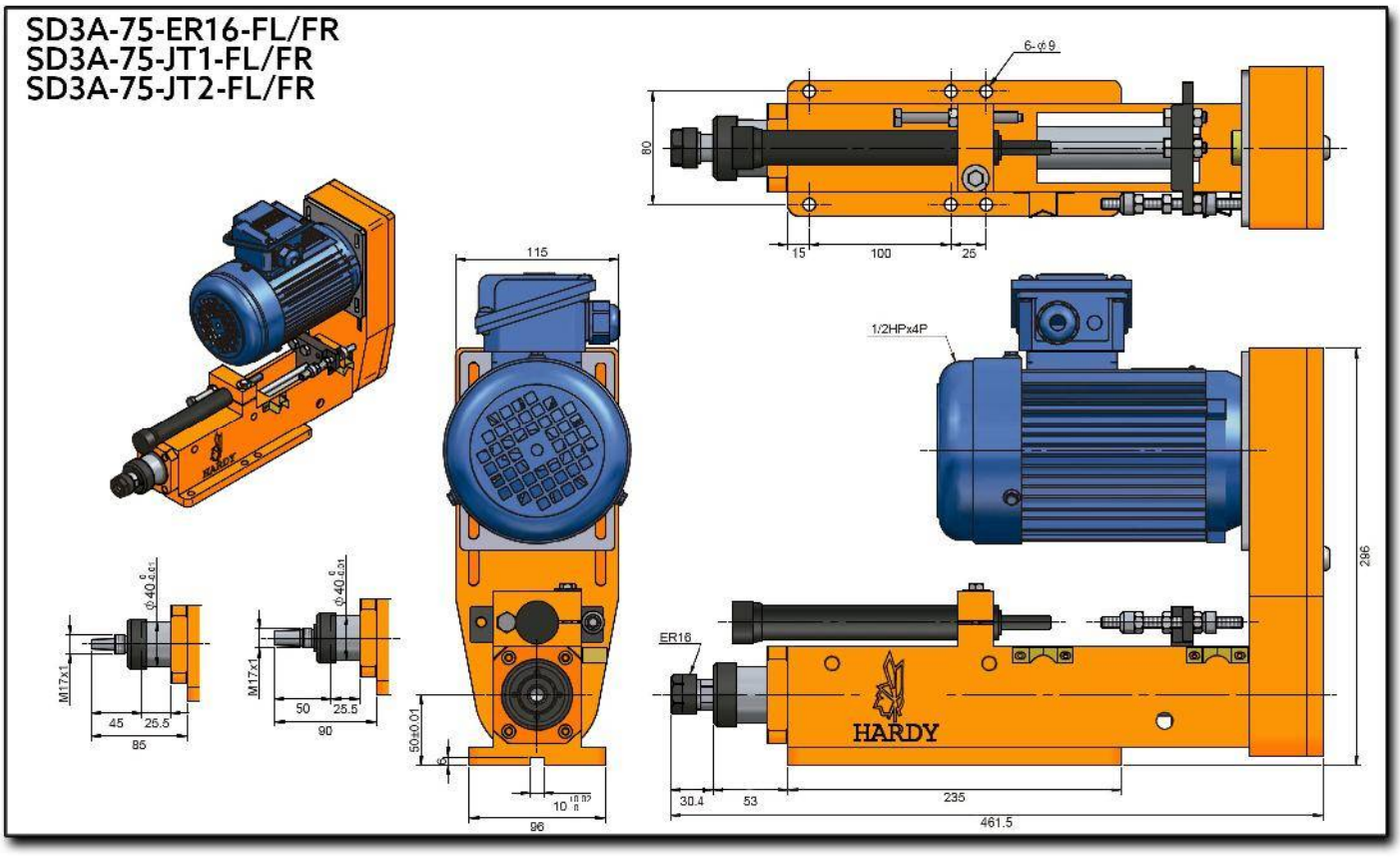
SD3A-75-ER16-FL/FR
SD3A-75-JT1-FL/FR
SD3A-75-JT2-FL/FR
6-ϕ9
80
15
100
25
115
1/2HPx4P
296
ER16
HARDY
M17x1
45
25.5
85
M17x1
50
25.5
90
50±0.01
6
10
96
30.4
53
235
461.5

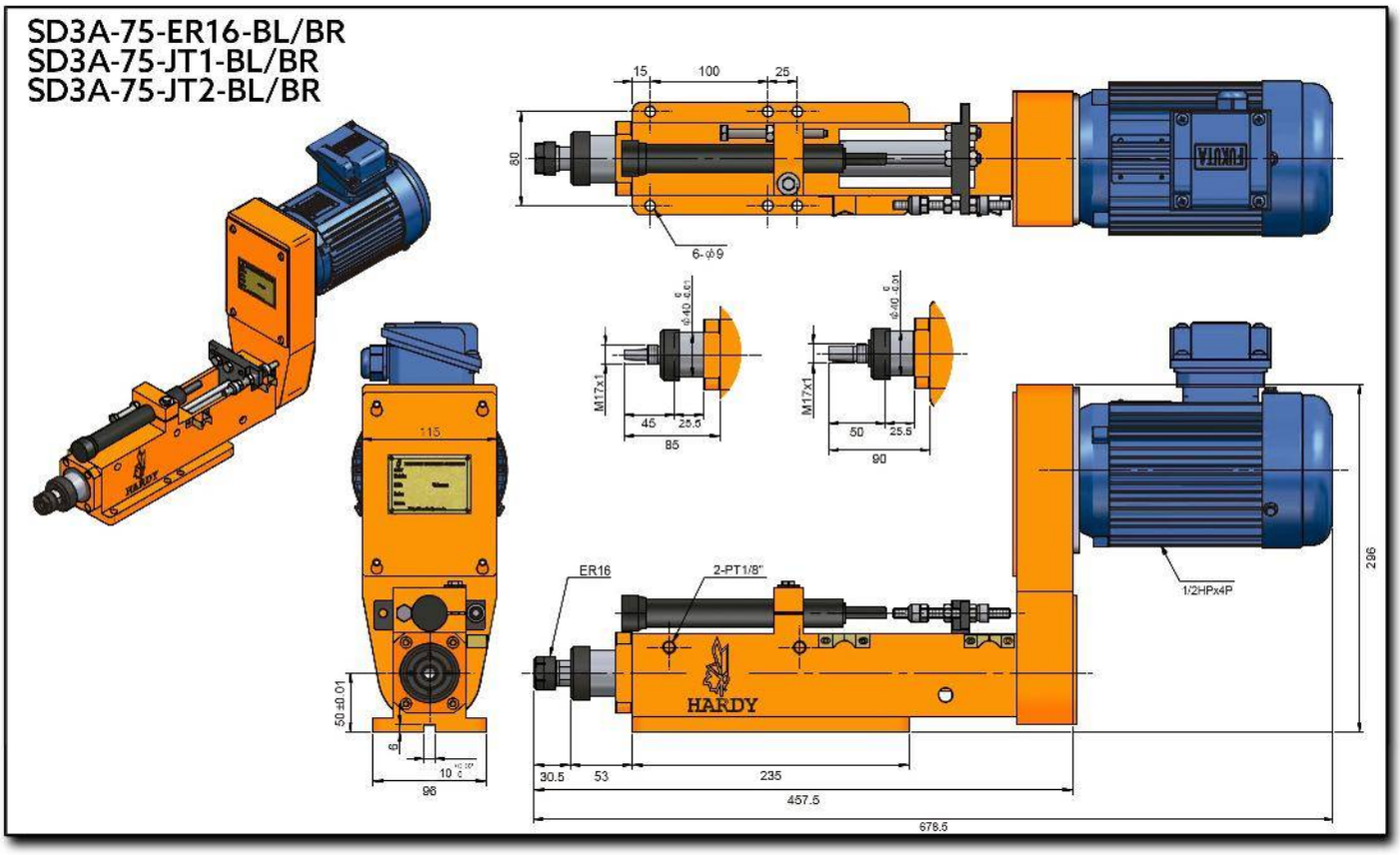
SD3A-75-ER16-BL/BR
SD3A-75-JT1-BL/BR
SD3A-75-JT2-BL/BR
15
100
25
60
6-φ9
M17x1
45
25.5
85
M17x1
50
25.5
90
115
50±0.01
10
98
ER16
2-PT1/8"
HARDY
1/2HPx4P
296
30.5
53
235
457.5
678.5

SD05-85M

Drilling Spindle Head



Characteristics & Dimensions

MODEL	SD05-85M
Maximum Drilling Capacity (S45C)	*Ø13*
Maximum Spindle Stroke	*85.00*
Maximum Spindle Speed (r.p.m.)	*5,000.00*
Movement Pressure	*20.00 ~ 25.00 Kg/cm²*
Cylinder Diameter	*(F) 21.50 cm²* *(B) 11.50 cm²*
Maximum Power (3 Phases)	*1 H.p., 220 Volts / 60 Hz.*
Transmission Belt	*5M - 615*
Total Equipment Weight	*38.00 Kg*
Spindle Bearings	*6004ZZ x 4*
Pulley Bearings	*6203ZZ x 3*
Front Cover Seal	*DKB 50-62-10 x 1*
Piston O-Ring	*AP-53 x 3*
Front Cover O-Ring	*AG-58 x 2* *AP-50 x 2* *AG-68 x 1*

**** Roundness ≤ 0.003mm.*
***** All dimensions are given in milimeters.*

SD05-85M-ER20-FL/FR (Hidráulico)
SD05-85M-JT6-FL/FR (Hidráulico)

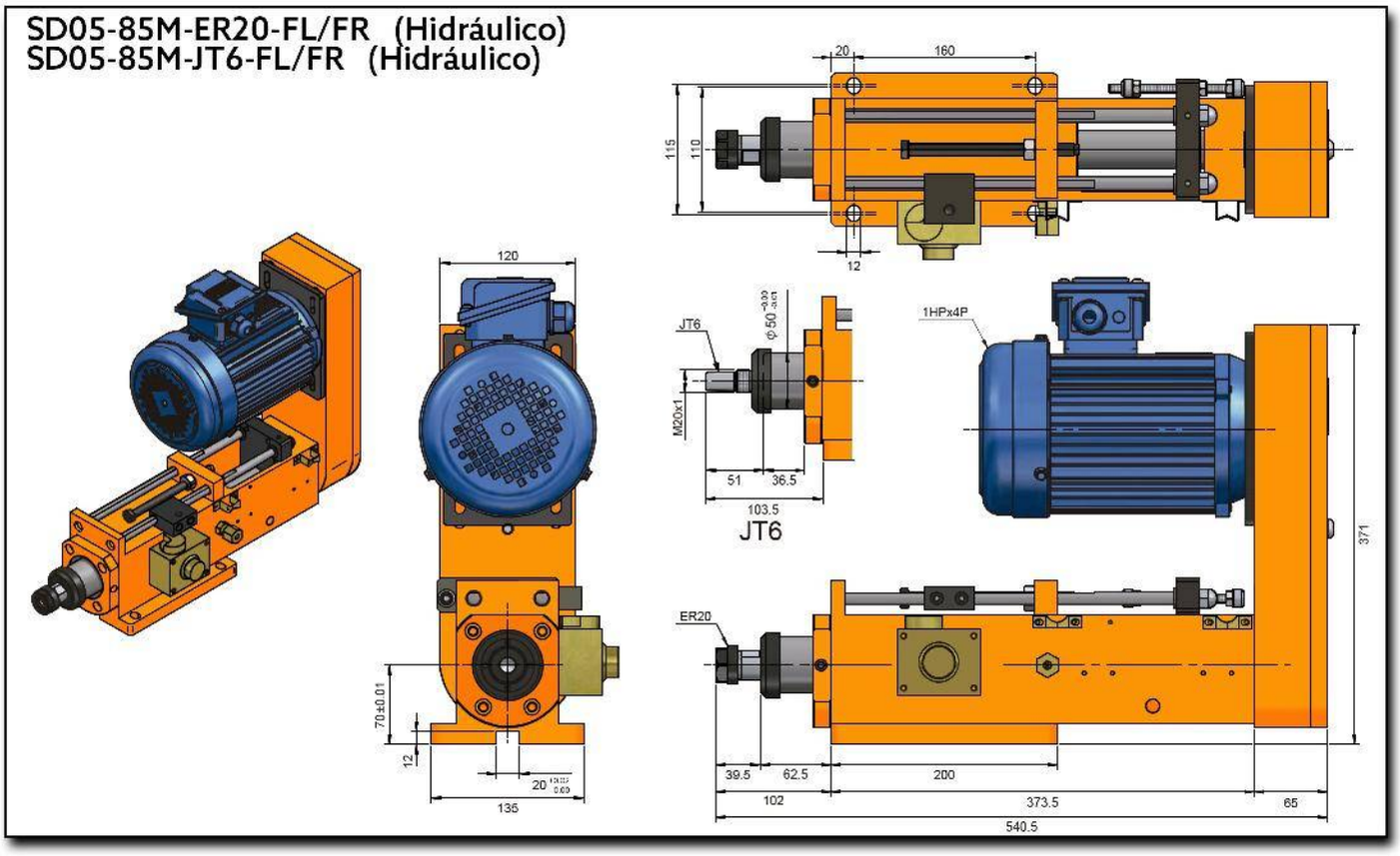

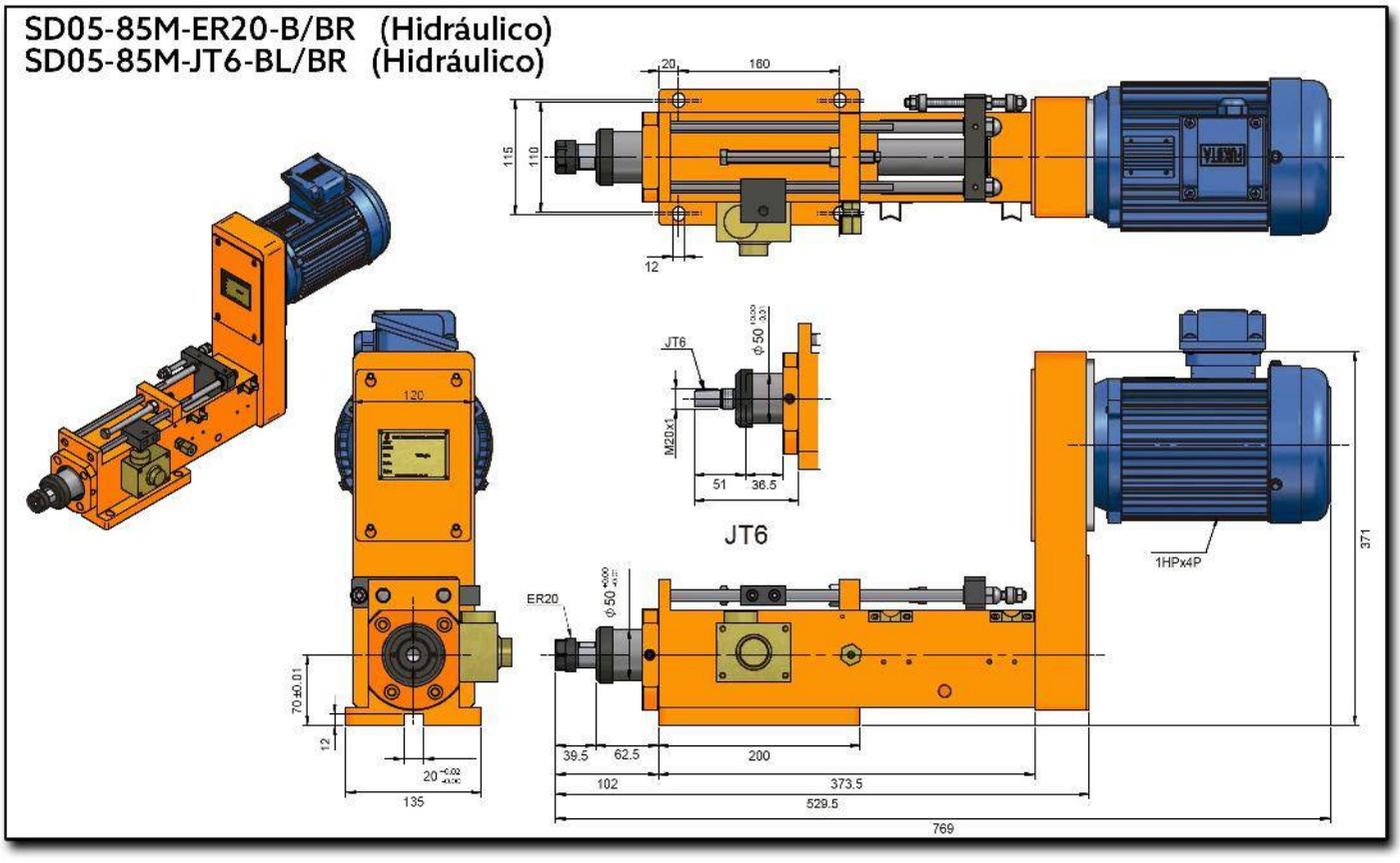
SD05-85M-ER20-B/BR (Hidráulico)
SD05-85M-JT6-BL/BR (Hidráulico)
20
160
115
110
12
JT6
M20x1
51
36.5
JT6
1HPx4P
371
ER20
39.5
62.5
200
102
373.5
529.5
769
120
70±0.01
12
135

SD05A-80M

Drilling Spindle Head

(Pneumatic)



Characteristics & Dimensions

MODEL	SD05A-85M
Maximum Drilling Capacity (S45C)	*Ø13*
Maximum Spindle Stroke	*85.00*
Maximum Spindle Speed (r.p.m.)	*5,000.00*
Movement Pressure	*4.00 ~ 8.00 Kg/cm²*
Cylinder Diameter	*(F) 21.50 cm²* *(B) 11.50 cm²*
Maximum Power (3 Phases)	*1 H.p., 220 Volts / 60 Hz.*
Transmission Belt	*5M - 615*
Total Equipment Weight	*38.00 Kg*
Spindle Bearings	*6004ZZ x 4*
Pulley Bearings	*6203ZZ x 3*
Front Cover Seal	*DKB 50-62-10 x 1*
Piston O-Ring	*UHA-53 x 2*
Front Cover O-Ring	*AG-58 x 2* *AP-50 x 1* *AG-50 x 1* *AG-68 x 1*

**** Roundness ≤ 0.003mm.*
***** All dimensions are given in milimeters.*

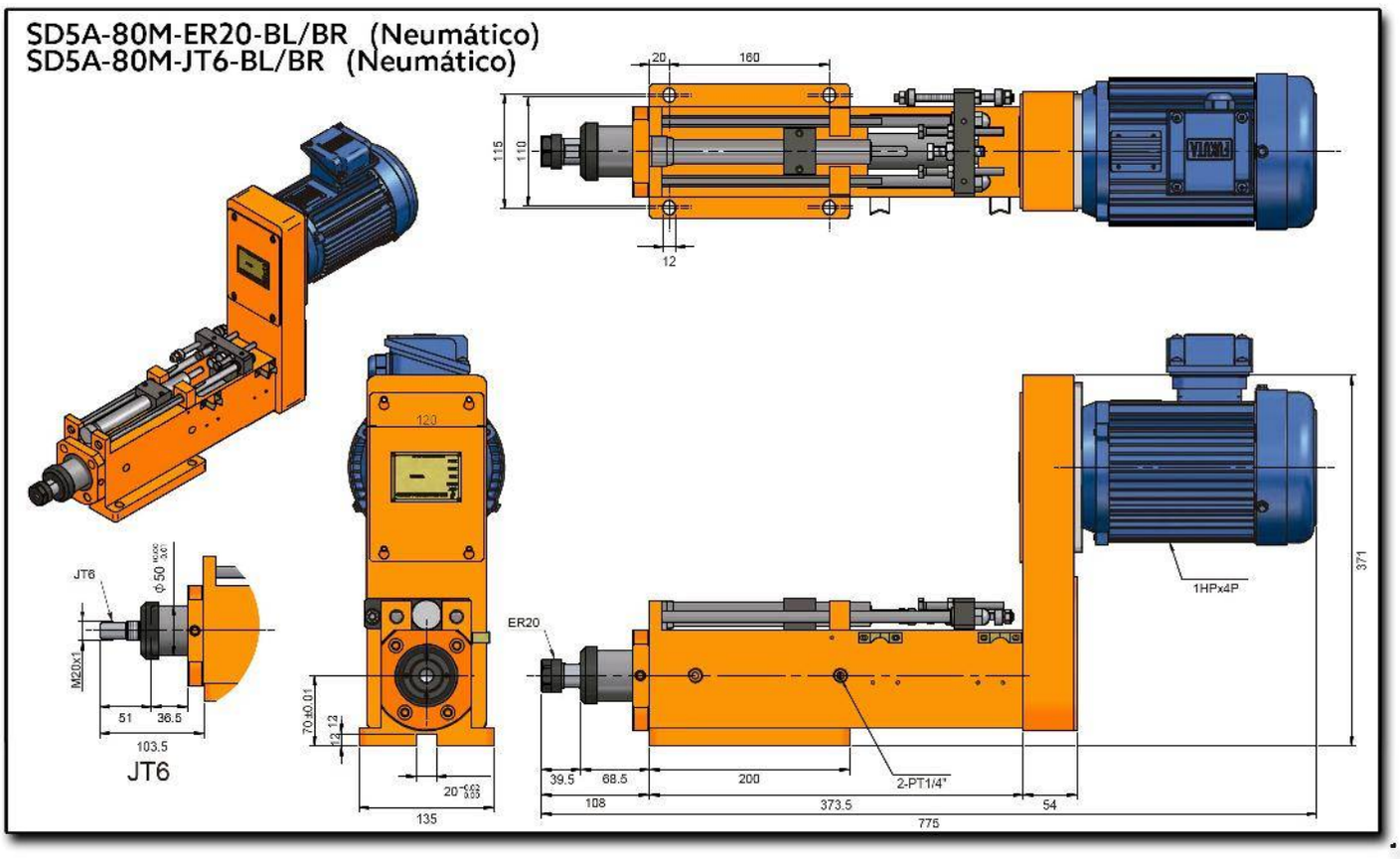
SD5A-80M-ER20-BL/BR (Neumático)
SD5A-80M-JT6-BL/BR (Neumático)
20
160
115
110
12
120
JT6
ϕ 50
M20x1
51
36.5
103.5
JT6
70±0.01
12
135
ER20
39.5
68.5
200
2-PT1/4"
108
373.5
54
775
1HPx4P
371

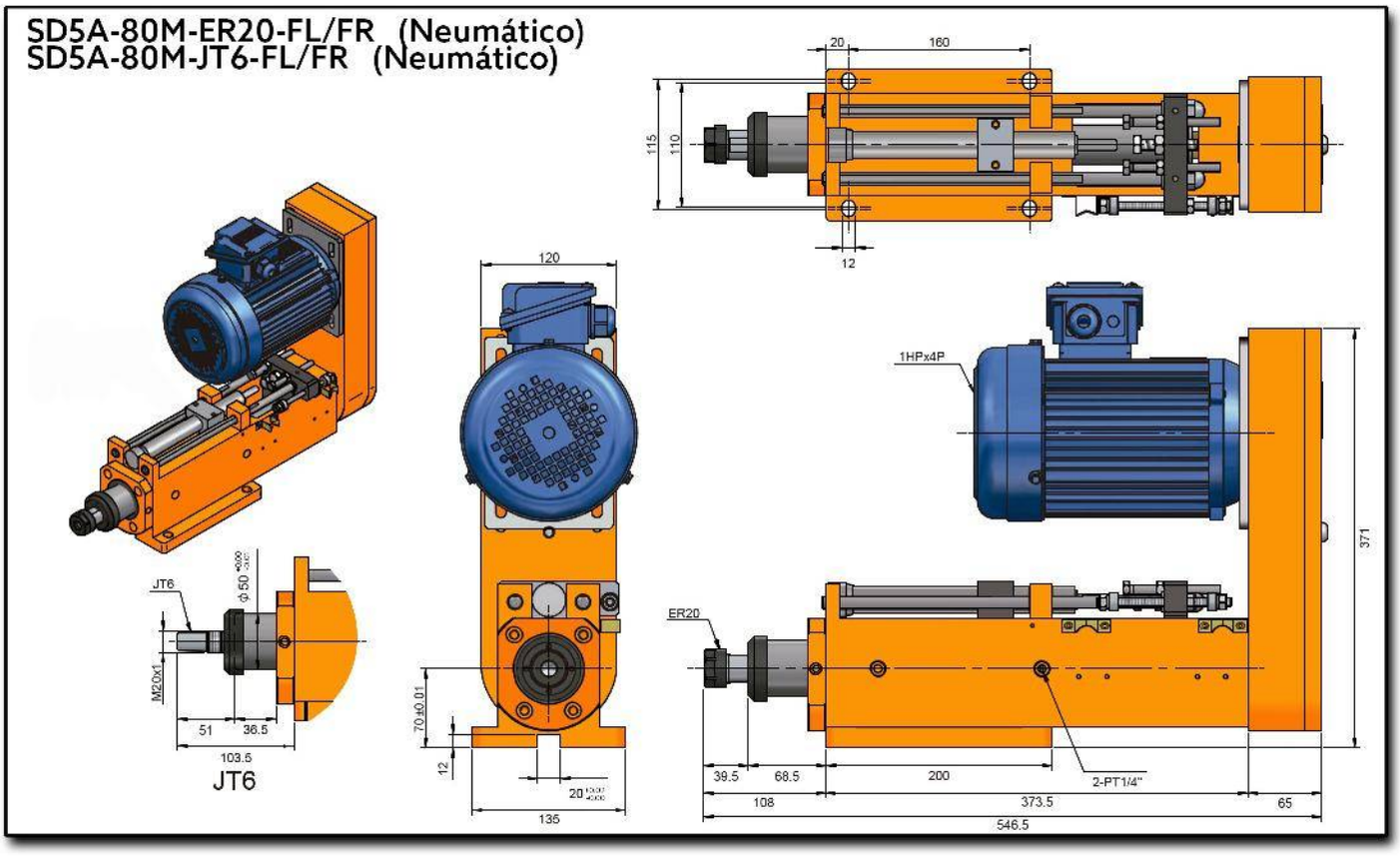
SD5A-80M-ER20-FL/FR (Neumático)
SD5A-80M-JT6-FL/FR (Neumático)
20
160
115
110
12
120
1HPx4P
371
JT6
M20x1
51
36.5
103.5
JT6
70±0.01
12
135
ER20
39.5
68.5
200
2-PT1/4"
108
373.5
65
546.5

SD07-130M

Drilling Spindle Head



Characteristics & Dimensions

MODEL	SD07-130M
Maximum Drilling Capacity (S45C)	*Ø20*
Maximum Spindle Stroke	*130.00*
Maximum Spindle Speed (r.p.m.)	*2,500.00*
Movement Pressure	*(H) 20.00 ~ 30.00 Kg/cm2*
Cylinder Diameter	*(F) 37.00 cm2* *(B) 15.90 cm2*
Maximum Power (3 Phases)	*1 H.p., 220 Volts / 60 Hz.*
Transmission Belt	*A2 x Ø100, 8M x 40T X 50W*
Total Equipment Weight	*57.00 Kg*
Spindle Bearings	*6004Z, 32004* *6005Z, 32005*
Pulley Bearings	*6008Z, 51208*
Front Cover Seal	*TC60 x 70 x 10*
Piston O-Ring	*AP-65 x 2, AG-70 x 1, TC32-52 x 10*
Front Cover O-Ring	*AP-60 x 2, AG-70 x 1, AG-80 x 1*

**** Roundness ≤ 0.003mm.*
***** All dimensions are given in milimeters.*

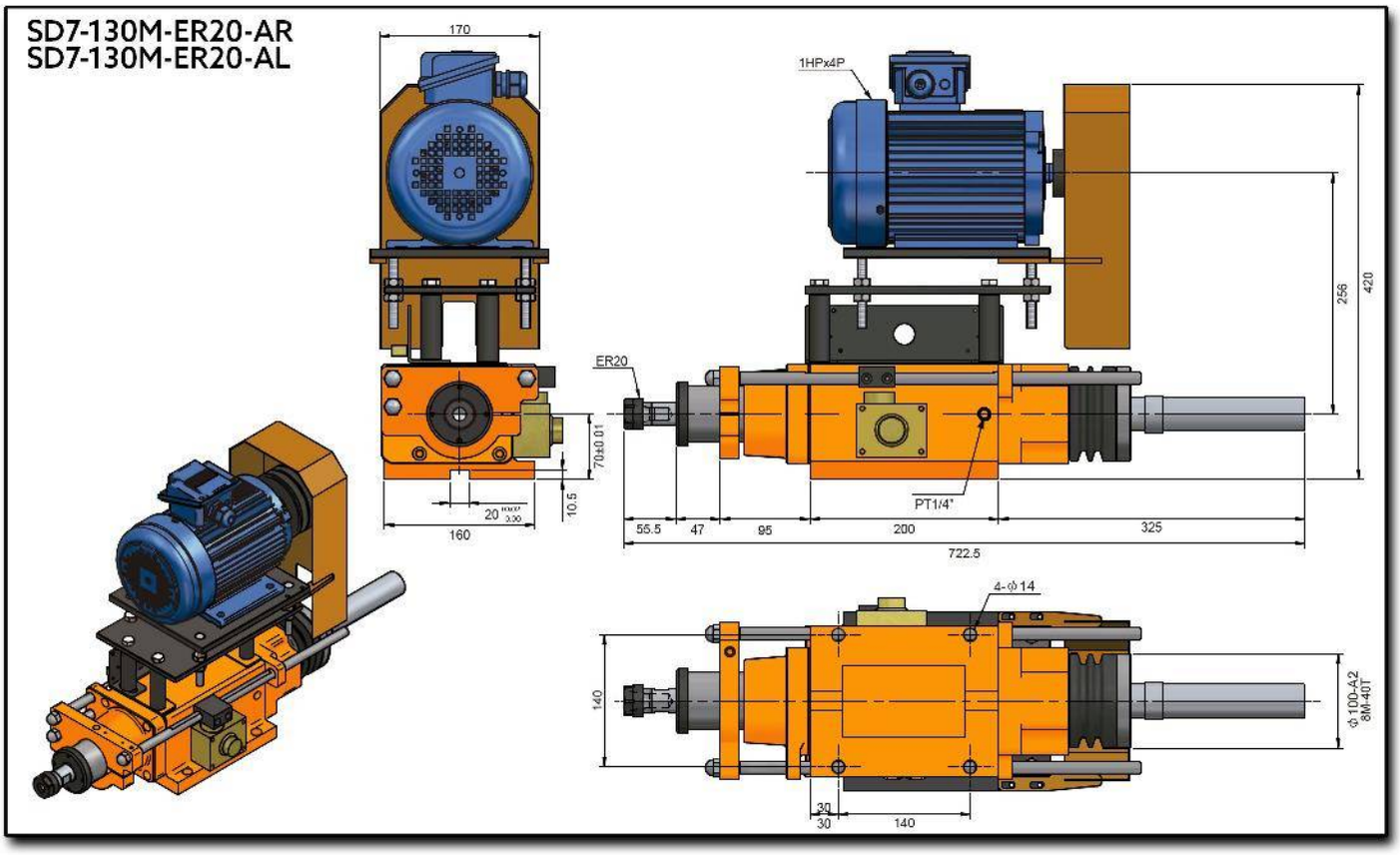
SD7-130M-ER20-AR
SD7-130M-ER20-AL
170
160
20
10.5
70±0.01
1HPx4P
ER20
PT1/4"
256
420
55.5
47
95
200
325
722.5
4-φ14
140
30
30
140
φ100-A2
8M-40T

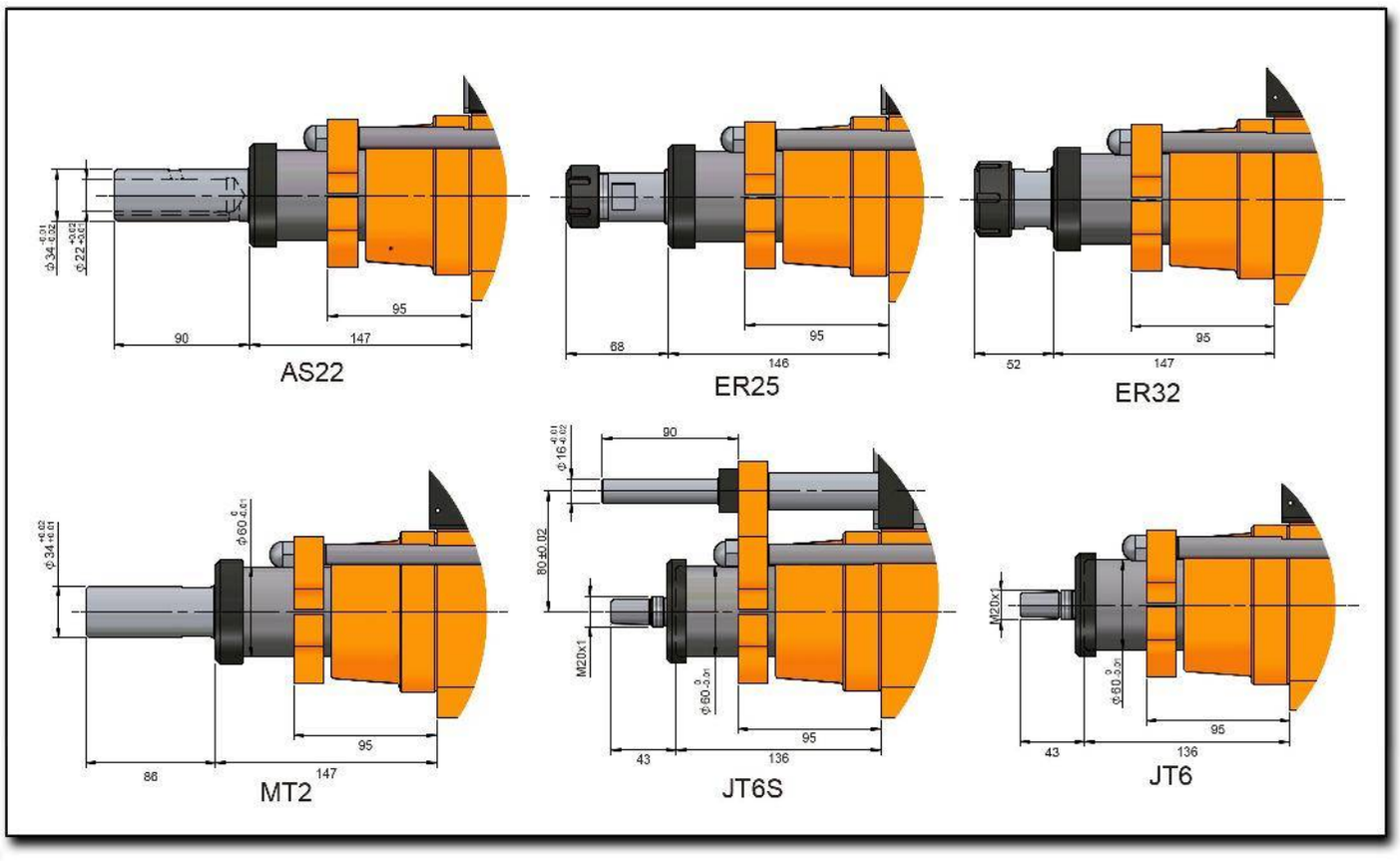
AS22
90
147
95
ER25
88
146
95
ER32
52
147
95
MT2
86
147
95
JT6S
90
80±0.02
M20x1
43
136
95
JT6
M20x1
43
136
95

SD8-150M

Drilling Spindle Head



Characteristics & Dimensions

MODEL	SD08-150M
Maximum Drilling Capacity (S45C)	Ø35
Maximum Spindle Stroke	150.00
Maximum Spindle Speed (r.p.m.)	1,500.00
Movement Pressure	(H) 20.00 ~ 35.00 Kg/cm2
Cylinder Diameter	(F) 71.20 cm2 (B) 31.40 cm2
Maximum Power (3 Phases)	2 H.p., 220 Volts / 60 Hz.
Transmission Belt	B2 x Ø150, 8M x 58T X 56W
Total Equipment Weight	103.00 Kg
Spindle Bearings	6008Z, 32008 6010Z, 32010
Pulley Bearings	6213Z, 51213
Front Cover Seal	TC90 x 110 x 12
Piston O-Ring	AP-100 x 3, AG-65 x 1, TC60-82 x 12
Front Cover O-Ring	AP-90 x 2, AG-100 x 1, AG-115 x 1

*** Roundness ≤ 0.003mm.
**** All dimensions are given in milimeters.

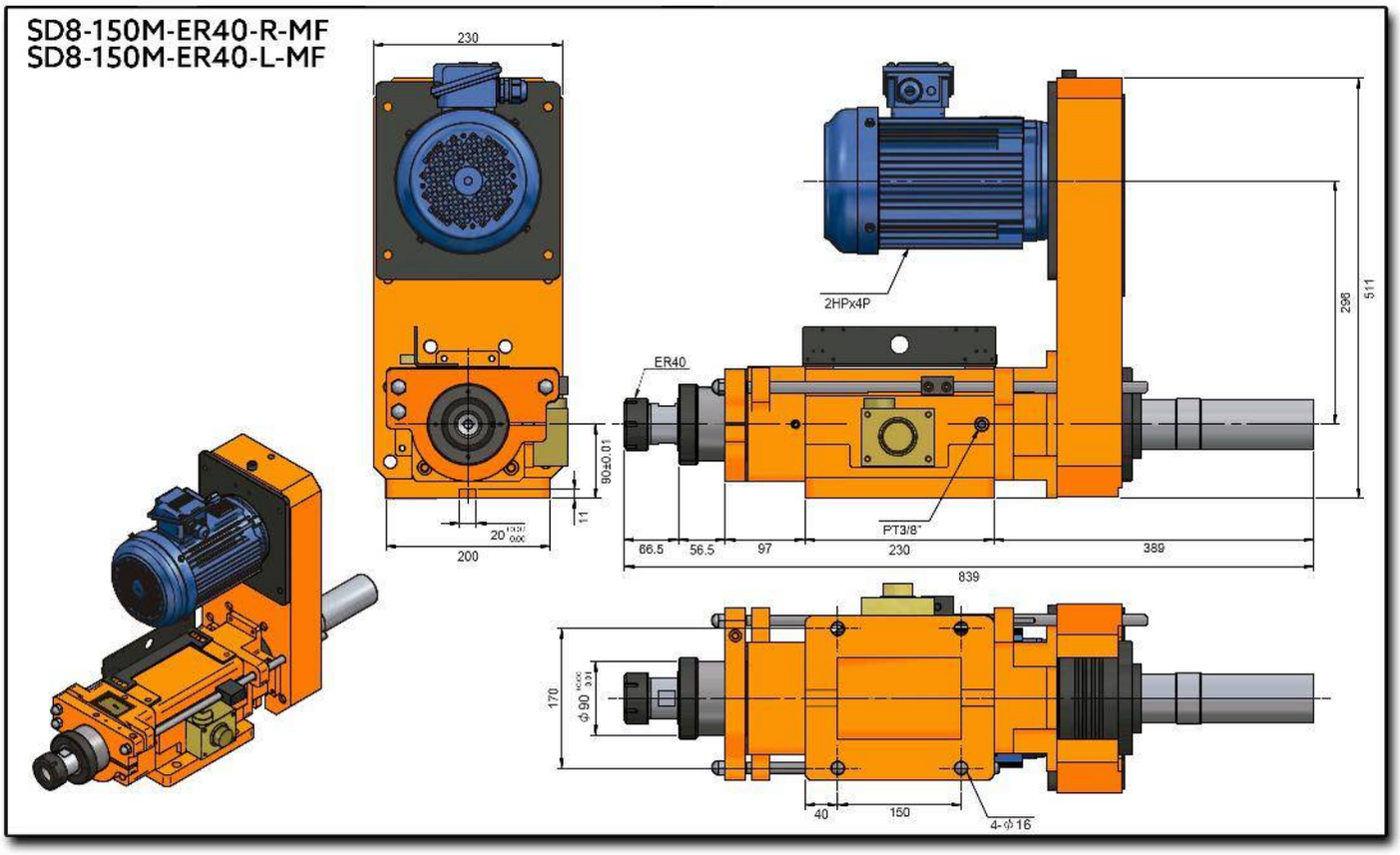
SD8-150M-ER40-R-MF
SD8-150M-ER40-L-MF
230
2HPx4P
ER40
PT3/8"
90±0.01
11
200
66.5
56.5
97
230
389
839
296
511
170
40
150
4-Φ16

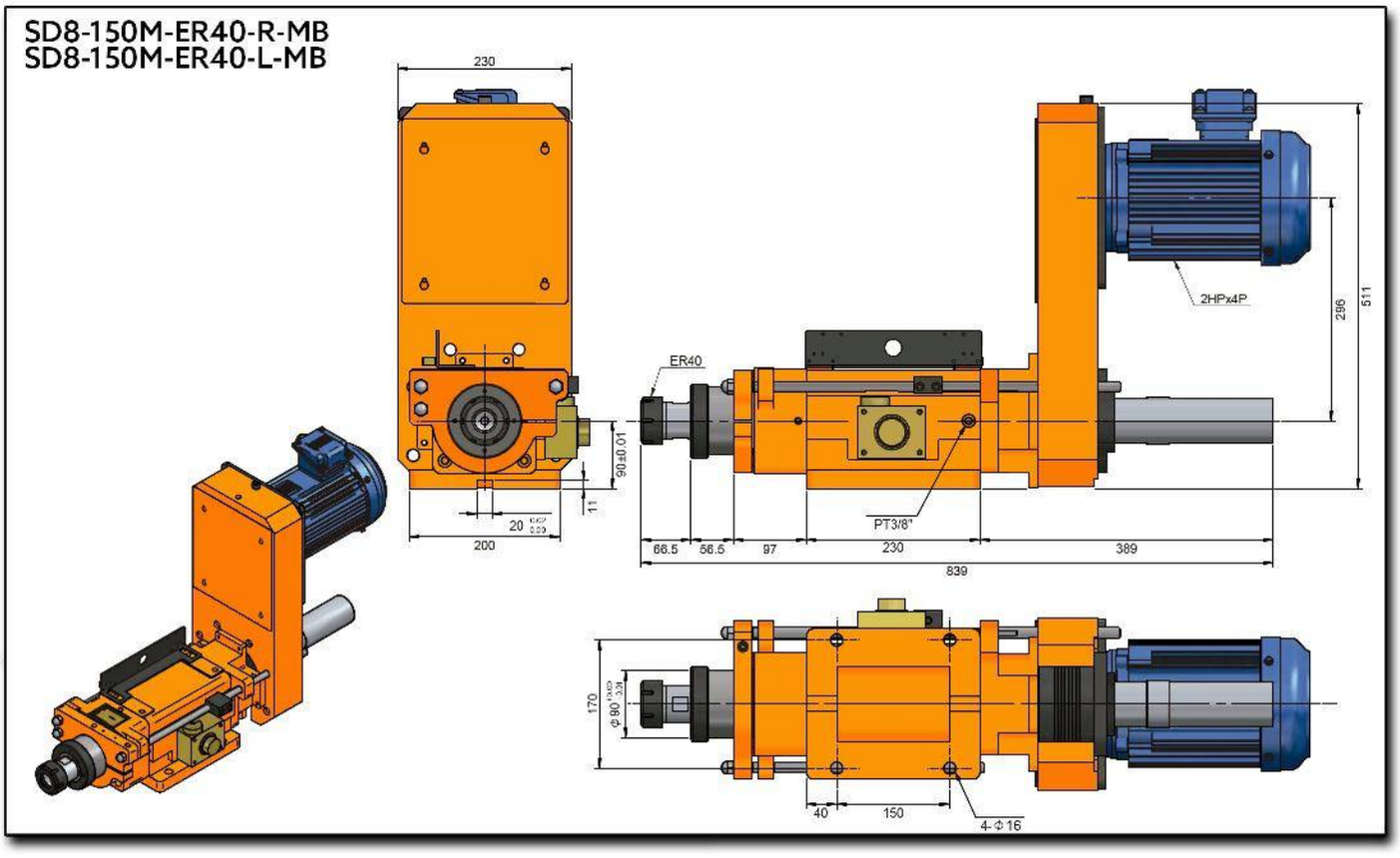
SD8-150M-ER40-R-MB
SD8-150M-ER40-L-MB
230
200
20
11
90±0.01
ER40
2HPx4P
296
511
PT3/8"
66.5
56.5
97
230
389
839
170
40
150
4-Φ16

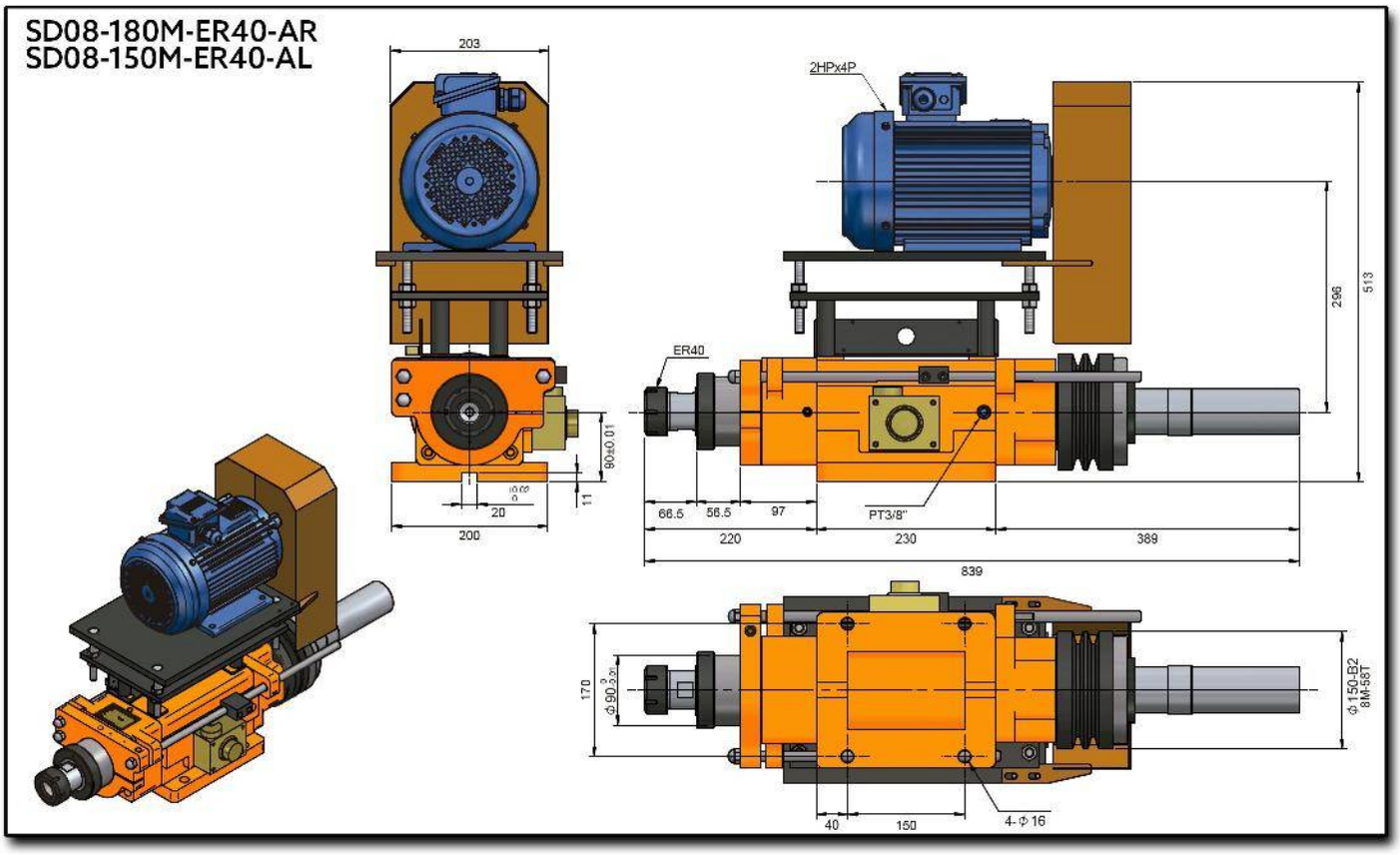
SD08-180M-ER40-AR
SD08-150M-ER40-AL
203
2HPx4P
ER40
296
513
80±0.01
11
20
200
66.5
56.5
97
PT3/8"
220
230
389
839
170
40
150
4-Φ16

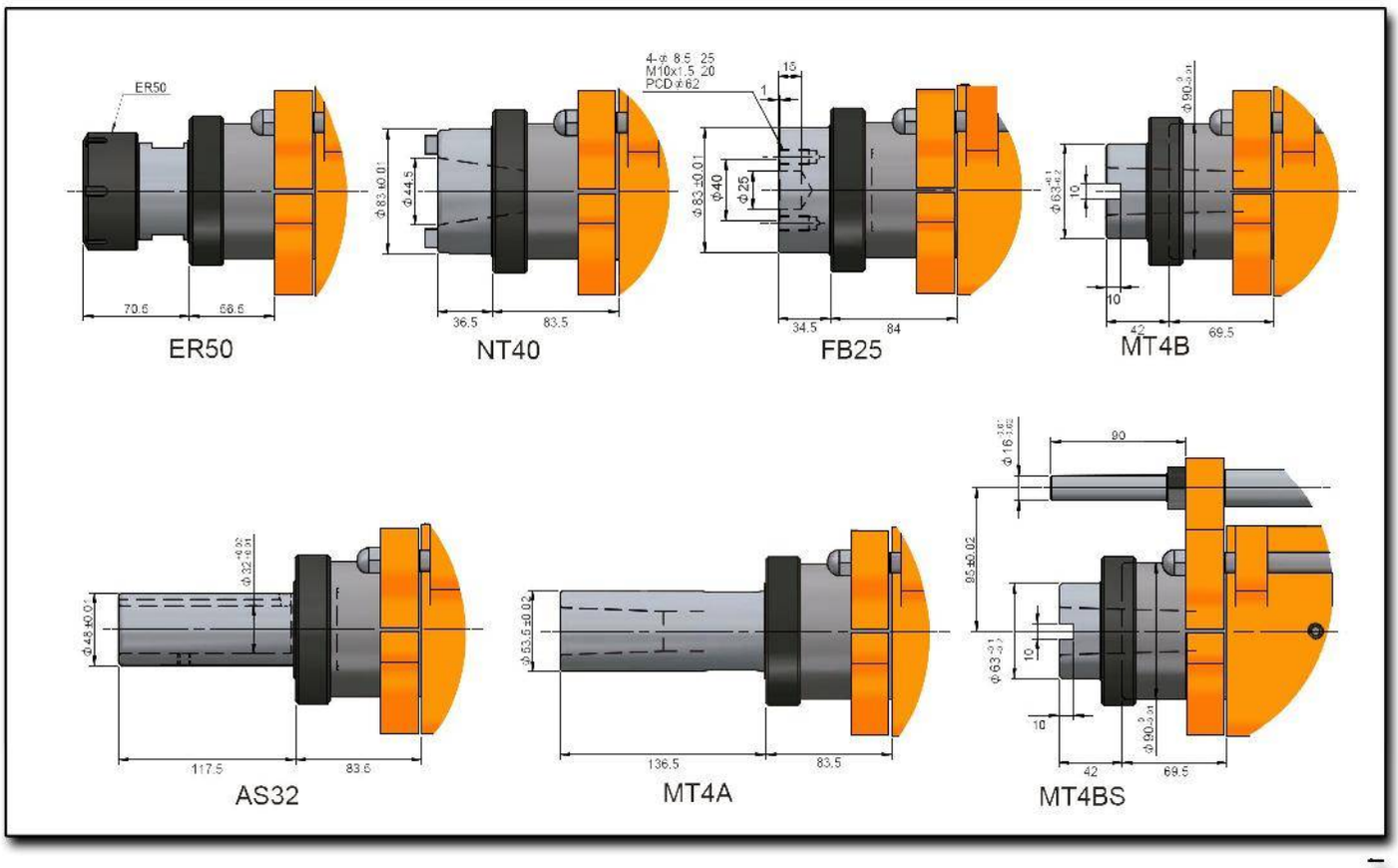
ER50
70.6
58.6
ER50
Φ83 ±0.01
Φ44.5
36.5
83.5
NT40
4-Φ 8.5 ↓25
M10x1.5 ↓20
PCD Φ62
15
1
Φ83 ±0.01
Φ40
Φ25
34.5
84
FB25
Φ90.3 -0.01
Φ63 -0.1 -0.2
10
10
42
69.5
MT4B
Φ48 ±0.01
Φ32 -0.02 -0.01
117.5
83.6
AS32
Φ63.5 ±0.02
136.5
83.5
MT4A
90
Φ16 +0.18 +0.02
95 ±0.02
Φ63 -0.1 -0.2
10
10
Φ90.3 -0.01
42
69.5
MT4BS

SD8-200M
Drilling Spindle Head



Characteristics & Dimensions

MODEL	SD08-200M
Maximum Drilling Capacity *(S45C)*	*Ø35*
Maximum Spindle Stroke	*200.00*
Maximum Spindle Speed *(r.p.m.)*	*1,500.00*
Movement Pressure	*(H) 20.00 ~ 35.00 Kg/cm2*
Cylinder Diameter	*(F) 71.20 cm2* *(B) 31.40 cm2*
Maximum Power *(3 Phases)*	*2 H.p., 220 Volts / 60 Hz.*
Transmission Belt	*B2 x Ø150, 8M x 58T X 56W*
Total Equipment Weight	*106.00 Kg*
Spindle Bearings	*6008Z, 32008* *6010Z, 32010*
Pulley Bearings	*6213Z, 51213*
Front Cover Seal	*TC90 x 110 x 12*
Piston O-Ring	*AP-100 x 3 | AG-65 x 1 | TC60-82 x 12*
Front Cover O-Ring	*AP-90 x 2 | AG-100 x 1 | AG-115 x 1*
Spindle Head Advance Movement	*Hydraulic*

**** Roundness ≤ 0.003mm.*
***** All dimensions are given in milimeters.*

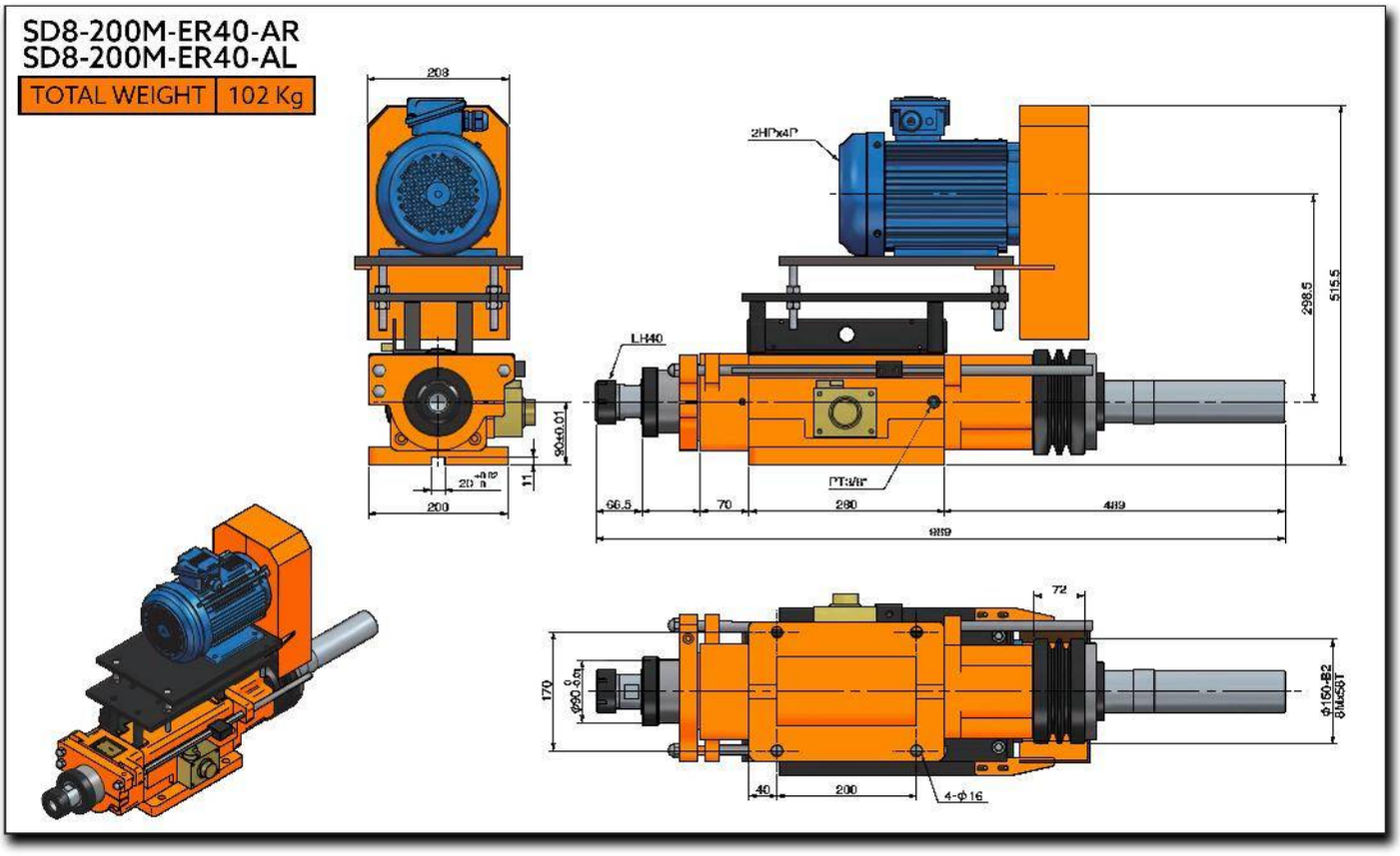
SD8-200M-ER40-AR
SD8-200M-ER40-AL
TOTAL WEIGHT 102 Kg
203
2HPx4P
LH40
298.5
515.5
90±0.01
11
200
66.5
70
280
489
889
72
170
40
200
4-ϕ16

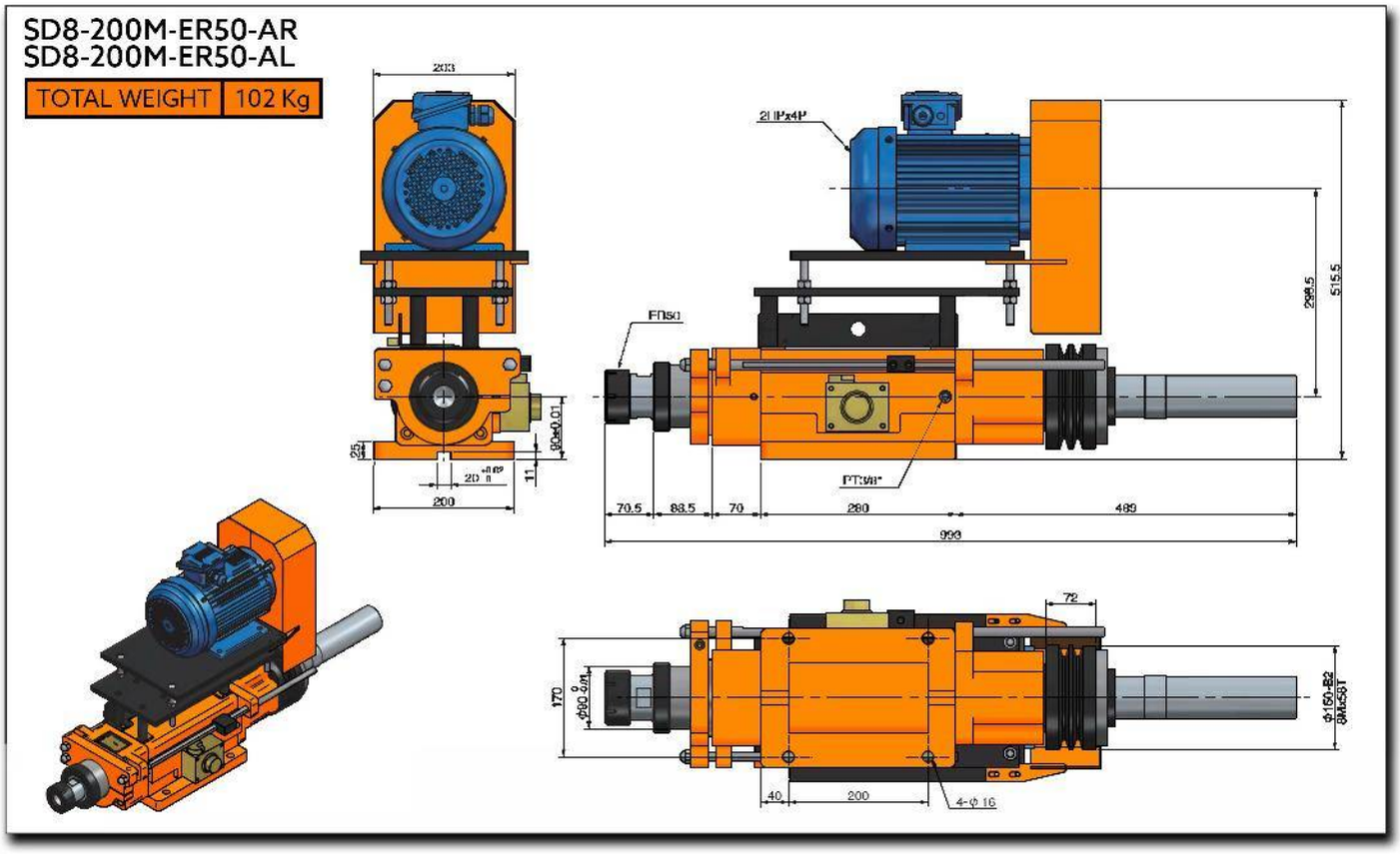
SD8-200M-ER50-AR
SD8-200M-ER50-AL
TOTAL WEIGHT
102 Kg
203
200
70.5
88.5
70
280
489
993
515.5
72
170
40
200
4-φ 16

SD09-120

Hydraulic Boring & Milling Spindle Head

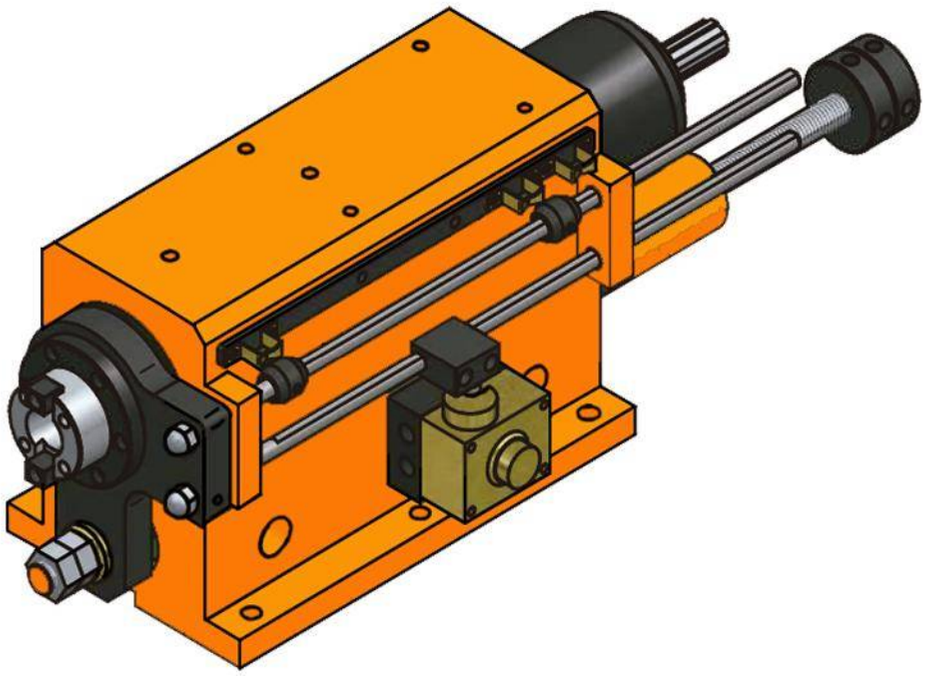

Characteristics & Dimensions

MODEL	SD09-120M
Maximum Drilling Capacity (S45C)	Ø25
Maximum Spindle Stroke	120.00
Maximum Spindle Speed (r.p.m.)	3,000.00
Movement Pressure	(H) 20.00 ~ 28.00 Kg/cm^2
Cylinder Diameter	14.70 cm^2 (Ø50 : Ø25)
Maximum Power (3 Phases)	2 H.p. x 4P (220 Volts / 60 Hz)
Transmission Belt	5M-66T / Ø102.30 x J x 20.00
Total Equipment Weight	94.00 Kg
Spindle Bearings	6007Z x 1 | 6006Z x 1 32007 x 1 | 32006 x 1
Pulley Bearongs	6010ZZ x 2
Front Cover Seal	TC90 - 110 - 12 x 1
Piston Seal	TC50 - 65 - 8 x 1
Type Of Movement	Hydraulic

*** Roundness ≤ 0.003mm.
**** All dimensions are given in milimeters.

SD09-NT30
SD09-HSK50

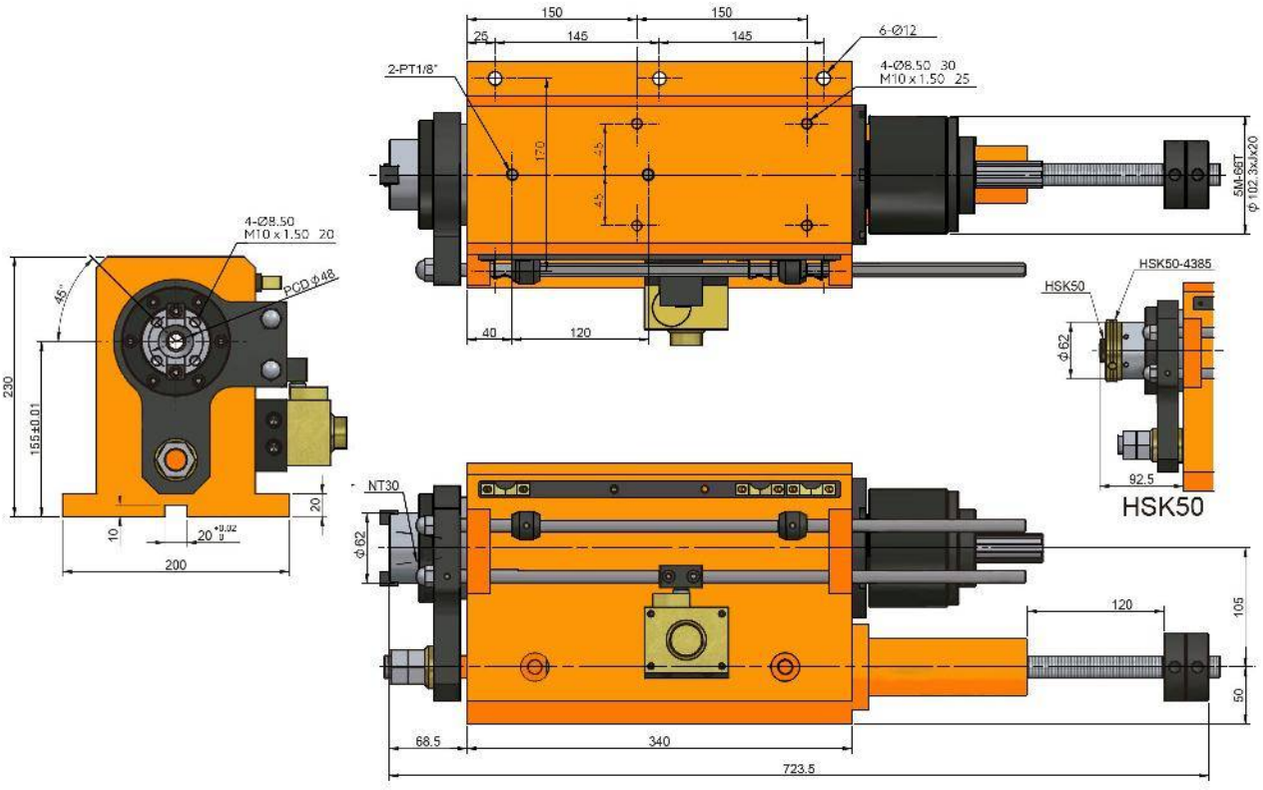

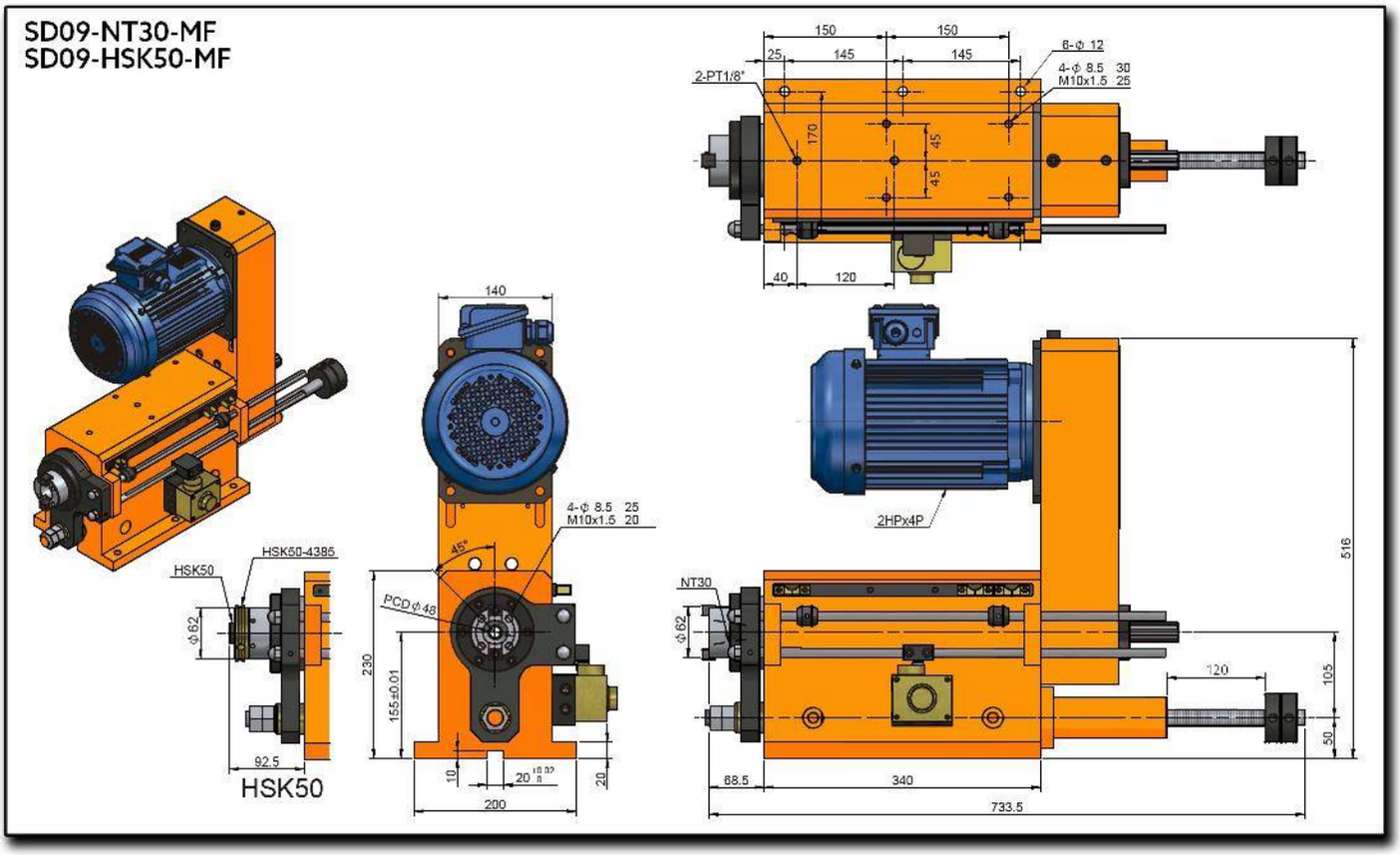
SD09-NT30-MF
SD09-HSK50-MF
150
150
25
145
145
6-Φ 12
4-Φ 8.5 30
M10x1.5 25
2-PT1/8"
170
45°
45°
40
120
140
4-Φ 8.5 25
M10x1.5 20
45°
PCD Φ48
230
155±0.01
10
20
200
HSK50
HSK50-4385
Φ62
92.5
HSK50
2HPx4P
NT30
Φ62
516
120
105
50
88.5
340
733.5

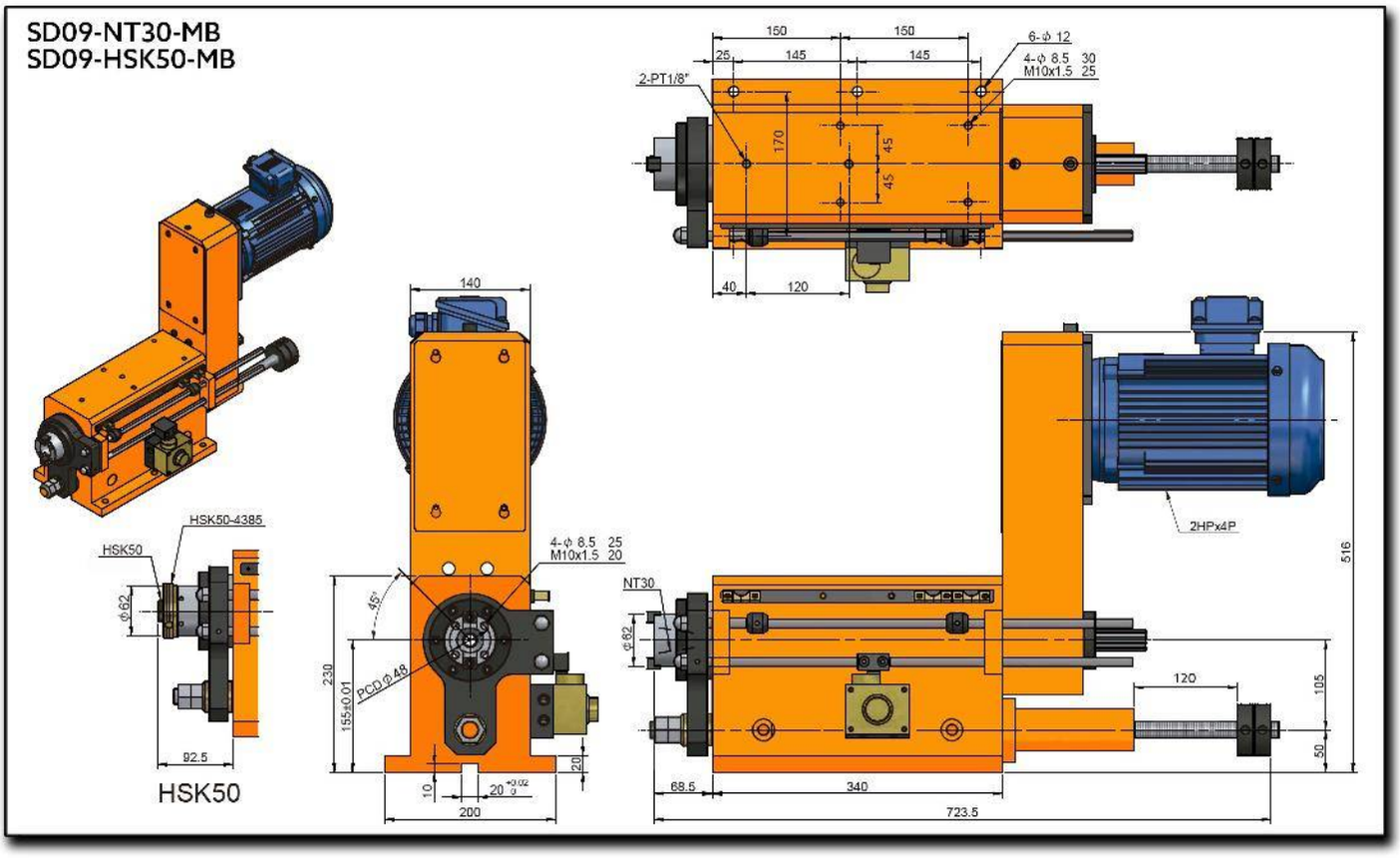
SD09-NT30-MB
SD09-HSK50-MB
150
150
25
145
145
6-ϕ 12
4-ϕ 8.5 30
M10x1.5 25
2-PT1/8"
170
45
45
40
120
140
HSK50-4385
HSK50
ϕ62
92.5
HSK50
4-ϕ 8.5 25
M10x1.5 20
45°
PCD ϕ 48
230
155±0.01
10
20 +0.02 0
20
200
NT30
ϕ62
2HPx4P
516
120
105
50
68.5
340
723.5

SD09H-120

Hi Performance Hydraulic Boring & Milling Spindle Head

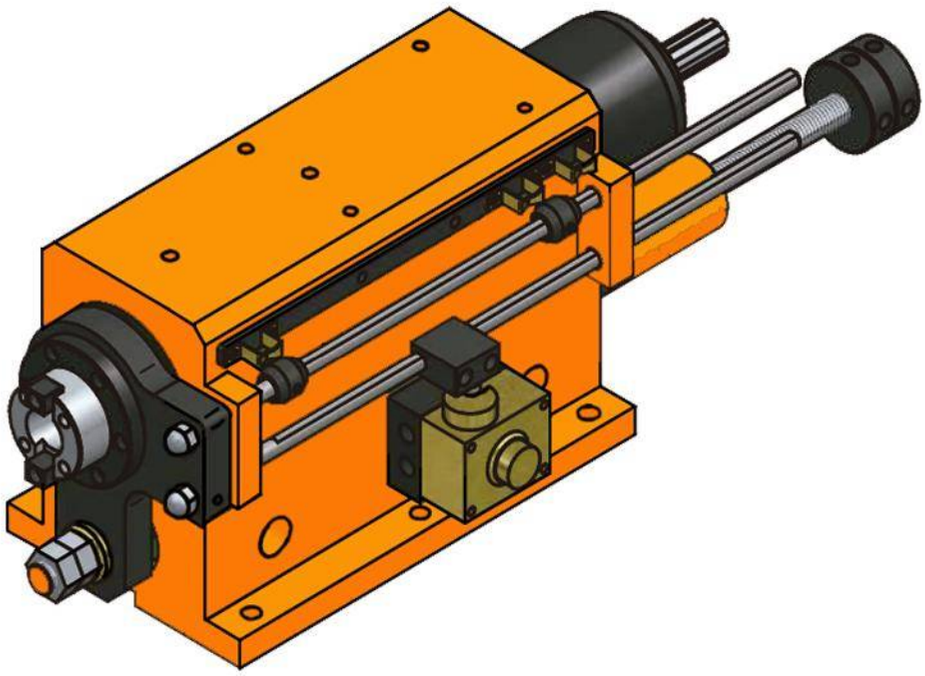

Characteristics & Dimensions

MODEL	SD09H-120M
Maximum Drilling Capacity (S45C)	Ø25
Maximum Spindle Stroke	120.00
Maximum Spindle Speed (r.p.m.)	8,000.00
Movement Pressure	(H) 20.00 ~ 28.00 Kg/cm^2
Cylinder Diameter	14.70 cm^2 (Ø50 : Ø25)
Maximum Power (3 Phases)	2 H.p. x 4P (220 Volts / 60 Hz)
Transmission Belt	5M-66T / Ø102.30 x J x 20.00
Total Equipment Weight	94.00 Kg
Spindle Bearings	7007 x 2 7006 x 2
Pulley Bearongs	6010ZZ x 2
Front Cover Seal	TC90 - 110 - 12 x 1
Piston Seal	TC50 - 65 - 8 x 1
Type Of Movement	Hydraulic

*** Roundness ≤ 0.003mm.
**** All dimensions are given in milimeters.

SD09H-NT30
SD09H-HSK50

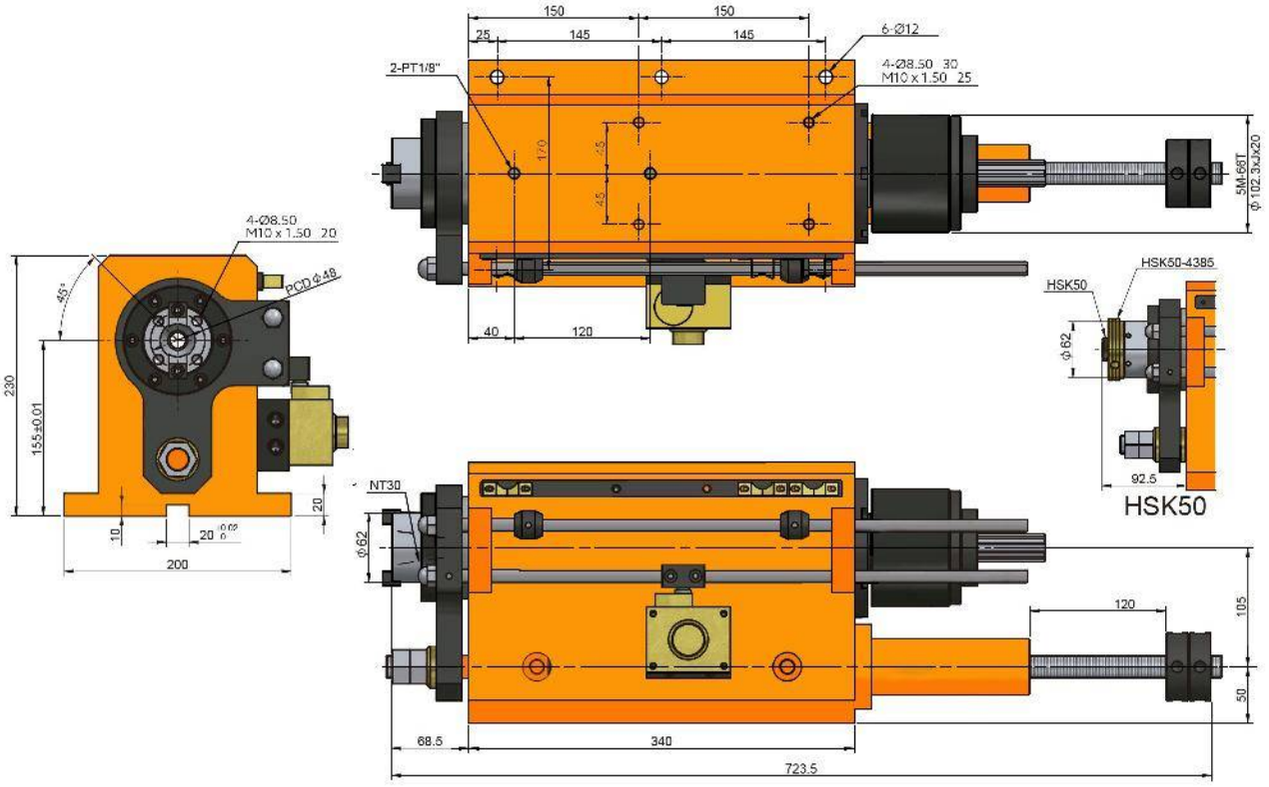

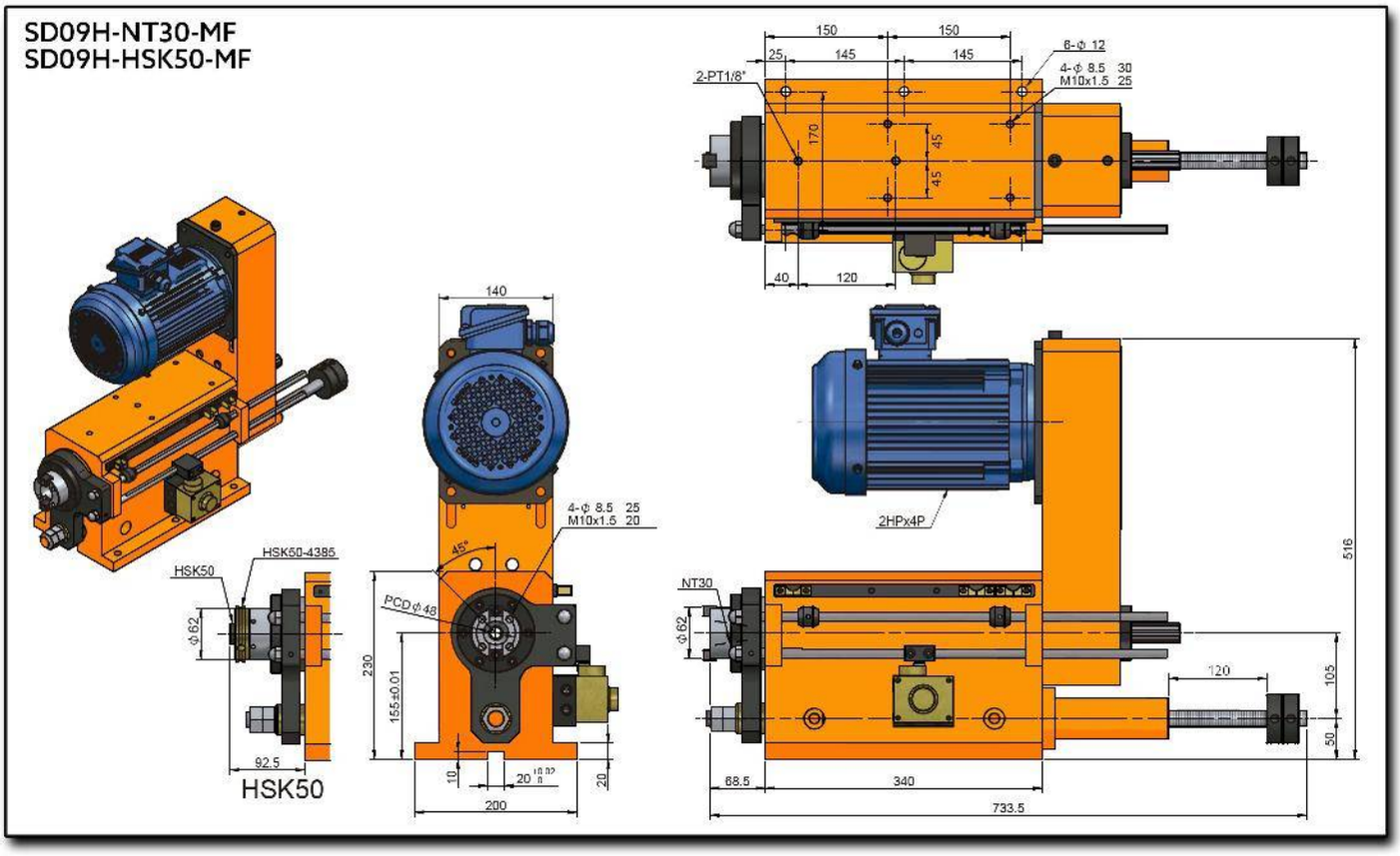
SD09H-NT30-MF
SD09H-HSK50-MF
150
150
25
145
145
6-Φ 12
4-Φ 8.5 30
M10x1.5 25
2-PT1/8"
170
45
45
40
120
140
4-Φ 8.5 25
M10x1.5 20
45°
PCD Φ48
230
155±0.01
10
20
200
HSK50
HSK50-4385
Φ62
92.5
HSK50
2HPx4P
NT30
Φ62
516
120
105
50
88.5
340
733.5

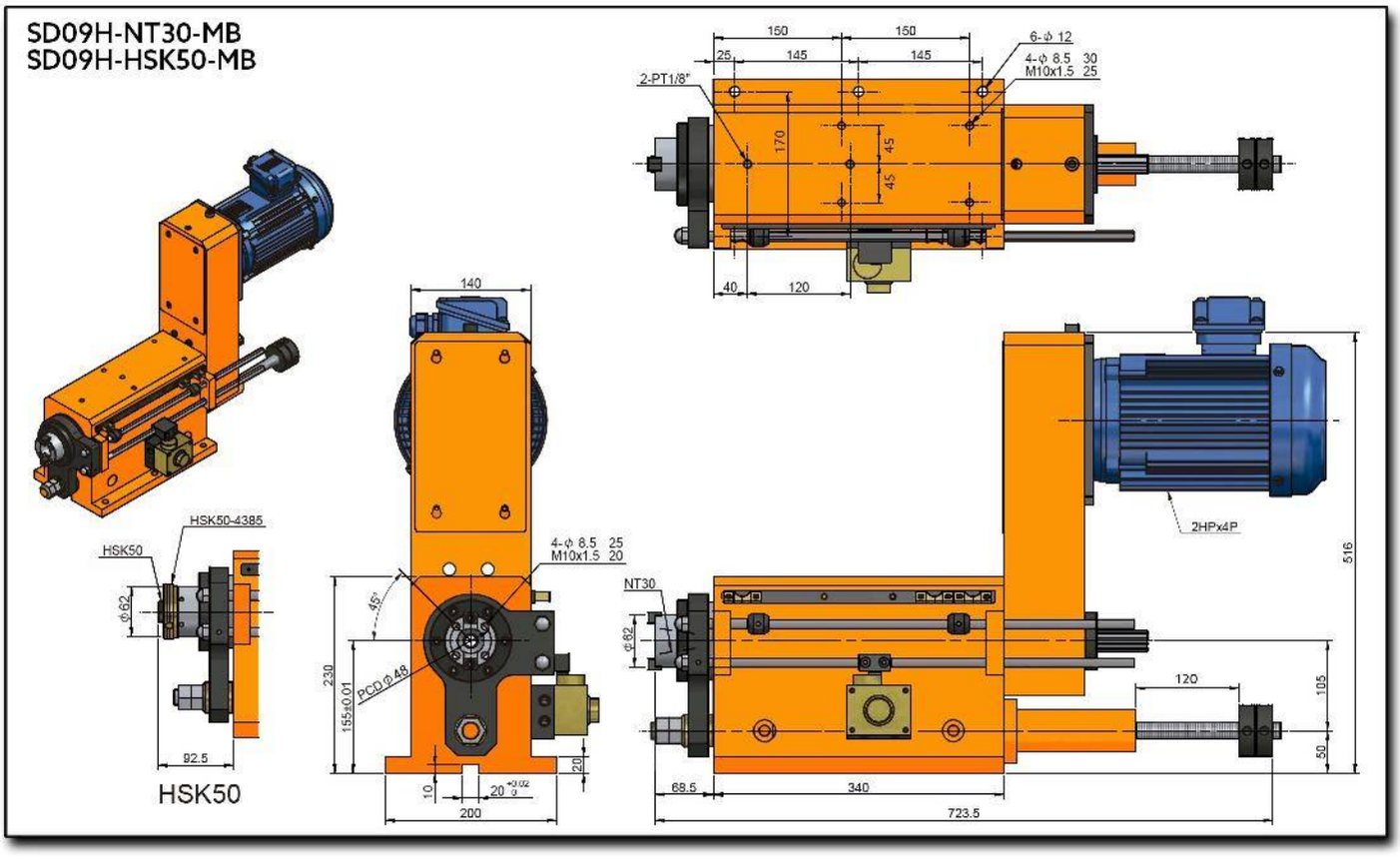
SD09H-NT30-MB
SD09H-HSK50-MB
150
150
25
145
145
6-ϕ 12
4-ϕ 8.5 30
M10x1.5 25
2-PT1/8"
170
45
45
40
120
140
HSK50-4385
HSK50
ϕ62
92.5
HSK50
4-ϕ 8.5 25
M10x1.5 20
45°
PCD ϕ48
230
155±0.01
10
20 +0.02 0
20
200
NT30
ϕ62
2HPx4P
516
120
105
50
68.5
340
723.5

SD12-150

Hydraulic Boring & Milling Spindle Head

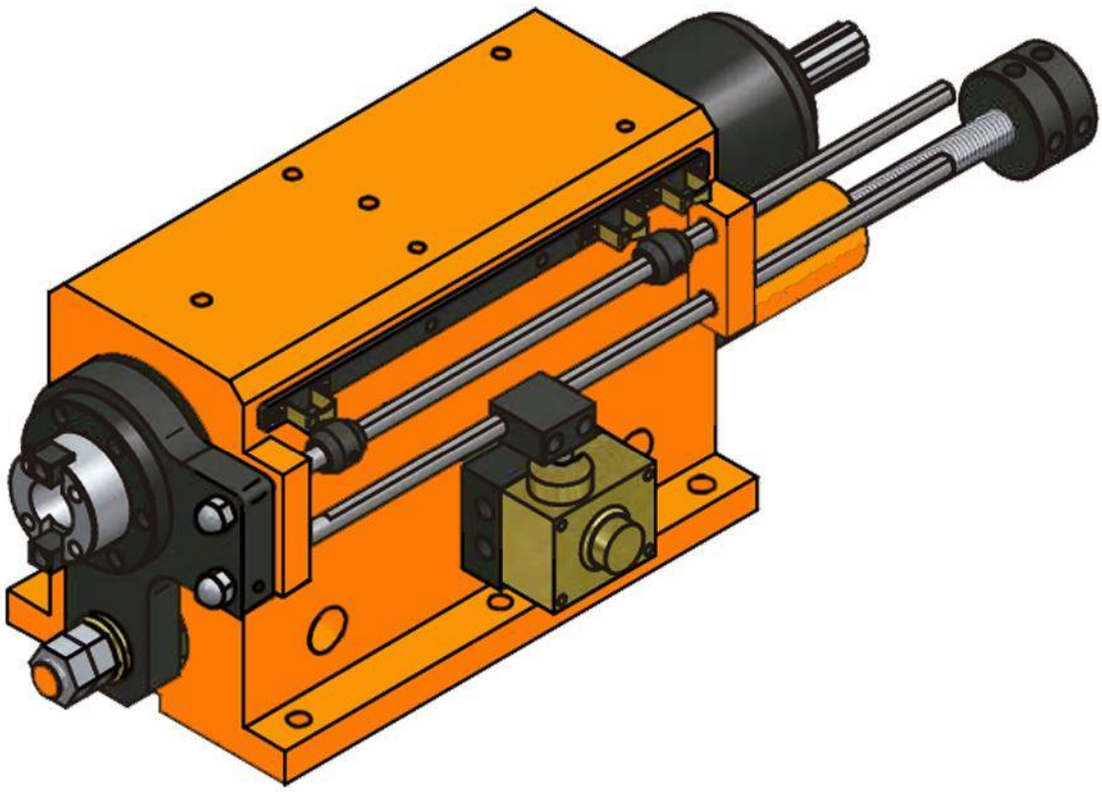

Characteristics & Dimensions

MODEL	SD12-150M
Drilling Capacity (S45C)	Ø35
Maximum Stroke	150.00
Maximum Speed (r.p.m.)	2,000.00
Maximum Power (3 Phases)	(H) 25.00 ~ 35.00 Kg/cm ^{2}
Spindle Pulley	21.20 cm ^{2} (Ø60 : Ø30)
Spindle Bearings	3 H.p. x 4P (220 Volts / 60 Hz)
Pulley Bearings	8M-54T / Ø133.60 x J x 25
Ball Screw Block Bearings	180.00 Kg
Ball Screw Block Seals	6011Z x 1 / 6009Z x 1 32011 x 1 / 32009 x 1
Front Cover Seal	6211ZZ x 2
Piston Seal	TC120-145-12x1
Ball Screw	TC75-90-12x1
Type Of Movement	Hydraulic

*** Roundness ≤ 0.003mm.
**** All dimensions are given in milimeters.

SD12-NT40
SD12-HSK63

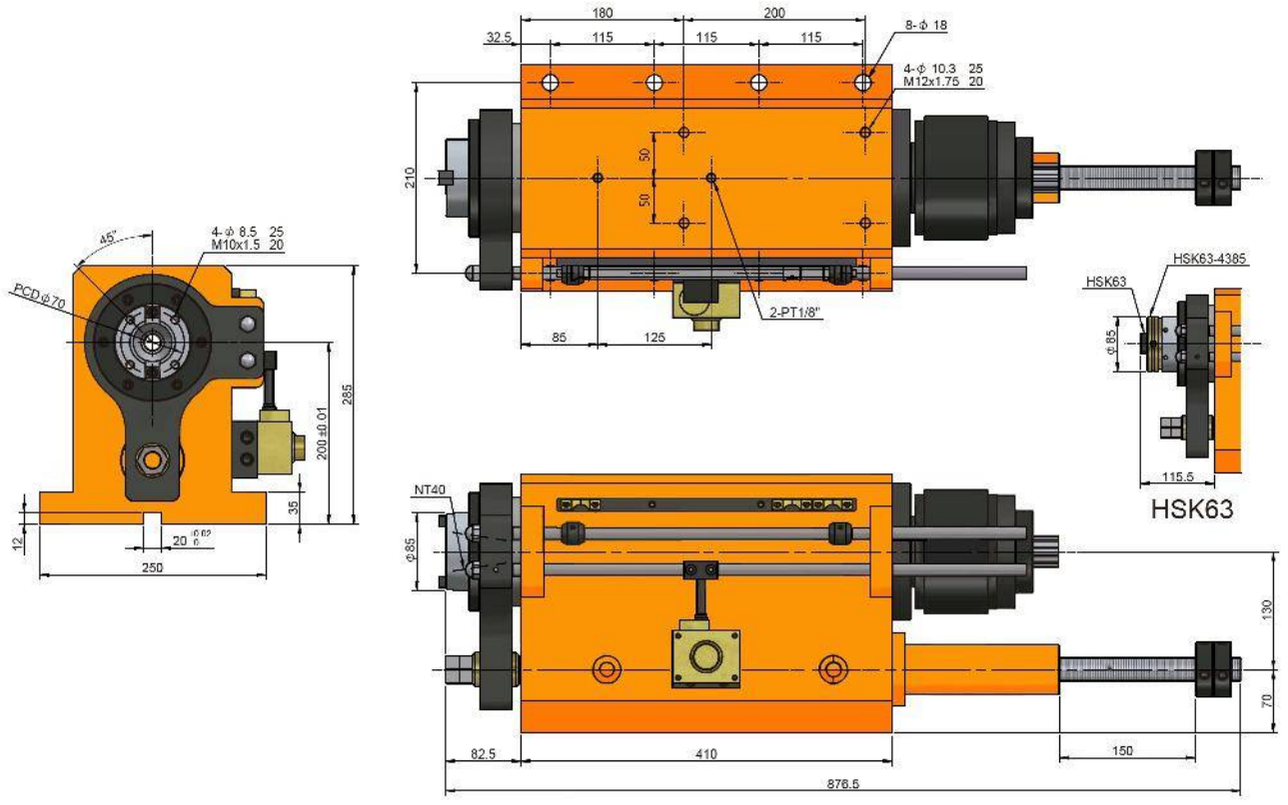

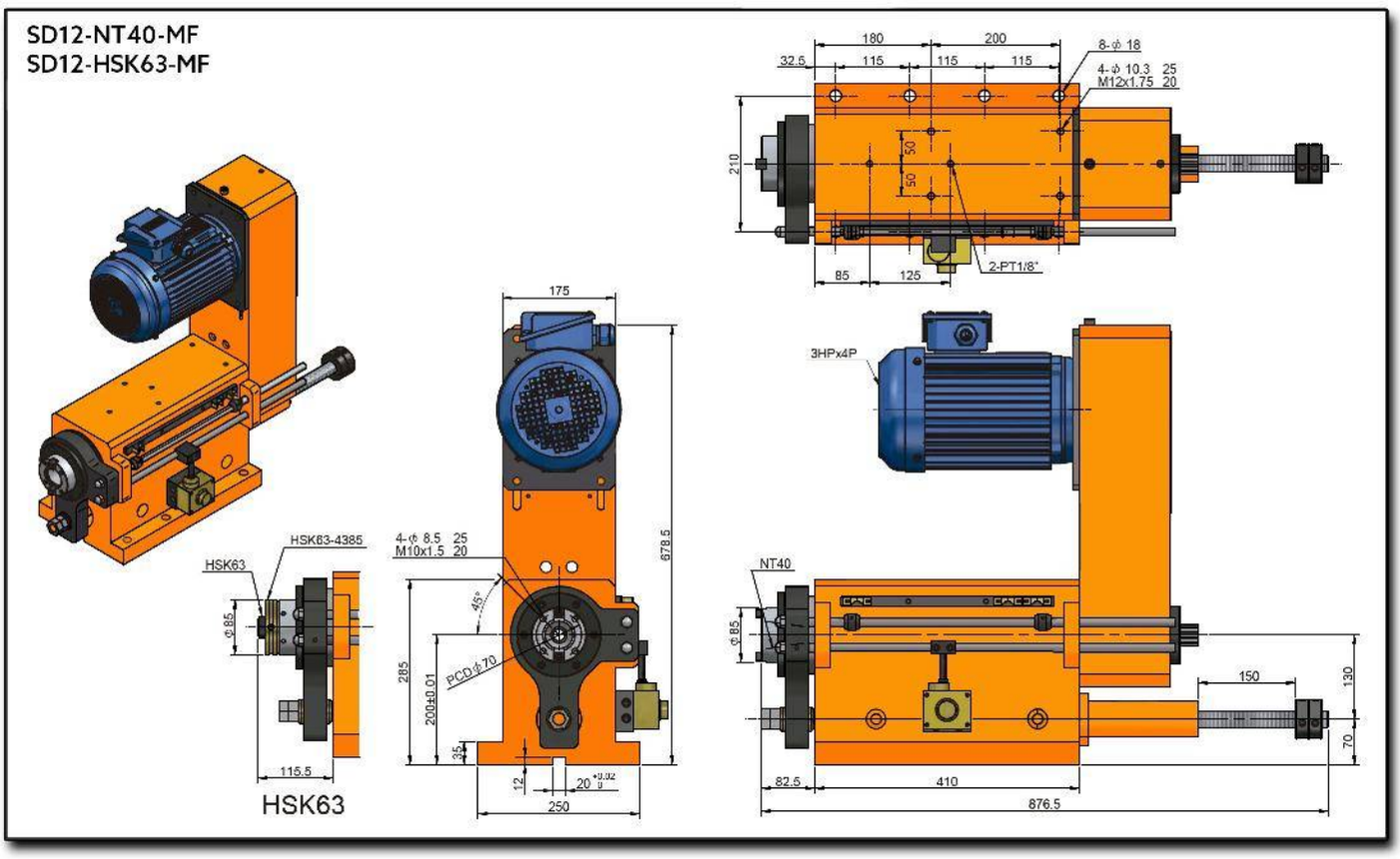
SD12-NT40-MF
SD12-HSK63-MF
180
200
32.5
115
115
115
8-φ 18
4-φ 10.3 25
M12x1.75 20
210
50
50
85
125
2-PT1/8"
3HPx4P
175
678.5
4-φ 8.5 25
M10x1.5 20
45°
285
200±0.01
PCDφ70
35
12
20 +0.02 0
250
HSK63
HSK63-4385
HSK63
φ85
115.5
NT40
φ85
150
130
70
82.5
410
876.5

SD12-NT40-MB
SD12-HSK63-MB

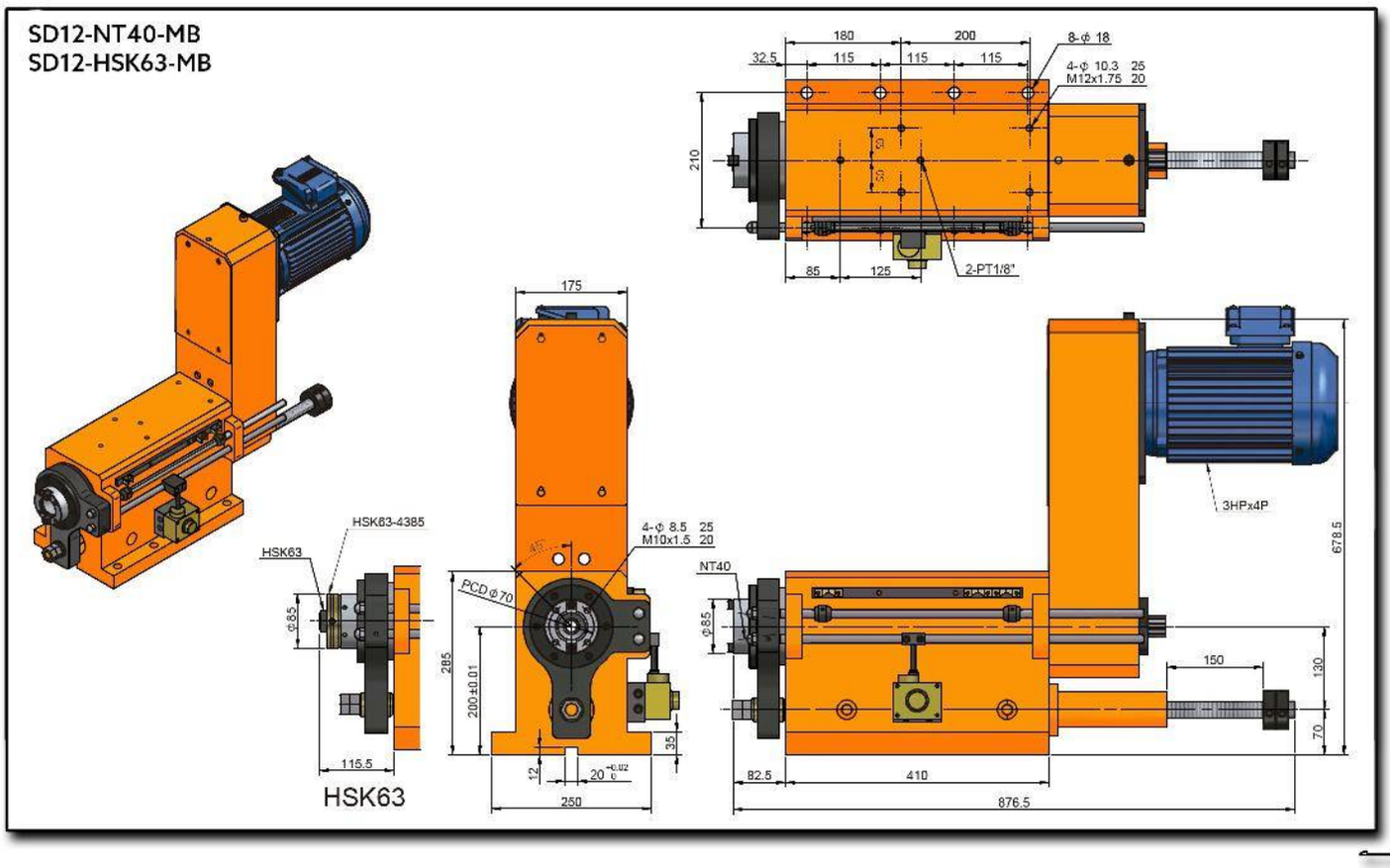

SD12H-150

Hi Performance Hydraulic Boring & Milling Spindle Head

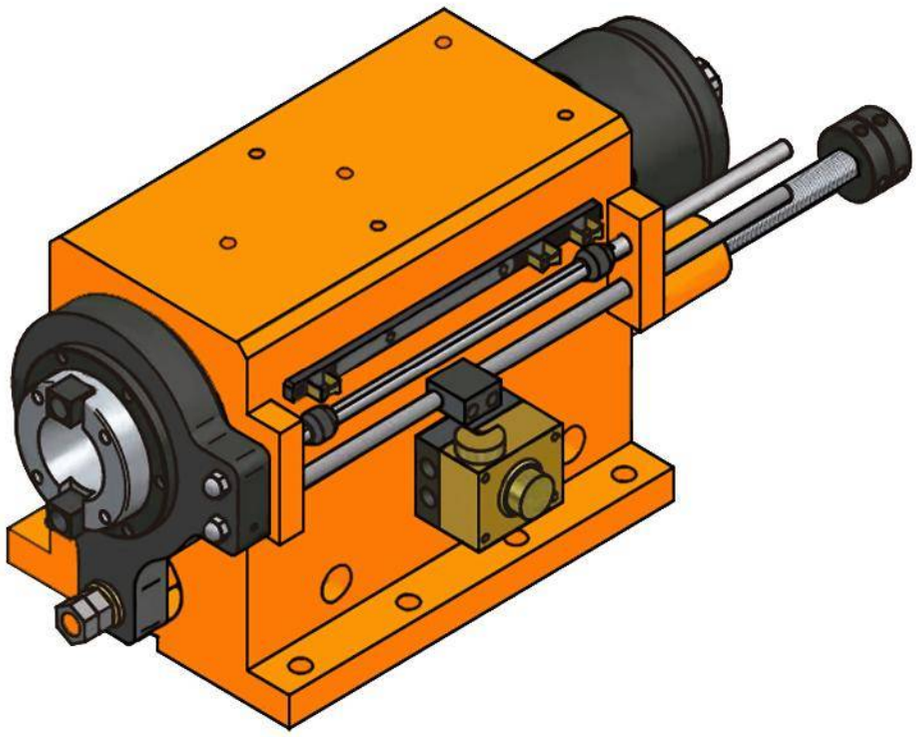

Characteristics & Dimensions

MODEL	SD12H-150M
Maximum Drilling Capacity (S45C)	Ø35
Maximum Spindle Stroke	150.00
Maximum Spindle Speed (r.p.m.)	6,000.00
Movement Pressure	(H) 25.00 ~ 35.00 Kg/cm ^{2}
Cylinder Diameter	21.20 cm ^{2} (Ø60 : Ø30)
Maximum Power (3 Phases)	3 H.p. x 4P (220 Volts / 60 Hz)
Transmission Belt	8M-54T / Ø133.60 x J x 25
Total Equipment Weight	180.00 Kg
Spindle Bearings	7011 x 2 7009 x 2
Spindle Pulley	6211ZZ x 2
Front Cover Seal	TC120-145-12x1
Piston Seal	TC75-90-12x1
Type Of Movement	Hydraulic

*** Roundness ≤ 0.003mm.
**** All dimensions are given in milimeters.

SD12H-NT40-MB
SD12H-HSK63-MB

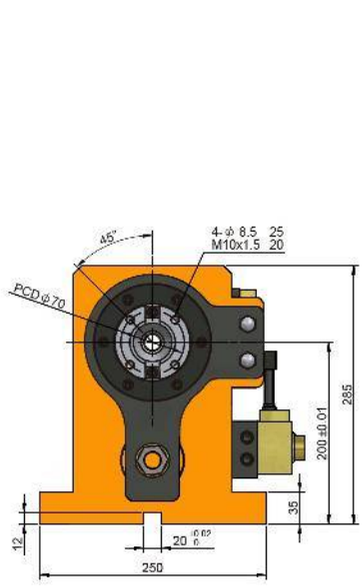

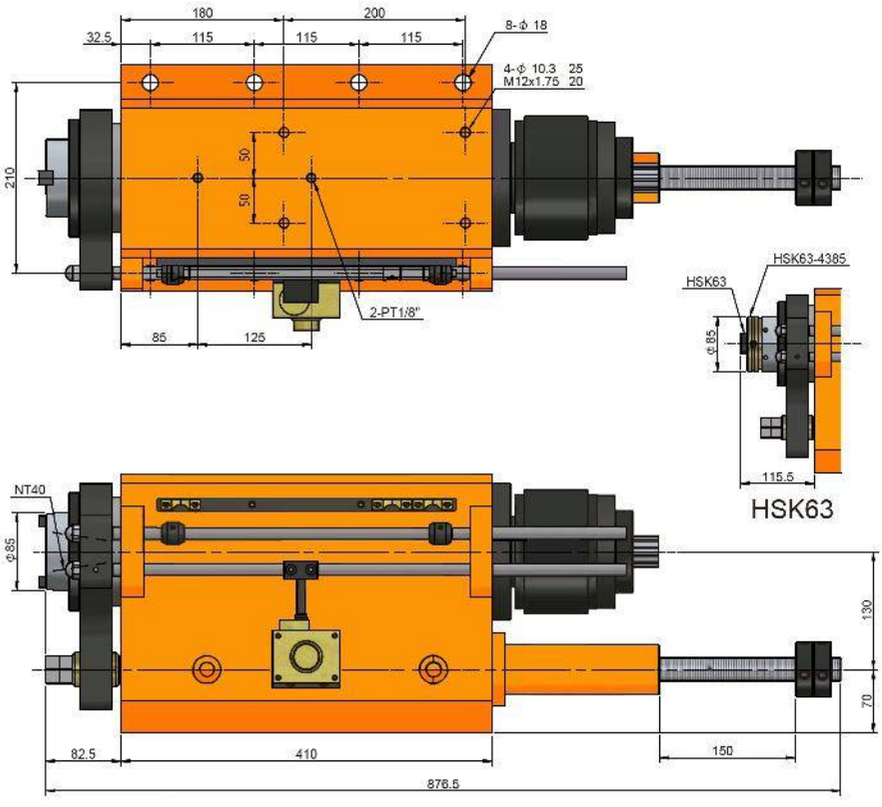

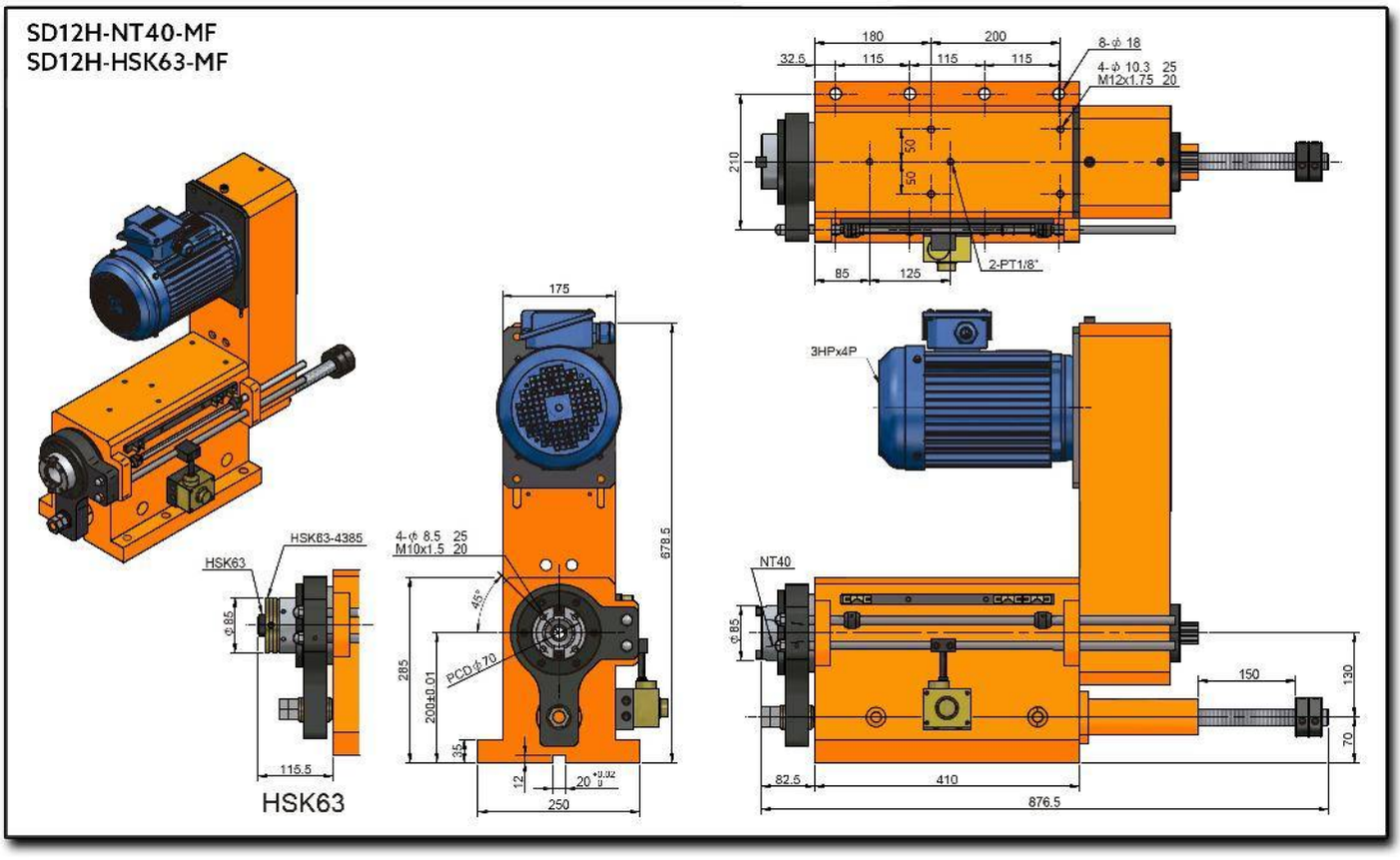
SD12H-NT40-MF
SD12H-HSK63-MF
180
200
32.5
115
115
115
8-φ 18
4-φ 10.3 25
M12x1.75 20
210
50
50
85
125
2-PT1/8"
3HPx4P
175
678.5
4-φ 8.5 25
M10x1.5 20
45°
PCD φ70
285
200±0.01
35
12
20 +0.02 0
250
HSK63
HSK63-4385
HSK63
φ85
115.5
NT40
φ85
150
130
70
82.5
410
876.5

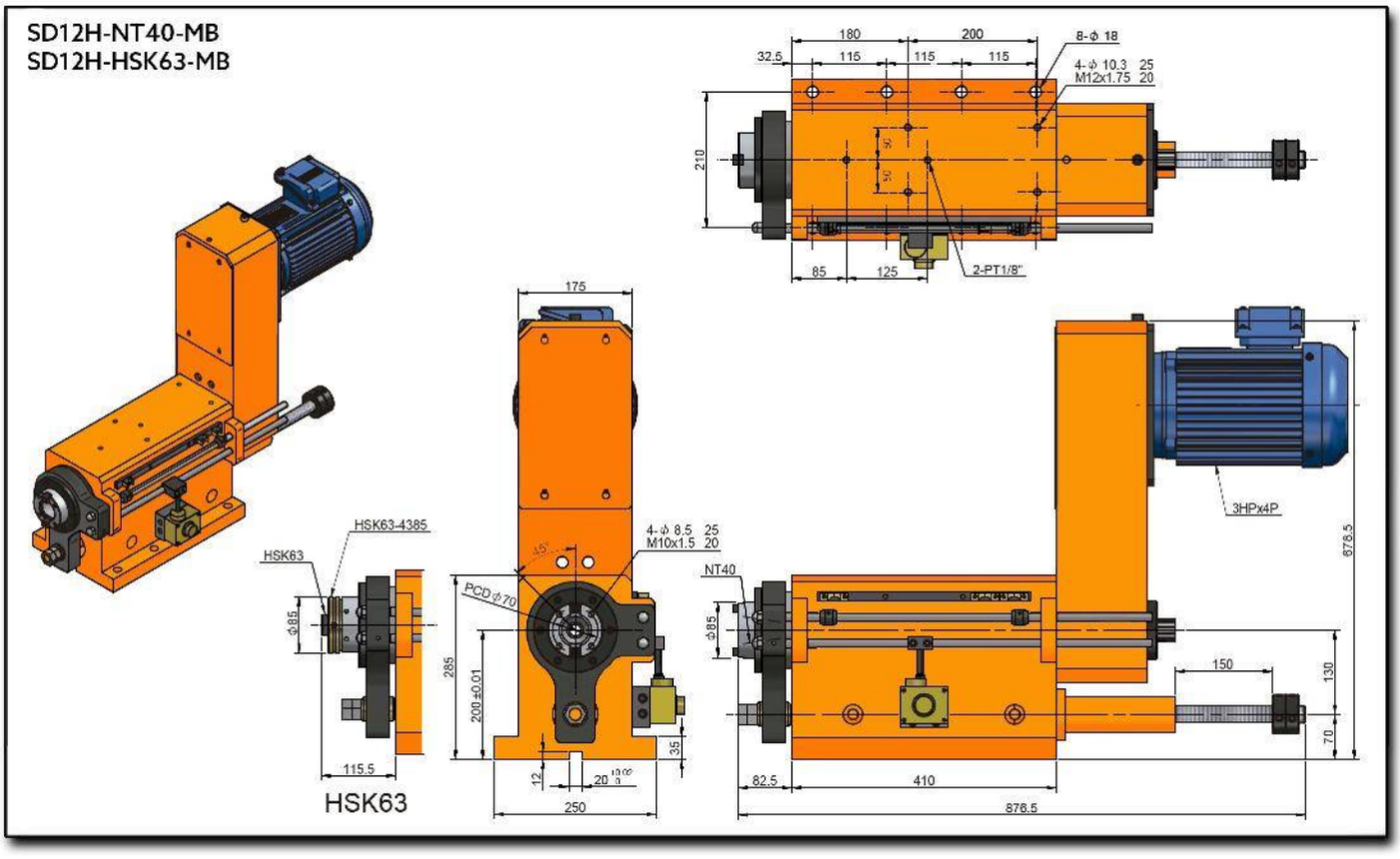
SD12H-NT40-MB
SD12H-HSK63-MB
180
200
32.5
115
115
115
8-Φ 18
4-Φ 10.3 25
M12x1.75 20
210
50
50
85
125
2-PT1/8"
175
4-Φ 8.5 25
M10x1.5 20
45°
PCD Φ70
HSK63
HSK63-4385
Φ85
285
200±0.01
35
12
20
250
115.5
HSK63
NT40
Φ85
3HPx4P
678.5
150
130
70
82.5
410
876.5

SD15-150

Hydraulic Boring & Milling Spindle Head

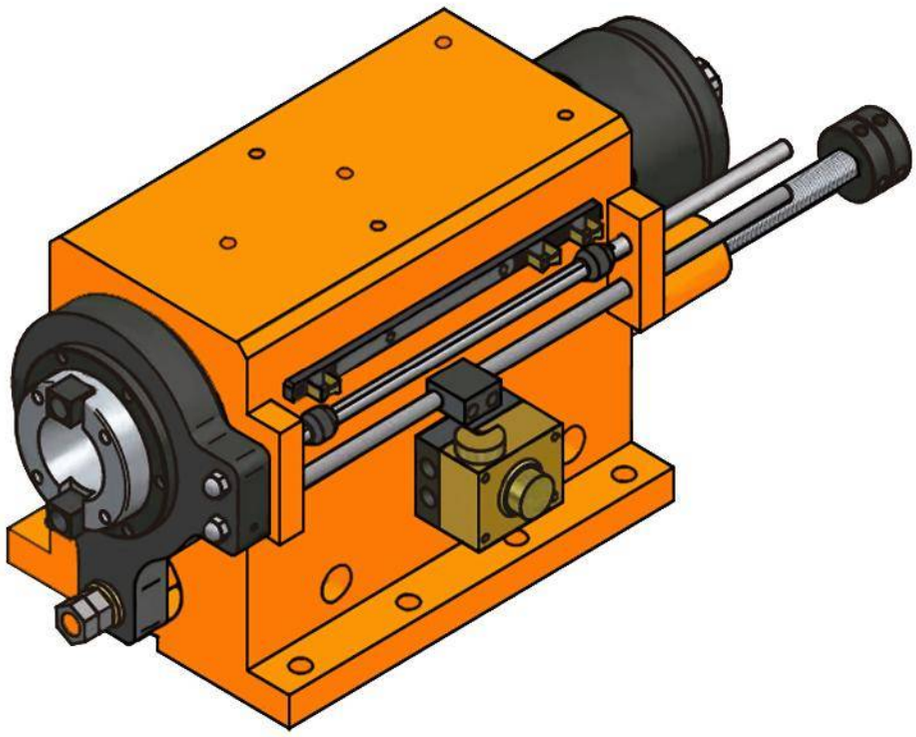

Characteristics & Dimensions

MODEL	SD15-150M
Maximum Drilling Capacity (S45C)	Ø50
Maximum Spindle Stroke	150.00
Maximum Spindle Speed (r.p.m.)	1,600.00
Movement Pressure	(H) 25.00 ~ 35.00 Kg/cm^2
Cylinder Diameter	21.20 cm^2 (Ø60 : Ø30)
Maximum Power (3 Phases)	5 H.p. x 4P (220 Volts / 60 Hz)
Transmission Belt	8M-62T / Ø156.50 x J x 25
Total Equipment Weight	240.00 Kg
Spindle Bearings	6014Z x 1 / 6012Z x 1 32014 x 1 / 32012 x 1
Spindle Pulley	6213ZZ x 2
Front Cover Seal	TC150-180-14 x 1
Piston Seal	TC90-110-12 x 1
Type Of Movement	Hydraulic

*** Roundness ≤ 0.003mm.
**** All dimensions are given in milimeters.

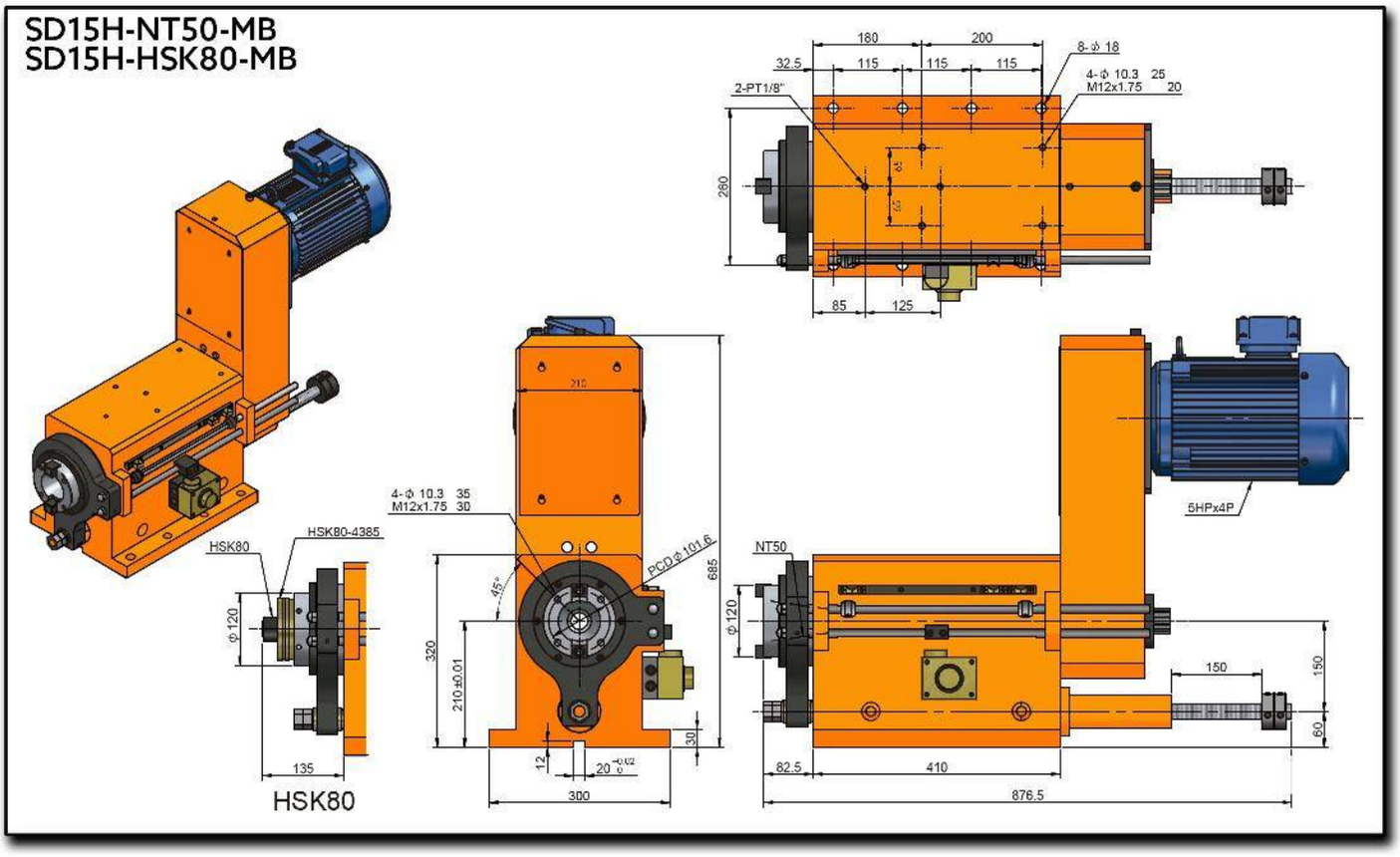
SD15H-NT50-MB
SD15H-HSK80-MB
180
200
32.5
115
115
115
8-Φ 18
4-Φ 10.3 25
M12x1.75 20
2-PT1/8"
260
85
125
4-Φ 10.3 35
M12x1.75 30
PCD Φ101.6
685
320
210±0.01
45°
30
12
300
HSK80
HSK80-4385
Φ120
135
HSK80
NT50
Φ120
5HPx4P
150
150
60
82.5
410
876.5

SD15-NT50
SD15-HSK80

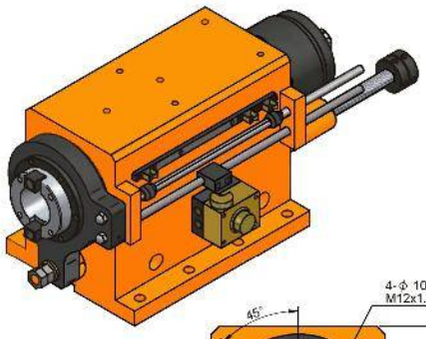

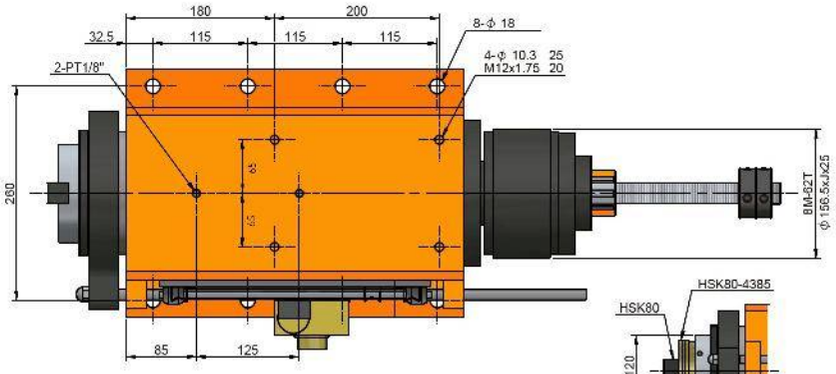

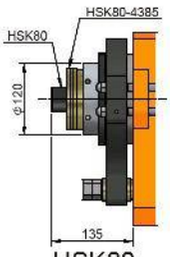

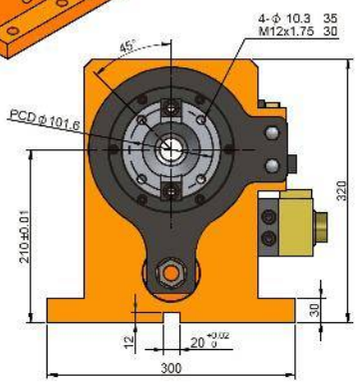

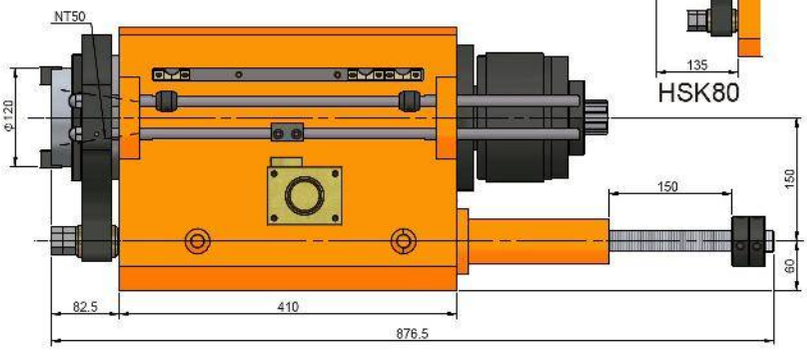

HSK80

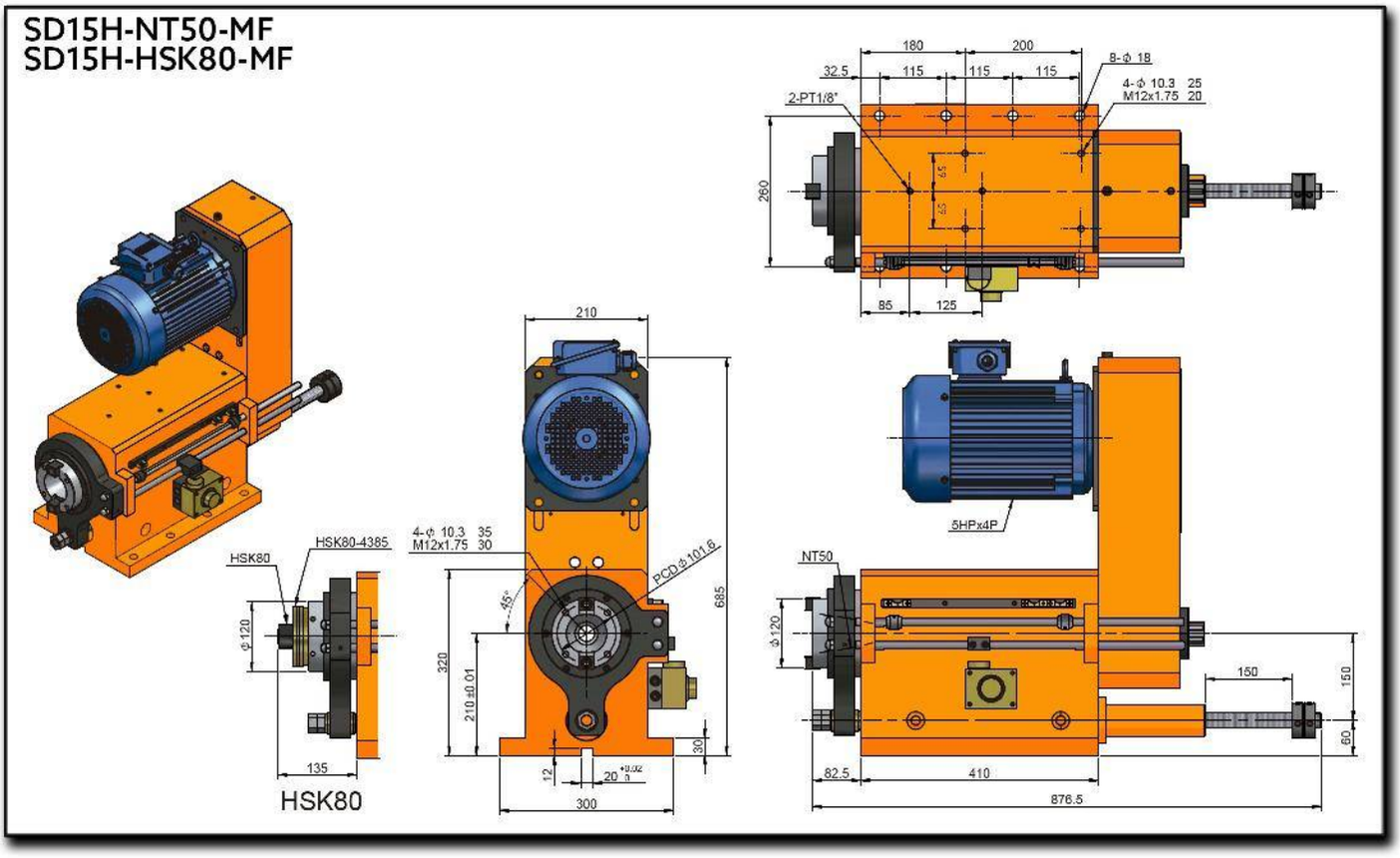
SD15H-NT50-MF
SD15H-HSK80-MF
180
200
32.5
115
115
115
8-ϕ 18
4-ϕ 10.3 25
M12x1.75 20
2-PT1/8"
260
85
125
210
5HPx4P
HSK80
HSK80-4385
4-ϕ 10.3 35
M12x1.75 30
PCD ϕ 101.6
45°
685
320
210±0.01
ϕ120
135
HSK80
12
20
30
300
NT50
150
150
60
82.5
410
876.5

SD15H-150

Hi Performance Hydraulic Boring & Milling Spindle Head

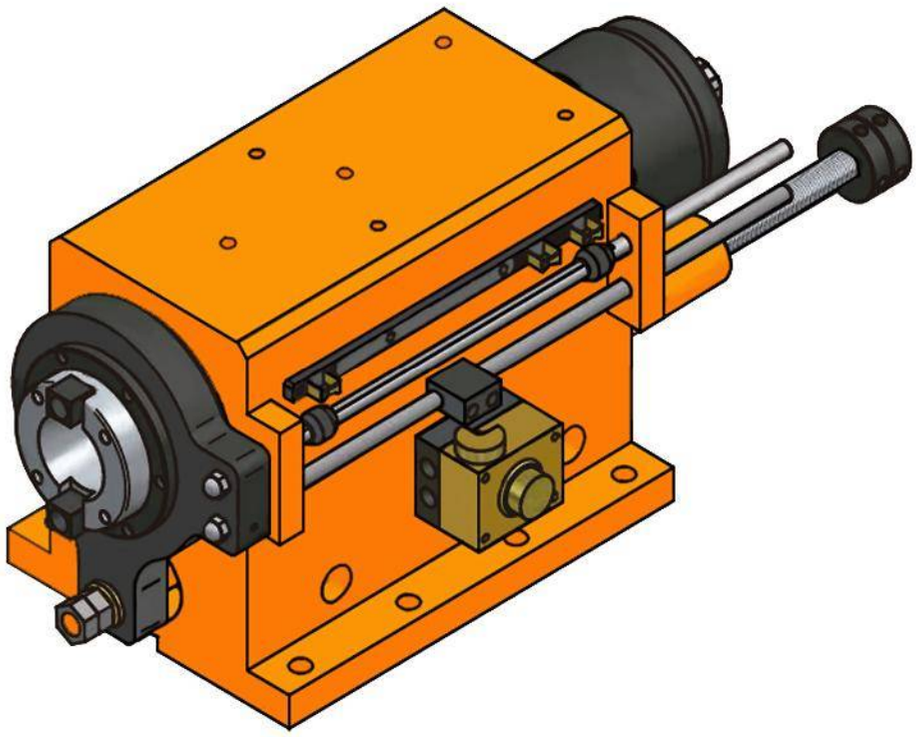

Characteristics & Dimensions

MODEL	SD15H-150M
Maximum Drilling Capacity (S45C)	*Ø50*
Maximum Spindle Stroke	*150.00*
Maximum Spindle Speed (r.p.m.)	*4,000.00*
Movement Pressure	*(H) 25.00 ~ 35.00 Kg/cm²*
Cylinder Diameter	*21.20 cm² (Ø60 : Ø30)*
Maximum Power (3 Phases)	*5 H.p. x 4P (220 Volts / 60 Hz)*
Transmission Belt	*8M-62T / Ø156.50 x J x 25*
Total Equipment Weight	*240.00 Kg*
Spindle Bearings	*7014 x 2* *7012 x 2*
Spindle Pulley	*6213ZZ x 2*
Front Cover Seal	*TC150-180-14 x 1*
Piston Seal	*TC90-110-12 x 1*
Type Of Movement	*Hydraulic*

**** Roundness ≤ 0.003mm.*
***** All dimensions are given in milimeters.*

SD15H-NT50
SD15H-HSK80

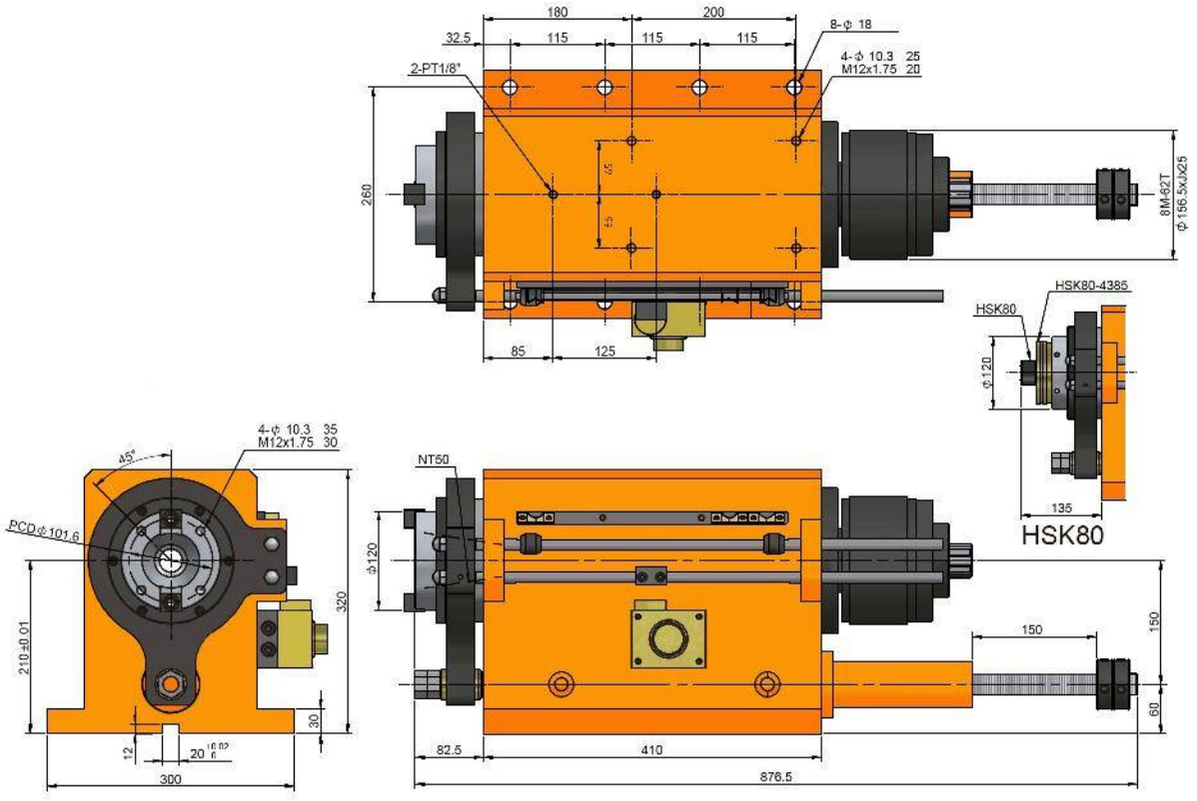

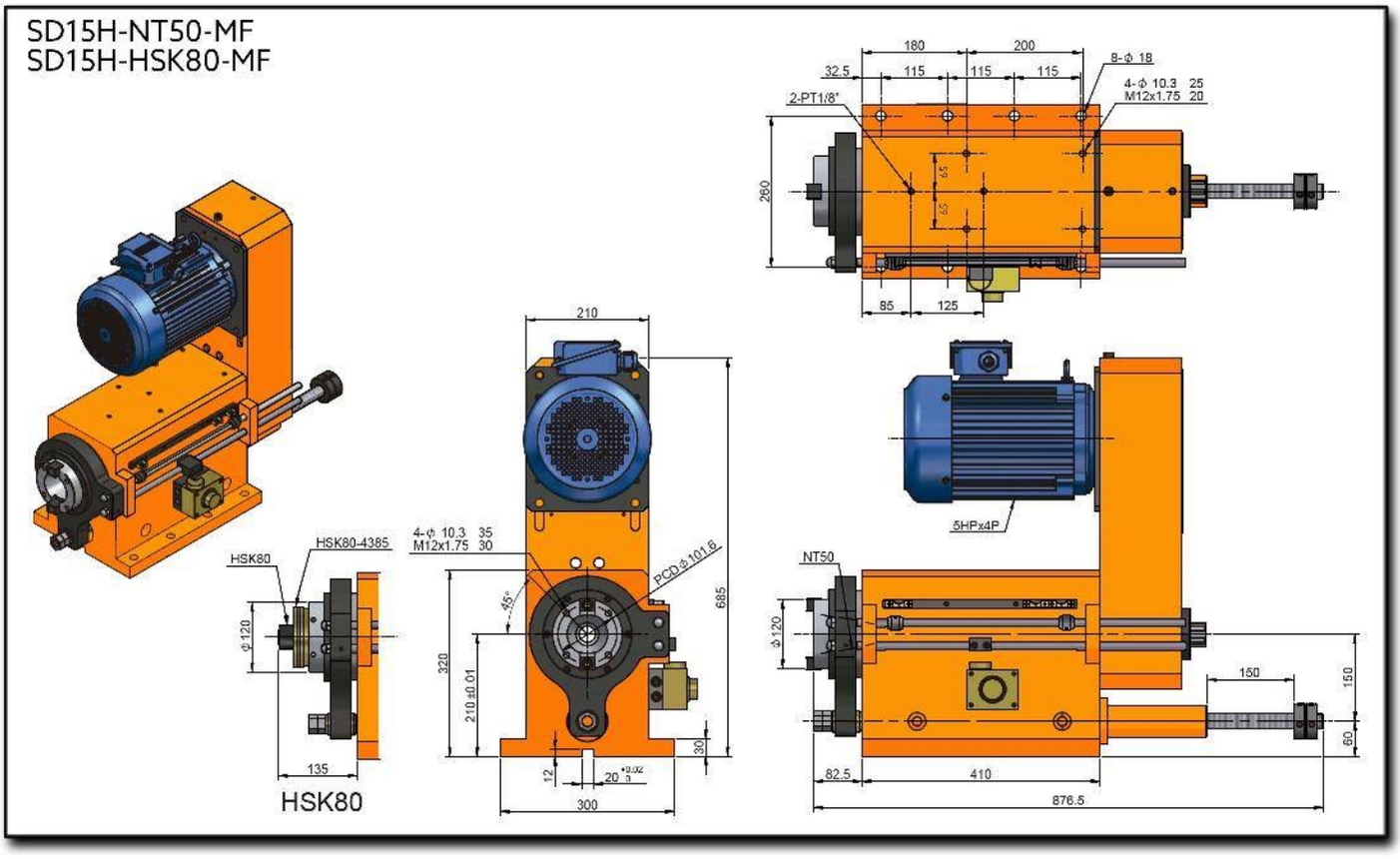
SD15H-NT50-MF
SD15H-HSK80-MF
180
200
32.5
115
115
115
8-ϕ 18
4-ϕ 10.3 25
M12x1.75 20
2-PT1/8"
260
85
125
210
5HPx4P
HSK80
HSK80-4385
4-ϕ 10.3 35
M12x1.75 30
PCD ϕ 101.6
45°
685
320
210±0.01
ϕ120
135
HSK80
12
20
30
300
NT50
ϕ120
150
150
60
82.5
410
876.5

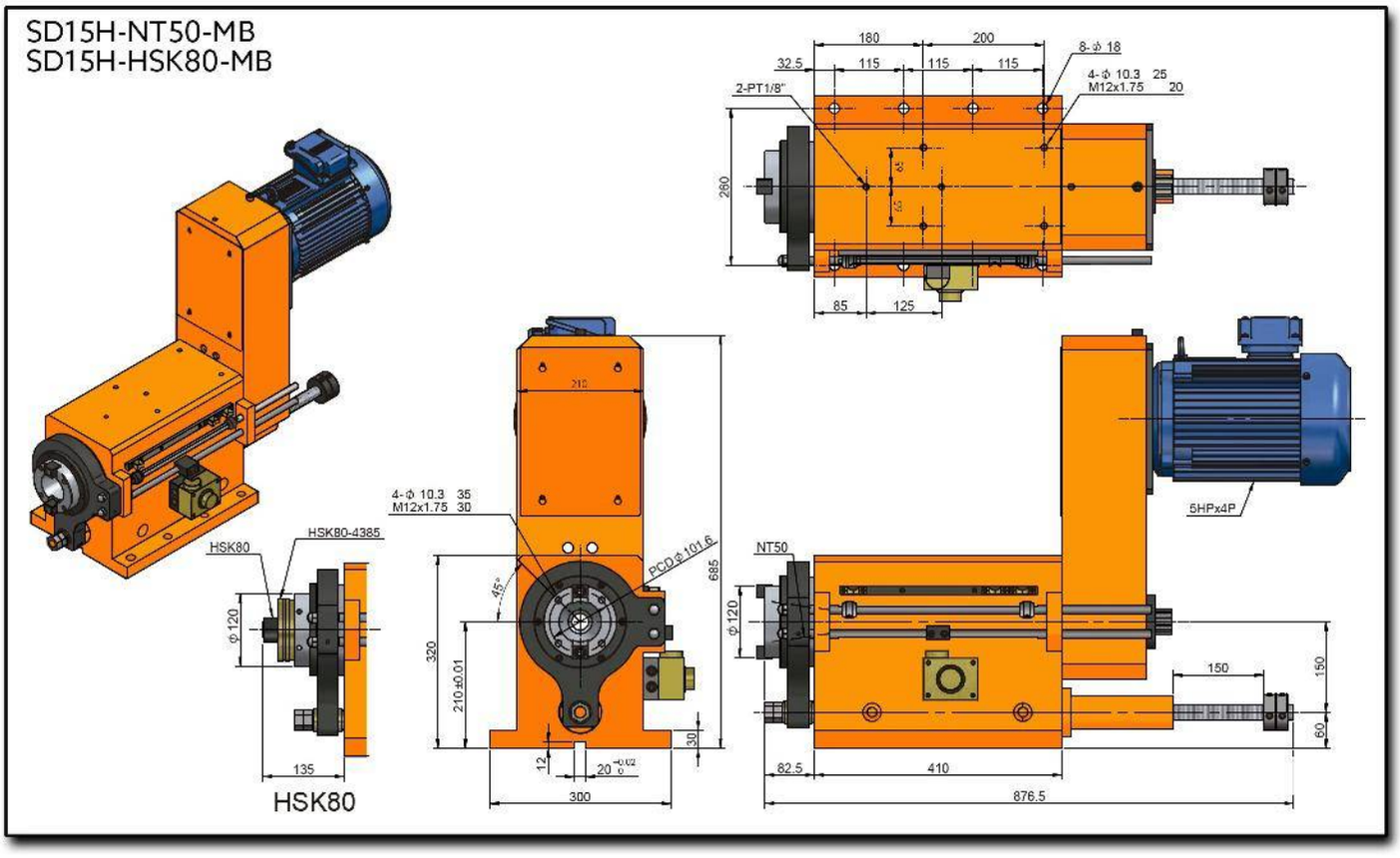
SD15H-NT50-MB
SD15H-HSK80-MB
180
200
32.5
115
115
115
8-Φ 18
4-Φ 10.3 25
M12x1.75 20
2-PT1/8"
260
85
125
4-Φ 10.3 35
M12x1.75 30
PCD Φ101.6
685
320
210±0.01
45°
30
12
300
HSK80
HSK80-4385
Φ120
135
HSK80
NT50
Φ120
5HPx4P
150
150
60
82.5
410
876.5

SFHD SERIES

DRILLING HYDRAULIC COMPACT SPINDLES FLANGE TYPE

SFHD06-100

Hydraulic Drilling Spindle Head Flange Type

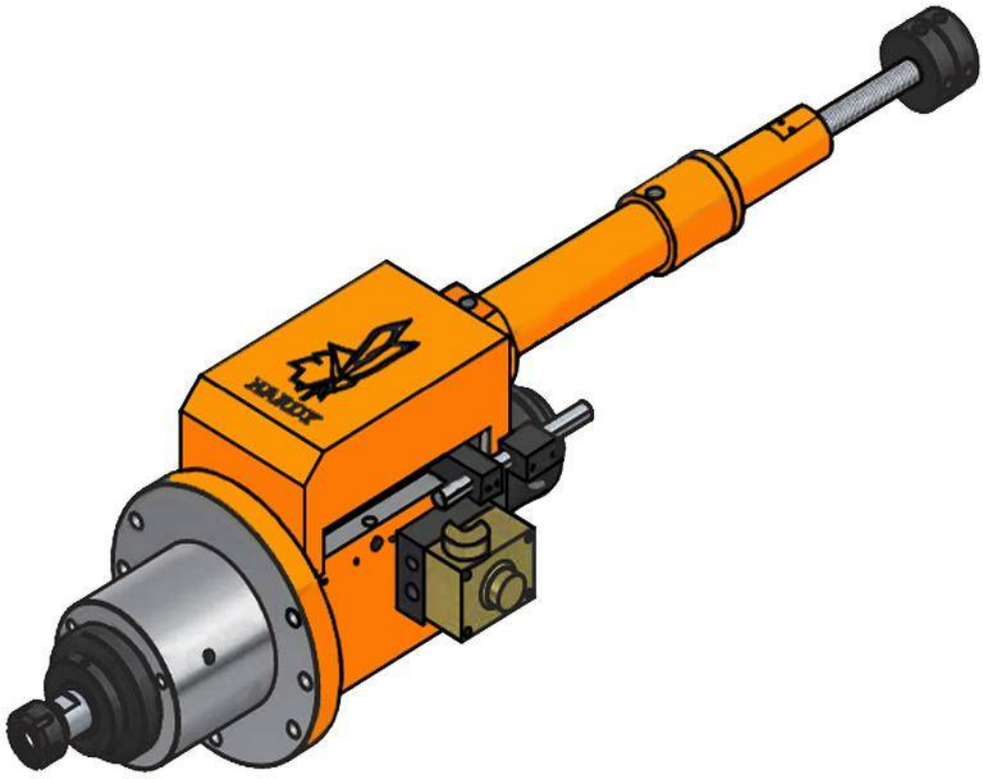

Characteristics & Dimensions

Model	SFHD06-100
Maximum Drilling Capacity (S45C)	*Ø16*
Maximum Spindle Stroke	*100.00*
Maximum Spindle Speed (r.p.m.)	*3,500.00*
Maximum Power (3 Phases)	*1 H.p., 220 Volts / 60 Hz.*
Spindle Pulley	*5M-50T / Ø78.50 x J x 15*
Spindle Bearings	*6006Z X 1 / 6005Z X 1* *32006 x 1 / 32005 x 1*
Pulley Bearings	*6908ZZ x 2*
Front Cover Seals	*TC70-90-12 x 1*
Spindle Seals	*TC45-60-7 x 1*
Piston O-Ring	*P70 x 2*
Front Cover O-Ring	*G70 x 1 / G40 (G48-HSK40) x 1*
Propel Pressure	*(H) 30.00 ~ 40.00 Kg/cm2*
Cylinder Diameter	*7.70 cm^2 / Ø25.00*

*** Roundness ≤ 0.003mm*
**** All dimensions are given in millimeters.*

SFHD06-100-ER25
SFHD06-100-JT6

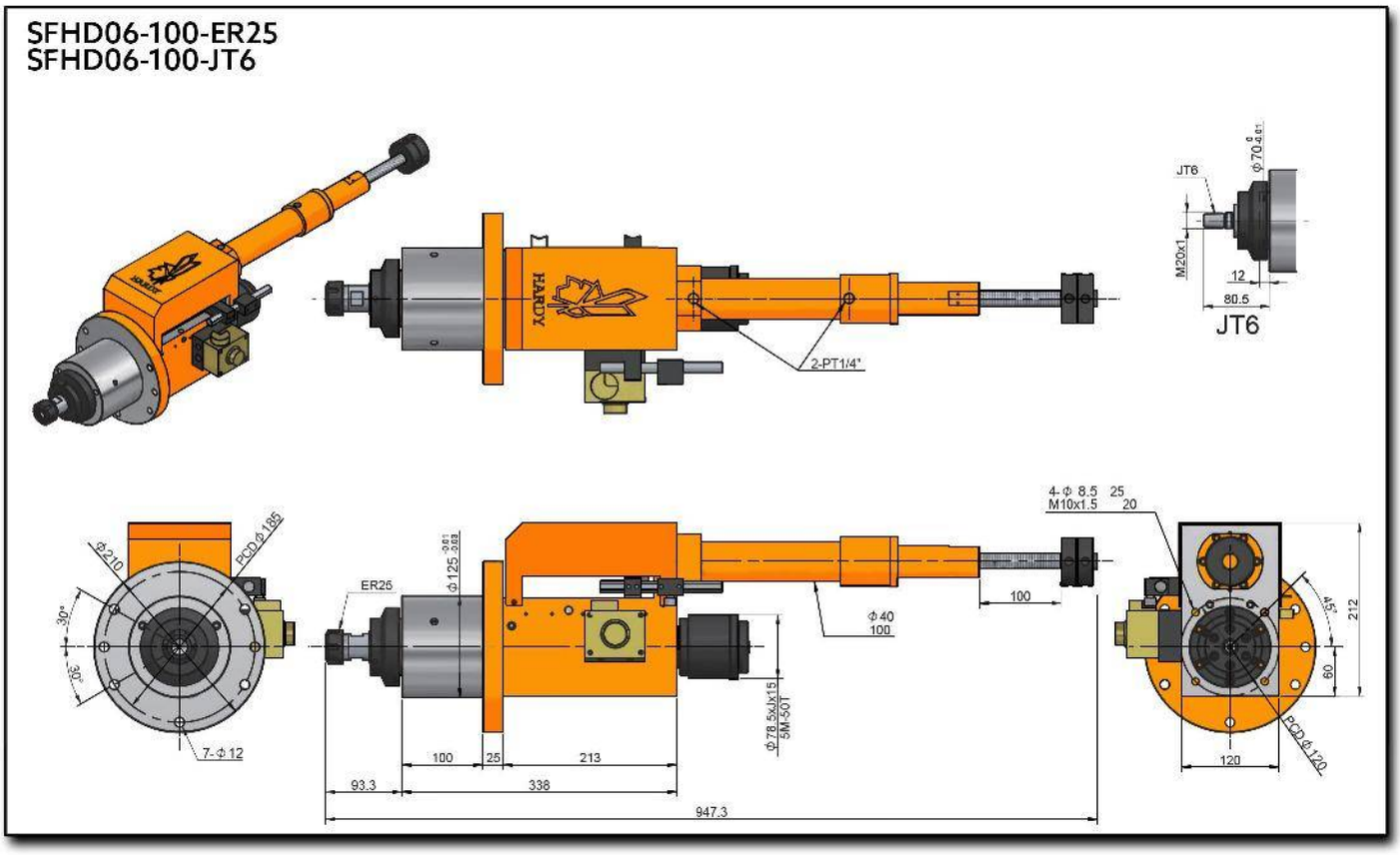

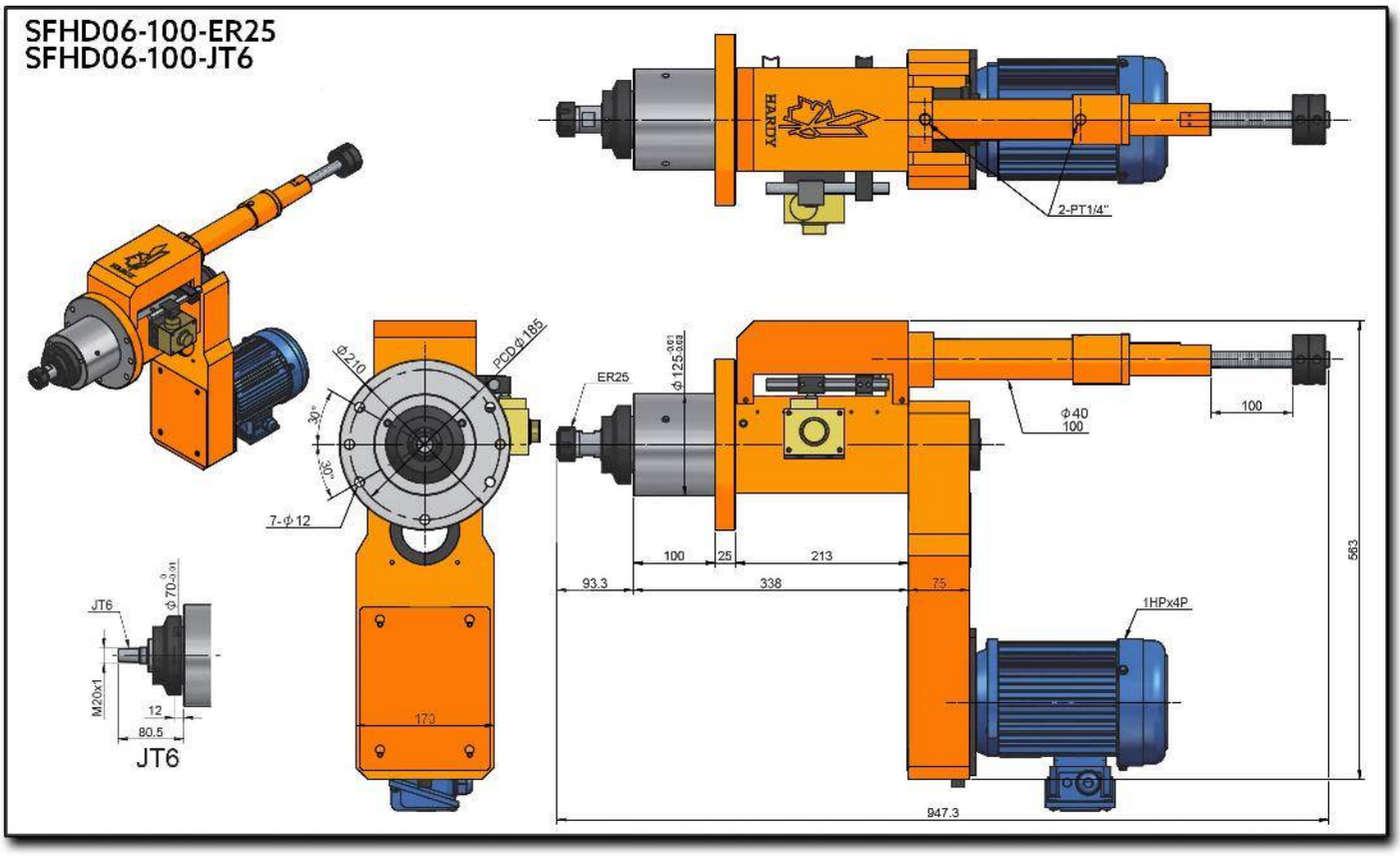
SFHD06-100-ER25
SFHD06-100-JT6
HARDY
2-PT1/4"
Φ210
PCDΦ185
30°
30°
7-Φ12
ER25
Φ125
Φ40
100
100
25
213
93.3
338
75
583
1HPx4P
947.3
JT6
Φ70
M20x1
12
80.5
JT6
173

SFHD06H-100

High Performance Hydraulic Drilling Spindle Head Flange Type

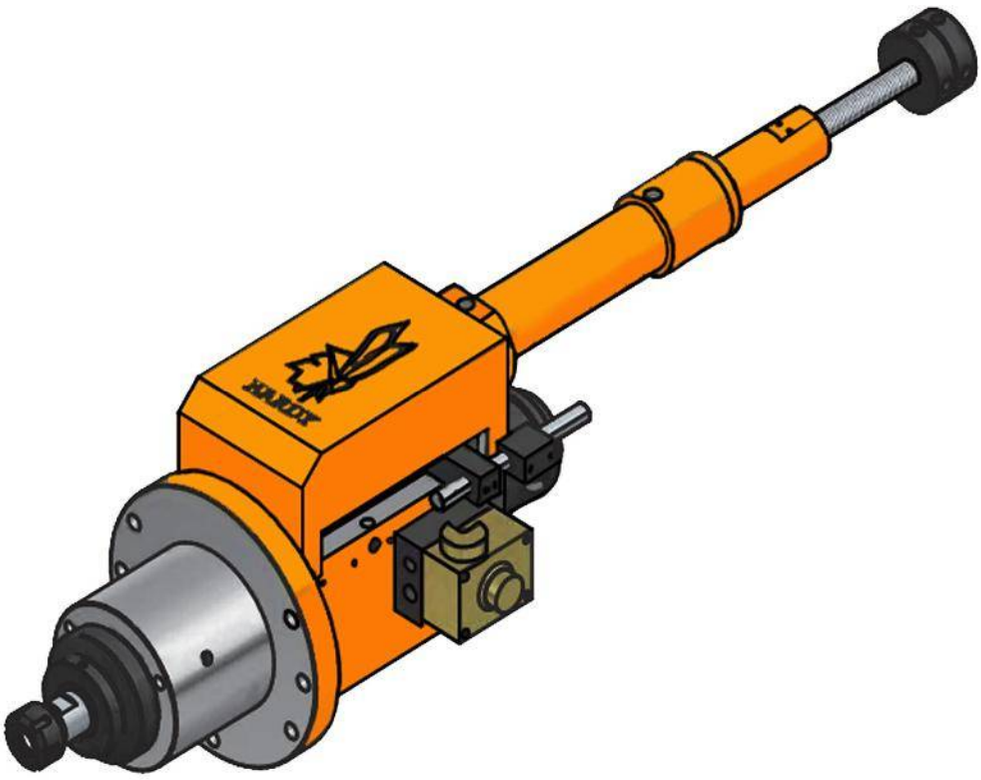

Characteristics & Dimensions

Model	SFHD06H-100
Maximum Drilling Capacity (S45C)	*Ø16*
Maximum Spindle Stroke	*100.00*
Maximum Spindle Speed (r.p.m.)	*10,000.00*
Maximum Power (3 Phases)	*1 H.p., 220 Volts / 60 Hz.*
Spindle Pulley	*5M-50T / Ø78.50 x J x 15*
Spindle Bearings	*7006 x 2* *7005 x 2*
Pulley Bearings	*6908ZZ x 2*
Front Cover Seals	*TC70-90-12 x 1*
Spindle Seals	*TC45-60-7 x 1*
Piston O-Ring	*P70 x 2*
Front Cover O-Ring	*G70 x 1 / G40 (G48-HSK40) x 1*
Propel Pressure	*(H) 30.00 ~ 40.00 Kg/cm2*
Cylinder Diameter	*7.70 cm^2 / Ø25.00*

*** Roundness ≤ 0.003mm*
**** All dimensions are given in millimeters.*

SFHD06H-100-ER25
SFHD06H-100-JT6

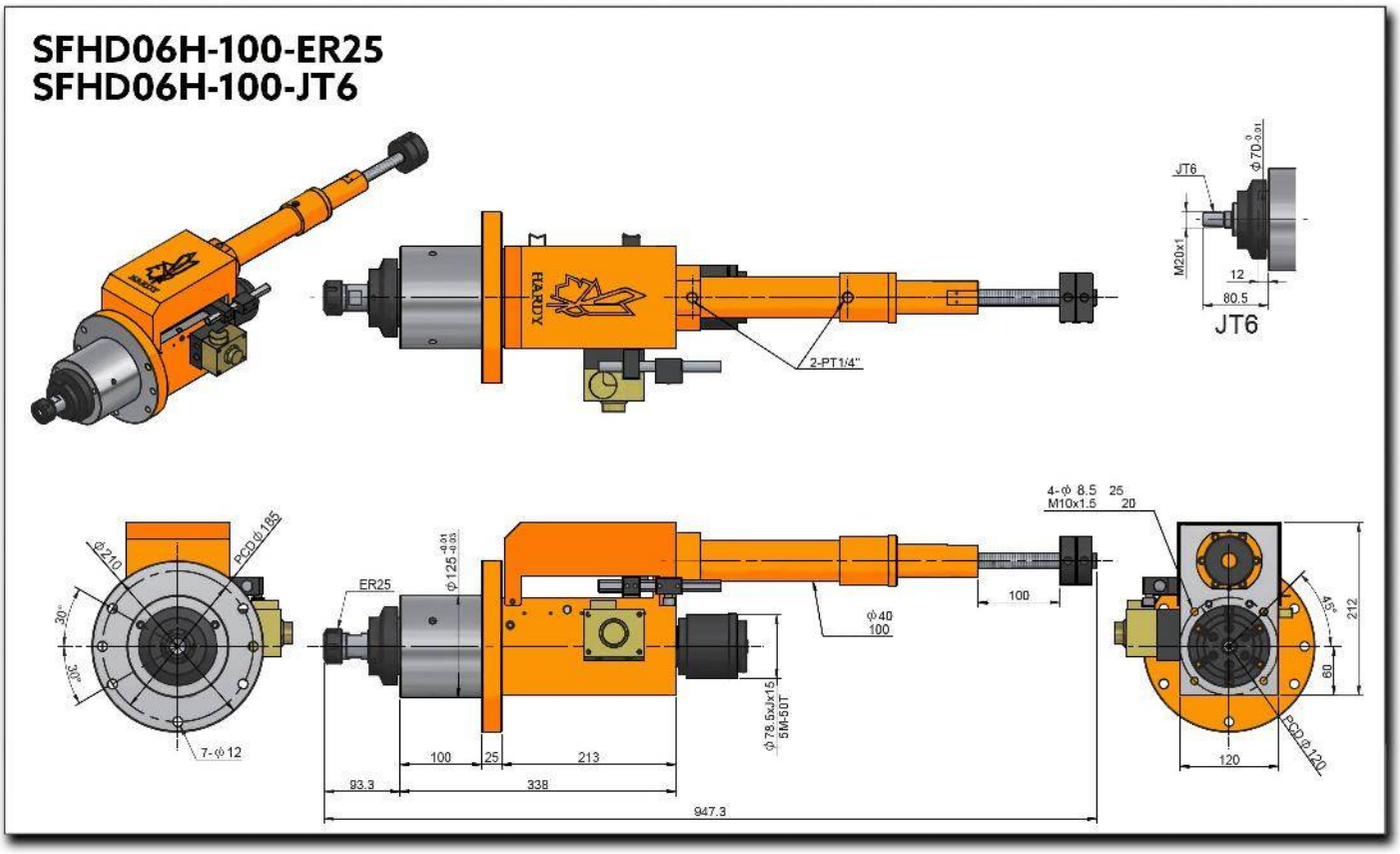

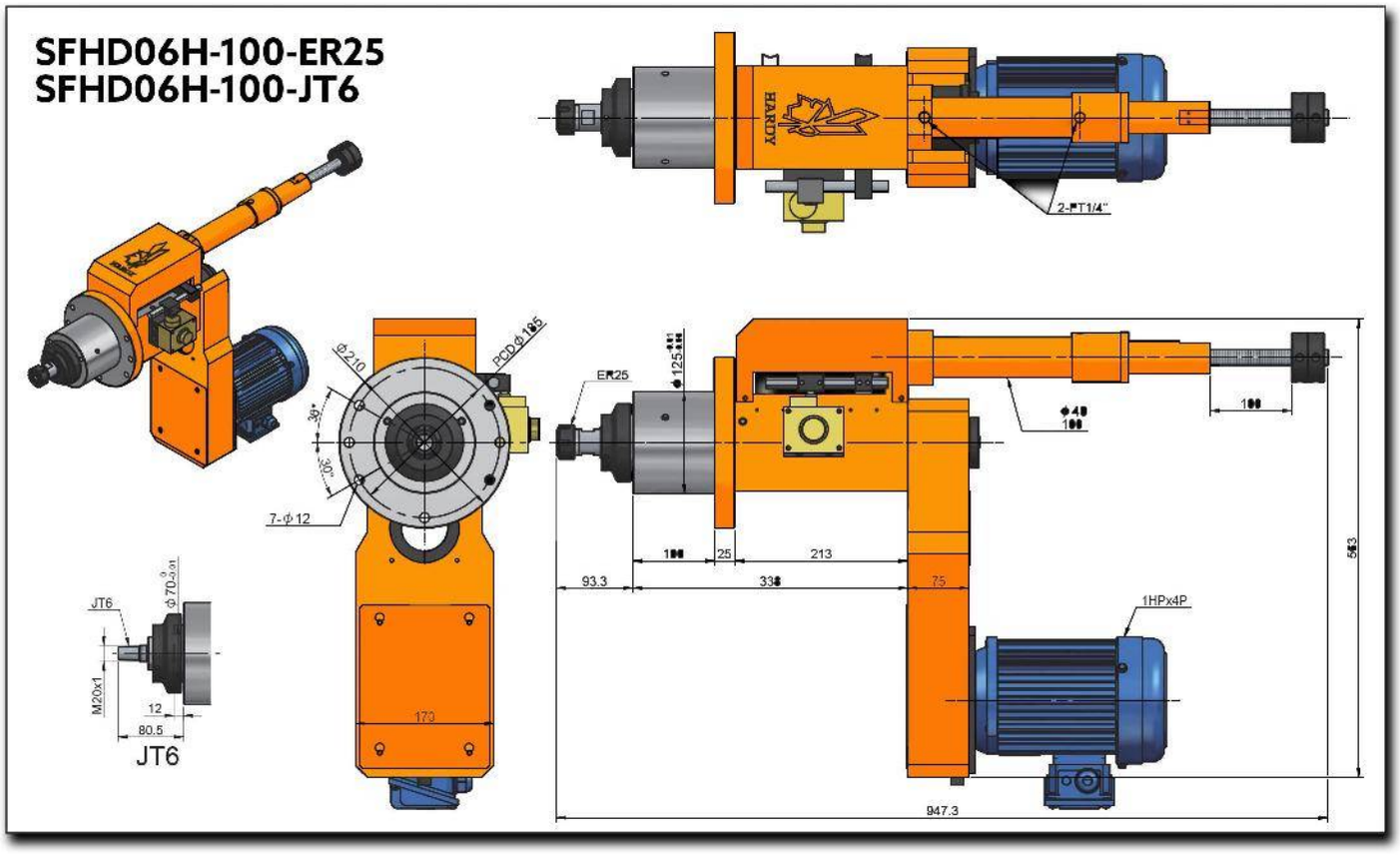
SFHD06H-100-ER25
SFHD06H-100-JT6
HARDY
2-PT1/4"
ER25
Ø210
PCD Ø195
30°
30°
7-Ø12
JT6
M20x1
12
80.5
JT6
170
25
213
93.3
75
1HPx4P
947.3

SFHD09-120

Hydraulic Drilling Spindle Head Flange Type

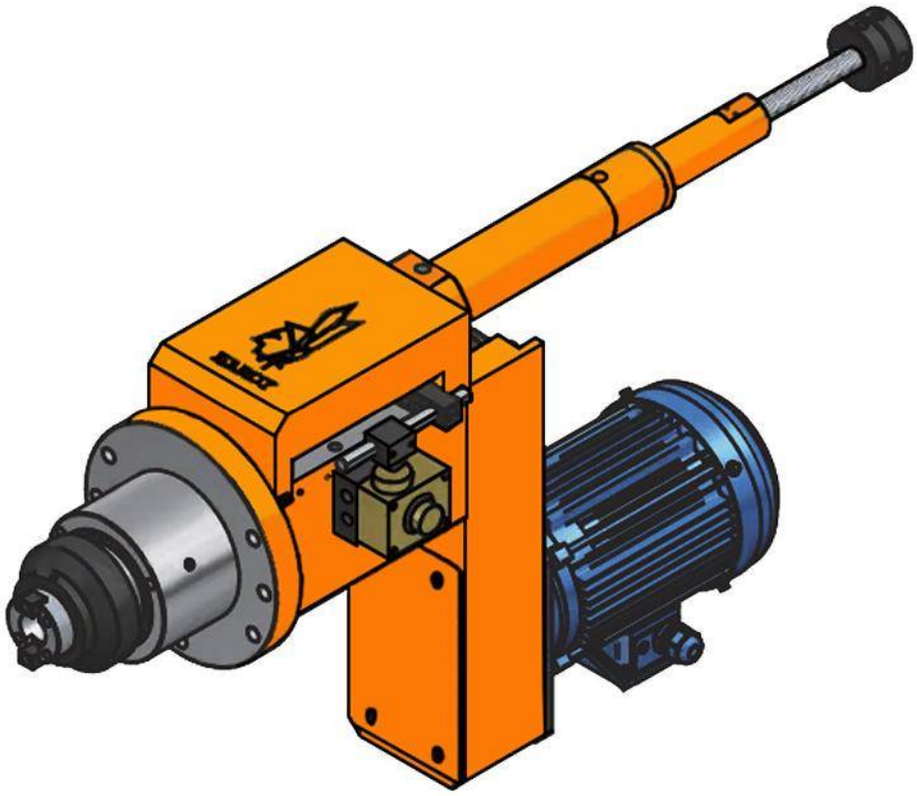

Characteristics & Dimensions

Model	SFHD09-120
Maximum Drilling Capacity (S45C)	*Ø25*
Maximum Spindle Stroke	*120.00*
Maximum Spindle Speed (r.p.m.)	*3,000.00*
Maximum Power (3 Phases)	*2 H.p., 220 Volts / 60 Hz.*
Spindle Pulley	*5M-66T / Ø102.30 x J x 20*
Spindle Bearings	*6007Z x 1 | 6006Z x 1* *32007 x 1 | 32006 x 1*
Pulley Bearings	*6010ZZ x 2*
Front Cover Seals	*TC90-100-12 x 1*
Spindle Seals	*TC50-65-8 x 1*
Piston O-Ring	*P90 x 2*
Front Cover O-Ring	*G62 x 1 | G90 x 1*
Propel Pressure	*(H) 30.00 ~ 40.00 Kg/cm²*
Cylinder Diameter	*14.72 cm² / Ø25.00*

*** Roundness ≤ 0.003mm*
**** All dimensions are given in millimeters.*

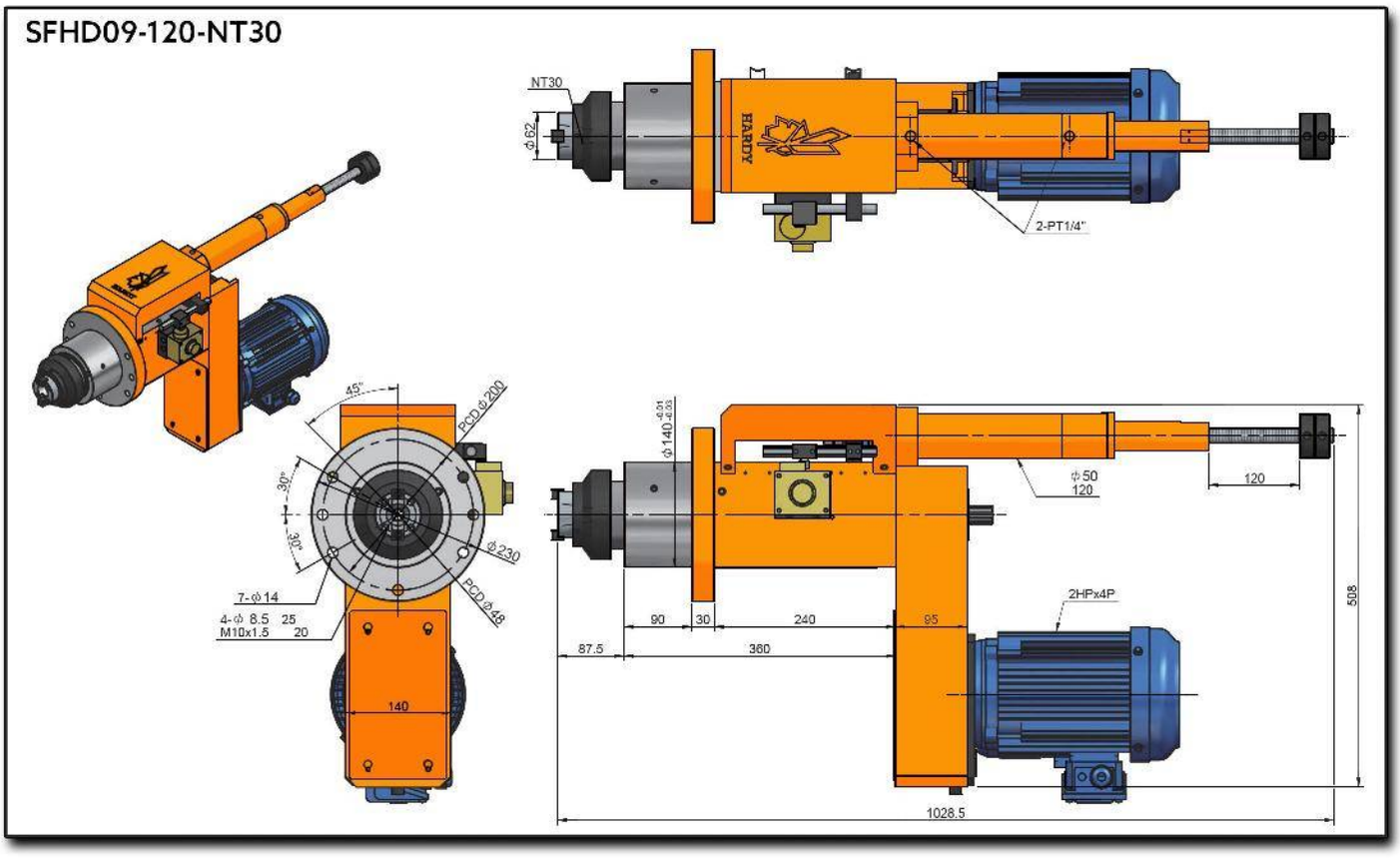
SFHD09-120-NT30
NT30
ϕ62
HARDY
2-PT1/4"
45°
PCD ϕ200
30°
30°
ϕ230
PCD ϕ48
7-ϕ14
4-ϕ 8.5 25
M10x1.5 20
140
ϕ140 -0.01 -0.03
ϕ50
120
120
2HPx4P
508
90
30
240
95
87.5
360
1028.5

SFHD09-120-NT30

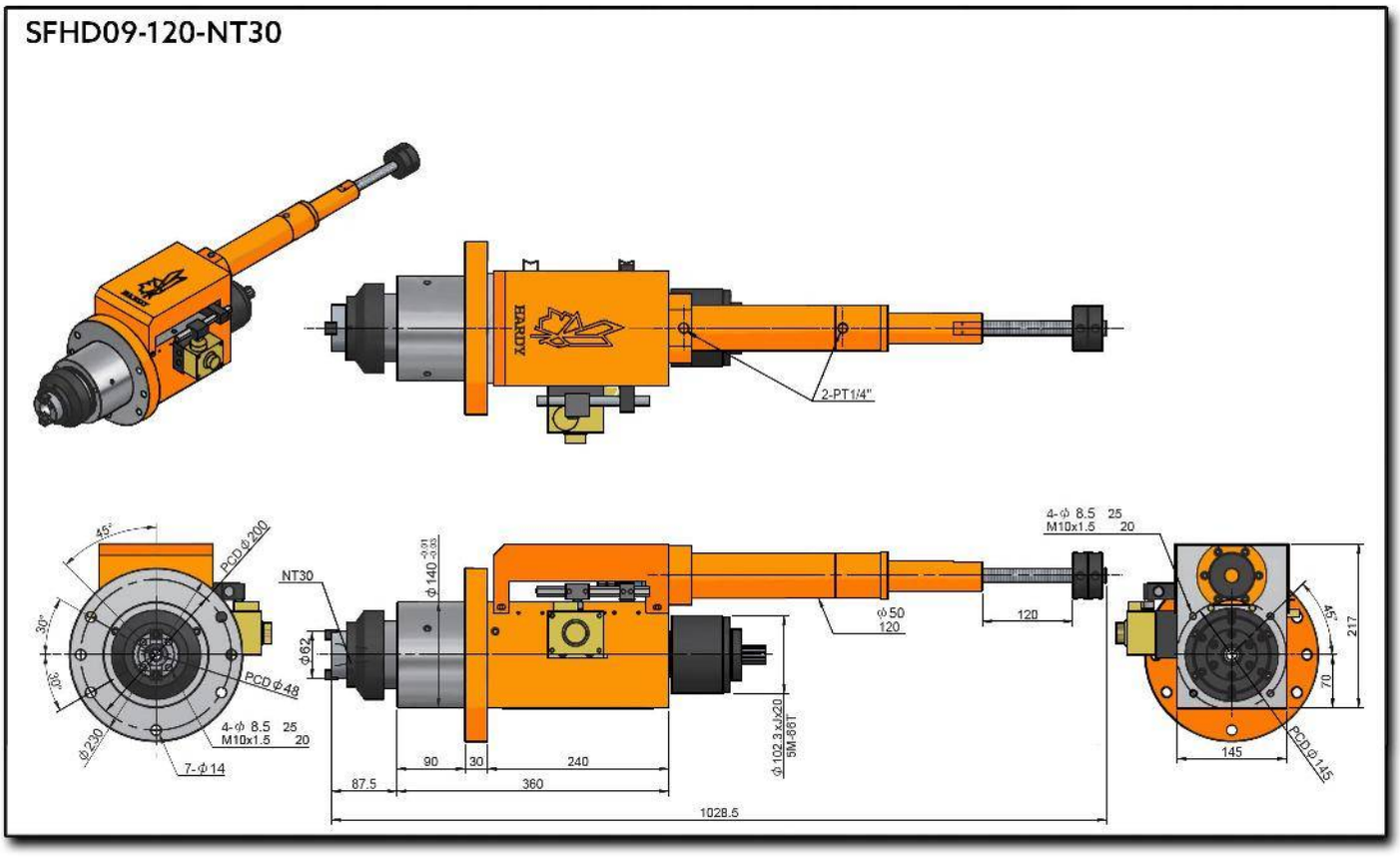

SFHD09H-120

High Performance Hydraulic Drilling Spindle Head Flange Type

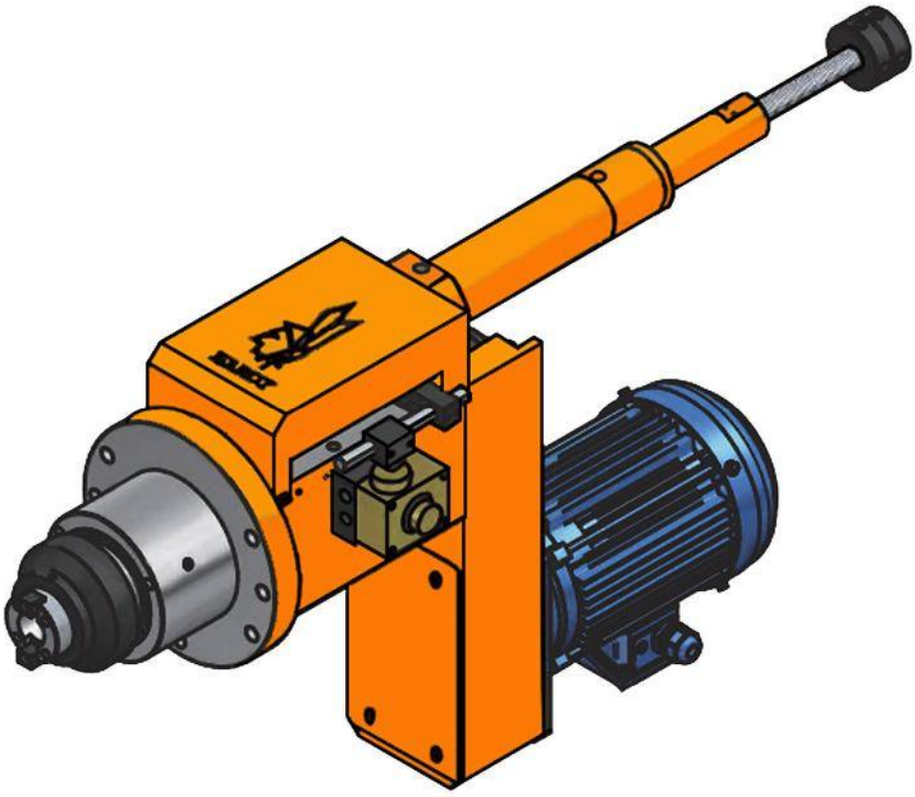

Characteristics & Dimensions

Model	SFHD09H-120
Maximum Drilling Capacity (S45C)	Ø25
Maximum Spindle Stroke	120.00
Maximum Spindle Speed (r.p.m.)	8,000.00
Maximum Power (3 Phases)	2 H.p., 220 Volts / 60 Hz.
Spindle Pulley	5M-66T / Ø102.30 x J x 20
Spindle Bearings	7007 x 2 7006 x 2
Pulley Bearings	6010ZZ x 2
Front Cover Seals	TC90-100-12 x 1
Spindle Seals	TC50-65-8 x 1
Piston O-Ring	P90 x 2
Front Cover O-Ring	G62 x 1 | G90 x 1
Propel Pressure	(H) 30.00 ~ 40.00 Kg/cm^2
Cylinder Diameter	14.72 cm^2 / Ø25.00

** Roundness ≤ 0.003mm
*** All dimensions are given in millimeters.

SFHD09H-120-NT30

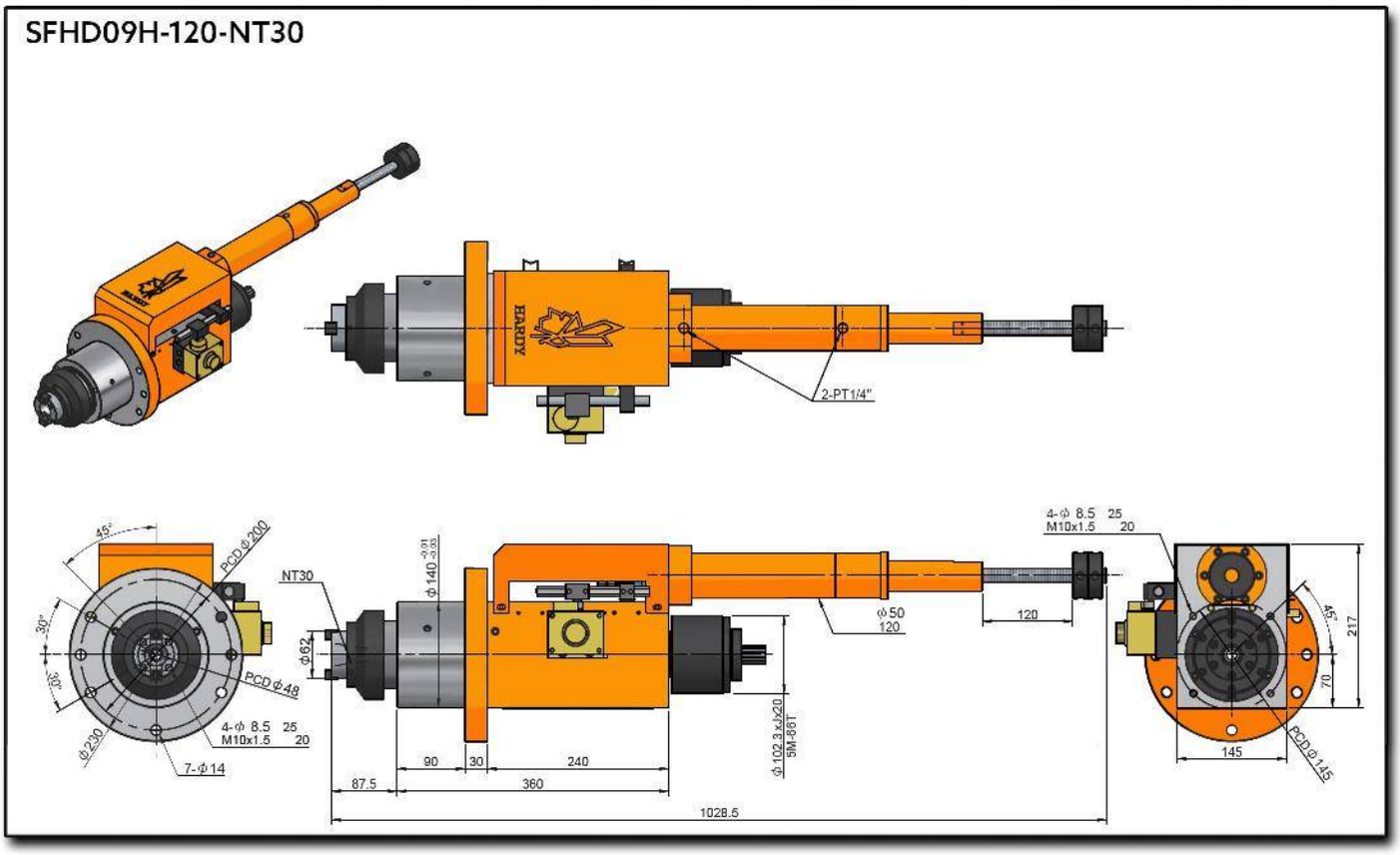

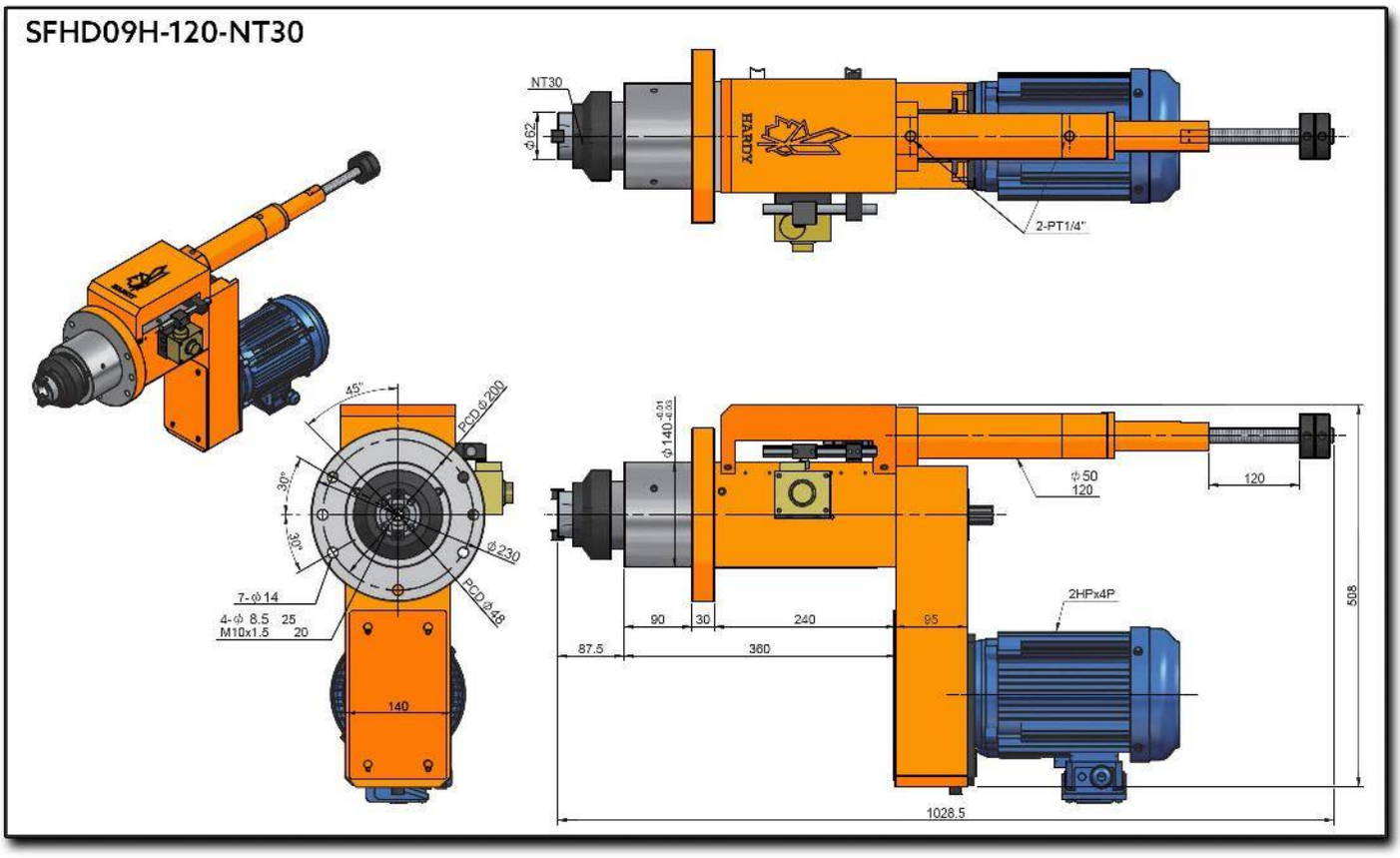
SFHD09H-120-NT30
NT30
ϕ62
HARDY
2-PT1/4"
45°
PCD ϕ200
30°
30°
ϕ230
PCD ϕ48
7-ϕ14
4-ϕ 8.5
M10x1.5
25
20
140
ϕ140 -0.01 -0.03
ϕ50
120
120
90
30
240
95
87.5
360
2HPx4P
508
1028.5

SFHD11-120

Hydraulic Drilling Spindle Head Flange Type

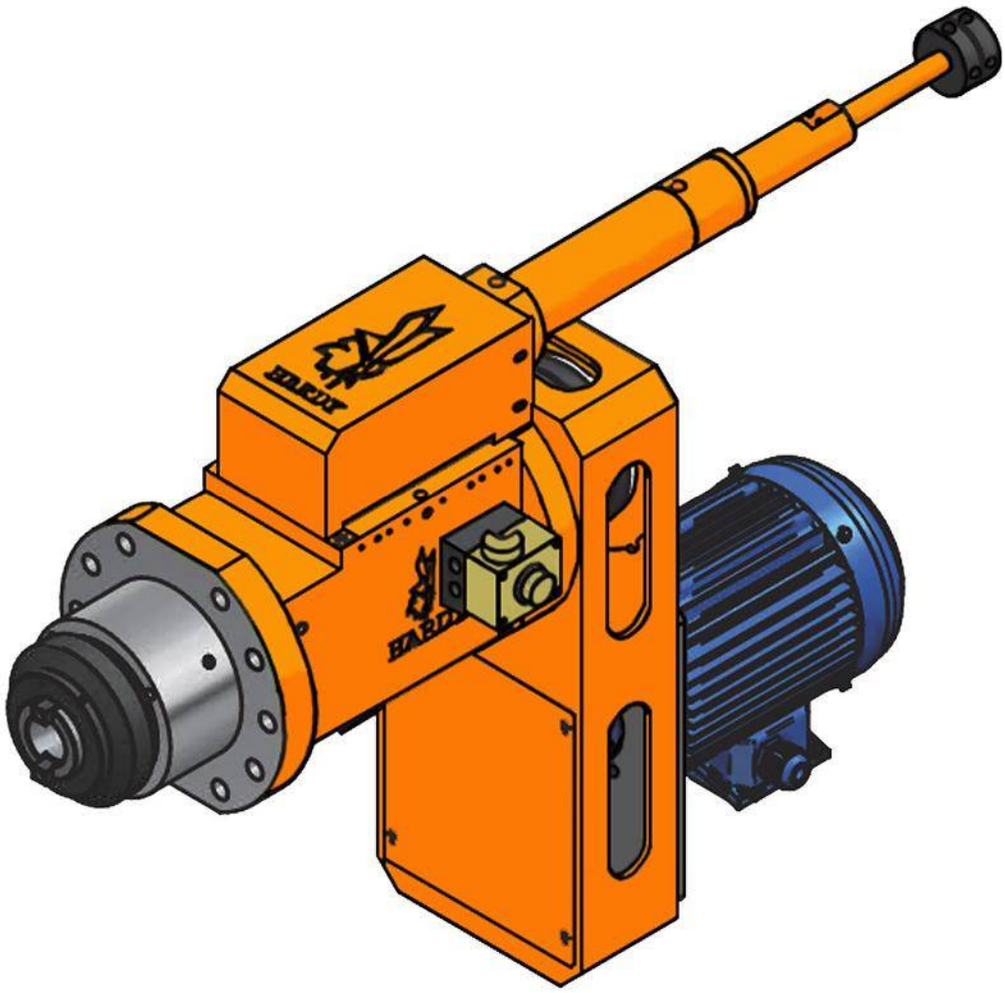

Characteristics & Dimensions

Model	SFHD11-120
Maximum Drilling Capacity (S45C)	*Ø35*
Maximum Spindle Stroke	*120.00*
Maximum Spindle Speed (r.p.m.)	*1,800.00*
Maximum Power (3 Phases)	*3 H.p., 220 Volts / 60 Hz.*
Spindle Pulley	*8M-64T*
Spindle Bearings	*6210ZZ x 2* *30210 x 2*
Pulley Bearings	*6015ZZ x 2*
Front Cover Seals	*TC110-130-13 x 1*
Spindle Seals	*TC70-90-12 x 1*
Piston O-Ring	*P110 x 2*
Front Cover O-Ring	*G85 x 1 | G110 x 1*
Propel Pressure	*(H) 30.00 ~ 40.00 Kg/cm²*
Cylinder Diameter	*14.72 cm² (Ø50.00 | Ø25.00)*

*** Roundness ≤ 0.003mm*
**** All dimensions are given in millimeters.*

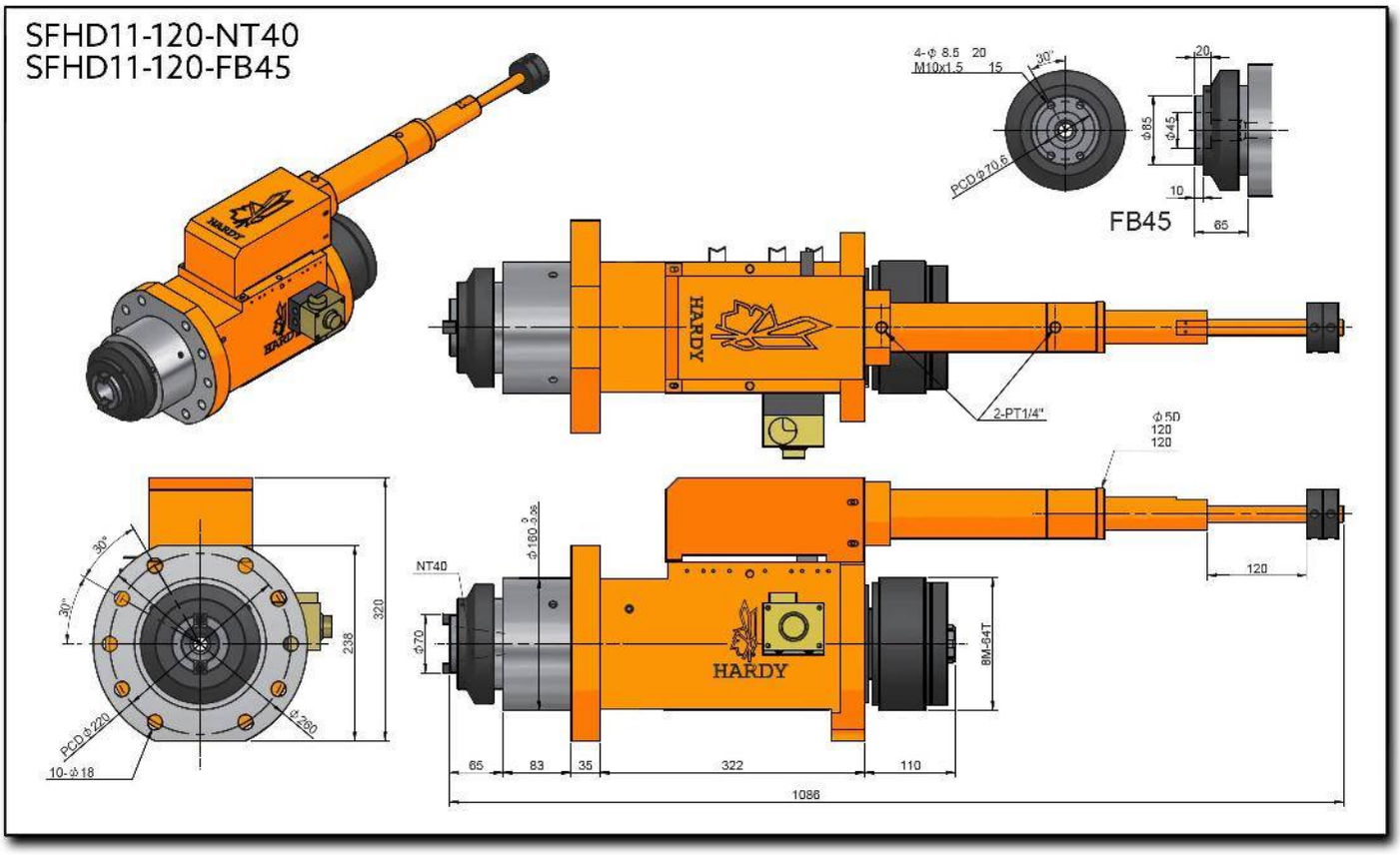
SFHD11-120-NT40
SFHD11-120-FB45
4-Φ 8.5 20
M10x1.5 15
30°
PCDΦ70.6
20
Φ85
Φ45
10
65
FB45
HARDY
2-PT1/4"
Φ50
120
120
120
NT40
Φ160
Φ70
8M-64T
30°
30°
PCDΦ220
Φ260
10-Φ18
238
320
65
83
35
322
110
1086

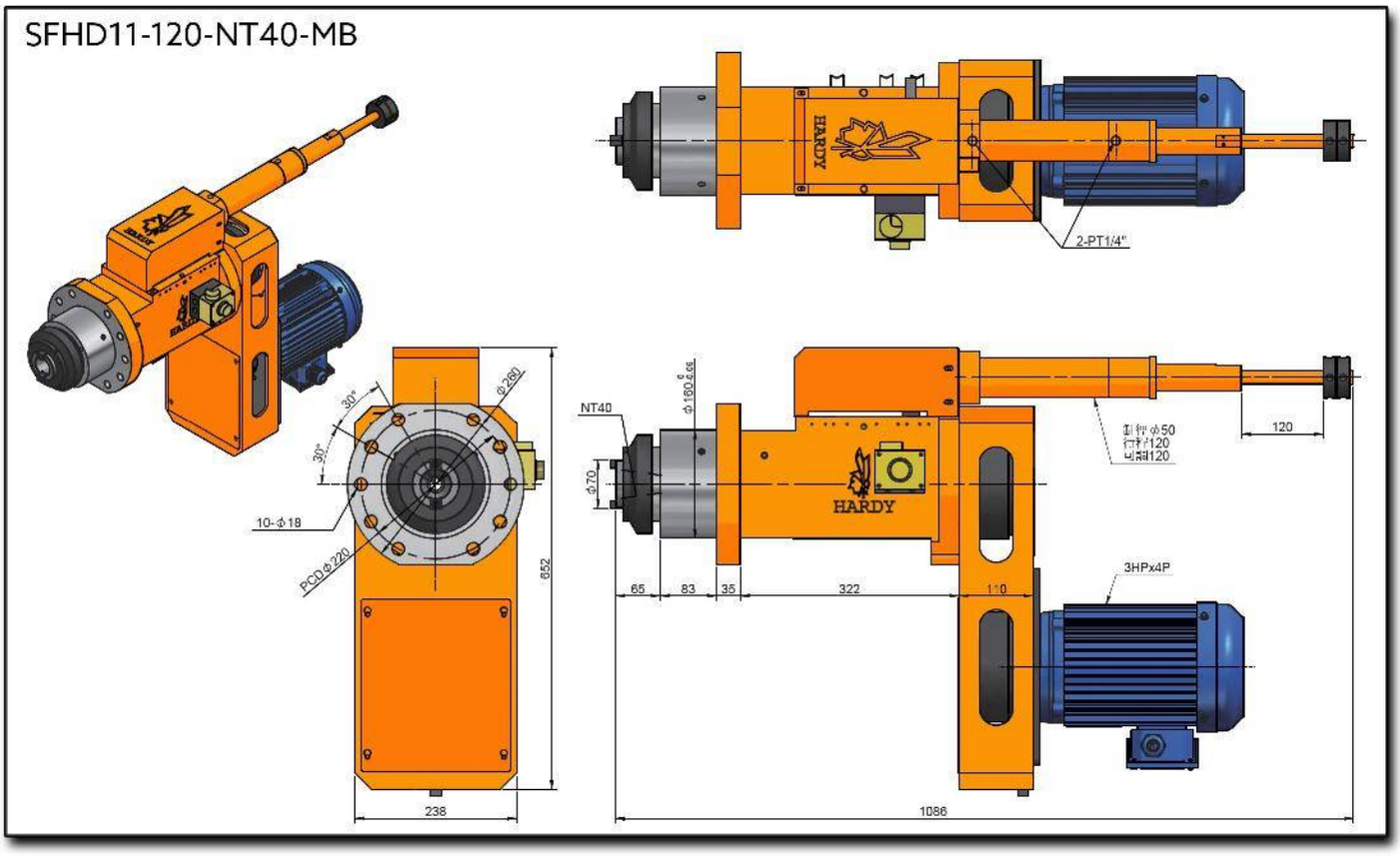
SFHD11-120-NT40-MB
HARDY
2-PT1/4"
NT40
HARDY
120
3HPx4P
65
83
35
322
110
1086
238
852
10-Φ18
PCD Φ220
30°
30°

SFHD11H-120

High Performance Hydraulic Drilling Spindle Head Flange Type

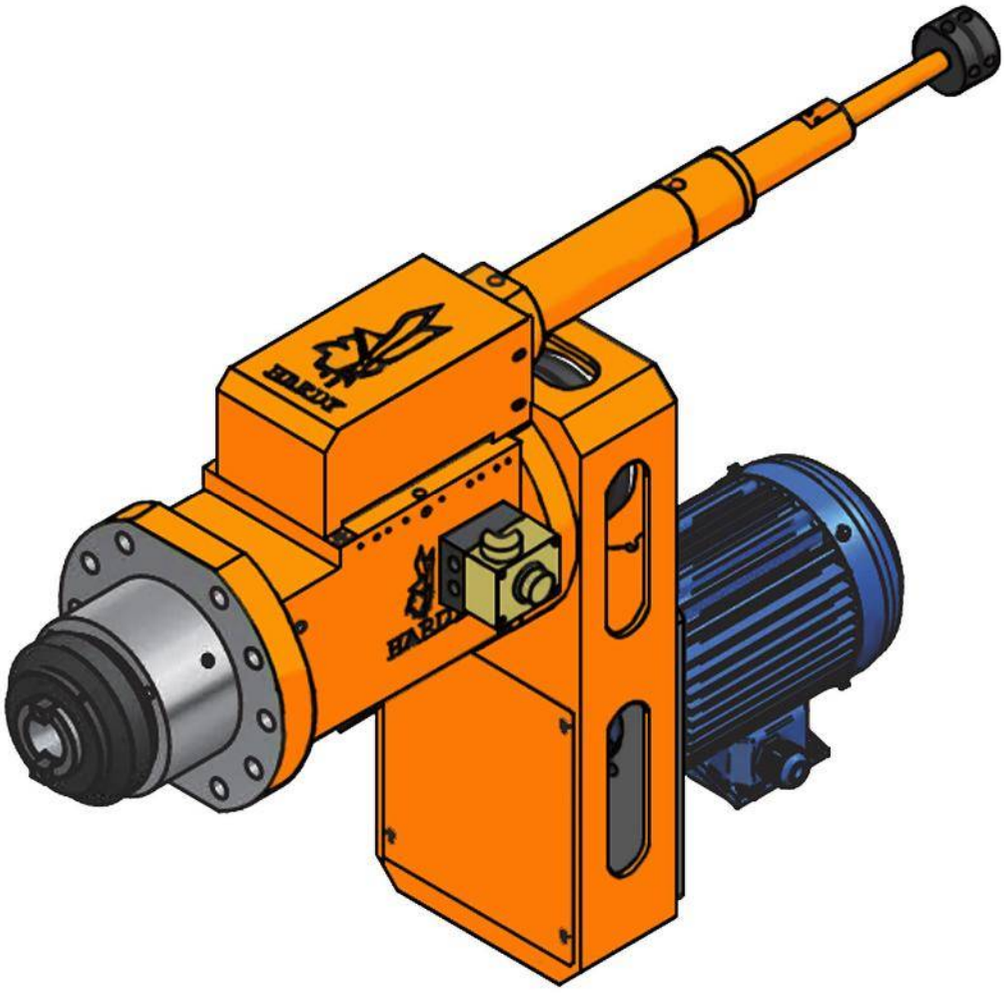

Characteristics & Dimensions

Model	SFHD11H-120
Maximum Drilling Capacity (S45C)	*Ø35*
Maximum Spindle Stroke	*120.00*
Maximum Spindle Speed (r.p.m.)	*4,000.00*
Maximum Power (3 Phases)	*3 H.p., 220 Volts / 60 Hz.*
Spindle Pulley	*8M-64T*
Spindle Bearings	*7210 x 4*
Pulley Bearings	*6015ZZ x 2*
Front Cover Seals	*TC110-130-13 x 1*
Spindle Seals	*TC70-90-12 x 1*
Piston O-Ring	*P110 x 2*
Front Cover O-Ring	*G85 x 1 | G110 x 1*
Propel Pressure	*(H) 30.00 ~ 40.00 Kg/cm²*
Cylinder Diameter	*14.72 cm² (Ø50.00 | Ø25.00)*

*** Roundness ≤ 0.003mm*
**** All dimensions are given in millimeters.*

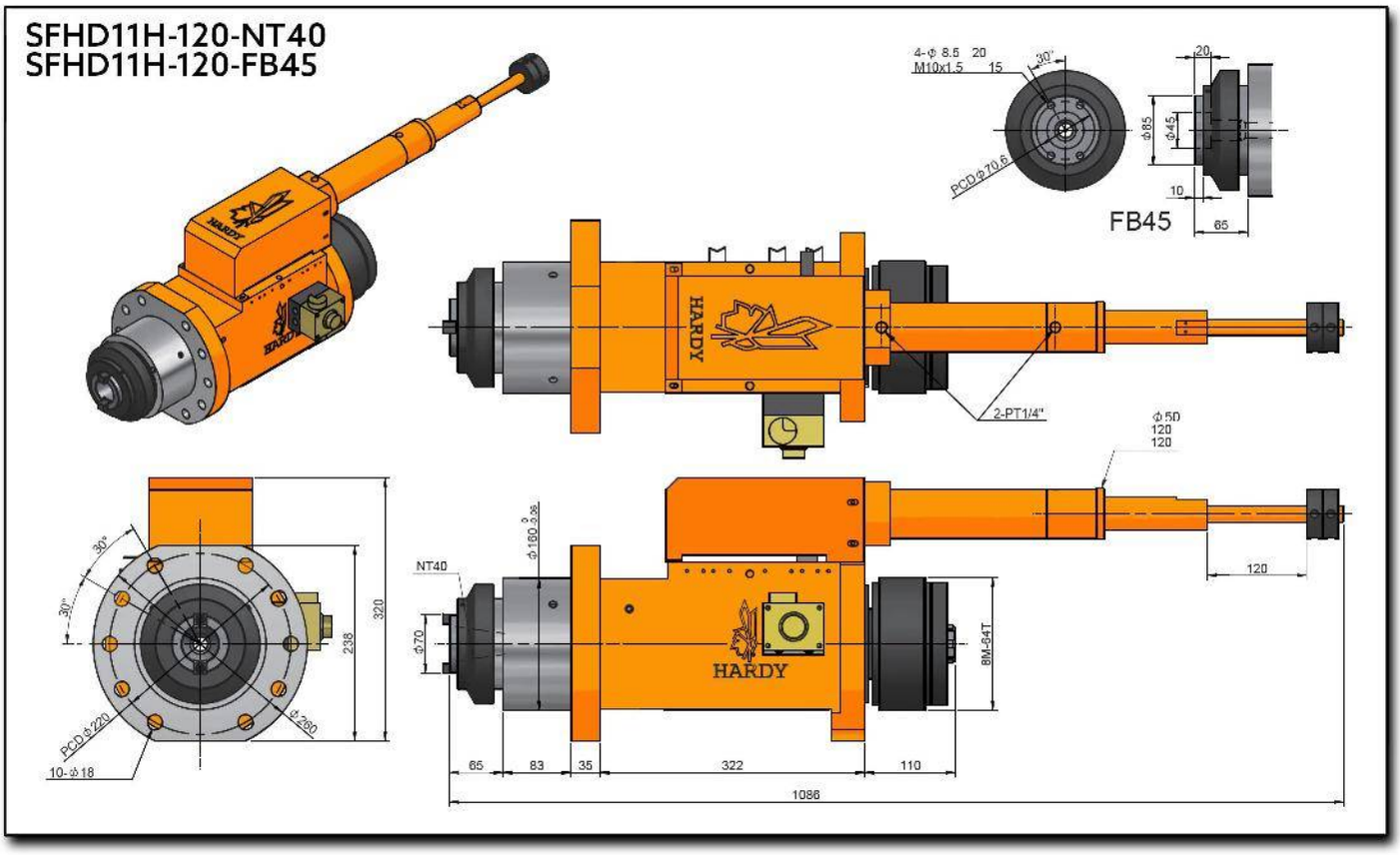
SFHD11H-120-NT40
SFHD11H-120-FB45
4-Φ 8.5 20
M10x1.5 15
30°
PCDΦ70.6
20
Φ85
Φ45
10
65
FB45
HARDY
2-PT1/4"
Φ50
120
120
120
NT40
Φ160
Φ70
8M-64T
30°
30°
PCDΦ220
Φ260
10-Φ18
238
320
65
83
35
322
110
1086

SFHD11H-120-NT40

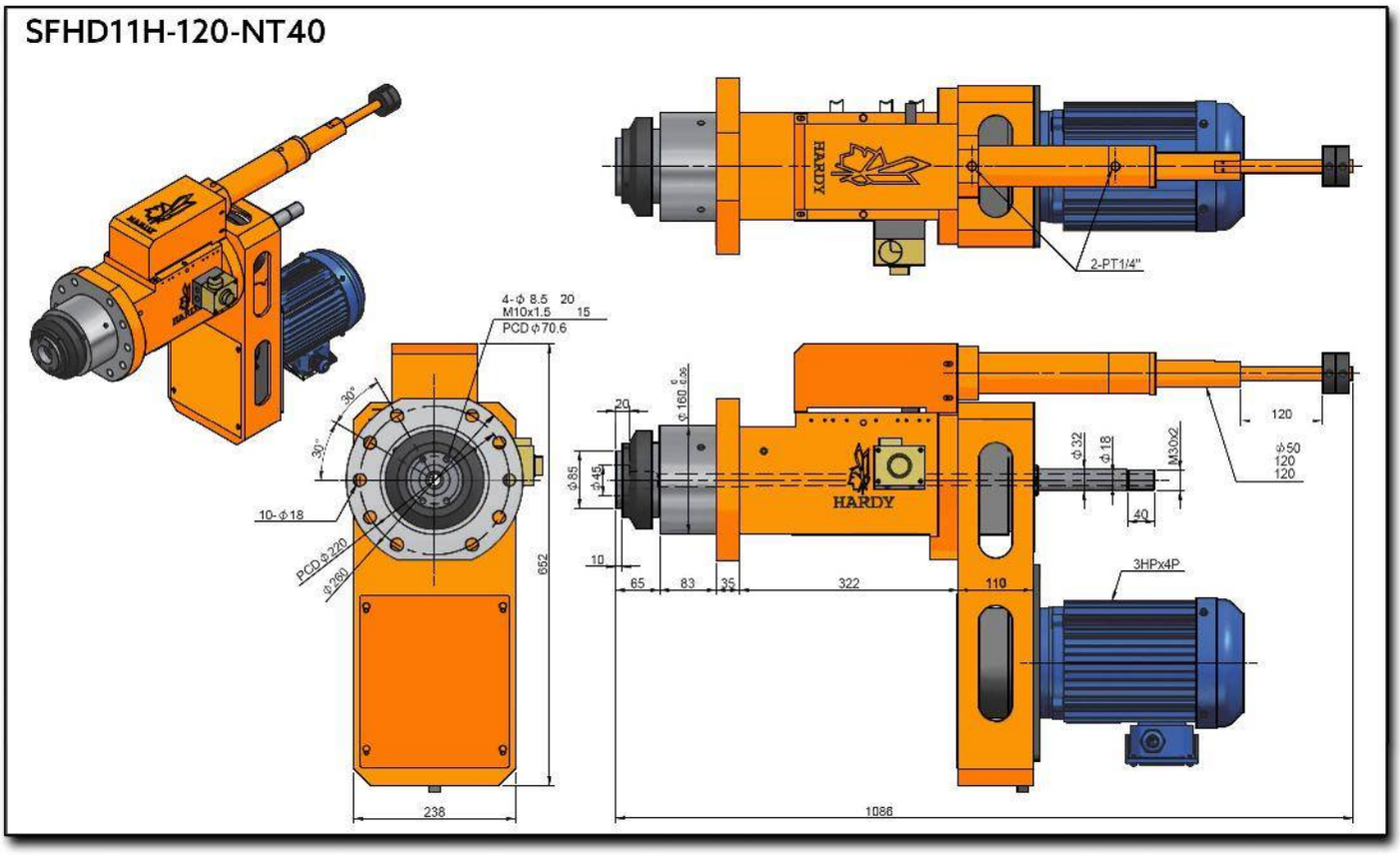

SFHD12-150

Hydraulic Drilling Spindle Head Flange Type

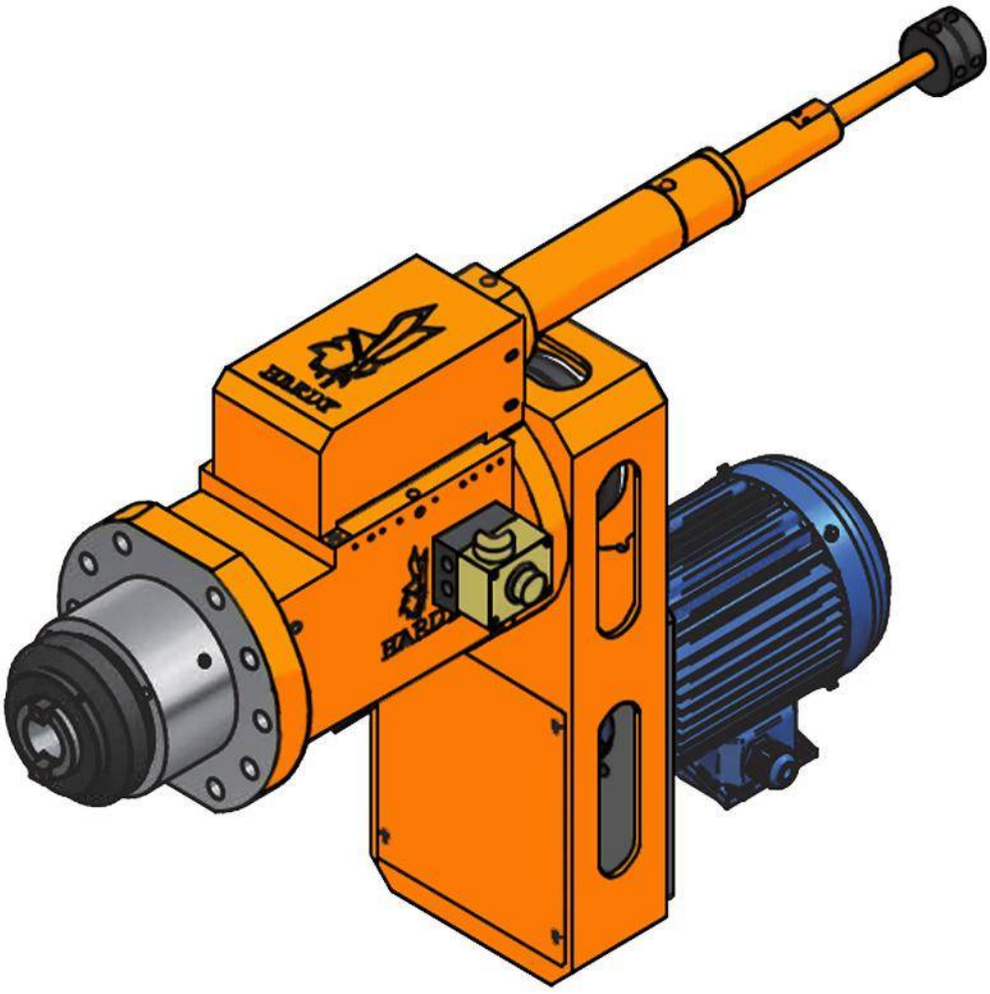

Characteristics & Dimensions

Model	SFHD12-150
Maximum Drilling Capacity (S45C)	Ø35
Maximum Spindle Stroke	150.00
Maximum Spindle Speed (r.p.m.)	2,000.00
Maximum Power (3 Phases)	3 H.p. x 4P, 220 Volts / 60 Hz.
Spindle Pulley	8M-54T | Ø133.6 x J x 25
Spindle Bearings	6011Z x 1 | 6009Z x 1 32011 x 1 ° 32009 x 1
Pulley Bearings	6211ZZ x 2
Front Cover Seals	TC120-145-12 x 1
Spindle Seals	TC75-90-12 x 1
Piston O-Ring	P120 x 2
Front Cover O-Ring	G85 x 1 | G120 x 1
Propel Pressure	(H) 30.00 ~ 40.00 Kg/cm^2
Cylinder Diameter	21.20 cm^2 (Ø60.00 | Ø35.00)

** Roundness ≤ 0.003mm
*** All dimensions are given in millimeters.

SFHD12-NT40

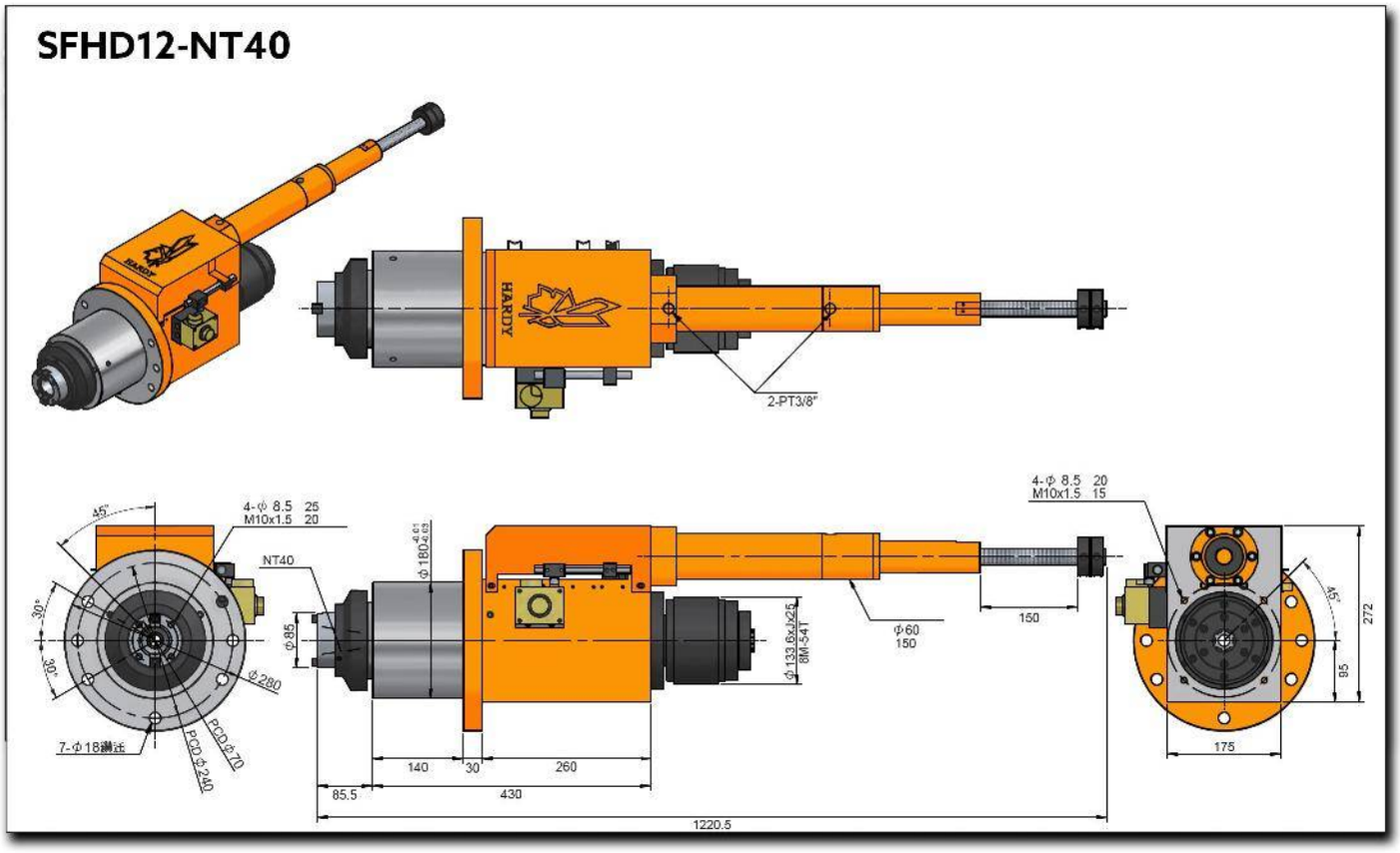

HARDY
2-PT3/8"
4-φ 8.5 25
M10x1.5 20
NT40
φ180
φ85
φ133.6xJx25
8M-54T
φ60
150
4-φ 8.5 20
M10x1.5 15
45°
30°
30°
φ280
7-φ18溝通
PCD φ70
PCD φ240
140
30
260
85.5
430
1220.5
150
45°
272
95
175

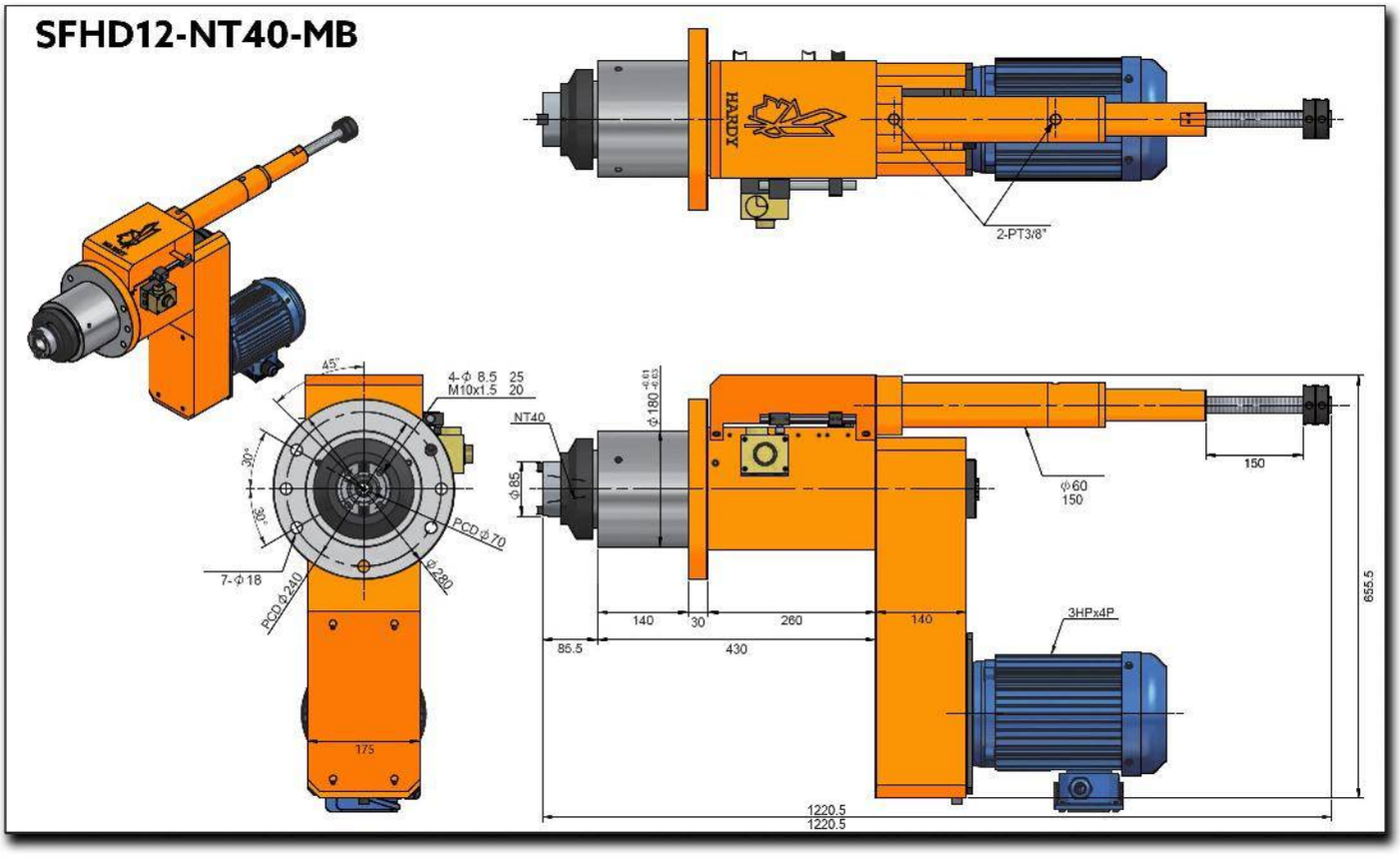
SFHD12-NT40-MB
HARDY
2-PT3/8"
45°
4-Φ 8.5 25
M10x1.5 20
30°
30°
PCD Φ70
7-Φ 18
PCD Φ240
Φ280
175
NT40
Φ85
Φ180 -0.01 -0.03
Φ60
150
150
140
30
260
140
86.5
430
3HPx4P
655.5
1220.5
1220.5

SFHD12H-150

High Performance Hydraulic Drilling Spindle Head Flange Type

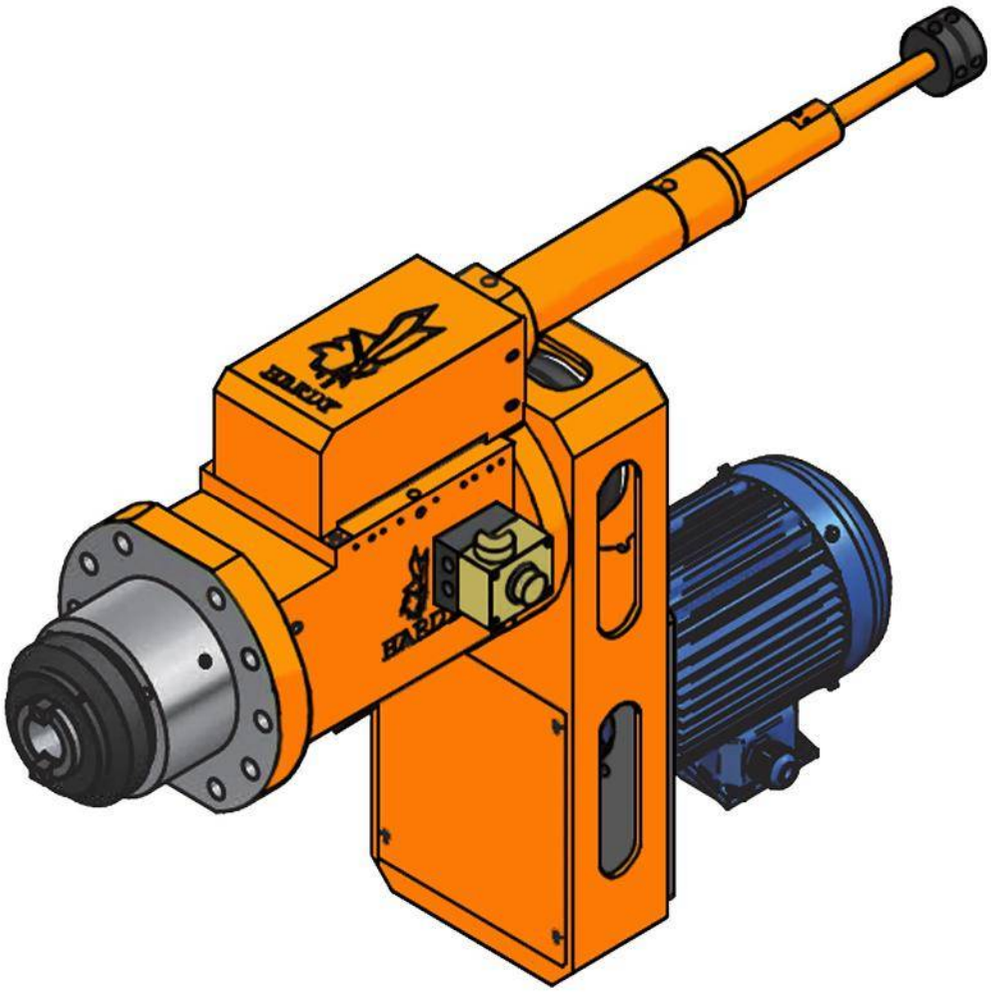

Characteristics & Dimensions

Model	SFHD12H-150
Maximum Drilling Capacity (S45C)	Ø35
Maximum Spindle Stroke	150.00
Maximum Spindle Speed (r.p.m.)	6,000.00
Maximum Power (3 Phases)	3 H.p. x 4P, 220 Volts / 60 Hz.
Spindle Pulley	8M-54T | Ø133.6 x J x 25
Spindle Bearings	7011 x 2 7009 x 2
Pulley Bearings	6211ZZ x 2
Front Cover Seals	TC120-145-12 x 1
Spindle Seals	TC75-90-12 x 1
Piston O-Ring	P120 x 2
Front Cover O-Ring	G85 x 1 | G120 x 1
Propel Pressure	(H) 30.00 ~ 40.00 Kg/cm^2
Cylinder Diameter	21.20 cm^2 (Ø60.00 | Ø35.00)

** Roundness ≤ 0.003mm
*** All dimensions are given in millimeters.

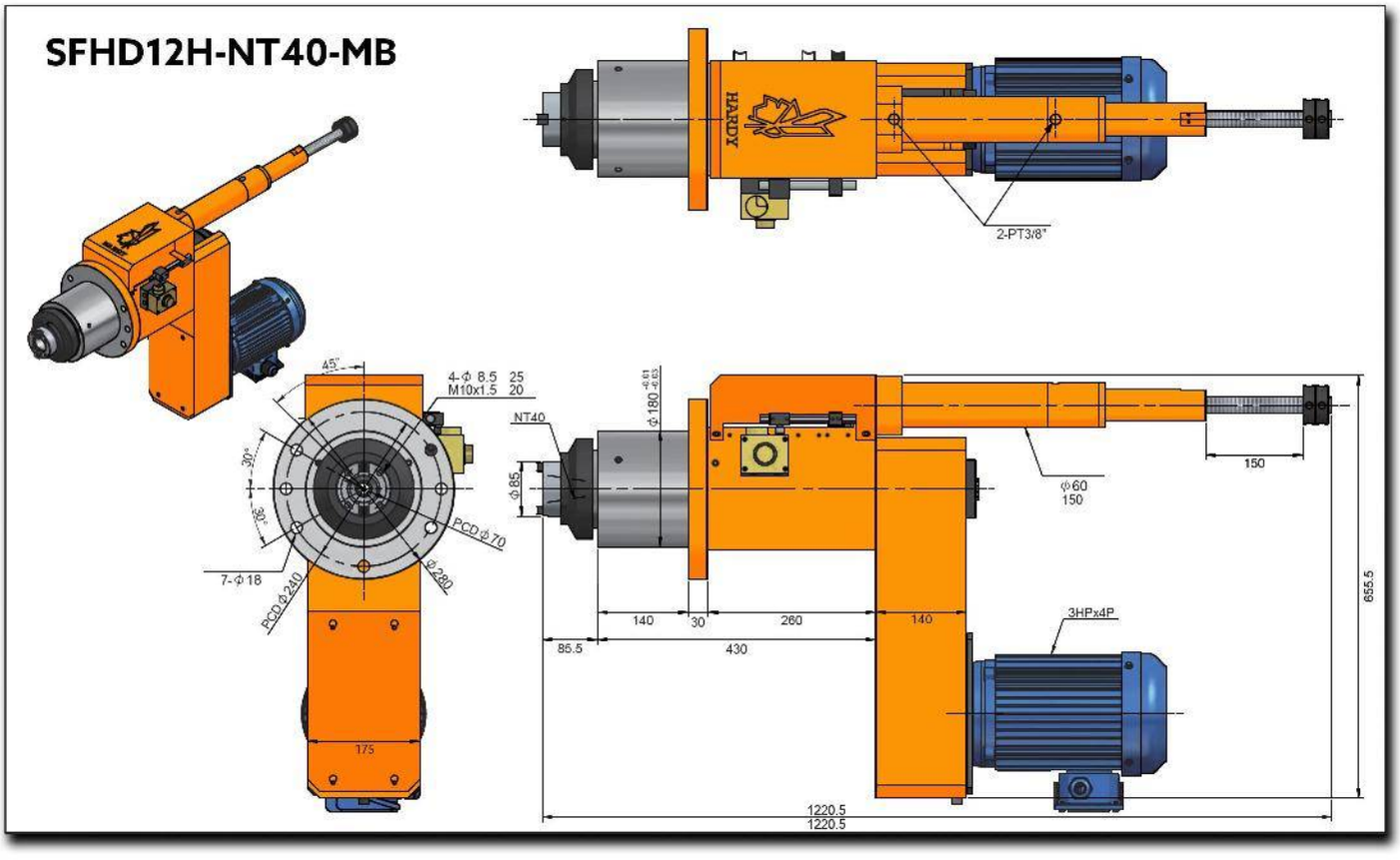
SFHD12H-NT40-MB
HARDY
2-PT3/8"
45°
4-Φ 8.5 25
M10x1.5 20
30°
30°
PCD Φ70
7-Φ 18
PCD Φ240
Φ280
175
NT40
Φ85
Φ180 -0.01 -0.03
Φ60
150
150
140
30
260
140
86.5
430
3HPx4P
655.5
1220.5
1220.5

SFHD12H-NT40

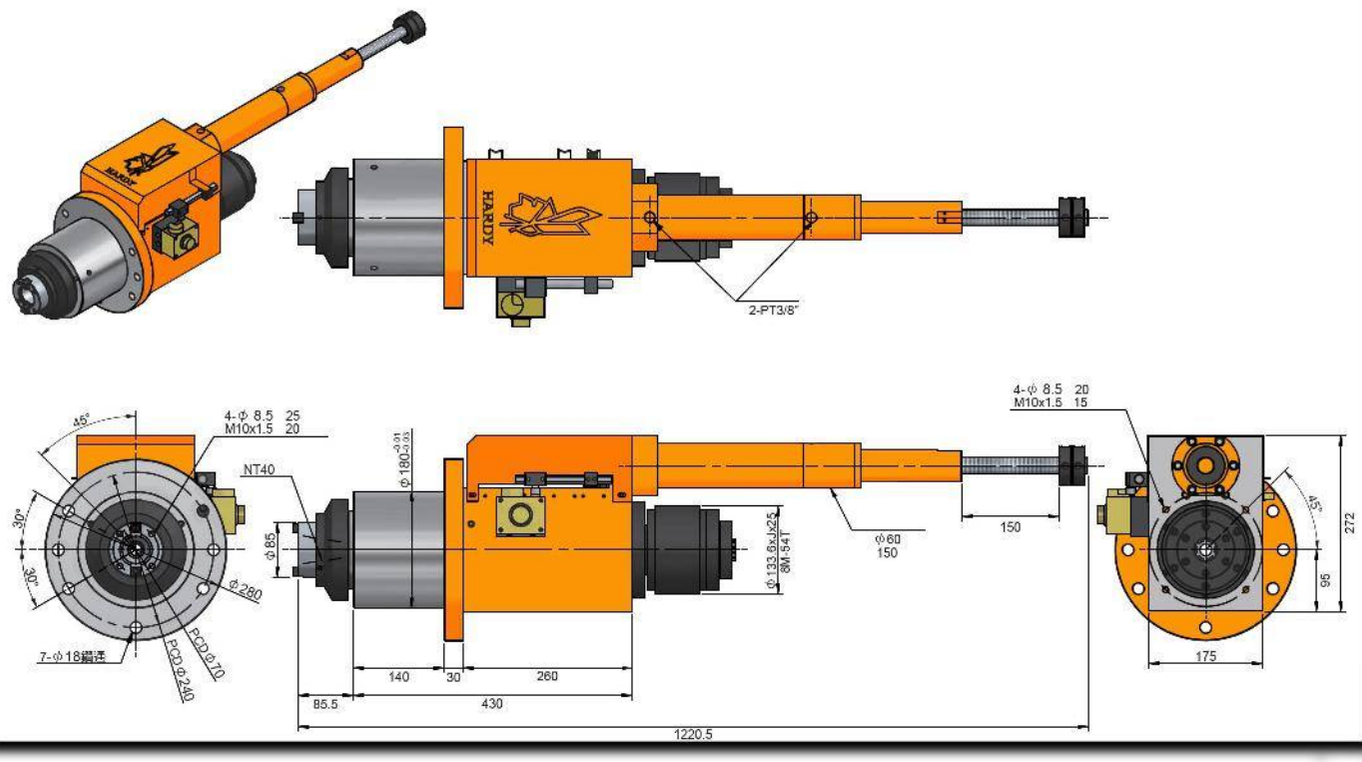

SFHD15-150

Hydraulic Drilling Spindle Head Flange Type

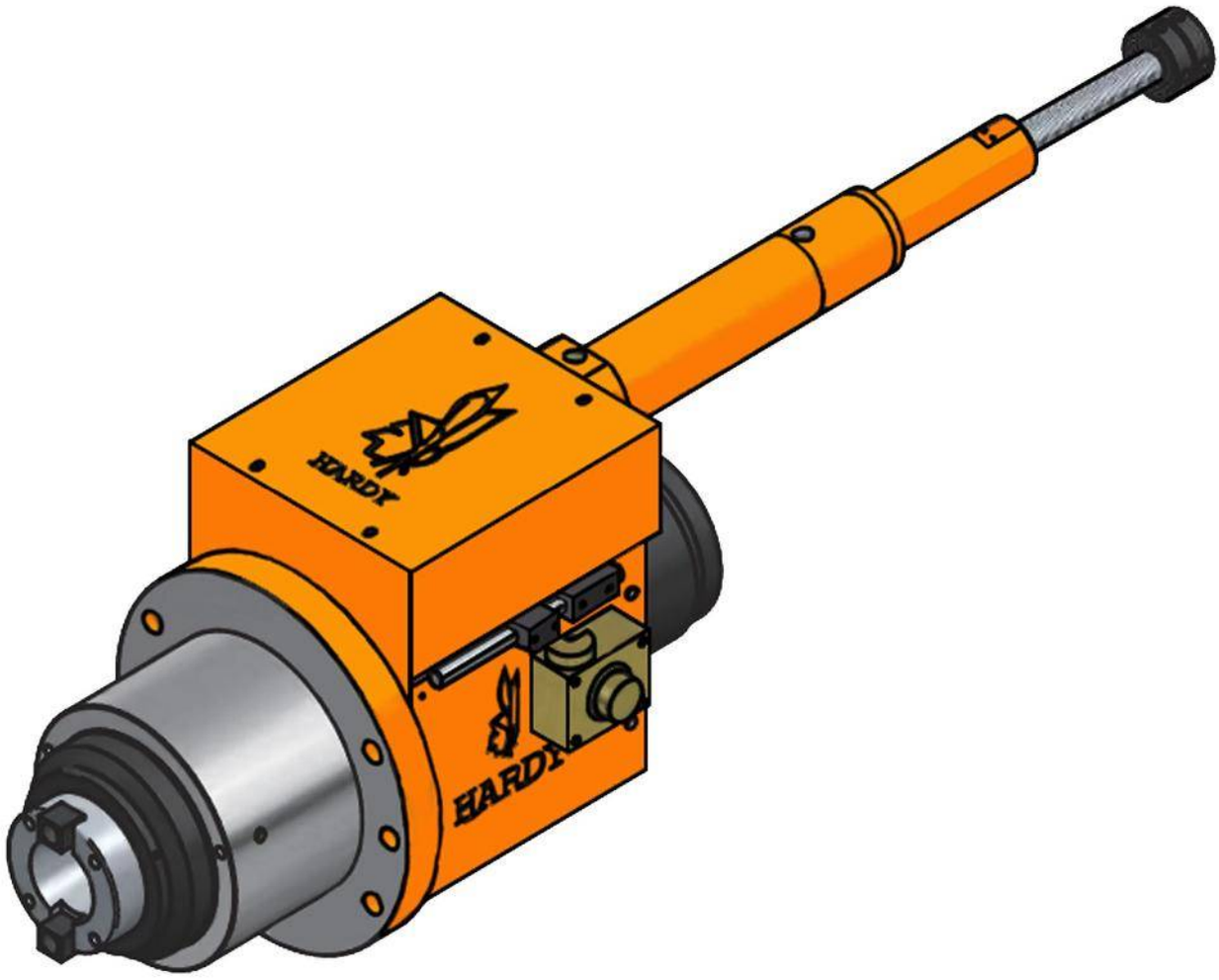

Characteristics & Dimensions

Model	SFHD15-150
Maximum Drilling Capacity (S45C)	*Ø50*
Maximum Spindle Stroke	*150.00*
Maximum Spindle Speed (r.p.m.)	*1,600.00*
Maximum Power (3 Phases)	*5 H.p. x 4P, 220 Volts / 60 Hz.*
Spindle Pulley	*8M-62T | Ø156.50 x J x 25.00*
Spindle Bearings	*6014Z x 1 | 6012Z* *32014 x 1 | 32012 x 1*
Pulley Bearings	*6213ZZ x 2*
Front Cover Seals	*TC150-180-14 x 1*
Spindle Seals	*TC90-100-12 x 1*
Piston O-Ring	*P150 x 2*
Front Cover O-Ring	*G120 x 1 | G150 x 1*
Propel Pressure	*(H) 30.00 ~ 40.00 Kg/cm²*
Cylinder Diameter	*21.20 cm² (Ø60.00 | Ø30.00)*

*** Roundness ≤ 0.003mm*
**** All dimensions are given in millimeters.*

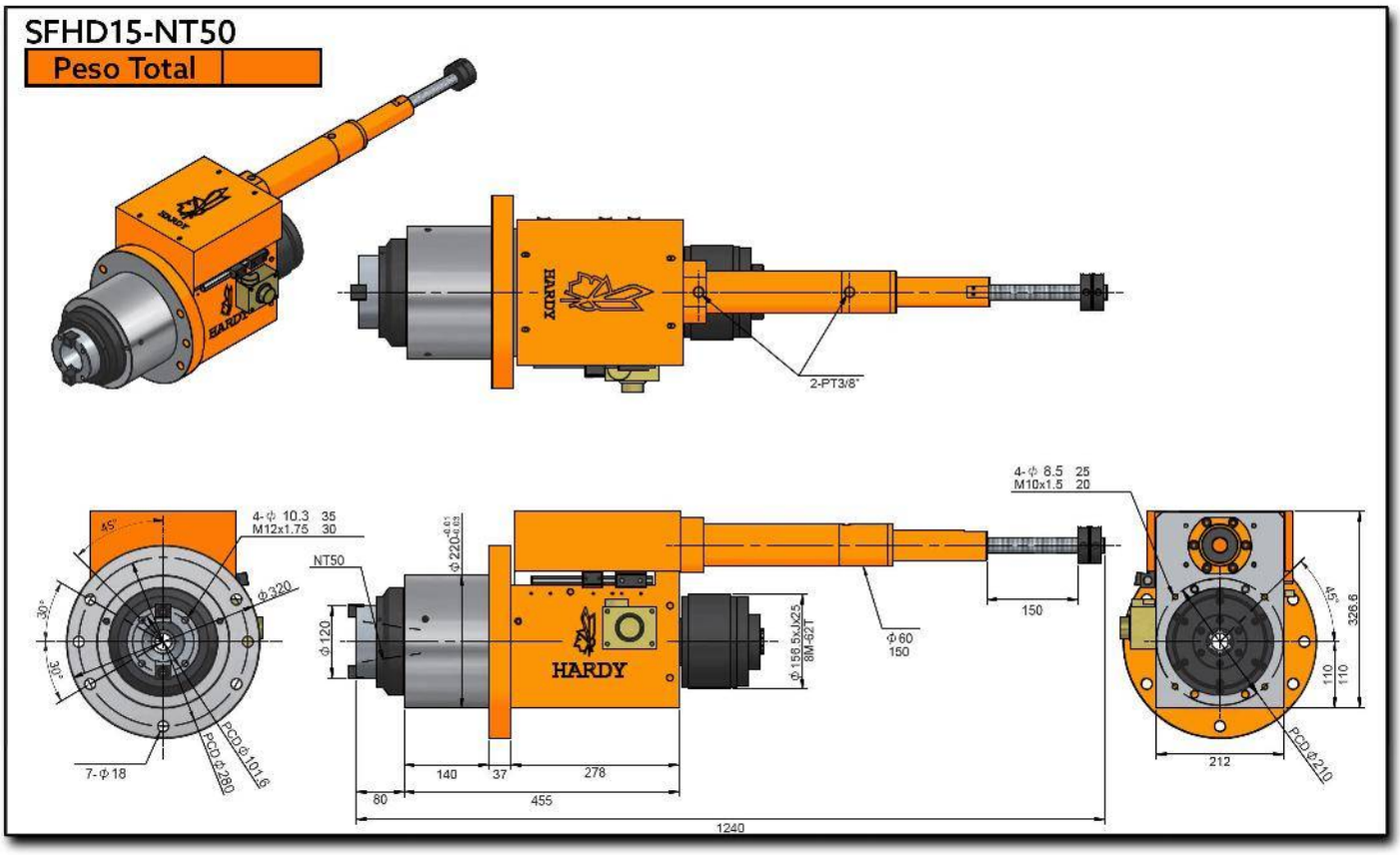
SFHD15-NT50
Peso Total
HARDY
2-PT3/8"
4-φ 8.5 25
M10x1.5 20
4-φ 10.3 35
M12x1.75 30
NT50
φ320
φ120
φ220
φ156.5xJx25
8M-62T
φ60
150
150
45°
30°
30°
7-φ18
PCD φ101.6
PCD φ280
140
37
278
80
455
1240
212
PCD φ210
326.6
110
110

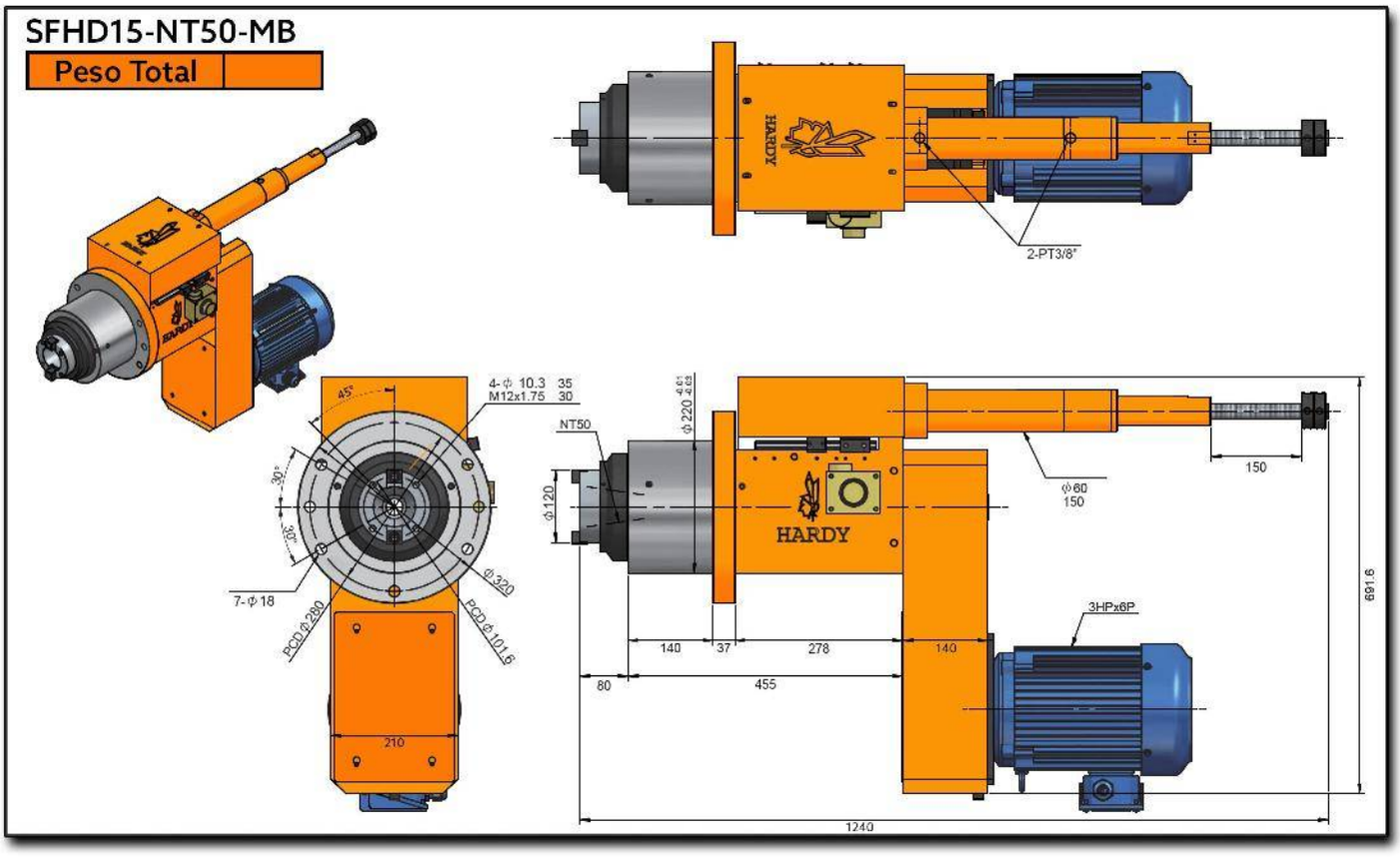
SFHD15-NT50-MB
Peso Total
HARDY
2-PT3/8"
4-ϕ 10.3 35
M12x1.75 30
45°
30°
30°
7-ϕ18
PCD ϕ280
ϕ320
PCD ϕ101.6
210
NT50
ϕ220 -0.01 -0.03
ϕ120
HARDY
ϕ60
150
150
3HPx6P
691.6
140
37
278
140
80
455
1240

SFHD15H-150

High Performance Hydraulic Drilling Spindle Head Flange Type

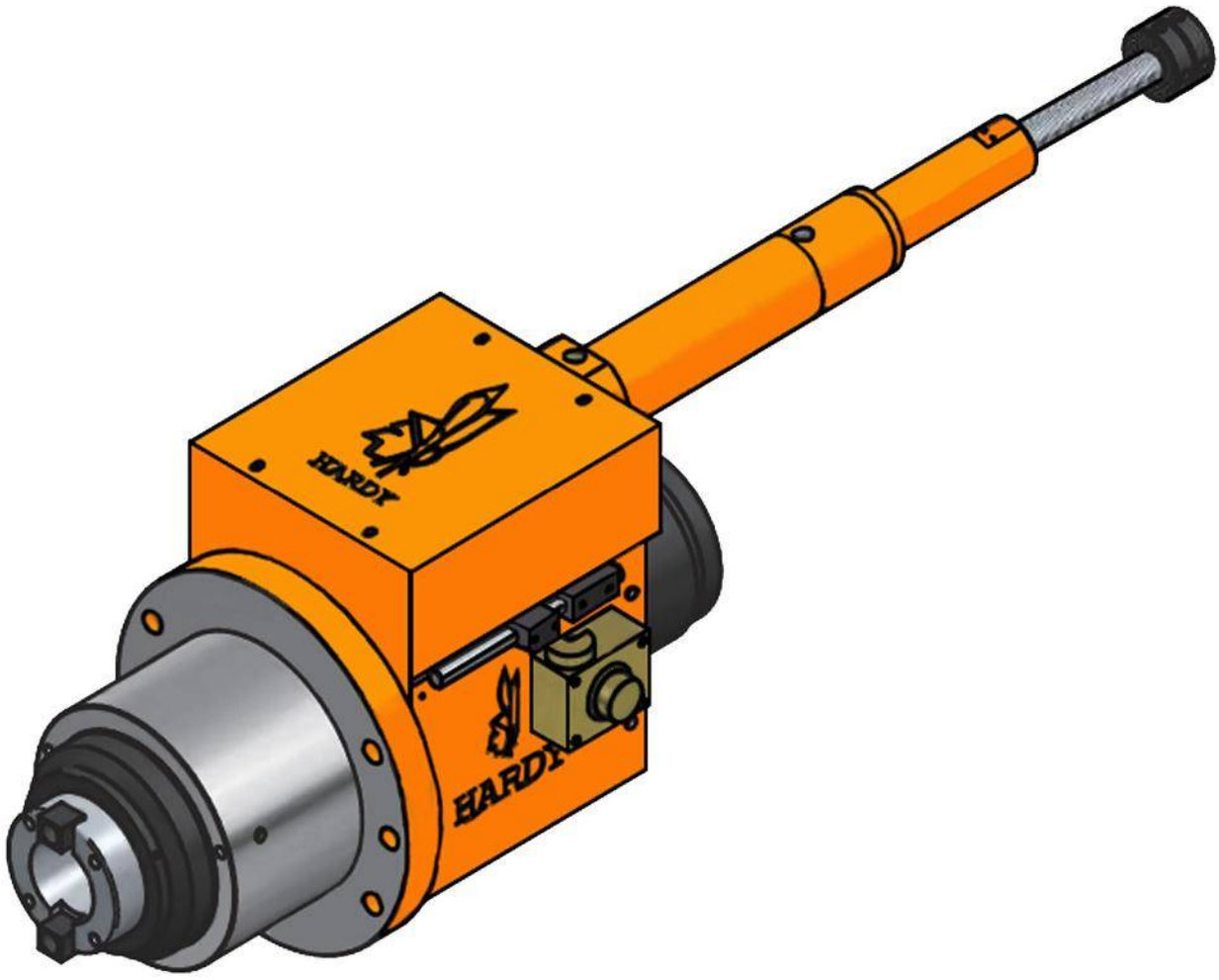

Characteristics & Dimensions

Model	SFHD15H-150
Maximum Drilling Capacity (S45C)	*Ø50*
Maximum Spindle Stroke	*150.00*
Maximum Spindle Speed (r.p.m.)	*4,000.00*
Maximum Power (3 Phases)	*5 H.p. x 4P, 220 Volts / 60 Hz.*
Spindle Pulley	*8M-62T | Ø156.50 x J x 25.00*
Spindle Bearings	*7014 x 2* *7012 x 2*
Pulley Bearings	*6213ZZ x 2*
Front Cover Seals	*TC150-180-14 x 1*
Spindle Seals	*TC90-100-12 x 1*
Piston O-Ring	*P150 x 2*
Front Cover O-Ring	*G120 x 1 | G150 x 1*
Propel Pressure	*(H) 30.00 ~ 40.00 Kg/cm²*
Cylinder Diameter	*21.20 cm² (Ø60.00 | Ø30.00)*

*** Roundness ≤ 0.003mm*
**** All dimensions are given in millimeters.*

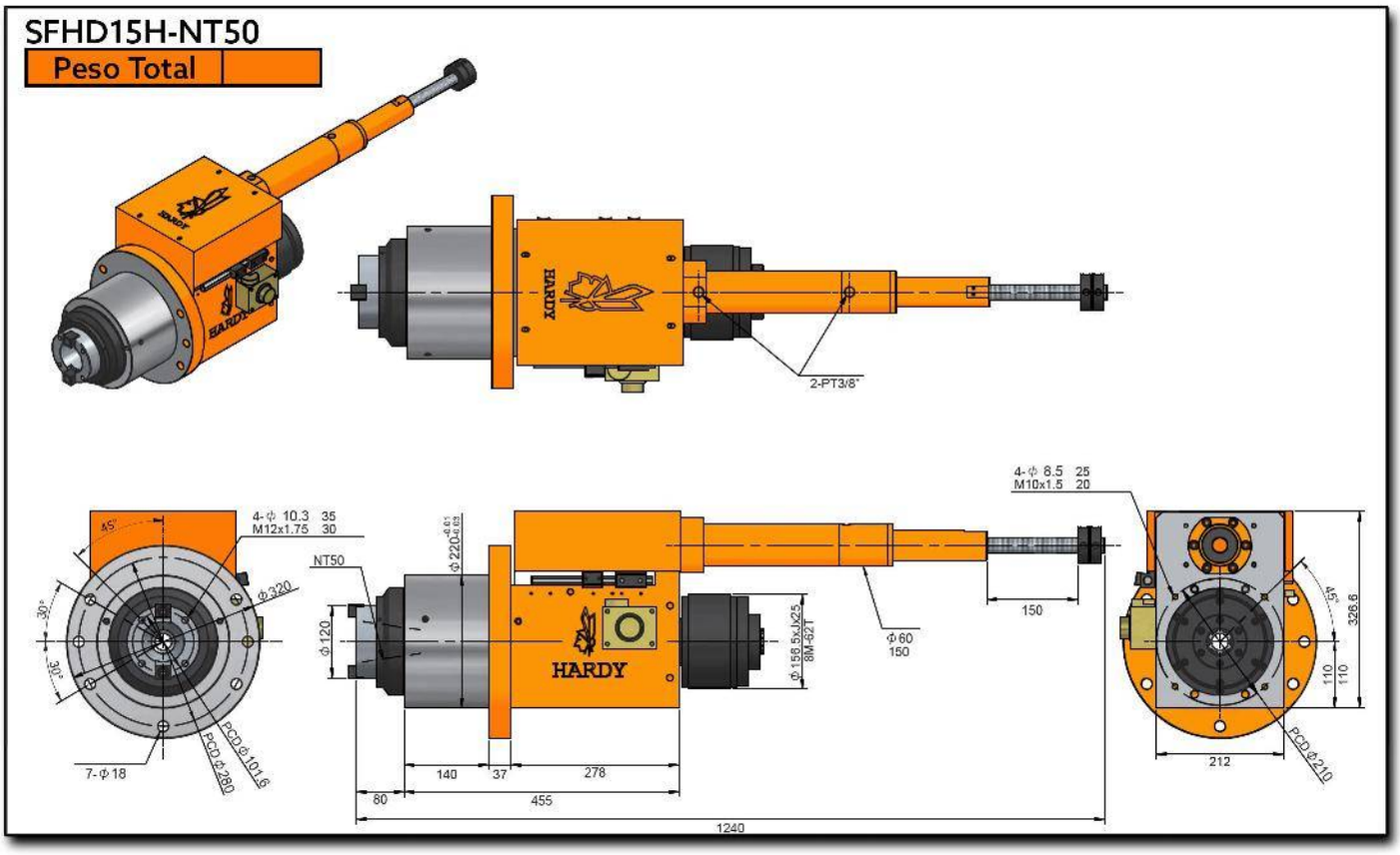
SFHD15H-NT50
Peso Total
HARDY
2-PT3/8"
4-φ 8.5 25
M10x1.5 20
4-φ 10.3 35
M12x1.75 30
NT50
φ320
φ120
φ220
φ156.5xJx25
8M-62T
φ60
150
150
45°
30°
30°
7-φ18
PCD φ101.6
PCD φ280
140
37
278
80
455
1240
212
PCD φ210
326.6
110
110

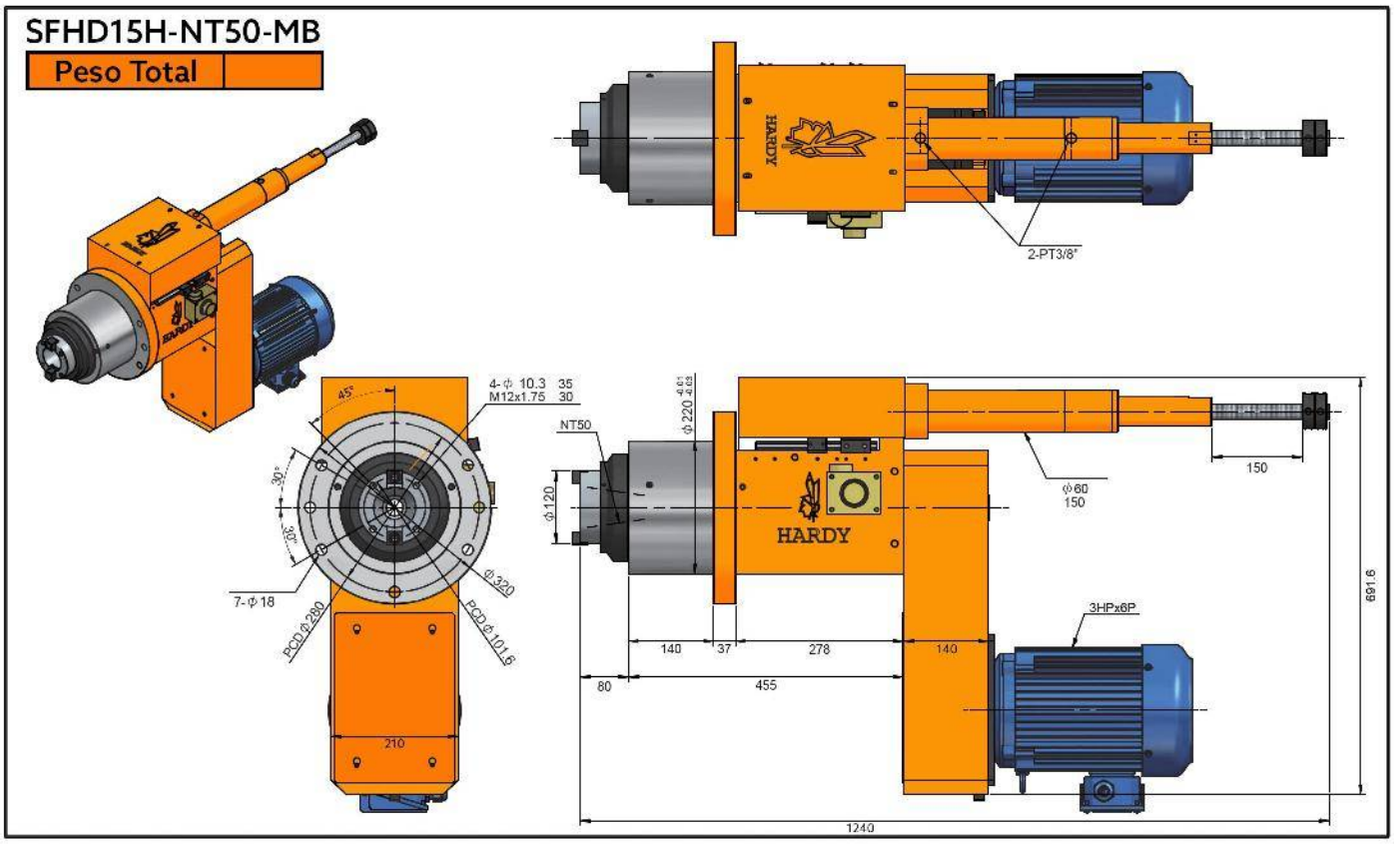
SFHD15H-NT50-MB
Peso Total
HARDY
2-PT3/8"
4-ϕ 10.3 35
M12x1.75 30
45°
30°
30°
7-ϕ18
PCD ϕ280
ϕ320
PCD ϕ101.6
210
NT50
ϕ220 -0.01 -0.03
ϕ120
ϕ60
150
150
HARDY
3HPx6P
140
37
278
140
80
455
691.6
1240

SFSD SERIES

DRILLING/TAPPING SERVO COMPACT SPINDLES FLAGE TYPE

SFSD06-100

Drilling/Tapping Servo Spindle Head Flange Type

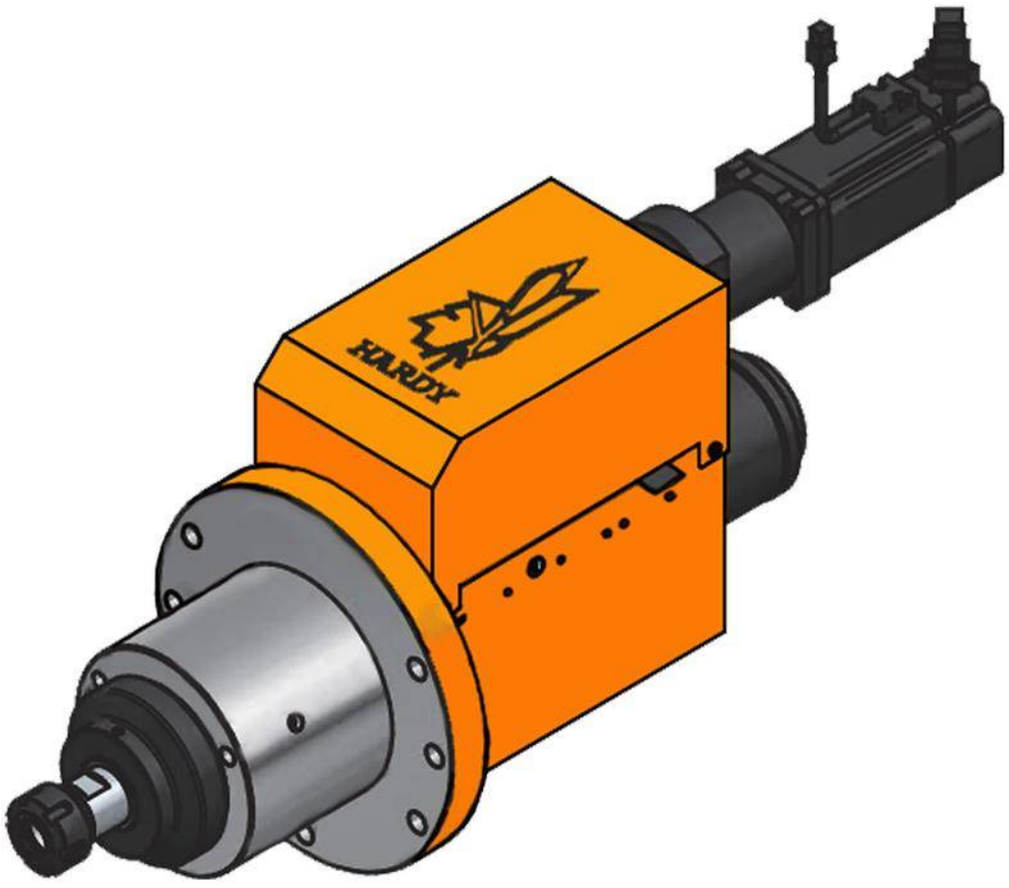

Characteristics & Dimensions

Model	SFSD06-100M
Drilling Capacity (S45C)	*Ø 16*
Maximum Stroke	*100 mm.*
Maximum Speed (r.p.m.)	*3,500*
Electric Power Maximum Power	*1 H.p. x 4P*
Spindle Polley	*5M-50T | Ø78.5 x J x 15*
Spindle Bearings	*6006Z x 1 | 6006Z x 1* *32006 x 1 | 32005 x 1*
Pulley Bearings	*6908ZZ x 2*
Ball Screw Block Bearings	*7203 x 2*
Ball Screw Block Seals	*TC24-38-8 x 1 | TC20-40-8 x 1*
Front Cover Seals	*TC90-110-12 x 1*
Front Cover O'Rings	*G70 x 1 | G40(G48-HSK40) x 1*
Spindle Seals	*TC45-60-7 x 1*
Piston O'Rings	*P70 x 2*
Ball Screw Type	*Ø20 x 5 x C5*

*** Roundness ≤ 0.003 mm.*
**** All dimensions are given in millimeters.*

SFSD06-ER25
SFSD06-HSK40
SFSD06-JT6

Peso Total	37 Kg

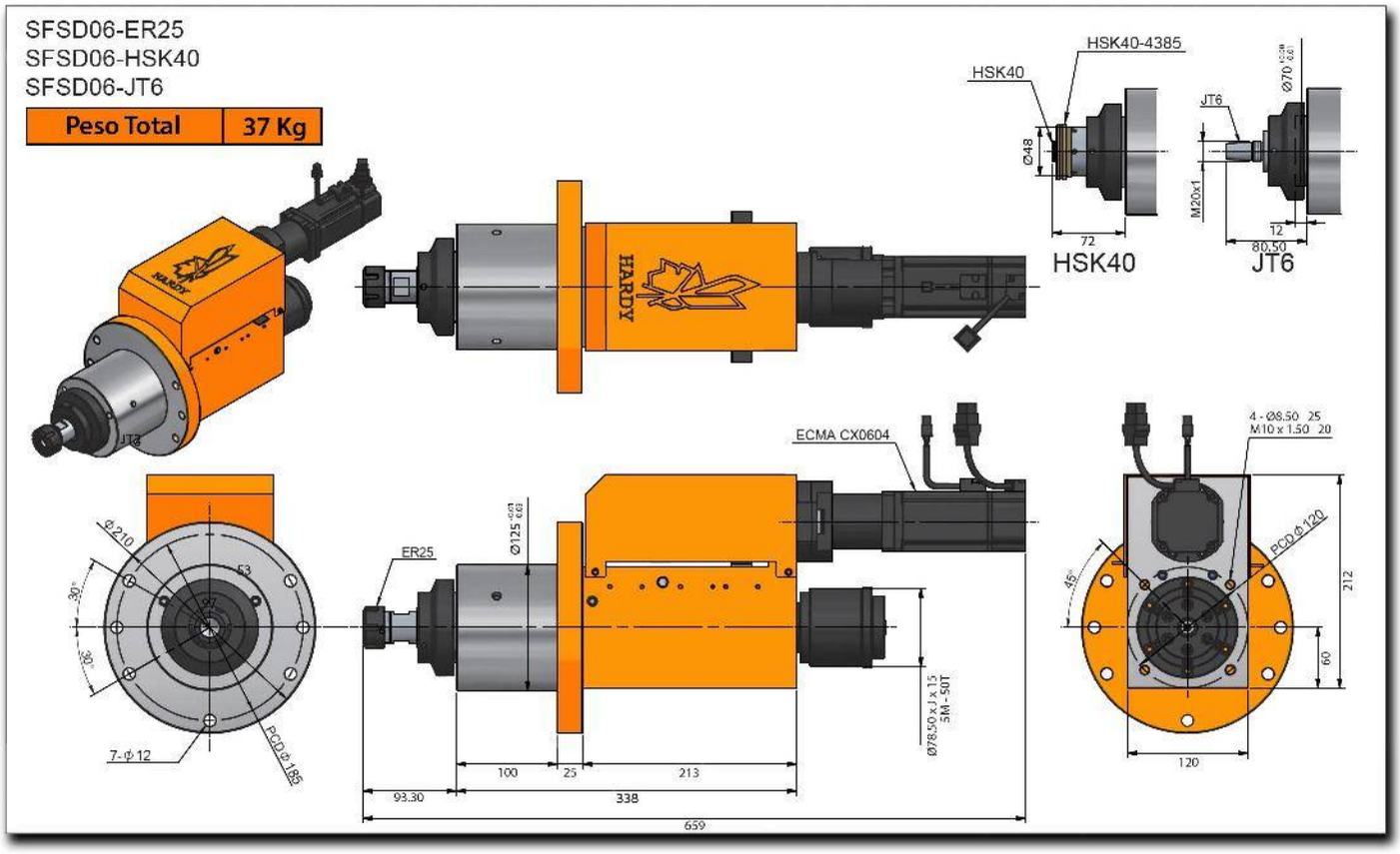

SFSD06-ER25-MB
SFSD06-HSK40-MB
SFSD06-JT6-MB

Peso Total	37 Kg

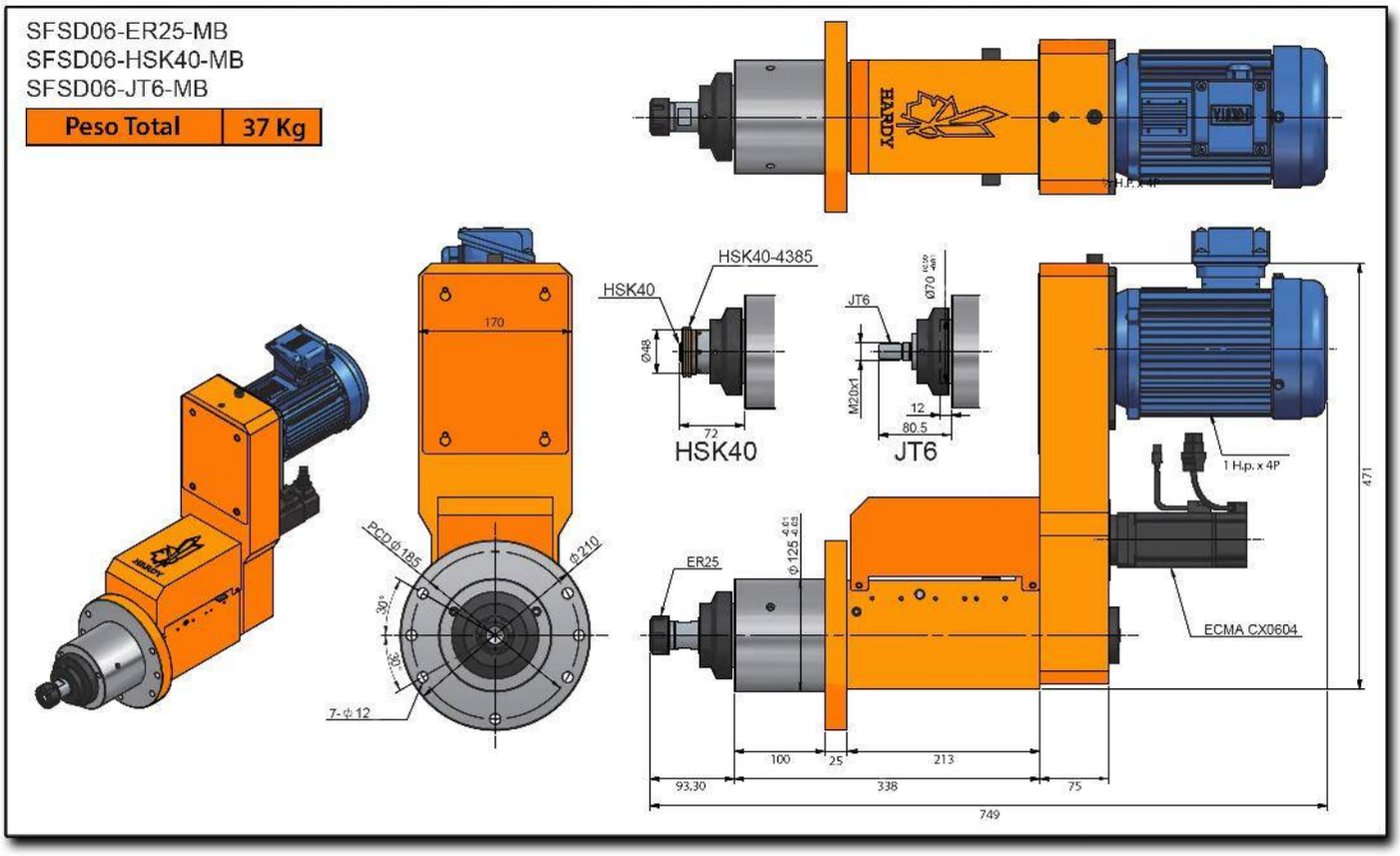

SFSD06H-100

High Performance Drilling/Tapping Servo Spindle Head Flange Type

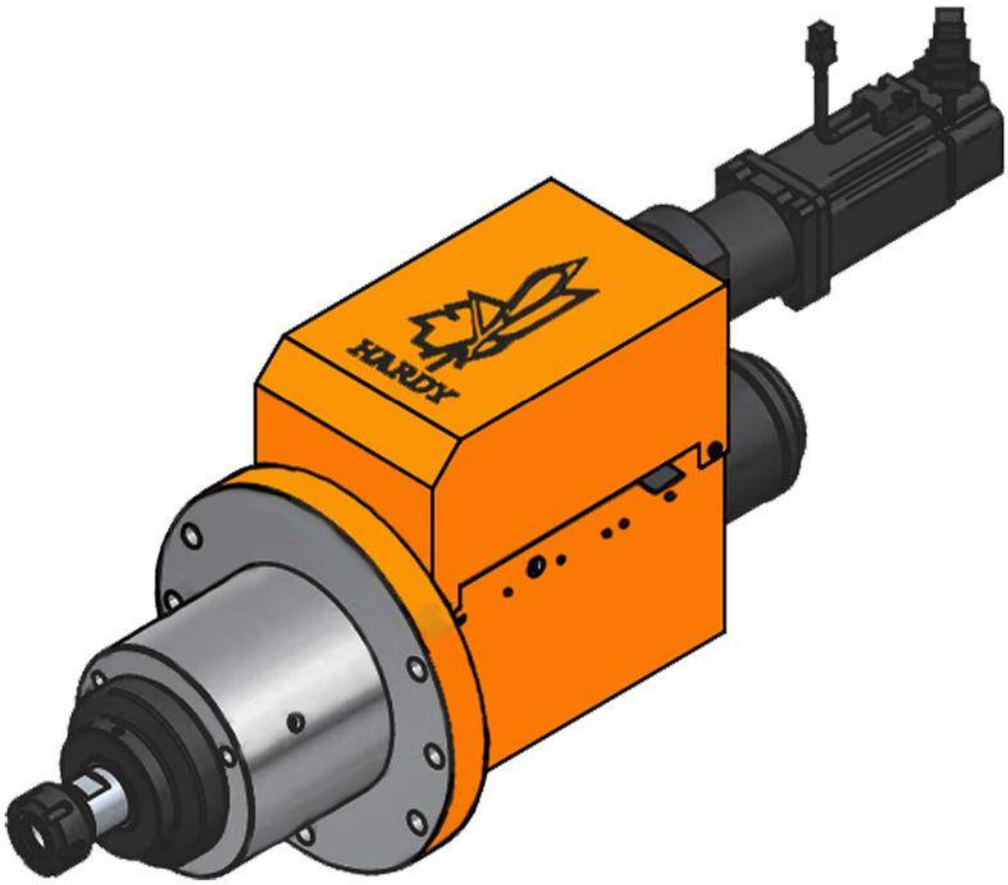

Characteristics & Dimensions

Model	SFSD06H-100M
Drilling Capacity (S45C)	*Ø 16*
Maximum Stroke	*100 mm.*
Maximum Speed (r.p.m.)	*10,000*
Electric Power Maximum Power	*1 H.p. x 4P*
Spindle Polley	*6908ZZ x 2*
Spindle Bearings	*7006 x 2* *7005 x 2*
Pulley Bearings	*6908ZZ x 2*
Ball Screw Block Bearings	*7203 x 2*
Ball Screw Block Seals	*TC24-38-8 x 1 1 TC20-40-8 x 1*
Front Cover Seals	*TC70-90-12 x 1*
Front Cover O'Rings	*G70 x 1 | G40 (G48-HSK40) x 1*
Spindle Seals	*TC45-60-7 x 1*
Piston O'Rings	*P70 x 2*
Ball Screw Type	*Ø20 x 5 x C5*

** Roundness ≤ 0.003 mm.
*** All dimensions are given in millimeters.

SFSD06H-ER25-MB
SFSD06H-HSK40-MB
SFSD06H-JT6-MB

Peso Total	37 Kg

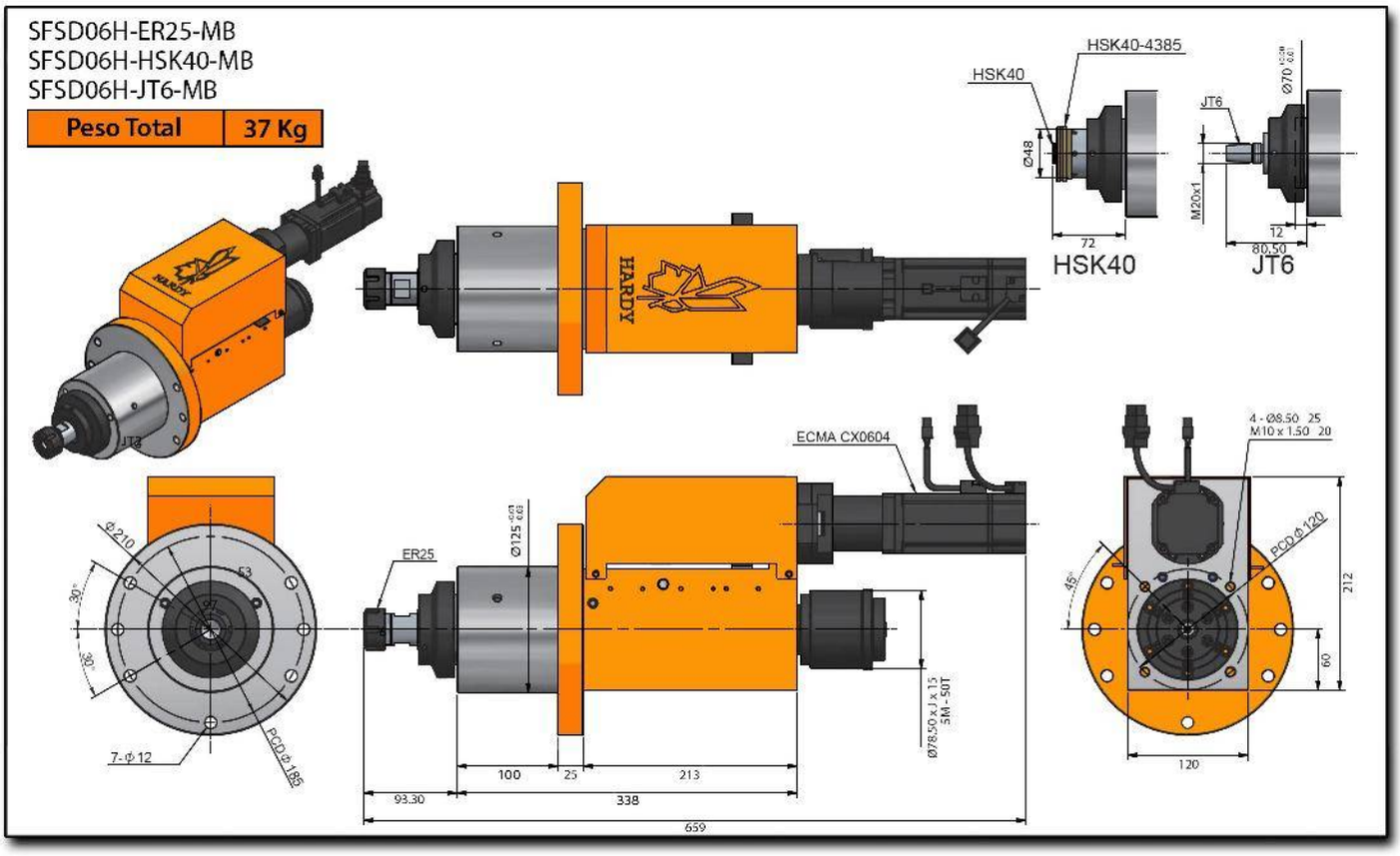

SFSD06H-ER25-MB
SFSD06H-HSK40-MB
SFSD06H-JT6-MB

Peso Total	37 Kg

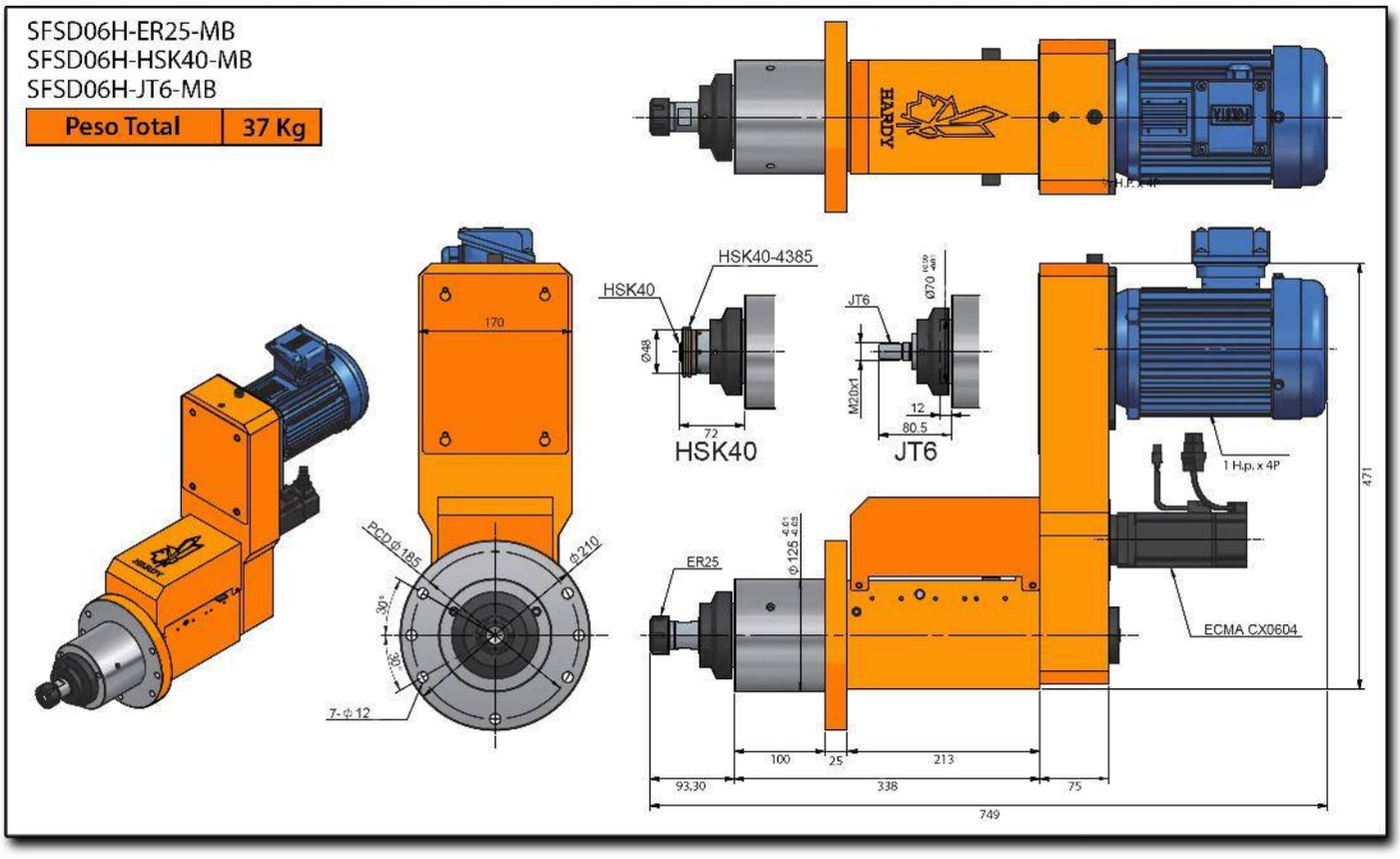

SFSD09-120

Drilling/Tapping Servo Spindle Head Flange Type

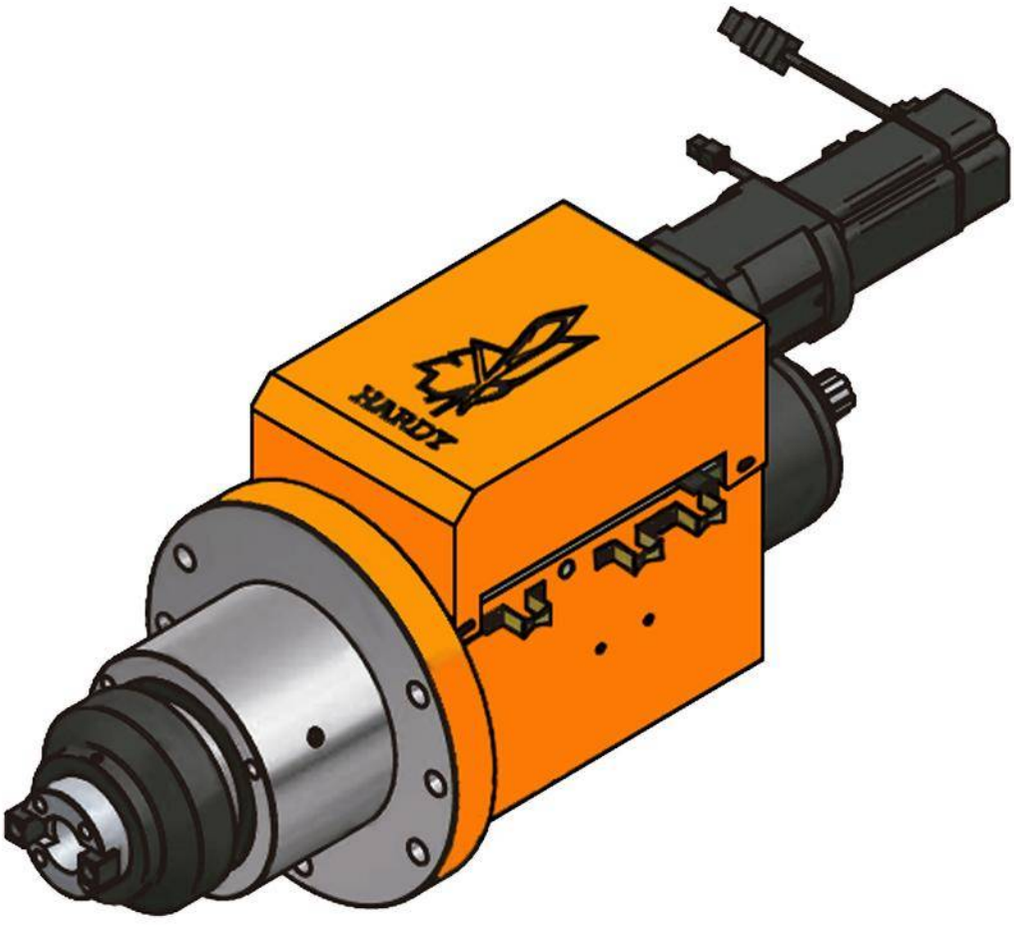

Characteristics & Dimensions

Modelo	SFSD09-120M
Drilling Capacity (S45C)	*Ø 25*
Maximum Stroke	*120 mm.*
Maximum Speed (r.p.m.)	*3,000*
Electric Power Maximum Power	*2 H.p. x 4P*
Spindle Polley	*5M - 66T | Ø102.30 x J x 20.00*
Spindle Bearings	*6007Z x 1 | 6006Z x 1* *32007 x 1 | 32006 x 1*
Pulley Bearings	*6010ZZ x 2*
Ball Screw Block Bearings	*7203 x 2*
Ball Screw Block Seals	*TC24-38-8 x 1 | TC20-40-8 x 1*
Front Cover Seals	*TC90-110-12 x 1*
Front Cover O'Rings	*G90 x 1 | G62 x*
Spindle Seals	*TC50-65-8 x 1*
Piston O'Rings	*P90 x 2*
Ball Screw Type	*Ø20 x 5 x C5*

*** Roundness ≤ 0.003 mm.*
**** All dimensions are given in millimeters.*

SFSD09-NT30
SFSD09-HSK50

Peso Total	83 Kg

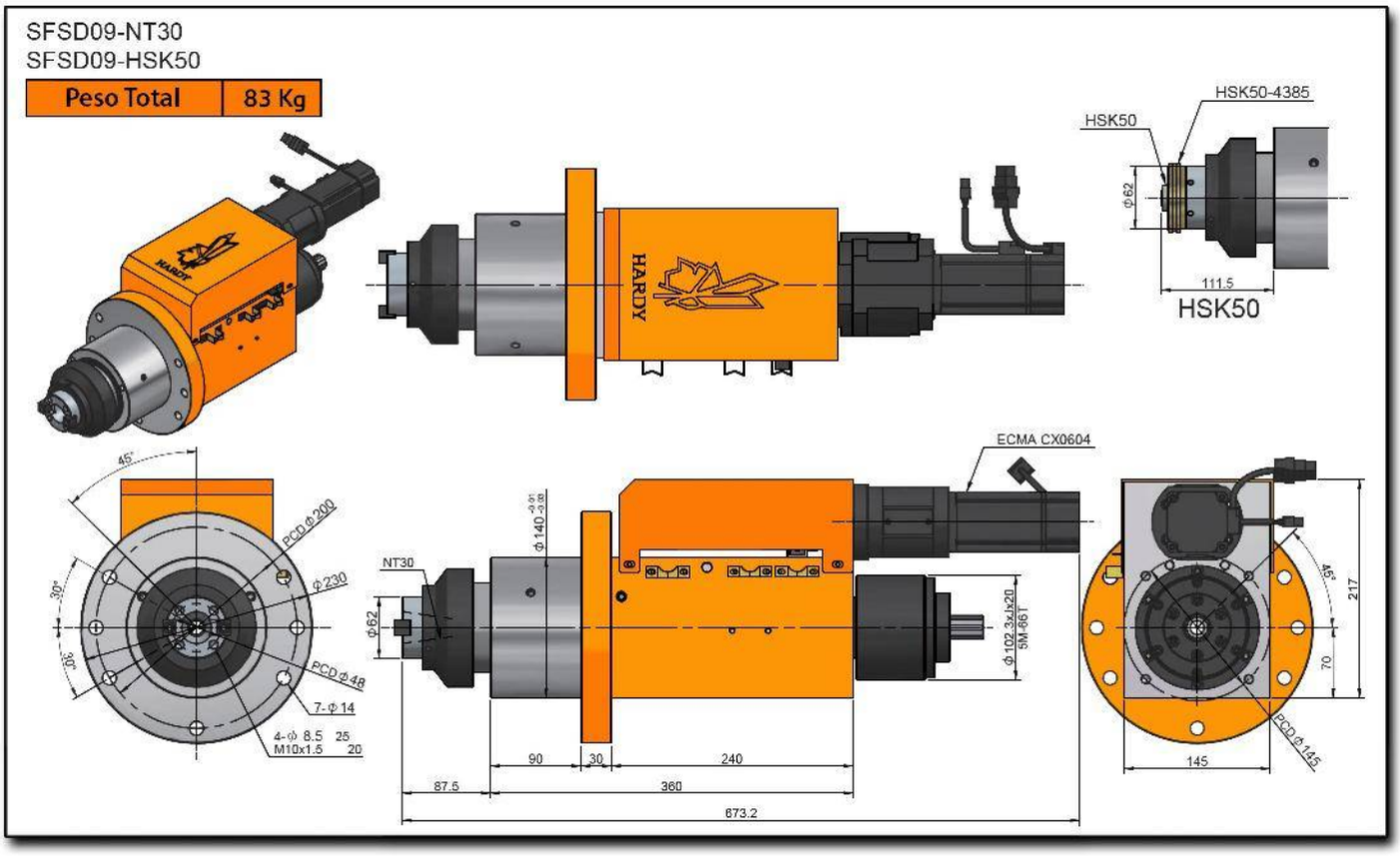

SFSD09-NT30-MB
SFSD09-HSK50-MB

Peso Total	83 Kg

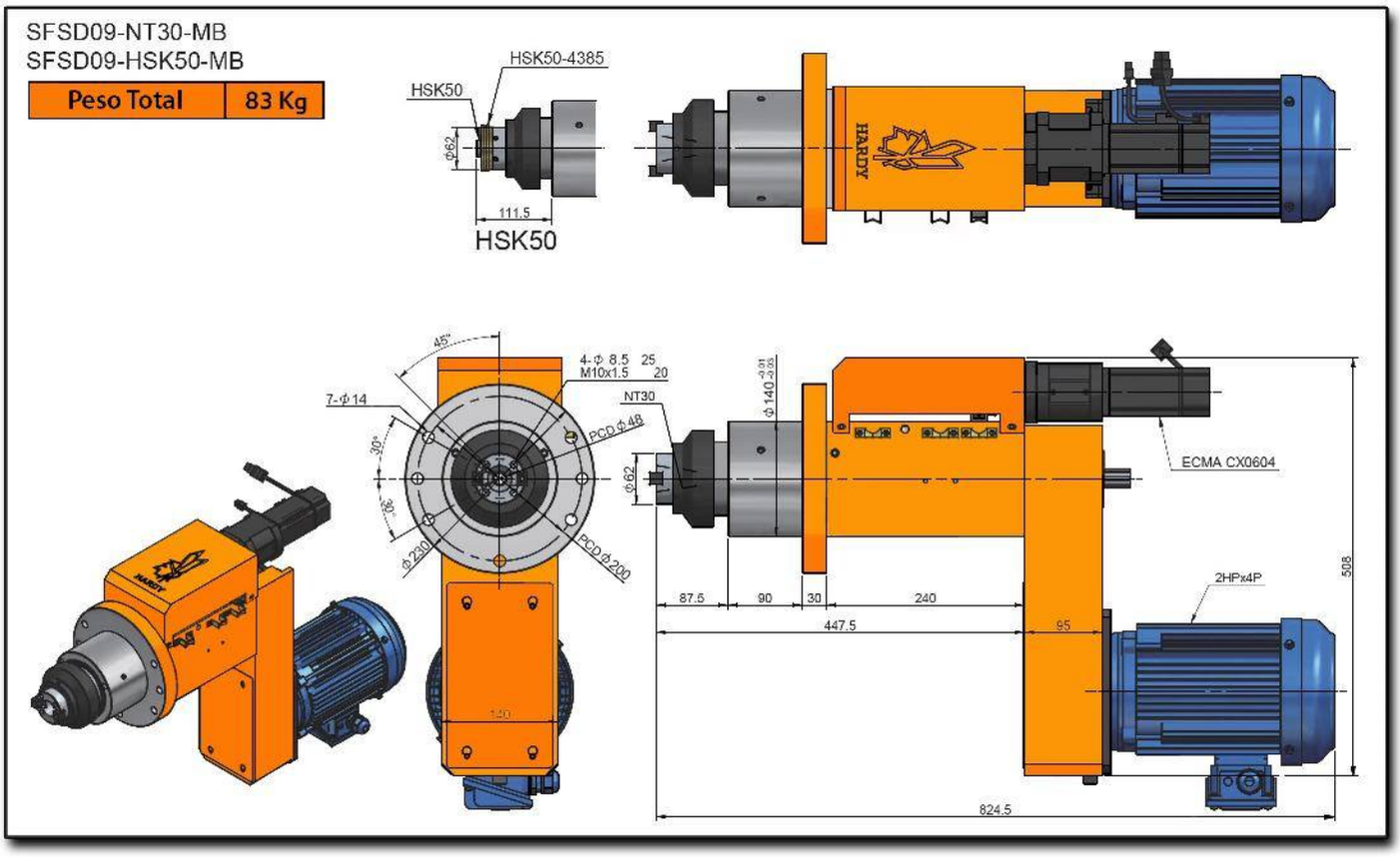

SFSD09H-120

High Performance Drilling/Tapping Servo Spindle Head Flange Type

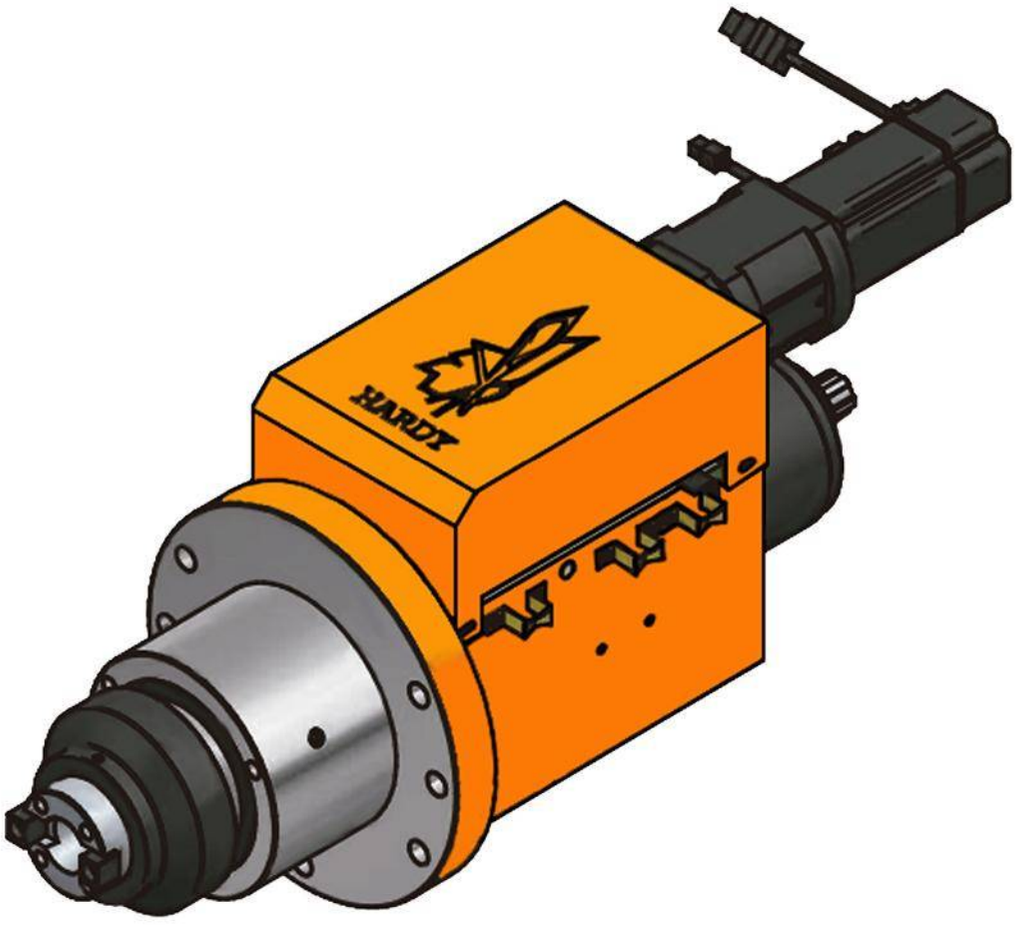

Characteristics & Dimensions

Modelo	SFSD09H-120M
Drilling Capacity (S45C)	*Ø 25*
Maximum Stroke	*120 mm.*
Maximum Speed (r.p.m.)	*8,000*
Electric Power Maximum Power	*2 H.p. x 4P*
Spindle Polley	*SM-66T* *Ø102.3 x 1 x 20*
Spindle Bearings	*7007 x 2* *7006 x 2*
Pulley Bearings	*6010ZZ x 2*
Ball Screw Block Bearings	*7203 x 2*
Ball Screw Block Seals	*TC24-38-8 x 1 | TC20-40-8 x 1*
Front Cover Seals	*TC90-110-12 x 1*
Front Cover O'Rings	*G90 x 1 | G62 x*
Spindle Seals	*TC50-65-8 x 1*
Piston O'Rings	*P90 x 2*
Ball Screw Type	*Ø20 x 5 x C5*

*** Roundness ≤ 0.003 mm.*
**** All dimensions are given in millimeters.*

SFSD09H-NT30
SFSD09H-HSK50

Peso Total	83 Kg

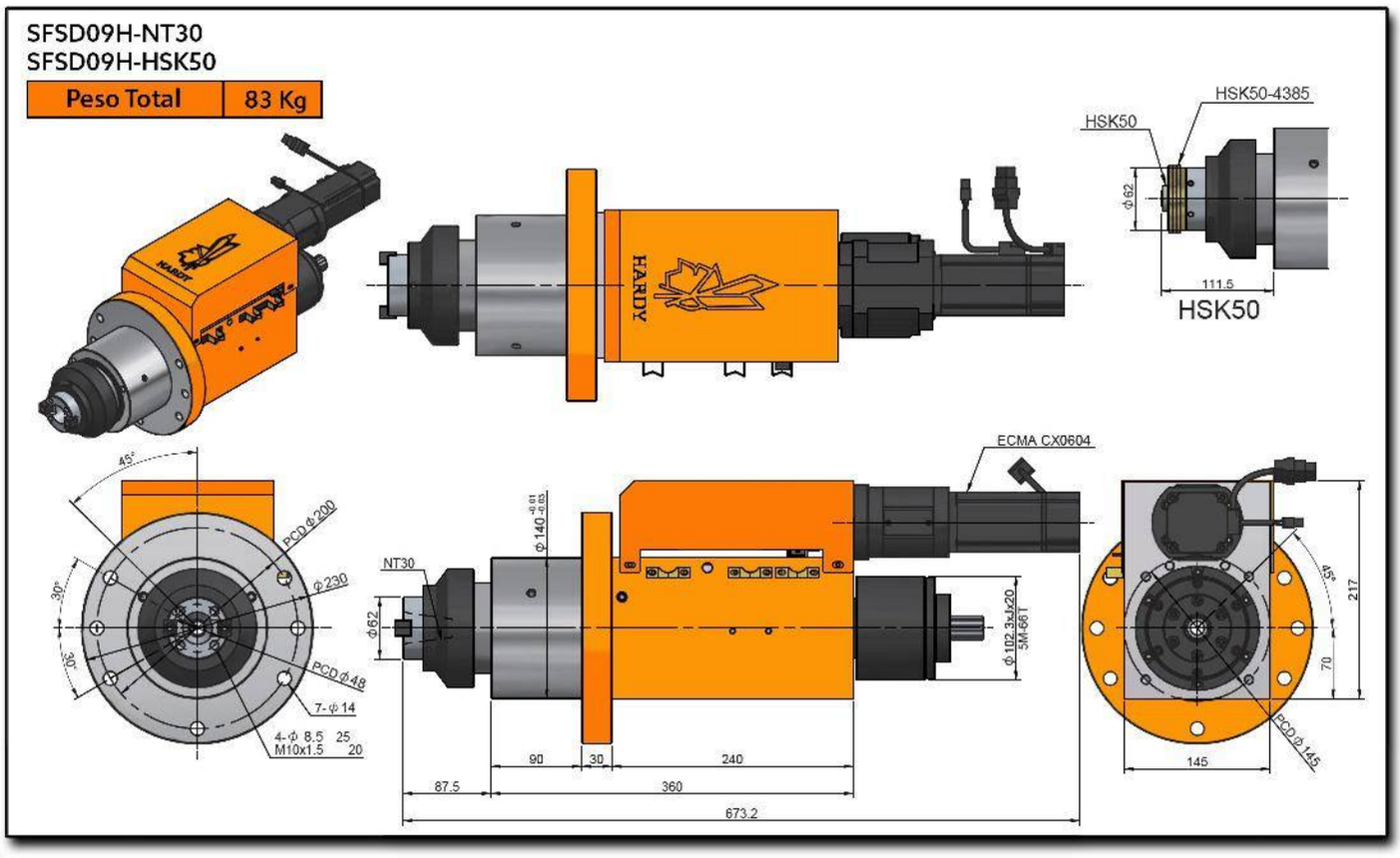

SFSD09H-NT30-MB
SFSD09H-HSK50-MB

Peso Total	83 Kg

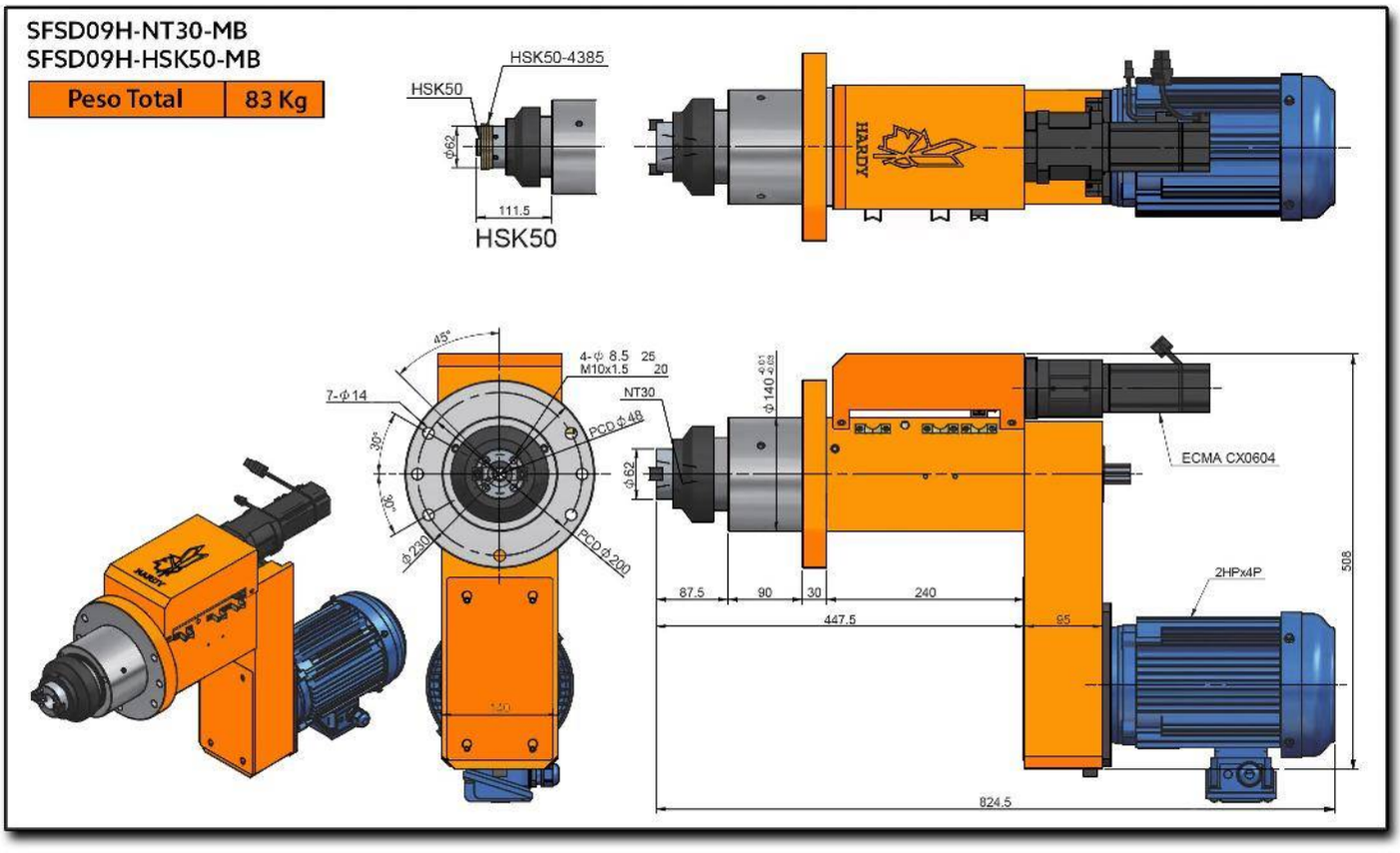

SFSD11-120

Drilling/Tapping Servo Spindle Head Flange Type

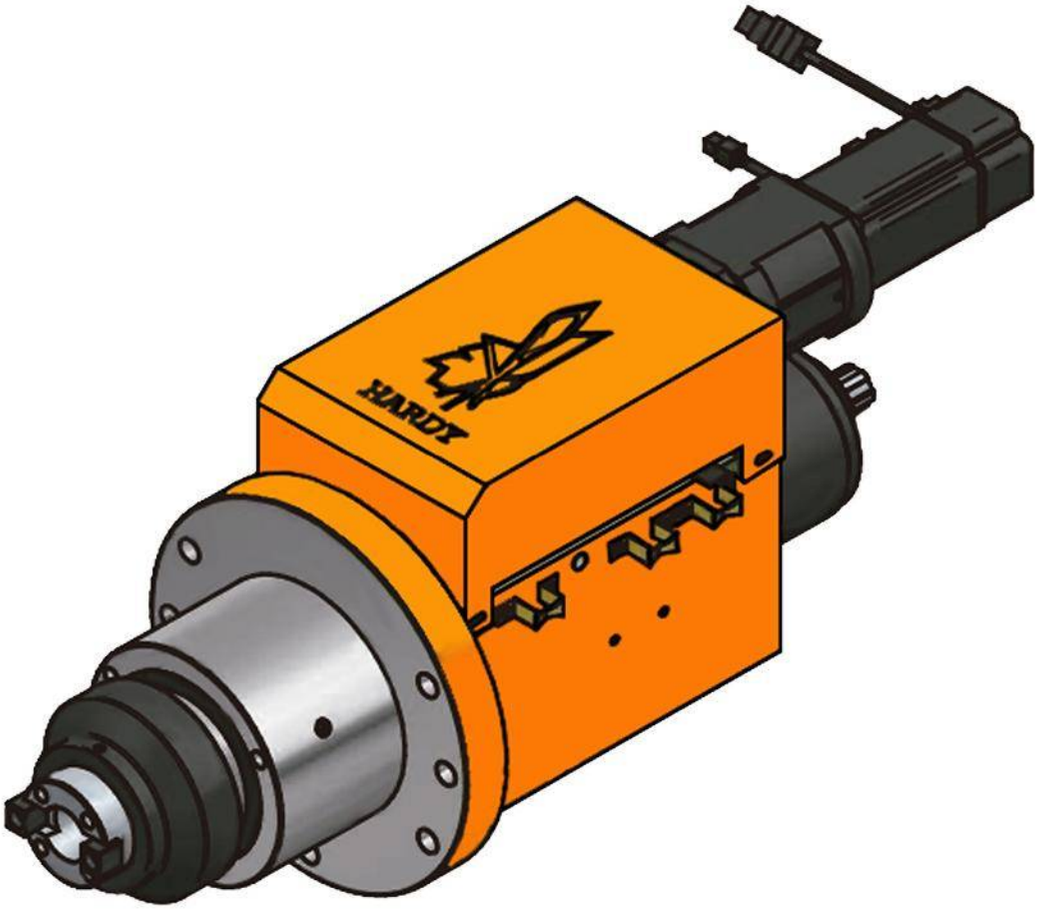

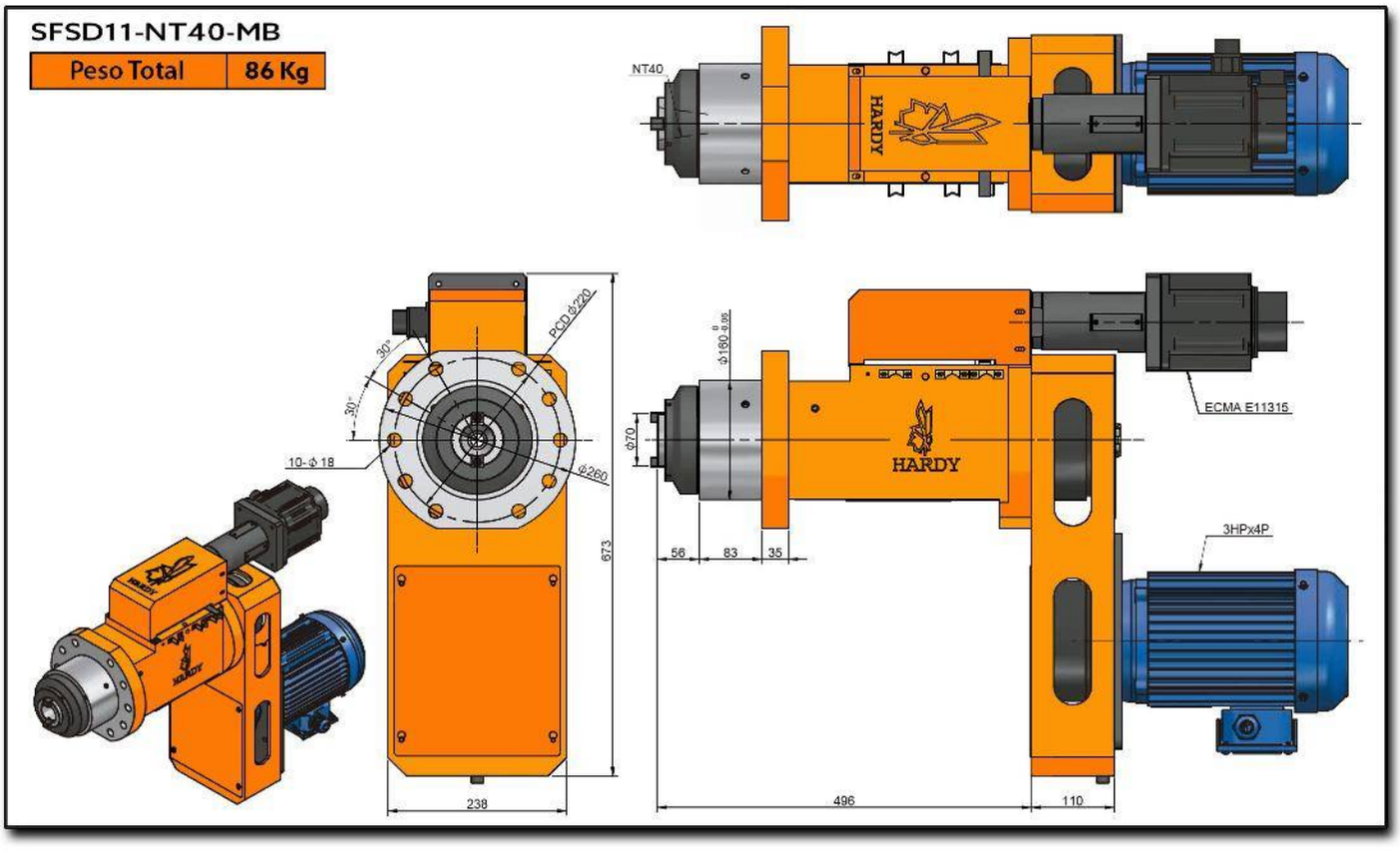
SFSD11-NT40-MB
Peso Total
86 Kg
NT40
HARDY
PCD ϕ220
30°
30°
10-ϕ 18
ϕ260
673
238
ϕ160 g6
ϕ70
ECMA E11315
HARDY
3HPx4P
56
83
35
496
110

Characteristics & Dimensions

Model	SFSD11-120M
Drilling Capacity (S45C)	*Ø 35*
Maximum Stroke	*120 mm.*
Maximum Speed (r.p.m.)	*1,800*
Electric Power Maximum Power	*3 H.p. x 4P*
Spindle Polley	*8M-64T*
Spindle Bearings	*6210ZZ x 2 | 30210 x 2*
Pulley Bearings	*6015ZZ x 2*
Ball Screw Block Bearings	*7203 x 2*
Ball Screw Block Seals	*TC24-40-8 x 1 | TC24-38-8 x 1*
Front Cover Seals	*TC110-130-13 x 1*
Front Cover O'Rings	*G85 x 1 | G110 x 1*
Spindle Seals	*TC70-90-12 x 1*
Piston O'Rings	*P110 x 2*
Ball Screw Type	*Ø25 x 5 x C5*

** Roundness ≤ 0.003 mm.
*** All dimensions are given in millimeters.

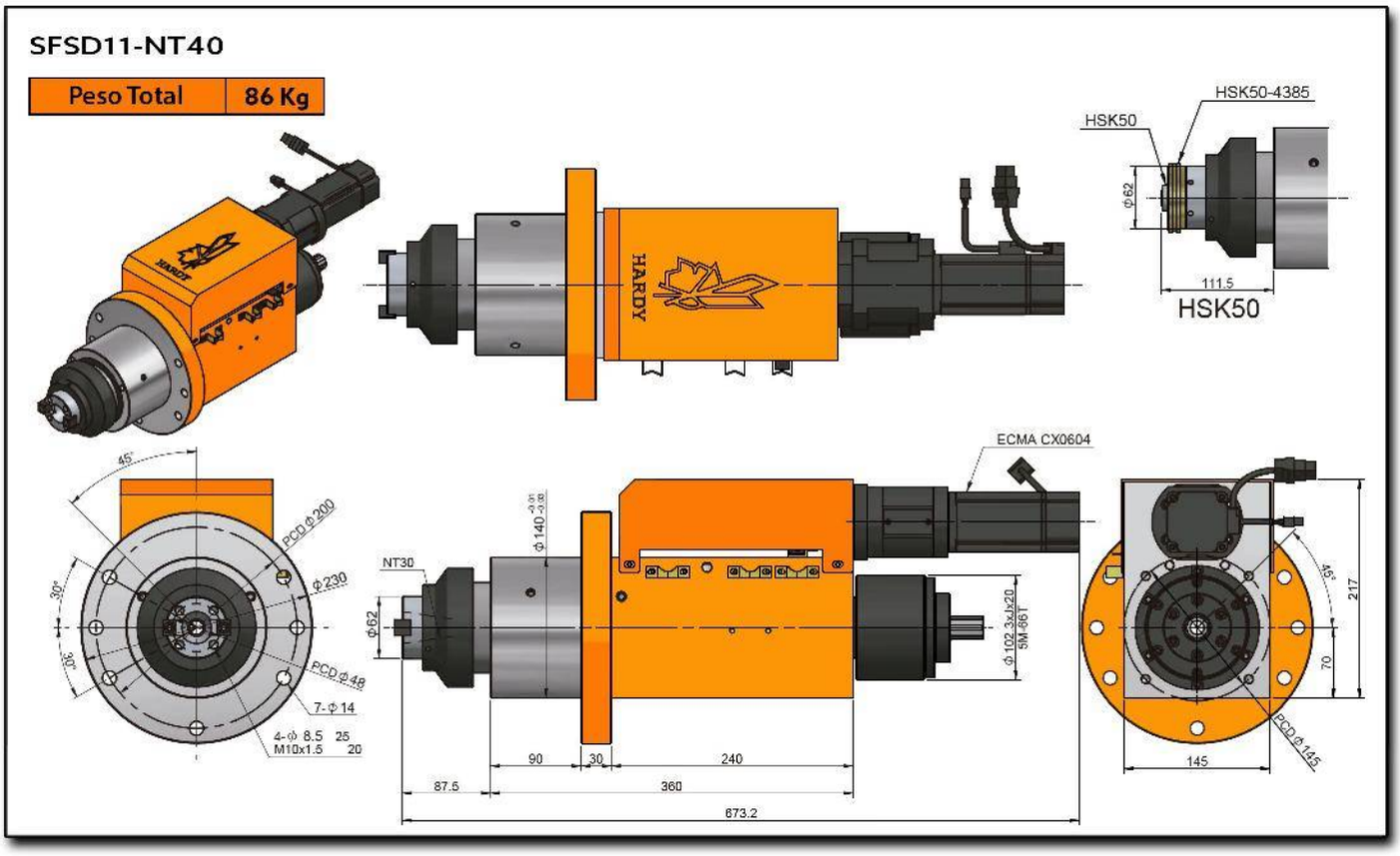
SFSD11-NT40
Peso Total
86 Kg
HSK50-4385
HSK50
HSK50
HARDY
ECMA CX0604
NT30
45°
30°
30°
PCD ϕ200
ϕ230
PCD ϕ48
7-ϕ14
4-ϕ 8.5
M10x1.5
25
20
ϕ140 -0.05 -0.08
ϕ62
ϕ102.3xJs20
5M-66T
90
30
240
87.5
360
673.2
145
PCD ϕ145
70
217
45°

SFSD11H-120

High Performance Drilling/Tapping Servo Spindle Head Flange Type

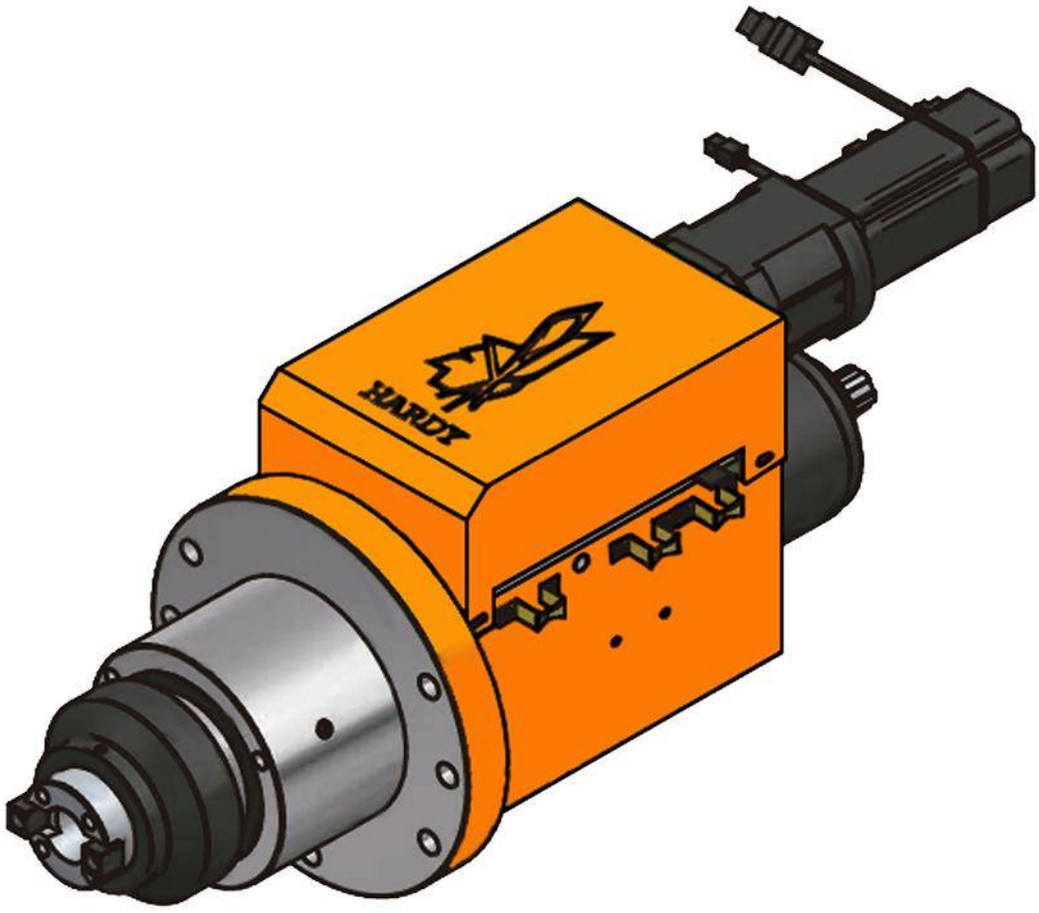

Characteristics & Dimensions

Model	SFSD11H-120M
Drilling Capacity (S45C)	*Ø 35*
Maximum Stroke	*120 mm.*
Maximum Speed (r.p.m.)	*4,000*
Electric Power Maximum Power	*3 H.p. x 4P*
Spindle Polley	*8M-64T*
Spindle Bearings	*7210 x 4*
Pulley Bearings	*6015ZZ x 2*
Ball Screw Block Bearings	*7203 x 2*
Ball Screw Block Seals	*TC24-40-8 x 1 | TC24-38-8 x 1*
Front Cover Seals	*TC110-130-13 x 1*
Front Cover O'Rings	*G85 x 1 | G110 x 1*
Spindle Seals	*TC70-90-12 x 1*
Piston O'Rings	*P110 x 2*
Ball Screw Type	*Ø25 x 5 x C5*

** Roundness ≤ 0.003 mm.
*** All dimensions are given in millimeters.

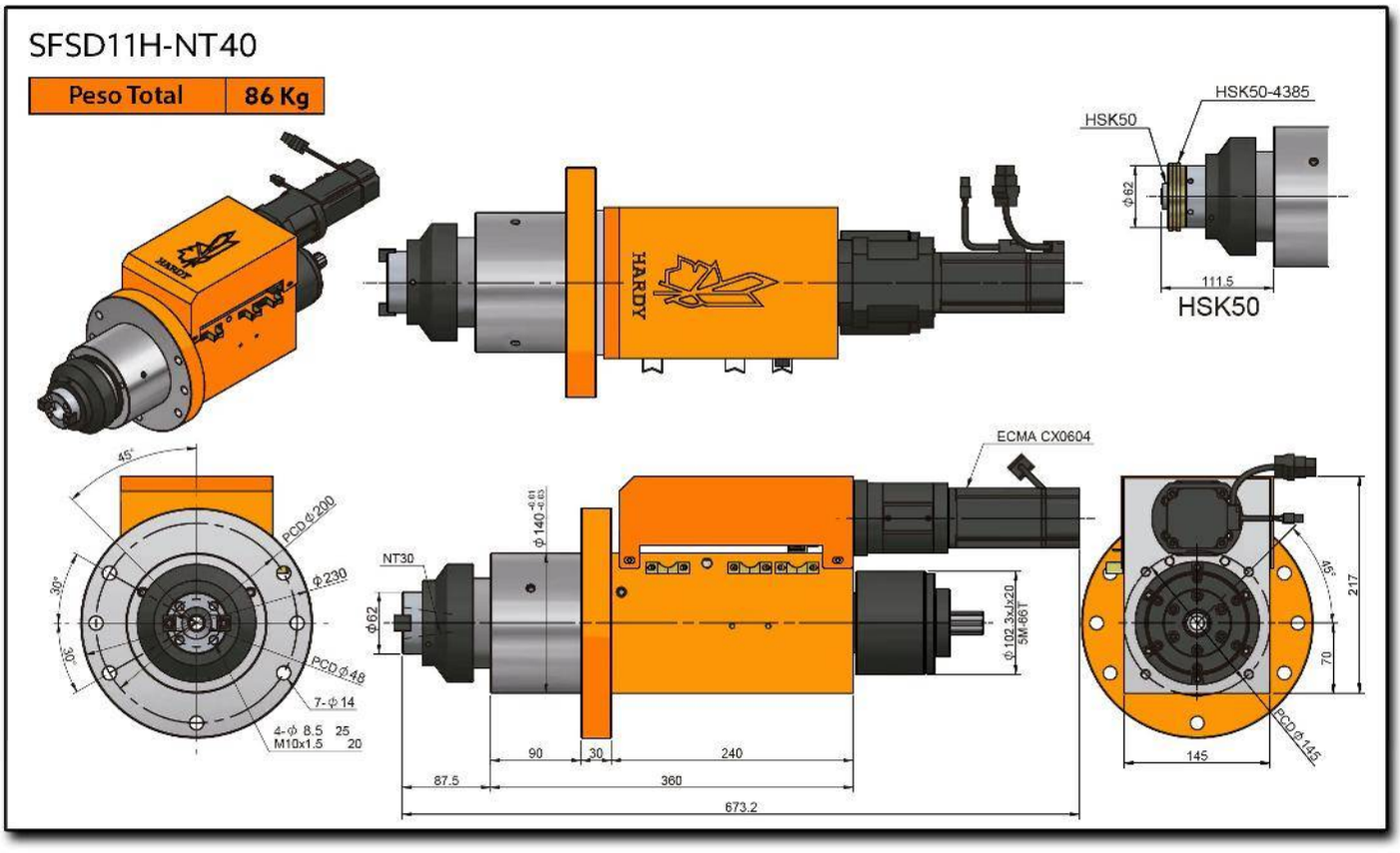
SFSD11H-NT40
Peso Total
86 Kg
HSK50
HSK50-4385
HSK50
ECMA CX0604
NT30
PCD ϕ200
ϕ230
PCD ϕ48
7-ϕ14
4-ϕ 8.5 25
M10x1.5 20
90
30
240
87.5
360
673.2
145
PCD ϕ145
217
70

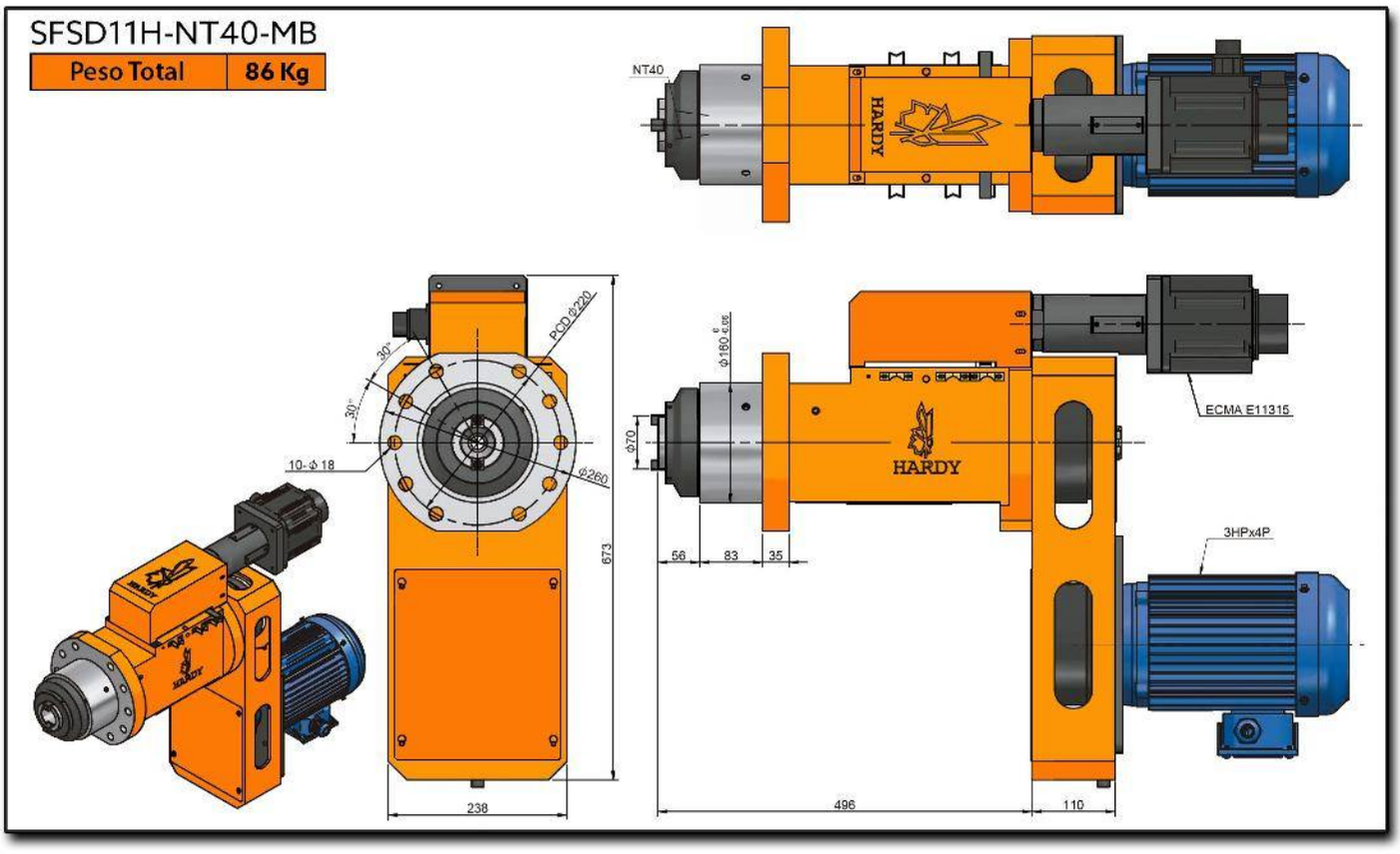
SFSD11H-NT40-MB
Peso Total
86 Kg
NT40
HARDY
PCD Ø220
30°
30°
10-Φ 18
Ø260
673
238
Φ70
Φ160 g6
ECMA E11315
HARDY
56
83
35
3HPx4P
496
110

SFSD12-150

Drilling/Tapping Servo Spindle Head Flange Type

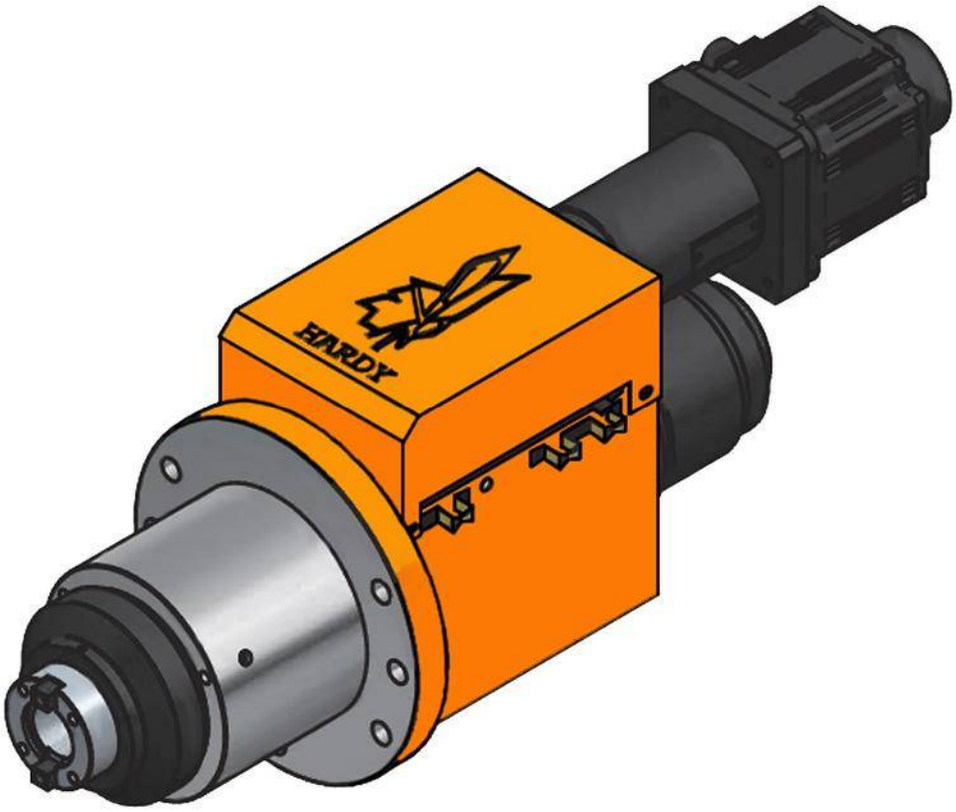

Characteristics & Dimensions

Model	SFSD12-150M
Drilling Capacity (S45C)	*Ø 35*
Maximum Stroke	*150 mm.*
Maximum Speed (r.p.m.)	*2,000*
Electric Power Maximum Power	*3 H.p. x 4P*
Spindle Polley	*8M-54T | Ø133.6 x J x 25*
Spindle Bearings	*6011Z x 1 | 6009Z x 1* *32011 x 1 | 32009 x 1*
Pulley Bearings	*6211ZZ x 2*
Ball Screw Block Bearings	*7204 x 2*
Ball Screw Block Seals	*TC26-42-8 x 1 | TC24-42-8 x 1*
Front Cover Seals	*TC120-145-12 x 1*
Front Cover O'Rings	*G120 x 1 | G85 x 1*
Spindle Seals	*TC75-90-12 x 1*
Piston O'Rings	*P120 x 2*
Ball Screw Type	*Ø25 x 5 x C5*

** Roundness ≤ 0.003 mm.
*** All dimensions are given in millimeters.

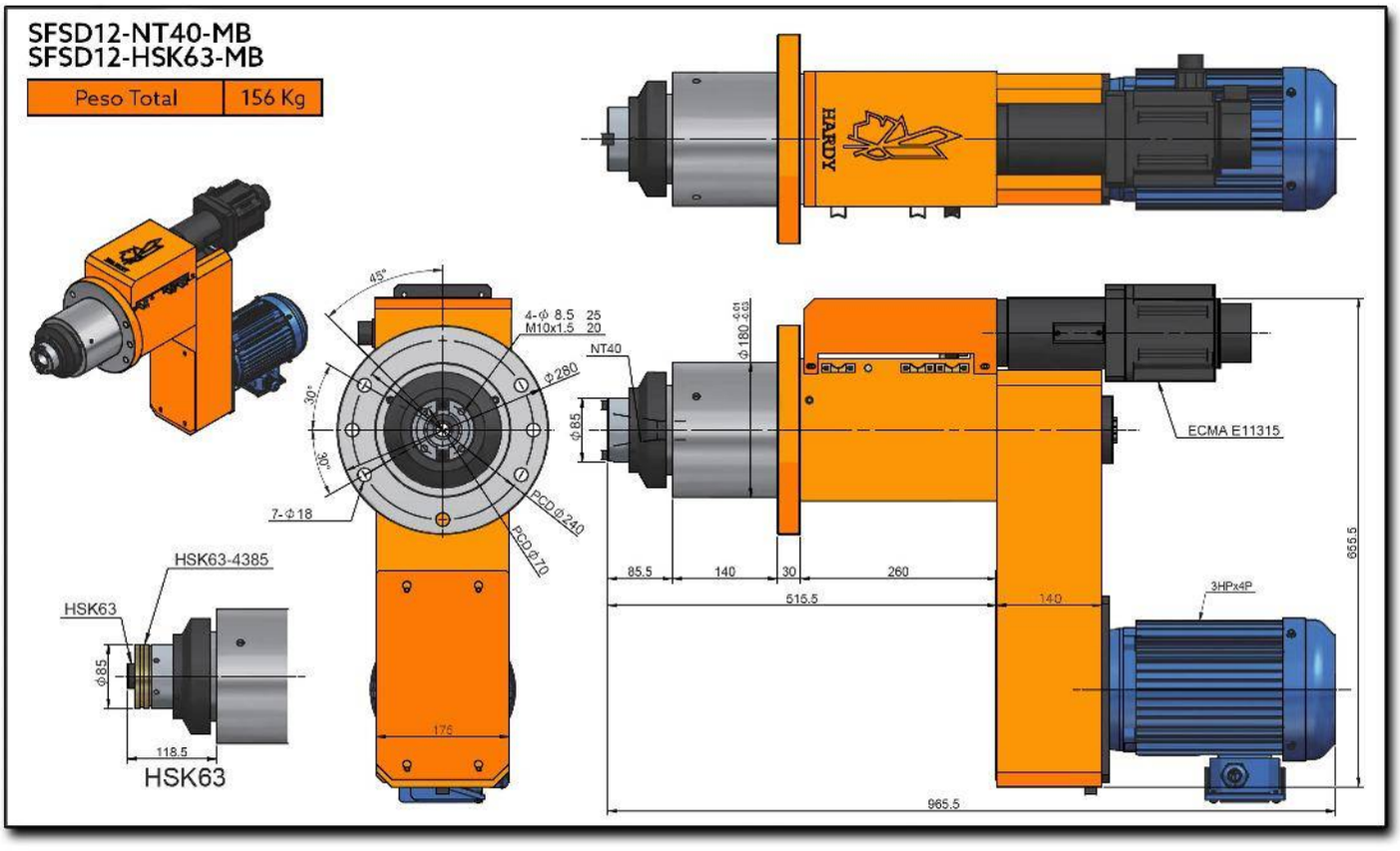
SFSD12-NT40-MB
SFSD12-HSK63-MB
Peso Total
156 Kg
HARDY
45°
30°
30°
4-Φ 8.5 25
M10x1.5 20
NT40
Φ280
7-Φ18
PCD Φ240
PCD Φ70
Φ180 -0.01 -0.03
Φ85
ECMA E11315
85.5
140
30
260
515.5
140
655.5
3HPx4P
965.5
HSK63-4385
HSK63
Φ85
118.5
HSK63
175

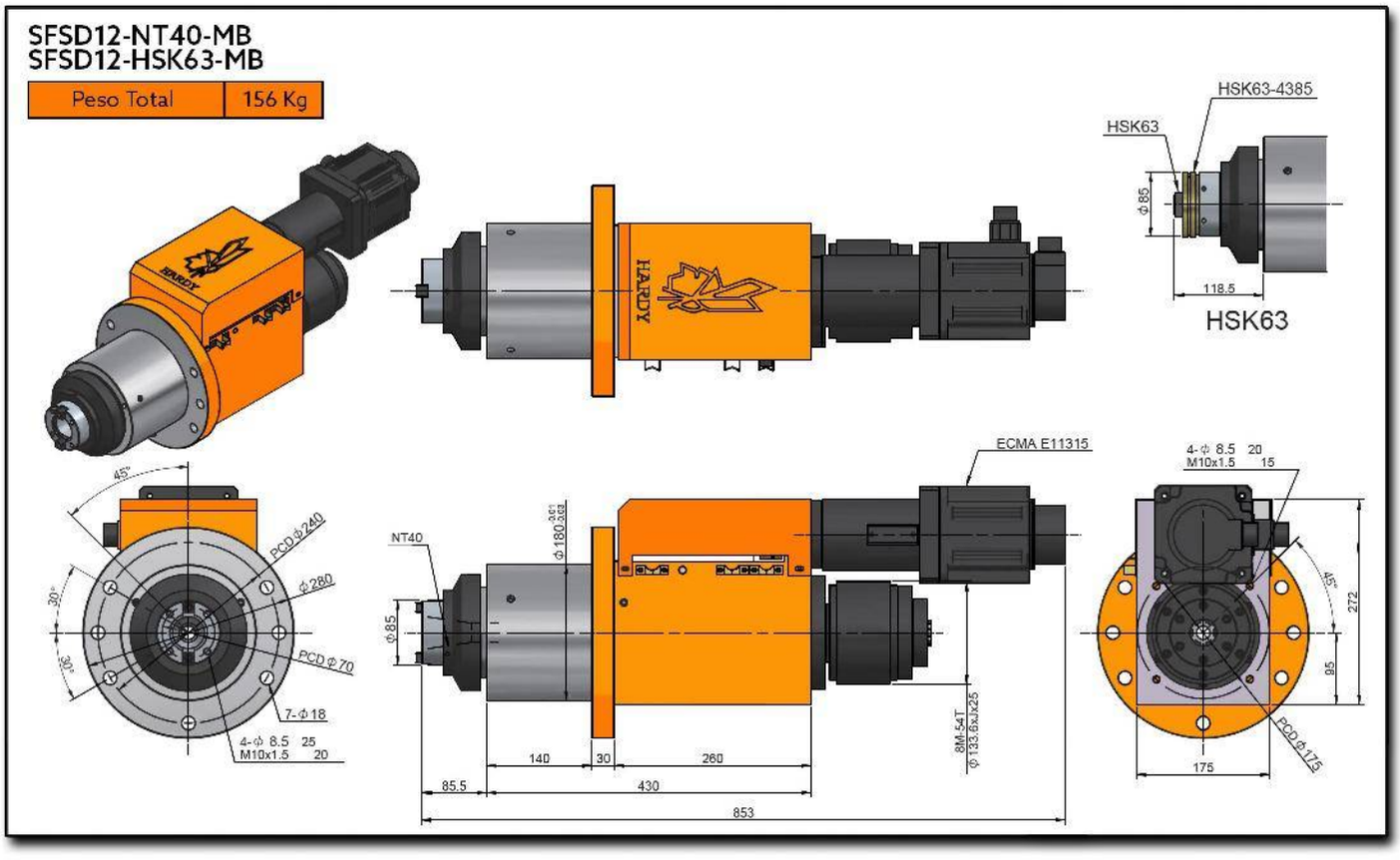
SFSD12-NT40-MB
SFSD12-HSK63-MB
Peso Total
156 Kg
HSK63-4385
HSK63
ϕ85
118.5
HSK63
45°
PCD ϕ240
ϕ280
30°
30°
PCD ϕ70
7-ϕ18
4-ϕ 8.5 25
M10x1.5 20
ECMA E11315
NT40
ϕ180 +0.01 -0.03
ϕ85
140
30
260
85.5
430
853
8M-54T
ϕ133.6xJx25
4-ϕ 8.5 20
M10x1.5 15
45°
272
95
175
PCD ϕ175

SFSD12H-150

High Performance Drilling/Tapping Servo Spindle Head Flange Type

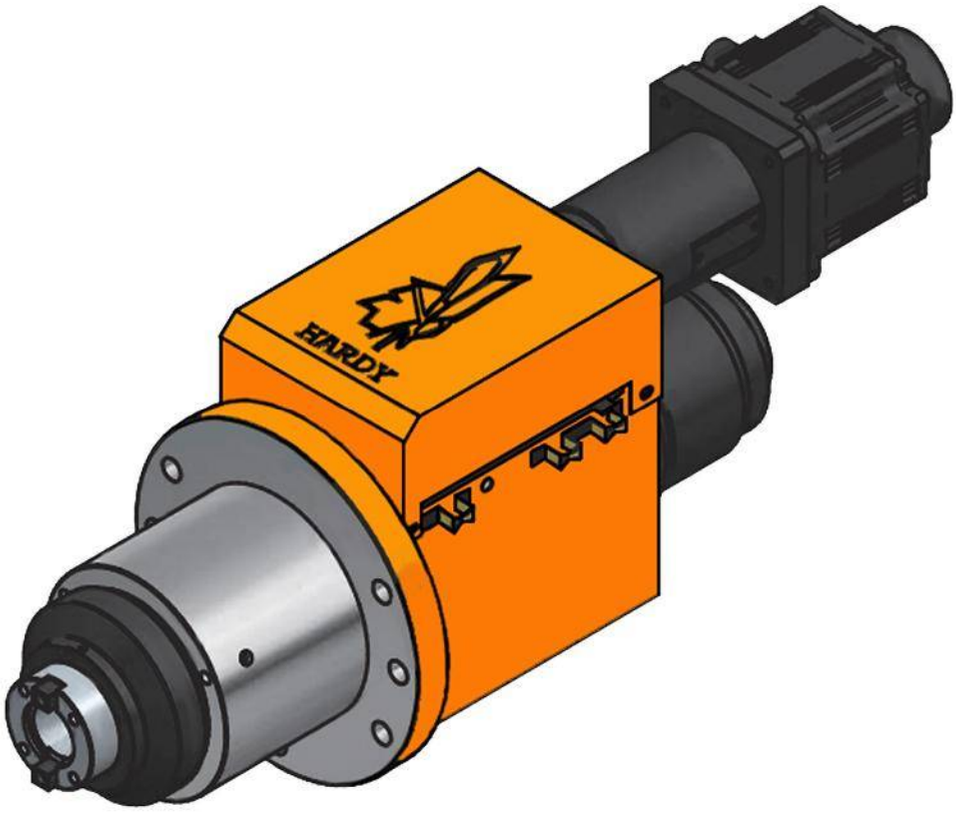

Characteristics & Dimensions

Model	SFSD12H-150M
Drilling Capacity (S45C)	*Ø 35*
Maximum Stroke	*150 mm.*
Maximum Speed (r.p.m.)	*6,000*
Electric Power Maximum Power	*3 H.p. x 4P*
Spindle Polley	*8M-54T | Ø133.6 x J x 25*
Spindle Bearings	*7011 x 2* *7009 x 2*
Pulley Bearings	*6211ZZ x 2*
Ball Screw Block Bearings	*7204 x 2*
Ball Screw Block Seals	*TC26-42-8 x 1 | TC24-42-8 x 1*
Front Cover Seals	*TC120-145-12 x 1*
Front Cover O'Rings	*G120 x 1 | G85 x 1*
Spindle Seals	*TC75-90-12 x 1*
Piston O'Rings	*P120 x 2*
Ball Screw Type	*Ø25 x 5 x C5*

** Roundness ≤ 0.003 mm.
*** All dimensions are given in millimeters.

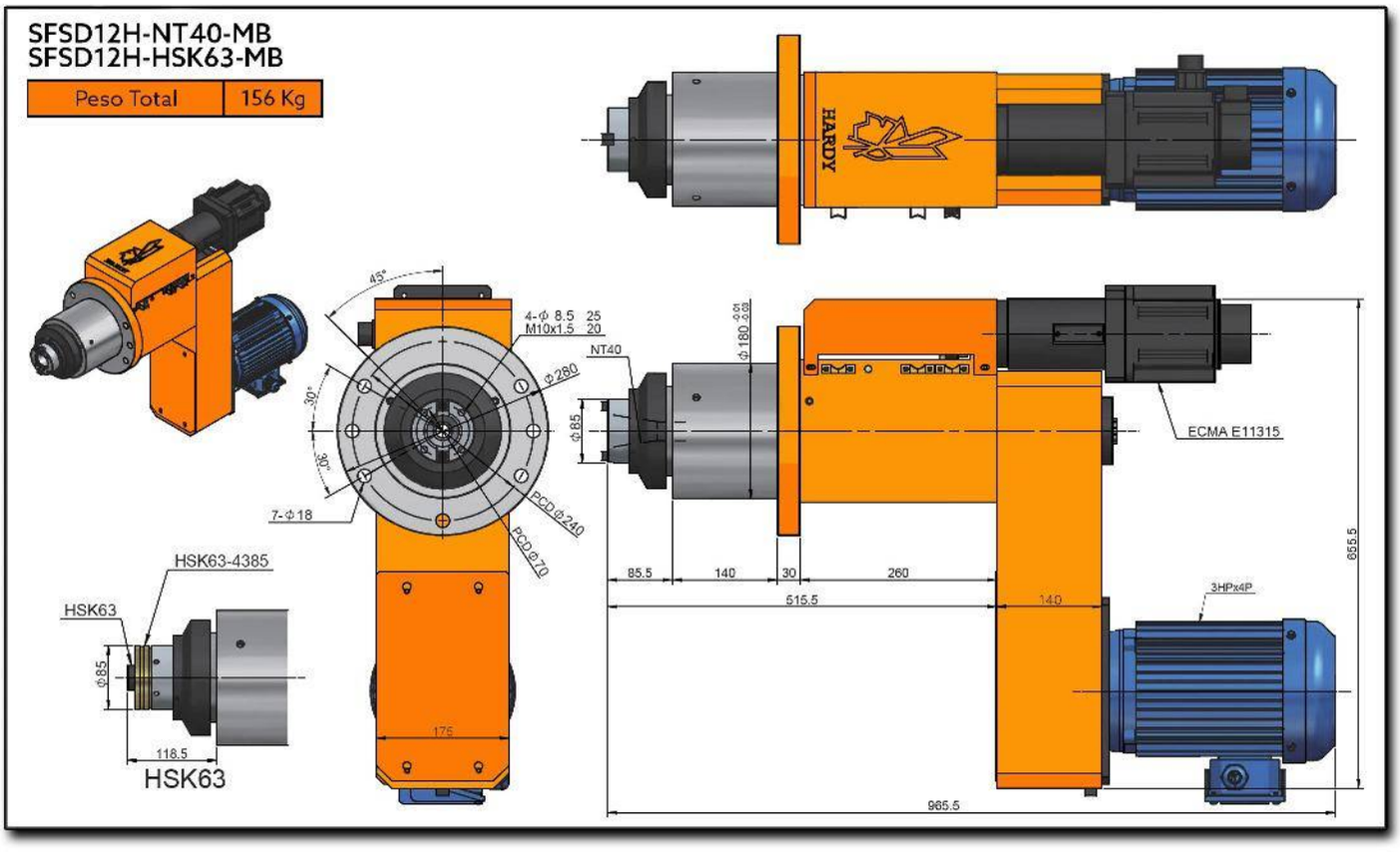
SFSD12H-NT40-MB
SFSD12H-HSK63-MB
Peso Total
156 Kg
HARDY
45°
30°
30°
4-Φ 8.5 25
M10x1.5 20
NT40
Φ280
7-Φ18
PCD Φ240
PCD Φ70
Φ180 -0.01 -0.03
Φ85
ECMA E11315
85.5
140
30
260
515.5
140
655.5
3HPx4P
965.5
HSK63-4385
HSK63
Φ85
118.5
HSK63
175

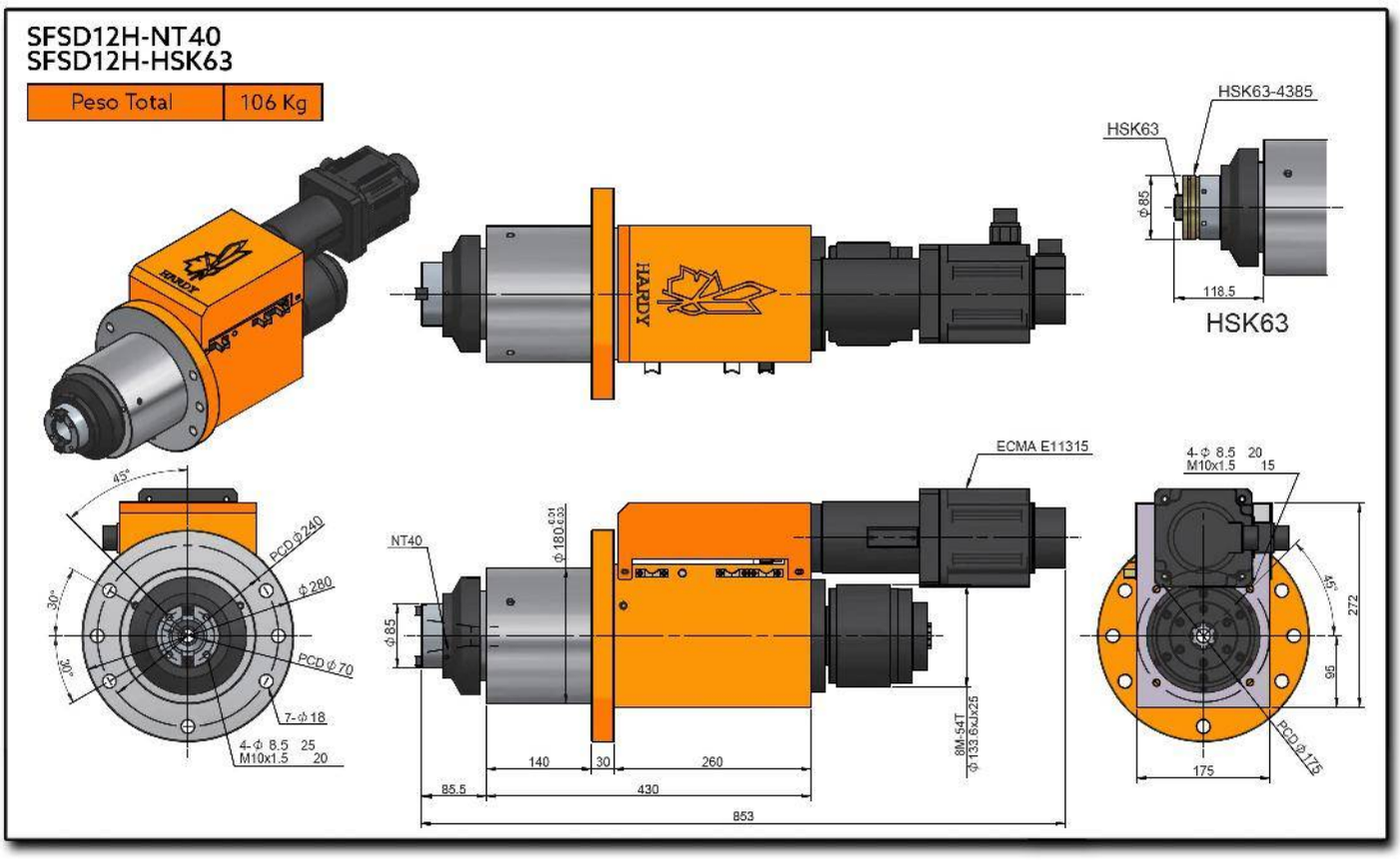
SFSD12H-NT40
SFSD12H-HSK63
Peso Total
106 Kg
HSK63-4385
HSK63
Φ85
118.5
HSK63
HARDY
45°
30°
30°
PCD Φ240
Φ280
PCD Φ70
7-Φ18
4-Φ 8.5 25
M10x1.5 20
NT40
Φ180 +0.21 +0.33
Φ85
ECMA E11315
8M-54T
Φ133.6xJx25
140
30
260
85.5
430
853
4-Φ 8.5 20
M10x1.5 15
45°
272
95
175
PCD Φ175

SFSD15-150

Drilling/Tapping Servo Spindle Head Flange Type

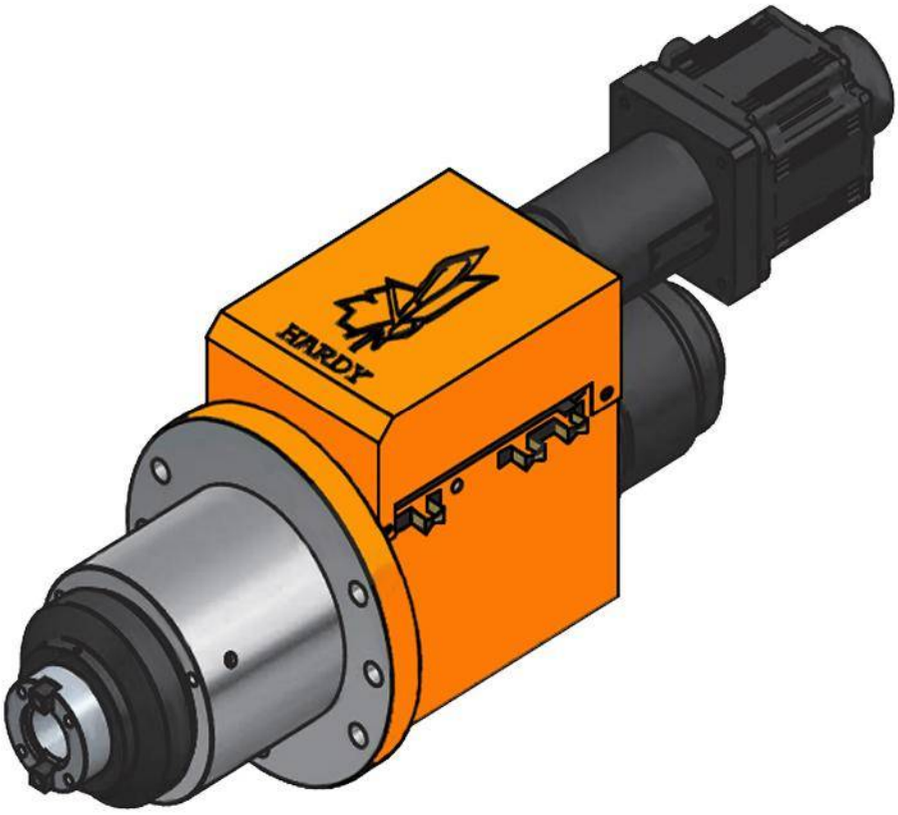

Characteristics & Dimensions

Model	SFSD15-150M
Drilling Capacity (S45C)	*Ø50*
Maximum Stroke	*150 mm.*
Maximum Speed (r.p.m.)	*1,600*
Electric Power Maximum Power	*5 H.p. x 4P*
Spindle Polley	*8M-62T | Ø156.5 x J x 25*
Spindle Bearings	*6014Z x 1 | 6012Z x 1* *32014 x 1 |32012 x 1*
Pulley Bearings	*6213ZZ x 2*
Ball Screw Block Bearings	*7205 x 2*
Ball Screw Block Seals	*TC30-50-10 x 2*
Front Cover Seals	*TC150-180-14 x 1*
Front Cover O'Rings	*G120 x 1 / G150 x 1*
Spindle Seals	*TC90-110-12 x 1*
Piston O'Rings	*P150 x 2*
Ball Screw Type	*Ø32 x 5 x C5*

** Roundness ≤ 0.003 mm.
*** All dimensions are given in millimeters.

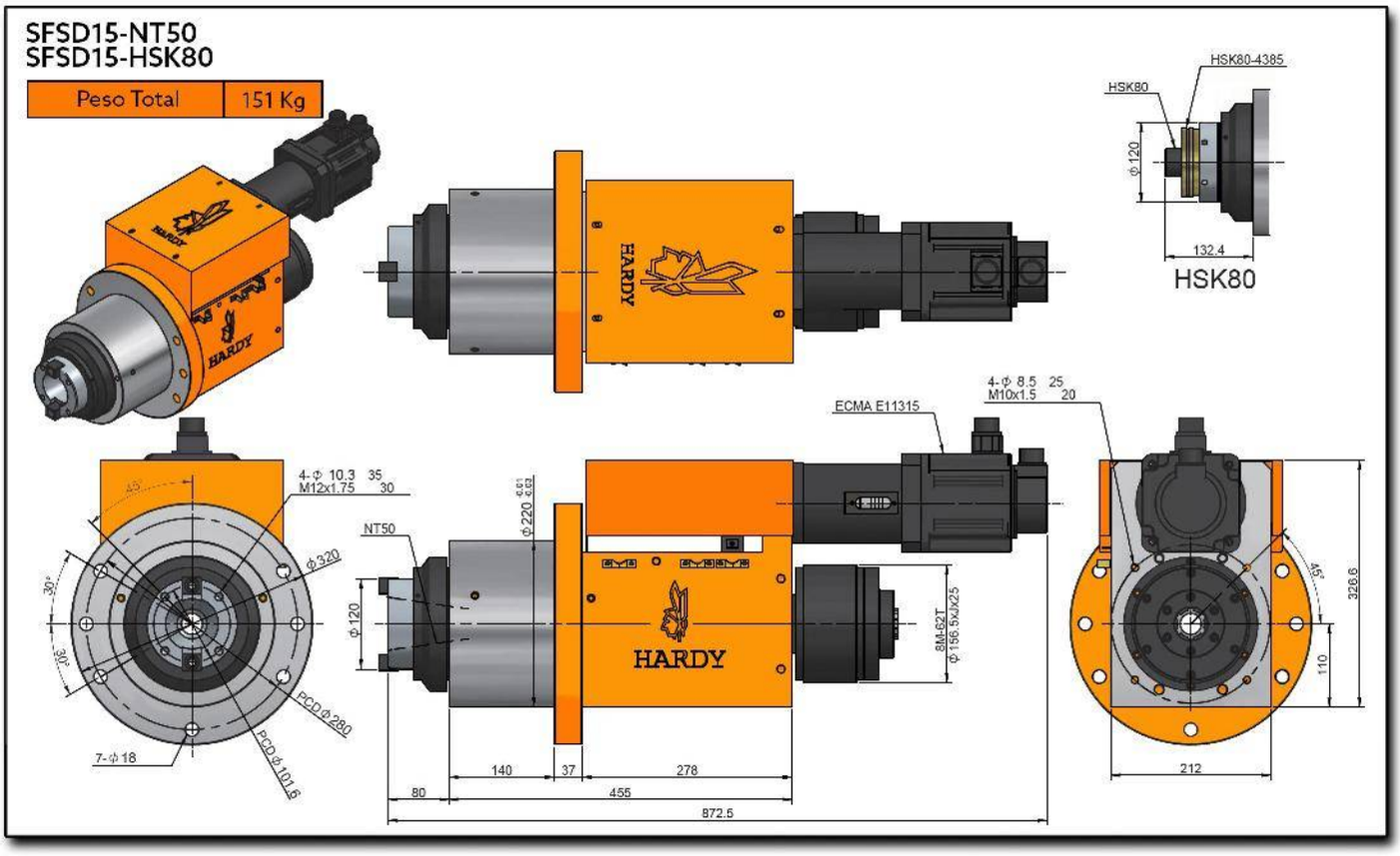
SFSD15-NT50
SFSD15-HSK80
Peso Total
151 Kg
HSK80-4385
HSK80
ϕ120
132.4
HSK80
HARDY
4-ϕ 10.3 35
M12x1.75 30
ϕ320
30°
30°
PCD ϕ280
PCD ϕ101.6
7-ϕ18
NT50
ϕ220
ϕ120
ECMA E11315
4-ϕ 8.5 25
M10x1.5 20
8M-62T
ϕ156.5xJx25
45°
326.6
110
212
140
37
278
80
455
872.5

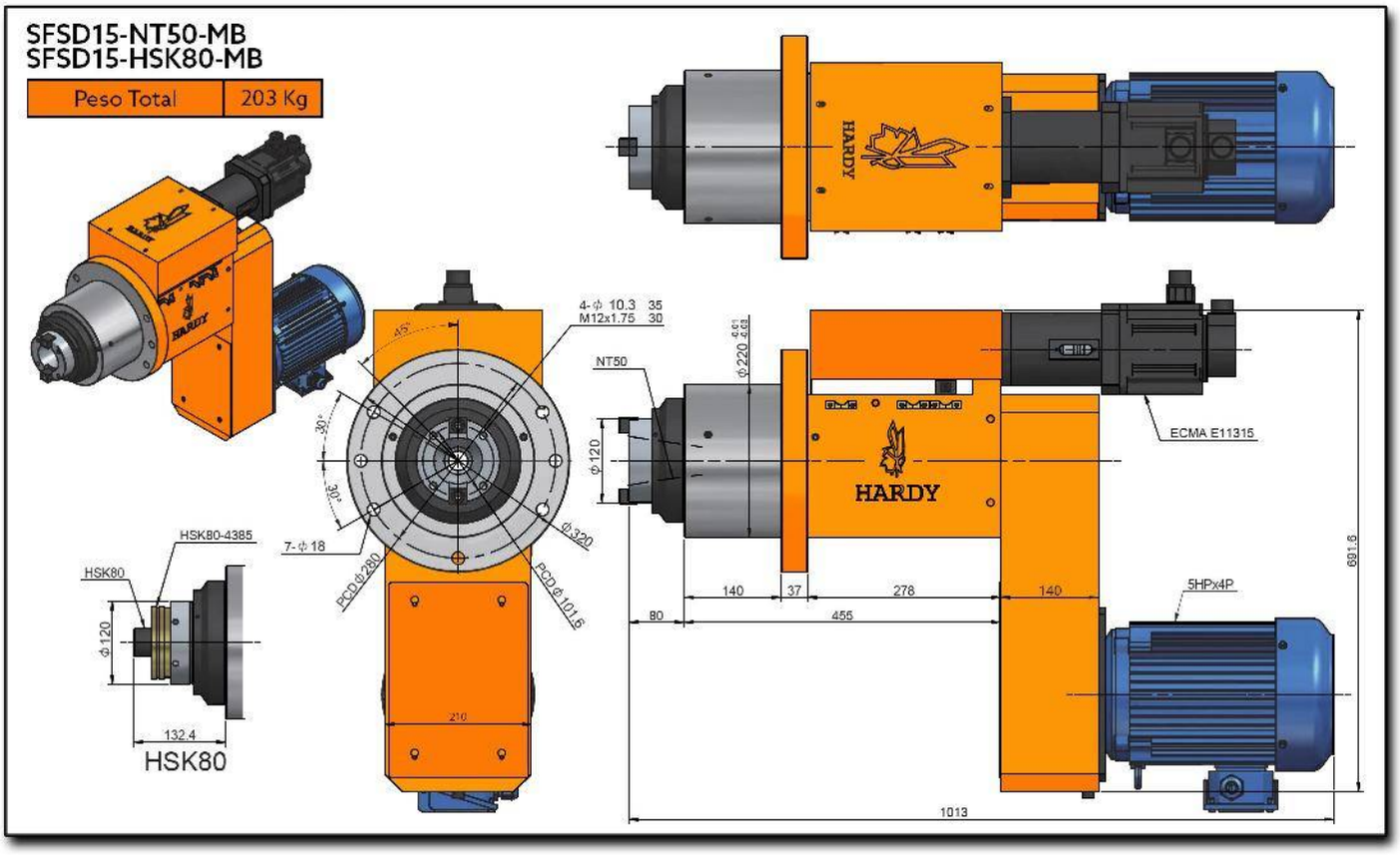
SFSD15-NT50-MB
SFSD15-HSK80-MB
Peso Total
203 Kg
HARDY
4-ϕ 10.3 35
M12x1.75 30
NT50
ϕ220
ϕ120
ECMA E11315
7-ϕ18
ϕ320
PCD ϕ280
PCD ϕ101.6
HSK80-4385
HSK80
ϕ120
132.4
HSK80
210
140
37
278
140
80
455
5HPx4P
691.6
1013

SFSD15H-150

High Performance Drilling/Tapping Servo Spindle Head Flange Type

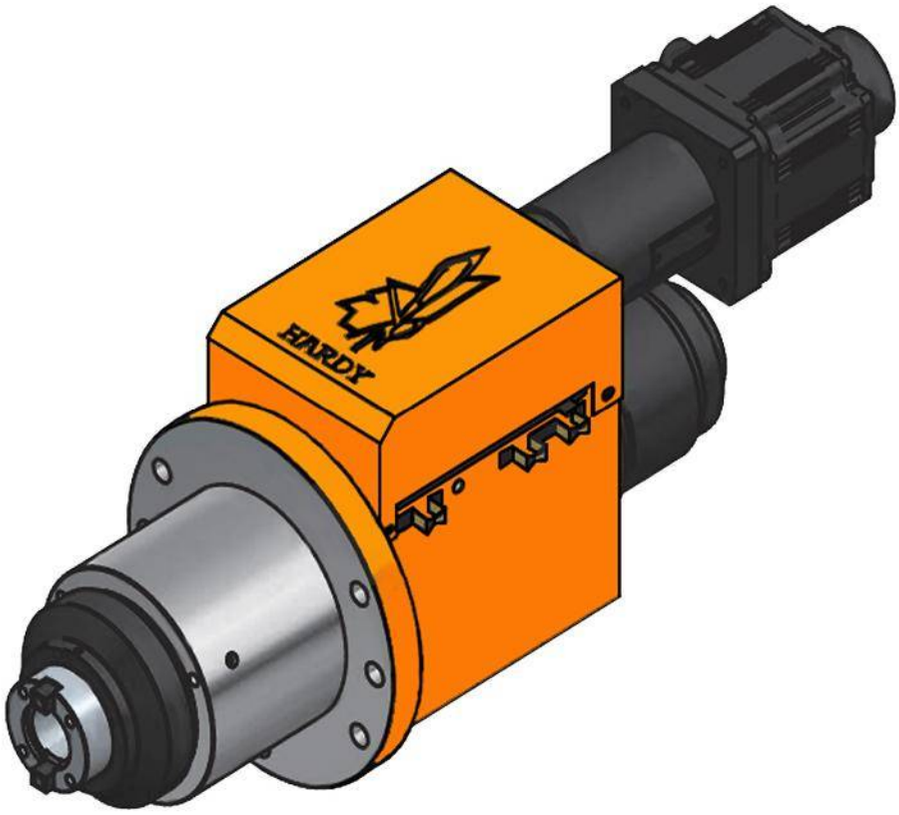

Characteristics & Dimensions

Model	SFSD15H-150M
Drilling Capacity (S45C)	*Ø50*
Maximum Stroke	*150 mm.*
Maximum Speed (r.p.m.)	*4,000*
Electric Power Maximum Power	*5 H.p. x 4P*
Spindle Polley	*8M-62T | Ø156.5 x J x 25*
Spindle Bearings	*7014 x 2* *7012 x 2*
Pulley Bearings	*6213ZZ x 2*
Ball Screw Block Bearings	*7205 x 2*
Ball Screw Block Seals	*TC30-50-10 x 2*
Front Cover Seals	*TC150-180-14 x 1*
Front Cover O'Rings	*G120 x 1 / G150 x 1*
Spindle Seals	*TC90-110-12 x 1*
Piston O'Rings	*P150 x 2*
Ball Screw Type	*Ø32 x 5 x C5*

** Roundness ≤ 0.003 mm.
*** All dimensions are given in millimeters.

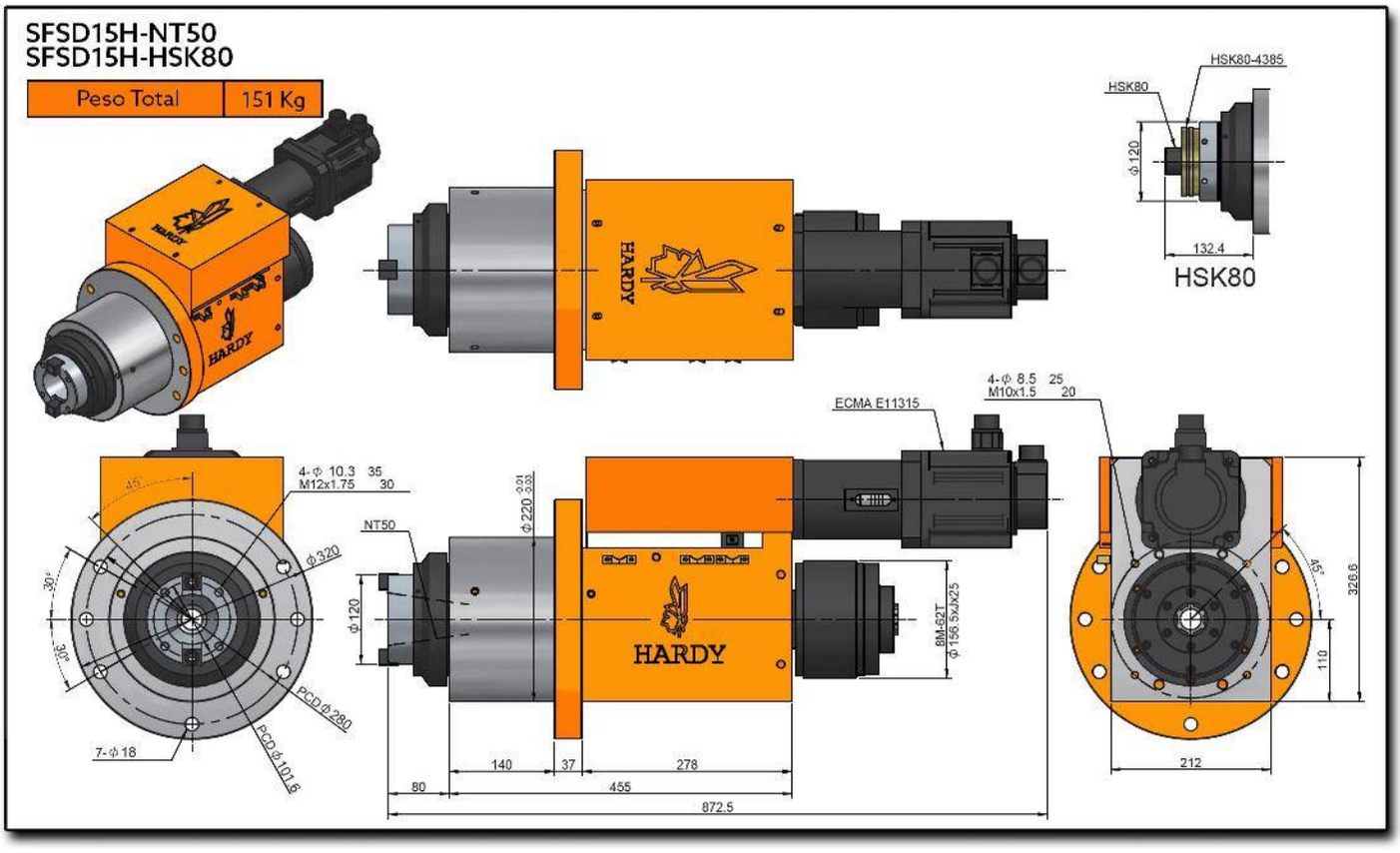
SFSD15H-NT50
SFSD15H-HSK80
Peso Total
151 Kg
HSK80-4385
HSK80
ϕ120
132.4
HSK80
HARDY
4-ϕ 10.3 35
M12x1.75 30
45°
30°
ϕ320
PCD ϕ280
PCD ϕ101.6
7-ϕ18
NT50
ϕ220 332
ϕ120
ECMA E11315
4-ϕ 8.5 25
M10x1.5 20
8M-62T
ϕ156.5xM25
45°
326.6
110
212
140
37
278
80
455
872.5

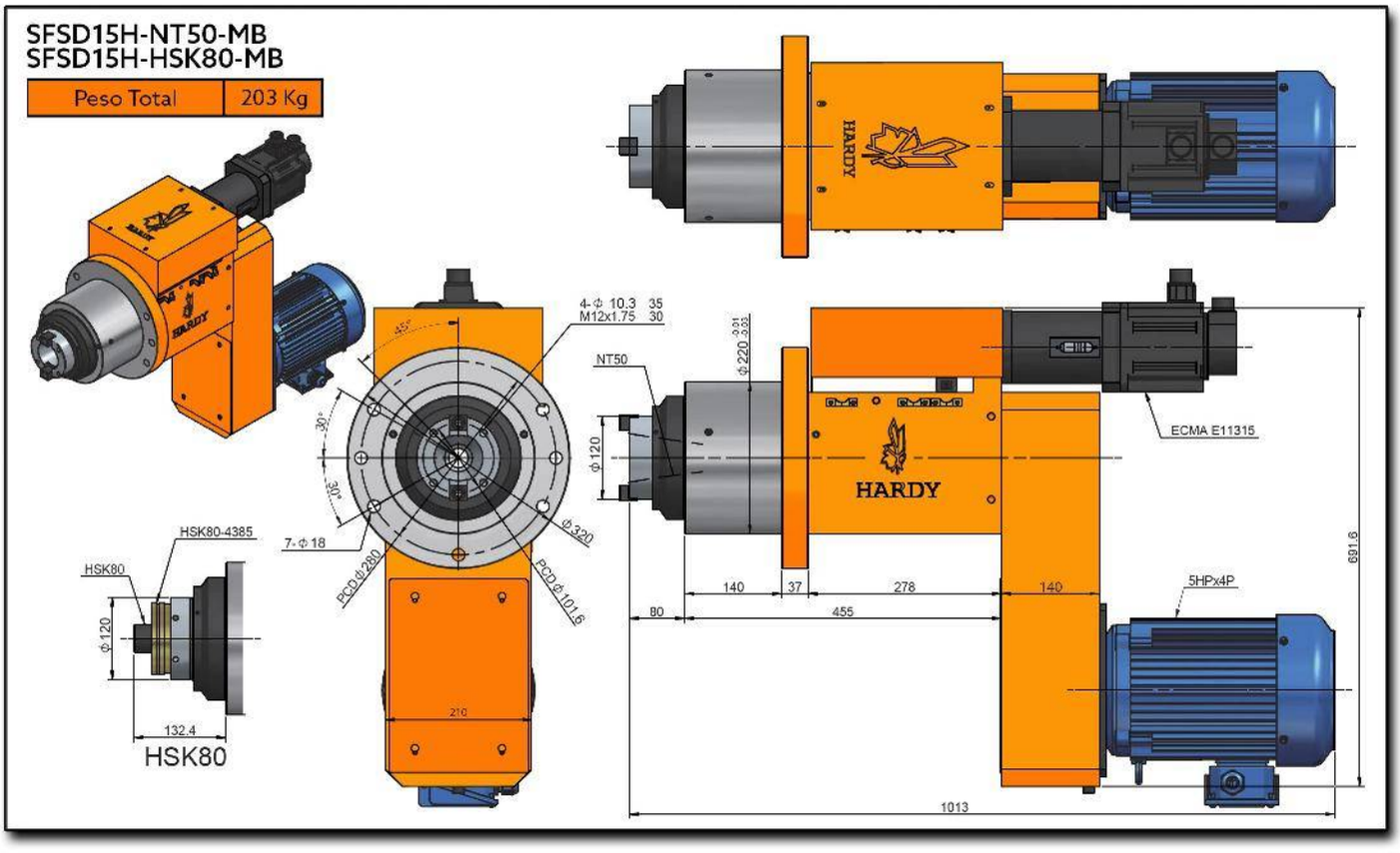
SFSD15H-NT50-MB
SFSD15H-HSK80-MB
Peso Total
203 Kg
HARDY
4-Φ 10.3 35
M12x1.75 30
45°
30°
30°
7-Φ 18
PCD Φ280
PCD Φ101.6
Φ320
NT50
Φ 220 -0.01 -0.033
Φ120
ECMA E11315
HARDY
HSK80-4385
HSK80
Φ120
132.4
HSK80
210
140
37
278
140
80
455
5HPx4P
691.6
1013

SFSDL SERIES

DRILLING/TAPPING SERVO COMPACT SPINDLES WITH LINEAR RAIL FLAGE TYPE

SFSDL15-150

Tapping/Drilling Servo Spindle Head Flange Type

Patent No. M581516

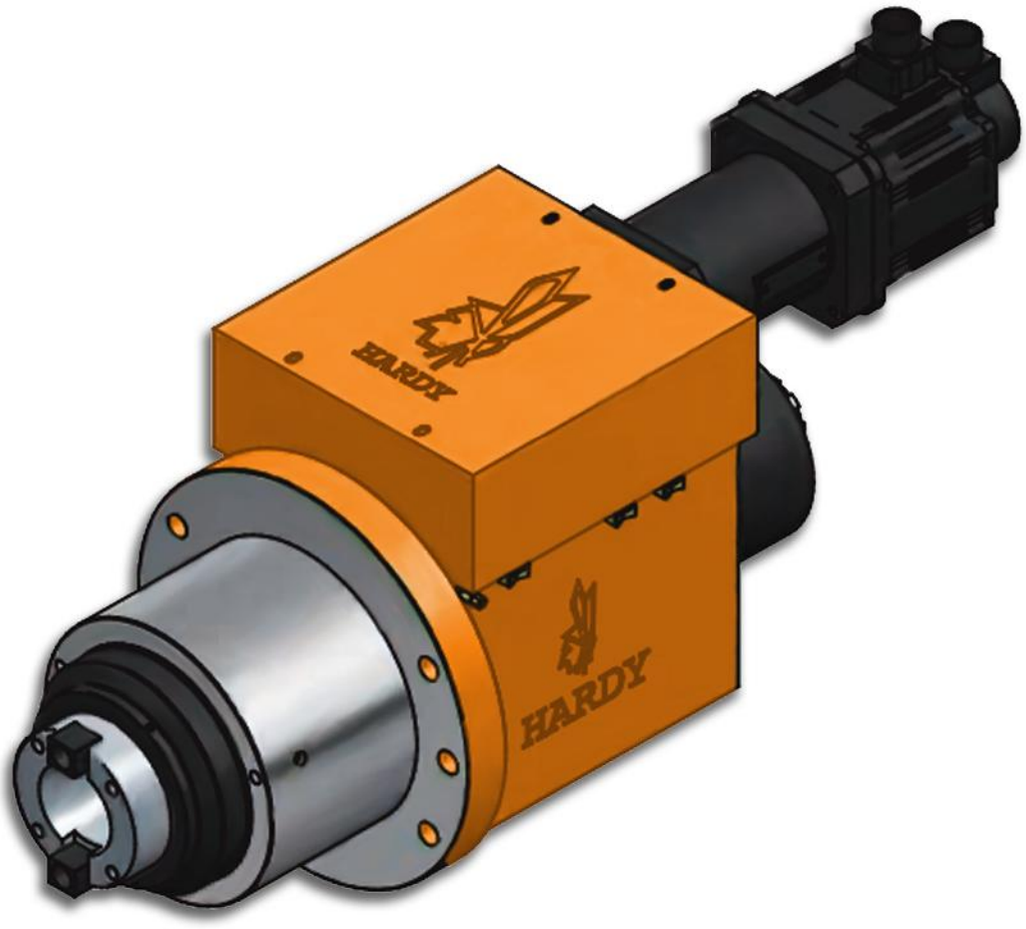

Characteristics & Dimensions

MODEL	SFSDL15-150
Maximum Drilling Capacity *(S45C)*	*Ø50*
Maximum Tapping Capacity *(S45C)*	*M50*
Maximum Spindle Stroke	*150.00*
Maximum Spindle Speed *(r.p.m.)*	*1,600.00*
Maximum 3-Phase Equipment Power	*5HP x 4P*
Spindle Pulley	*6014Z x 1 | 6012Z x 1* *32014 x 1 | 32012 x 1*
Spindle Bearings	*6017ZZ x 2*
Packed Screw Block Bearings	*7205 x 2*
Packed Screw Block Seals	*TC30-50-10 x 2*
Front Cover Seal	*TC150-180-14 x 1*
Front Cover O-Ring	*G120 x 1 | G150 x 1*
Spindle Seals	*TC90-110-12 x 1*
Piston O-Ring	*P150 x 2*
Ball Screw	*Ø32 x 5 x C5*

**** Roundness ≤ 0.003mm.*
***** All dimensions are given in millimeters.*

SFSDL15-NT50
SFSDL15-HSK80

TOTAL WEIGHT	151 Kg

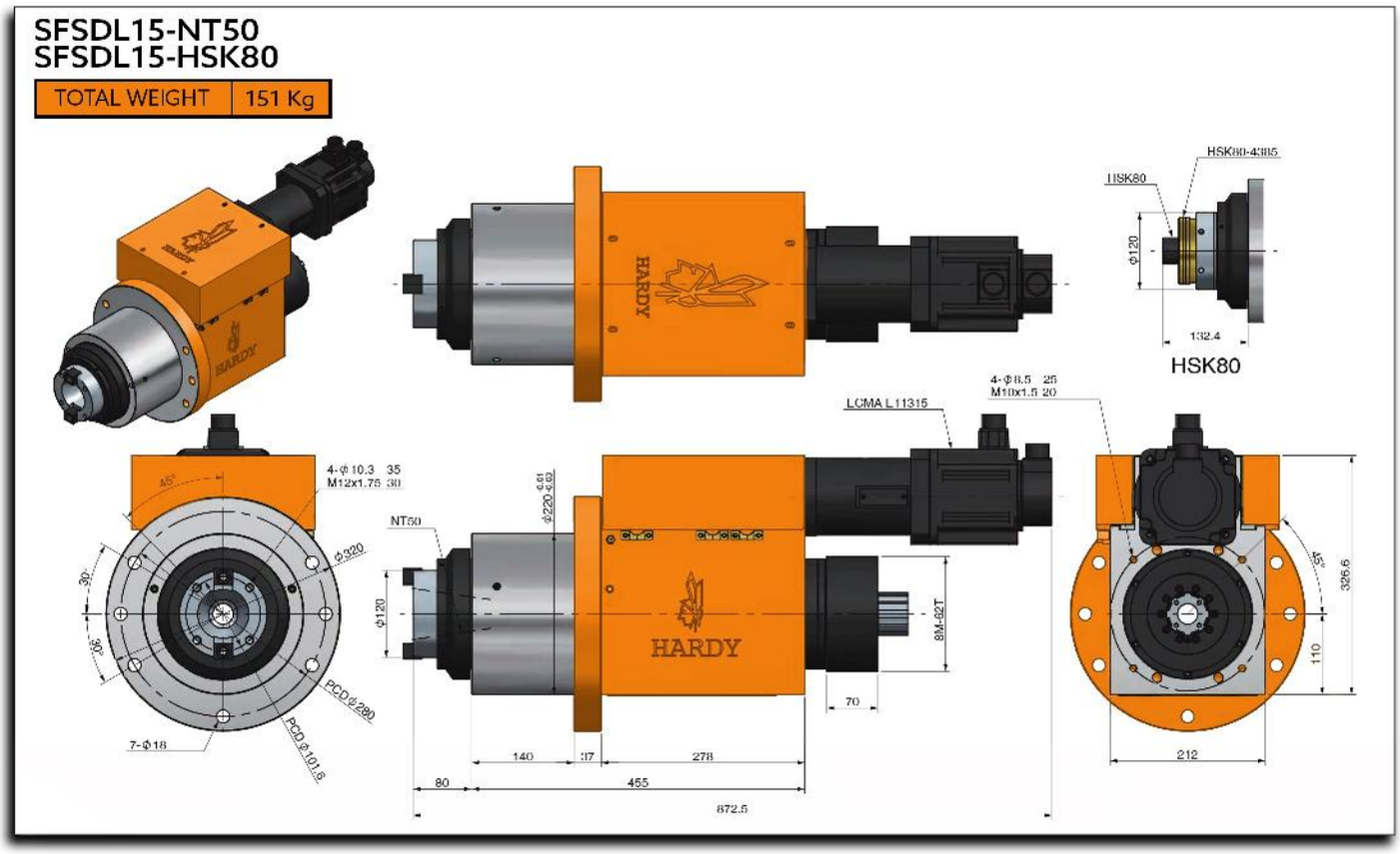

SFSDL15-NT50-MB
SFSDL15-HSK80-MB

TOTAL WEIGHT	203 Kg

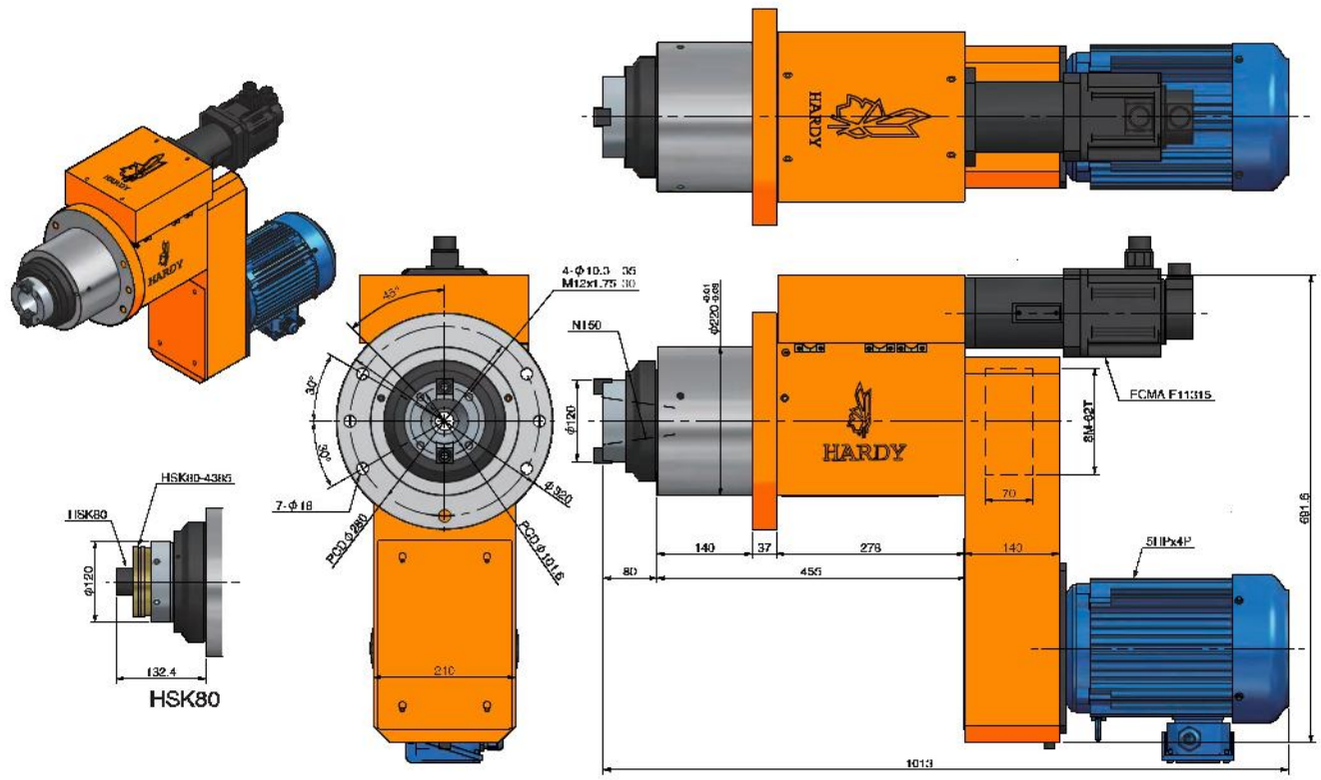

SFSDL15H-150

High Performance Tapping/Drilling Servo Spindle Head Flange Type

Patent No. M581516

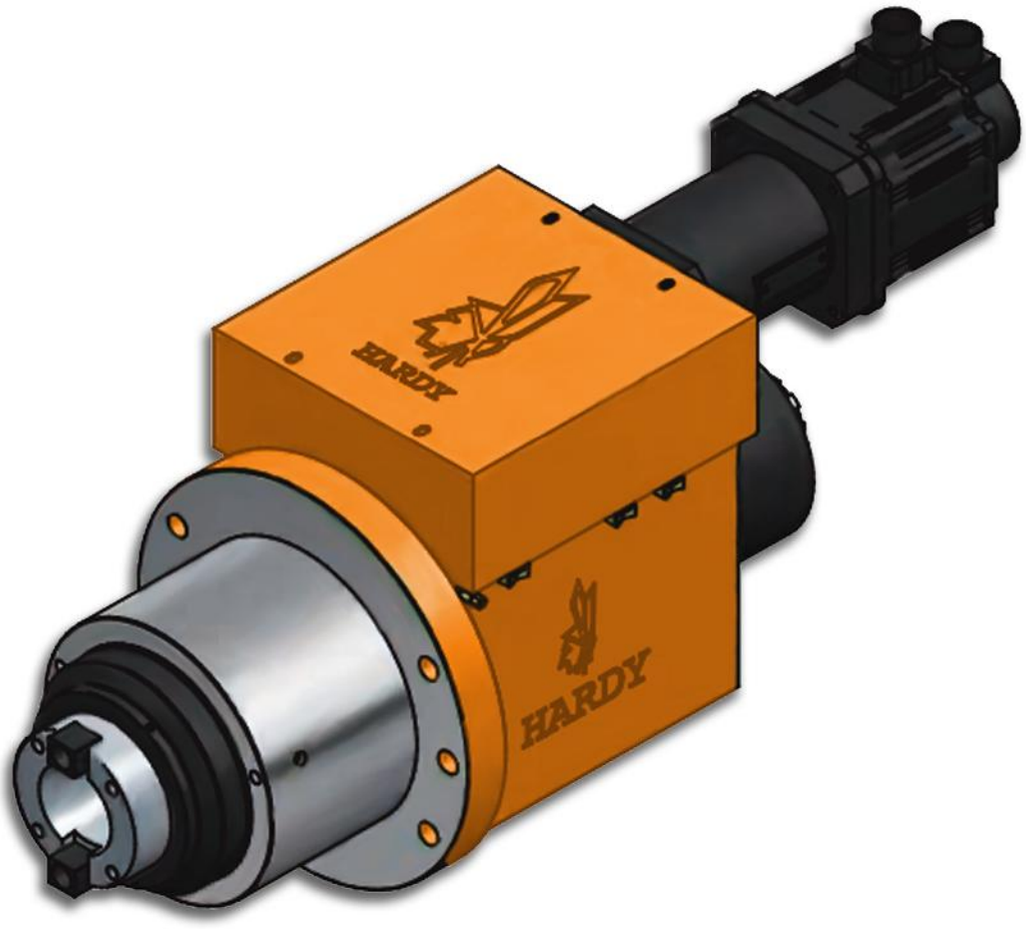

Characteristics & Dimensions

MODEL	SFSDL15H-150
Maximum Drilling Capacity *(S45C)*	*Ø50*
Maximum Tapping Capacity *(S45C)*	*M50*
Maximum Spindle Stroke	*150.00*
Maximum Spindle Speed *(r.p.m.)*	*4,000.00*
Maximum 3-Phase Equipment Power	*5HP x 4P*
Spindle Pulley	*7014 x 2* *7012 x 2*
Spindle Bearings	*6017ZZ x 2*
Packed Screw Block Bearings	*7205 x 2*
Packed Screw Block Seals	*TC30-50-10 x 2*
Front Cover Seal	*TC150-180-14 x 1*
Front Cover O-Ring	*G120 x 1 | G150 x 1*
Spindle Seals	*TC90-110-12 x 1*
Piston O-Ring	*P150 x 2*
Ball Screw	*Ø32 x 5 x C5*

**** Roundness ≤ 0.003mm.*
***** All dimensions are given in millimeters.*

SFSDL15H-NT50
SFSDL15H-HSK80

TOTAL WEIGHT	151 Kg

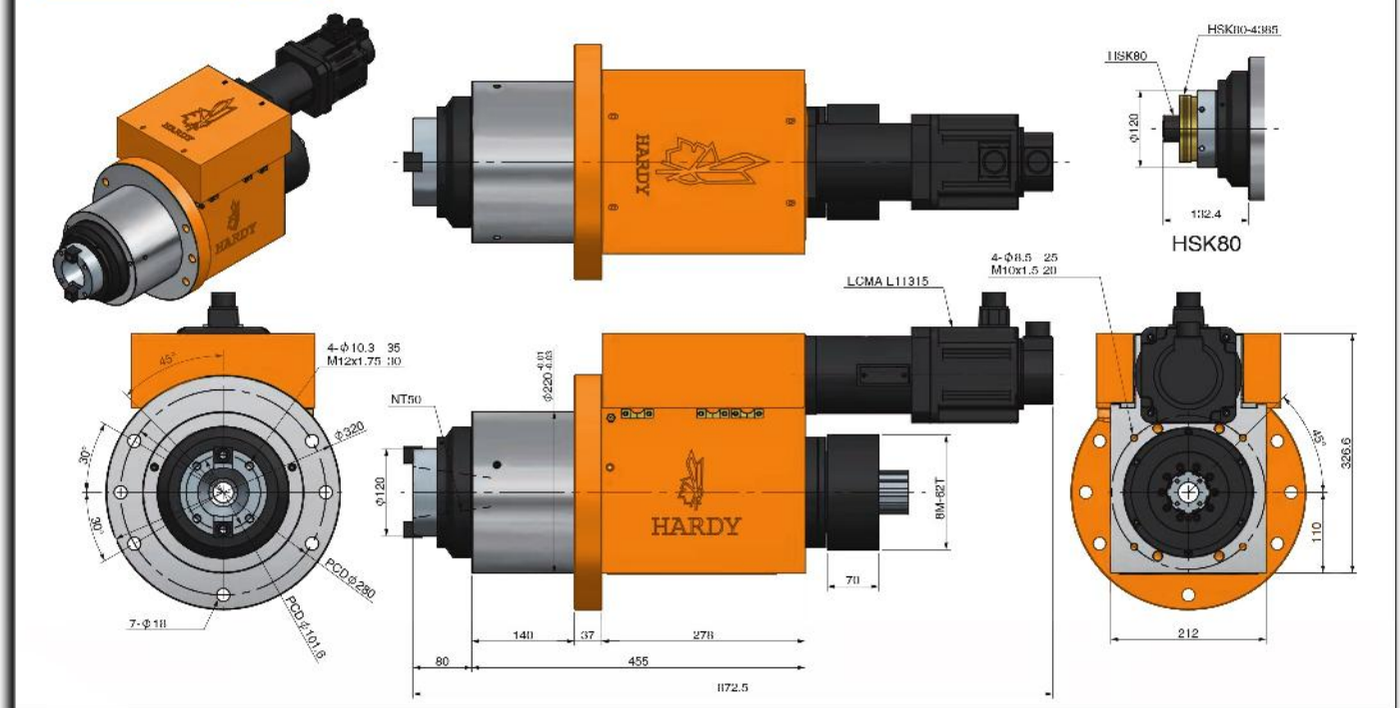

SFSDL15H-NT50-MB
SFSDL15H-HSK80-MB

TOTAL WEIGHT	203 Kg

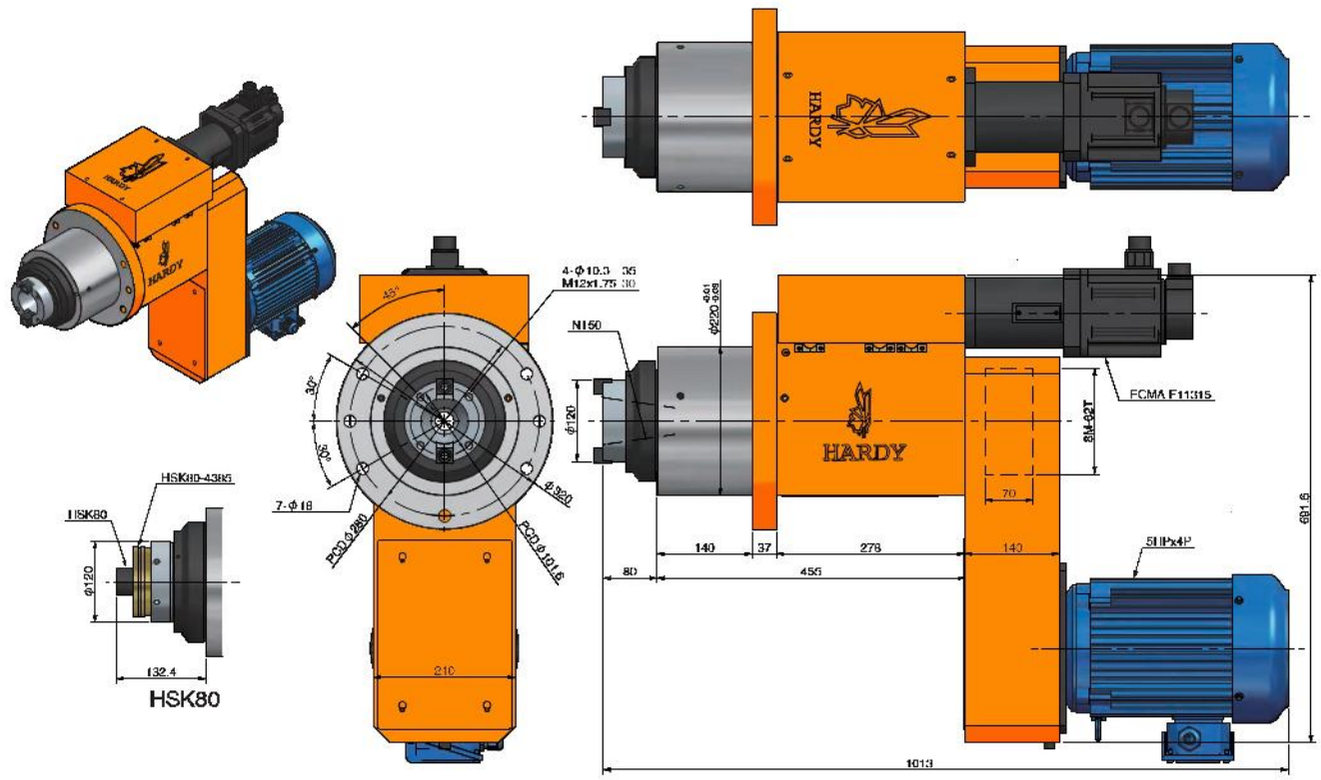

SFST SERIES

TAPPING SPINDLE HEADS WITH LEAD SCREW TRANSMISSION FLAGE TYPE

SFST06-65

Tapping Spindle Head With Lead Screw Transmision Flange Type

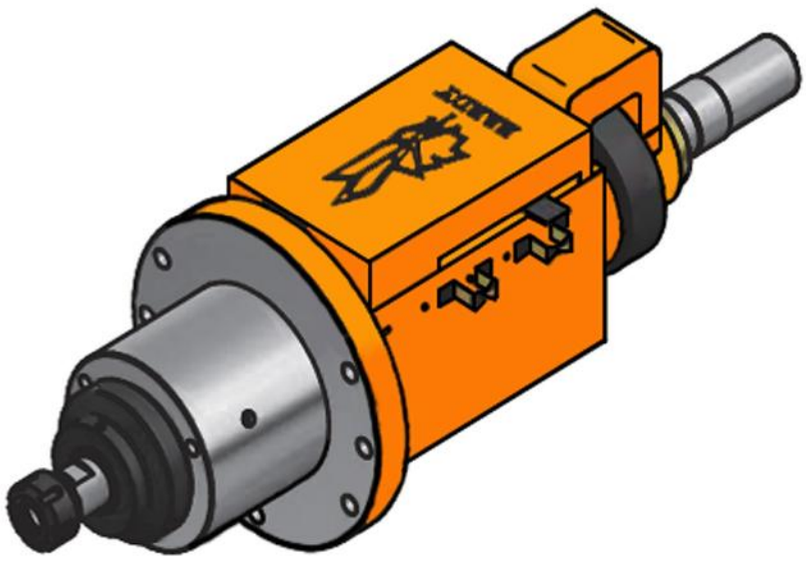

Characteristics & Dimensions

Model	SFST06-65
Tapping Capacity (S45C)	*M12*
Maximum Stroke	*65 mm.*
Maximum Speed (r.p.m.)	*0.4 ~ 2.0 mm*
Maximum Power (3 Phases)	*1 Hp x 4P*
Spindle Pulley	*8M x 42T*
Spindle Bearings	*6006Z x 1 | 6005Z x 1* *32006 x 1 | 32005 x 1*
Pulley Bearings	*6006ZZ x 3*
Frontal Cover Seal	*TC70-90-12 x 1*
Frontal Cover O-Ring	*G40 x 1*
Piston Seal	*TC45-60-7 x 1*
Piston O-Ring	*P70 x 2*

**** All dimensions are given in millimeters.*
***** Roundness: ≤ 0.003 mm.*

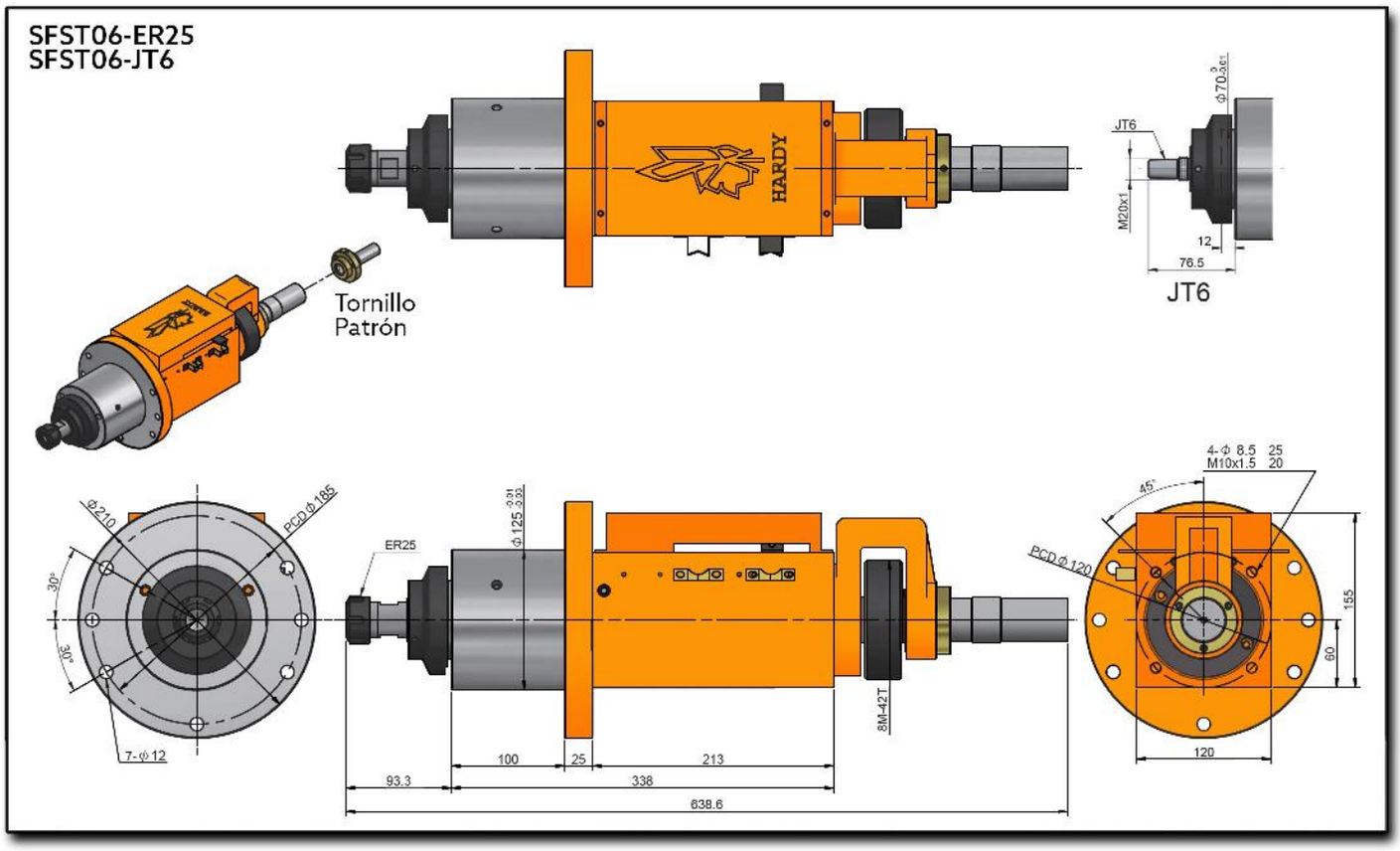
SFST06-ER25
SFST06-JT6
HARDY
Tornillo
Patrón
JT6
M20x1
12
76.5
JT6
Ø210
PCD Ø186
30°
30°
7-Ø12
ER25
Ø125 -0.01 -0.030
8M-42T
100
25
213
93.3
338
638.6
4-Ø 8.5 25
M10x1.5 20
45°
PCD Ø120
155
60
120

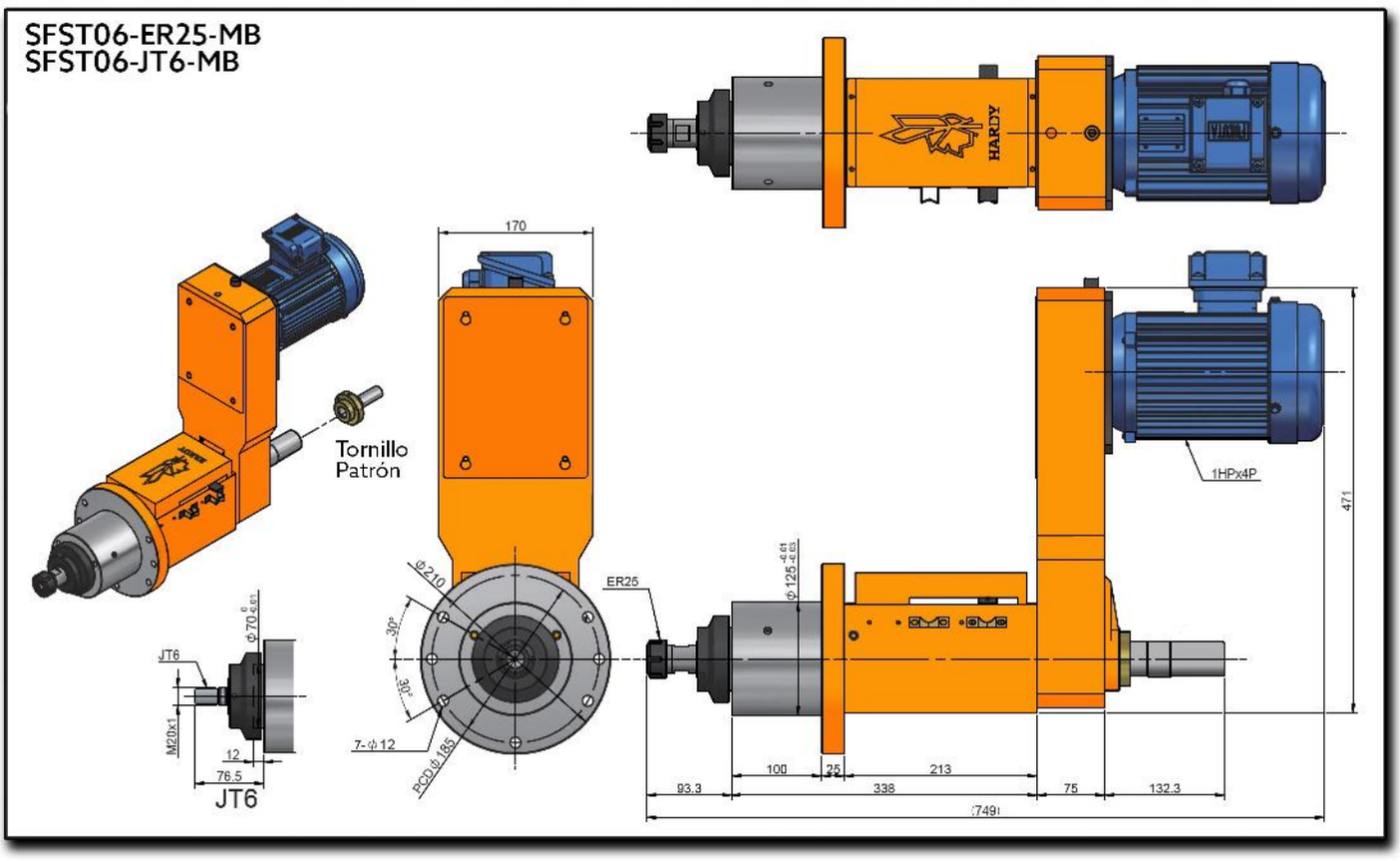
SFST06-ER25-MB
SFST06-JT6-MB
HARDY
170
Tornillo
Patrón
1HPx4P
471
ER25
Φ210
30°
30°
7-Φ12
PCD Φ185
JT6
M20x1
12
76.5
JT6
100
25
213
93.3
338
75
132.3
(749)

SFST09-85

Tapping Spindle Head With Lead Screw Transmision Flange Type

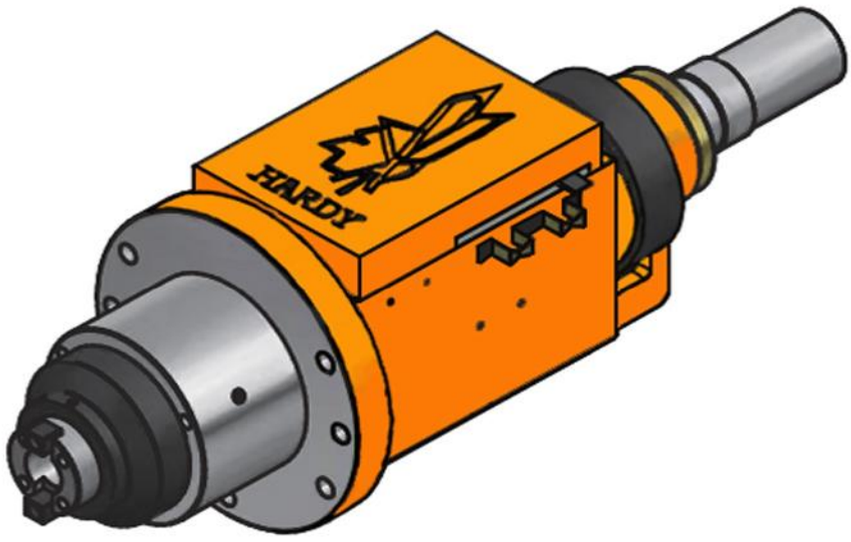

Characteristics & Dimensions

Model	SFST09-85M
Tapping Capacity (S45C)	*M30*
Maximum Stroke	*85 mm.*
Maximum Speed (r.p.m.)	*0.7 ~ 2.5 mm.*
Maximum Power (3 Phases)	*2 Hp x 4P*
Spindle Pulley	*8M x 52T*
Spindle Bearings	*6007Z x 1 | 6006Z x 1* *32007 x 1 | 32006 x 1*
Pulley Bearings	*6010ZZ x 3*
Frontal Cover Seal	*TC90-110-12 x 1*
Frontal Cover O-Ring	*G90 x 1 | G62 x 1*
Piston Seal	*TC50-65-8 x 1*
Piston O-Ring	*P90 x 2*

**** All dimensions are given in millimeters.*
***** Roundness: ≤ 0.003 mm.*

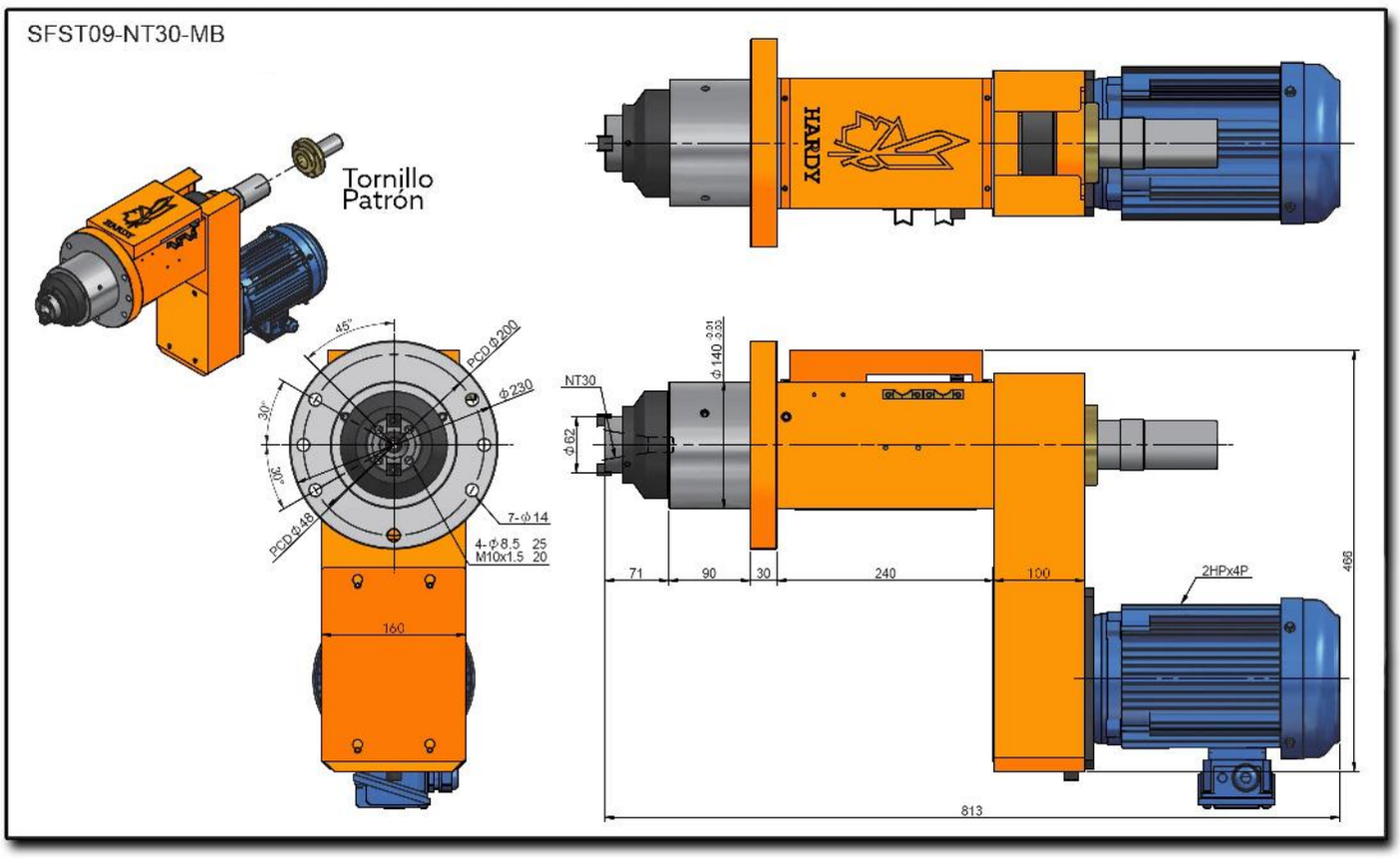
SFST09-NT30-MB
Tornillo
Patrón
HARDY
45°
30°
30°
PCD Φ200
Φ230
PCD Φ48
7-Φ14
4-Φ8.5 25
M10x1.5 20
160
NT30
Φ62
Φ140 0.01 0.033
71
90
30
240
100
2HPx4P
466
813

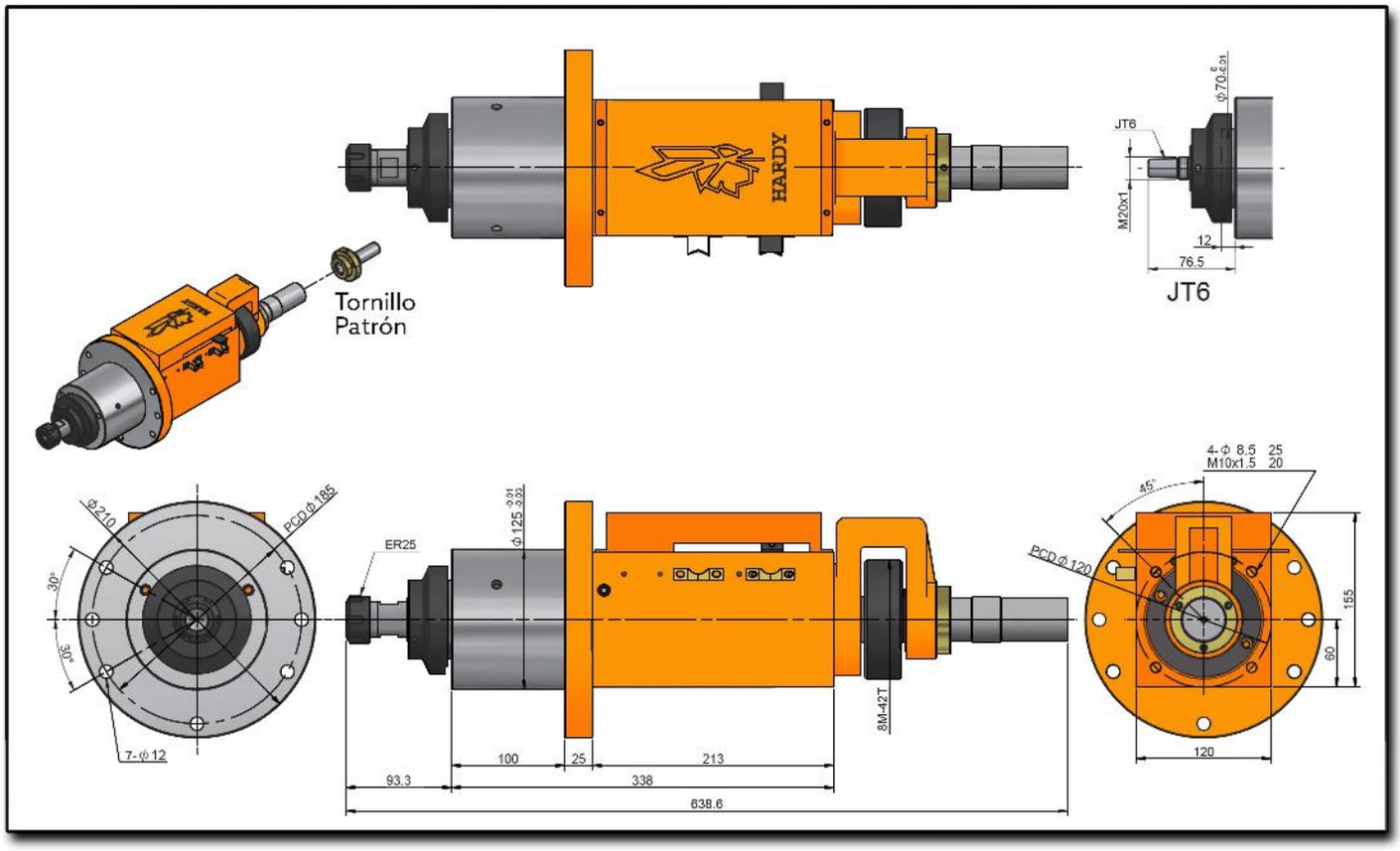
HARDY
Tornillo
Patrón
JT6
M20x1
12
76.5
JT6
Ø210
PCD Ø185
30°
30°
7-Ø12
ER25
Ø125 0.01 0.03
100
25
213
93.3
338
638.6
8M-42T
4-Ø 8.5 25
M10x1.5 20
45°
PCD Ø120
155
60
120

SFST11-90

Tapping Spindle Head With Lead Screw Transmision Flange Type

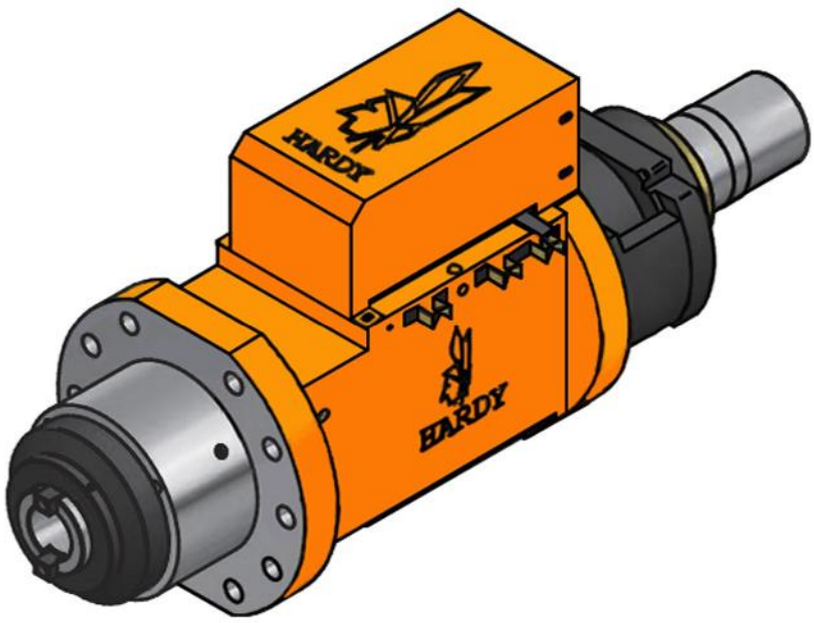

Characteristics & Dimensions

Model	SFST11-90M
Tapping Capacity (S45C)	*M32*
Maximum Stroke	*90 mm.*
Maximum Speed (r.p.m.)	*0.8 ~ 3.0 mm.*
Maximum Power (3 Phases)	*3 Hp x 4P*
Spindle Pulley	*8M x 56T*
Spindle Bearings	*6210ZZ x 3*
Pulley Bearings	*6013ZZ x 1 | 6015ZZ x 1*
Frontal Cover Seal	*TC110-130-13 x 1*
Frontal Cover O-Ring	*G70 x 1 | G110 x 1*
Piston Seal	*TC70-90-12 x 1*
Piston O-Ring	*P110 x 2*

**** All dimensions are given in millimeters.*
***** Roundness: ≤ 0.003 mm.*

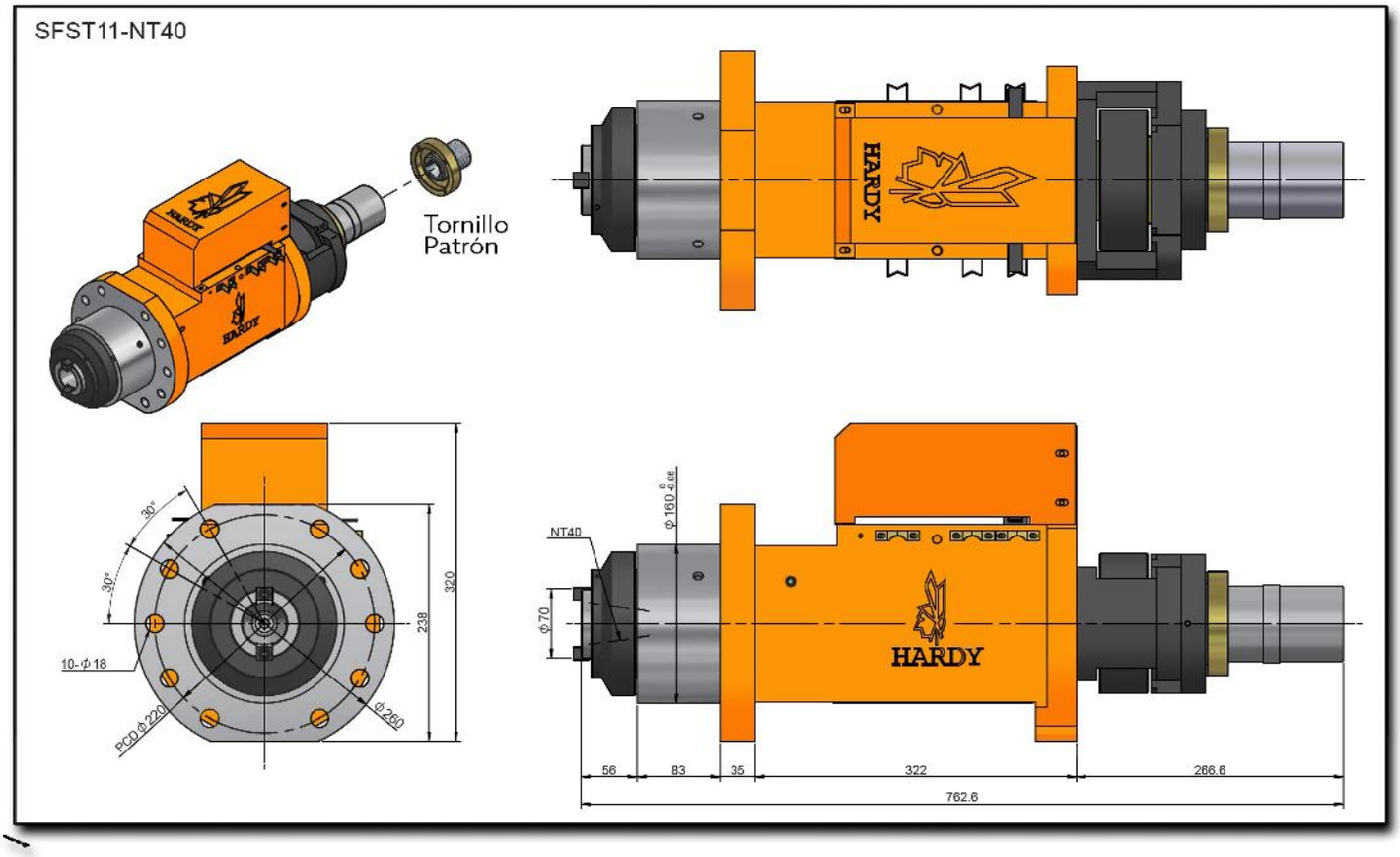
SFST11-NT40
Tornillo
Patrón
HARDY
30°
30°
10-Φ18
PCD Φ220
Φ260
320
238
NT40
Φ160
Φ70
HARDY
56
83
35
322
266.6
762.6

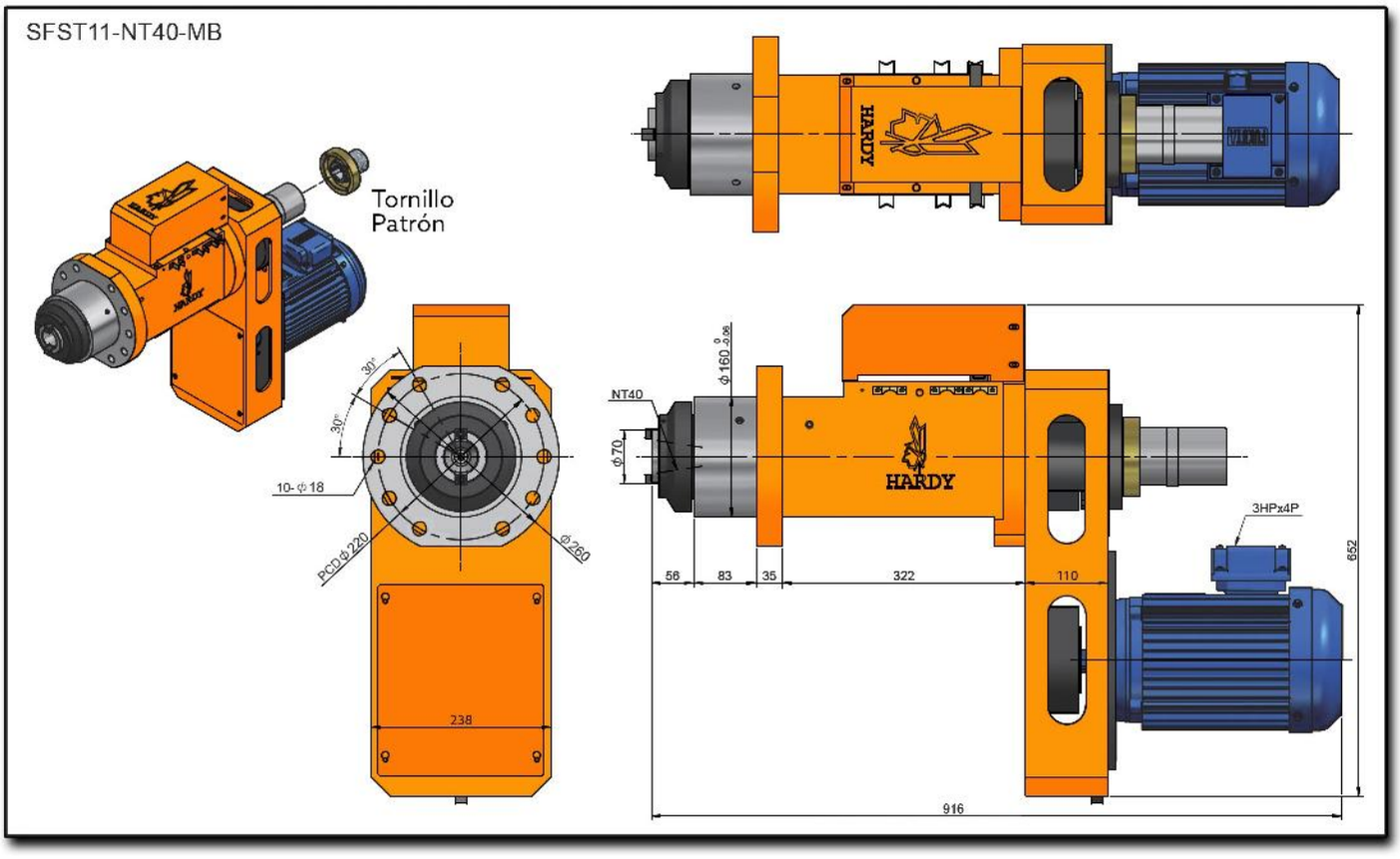
SFST11-NT40-MB
Tornillo
Patrón
HARDY
30°
30°
10-φ18
PCD φ220
φ260
238
NT40
φ70
φ160
HARDY
3HPx4P
56
83
35
322
110
652
916

SFST12-90

Tapping Spindle Head With Lead Screw Transmision Flange Type

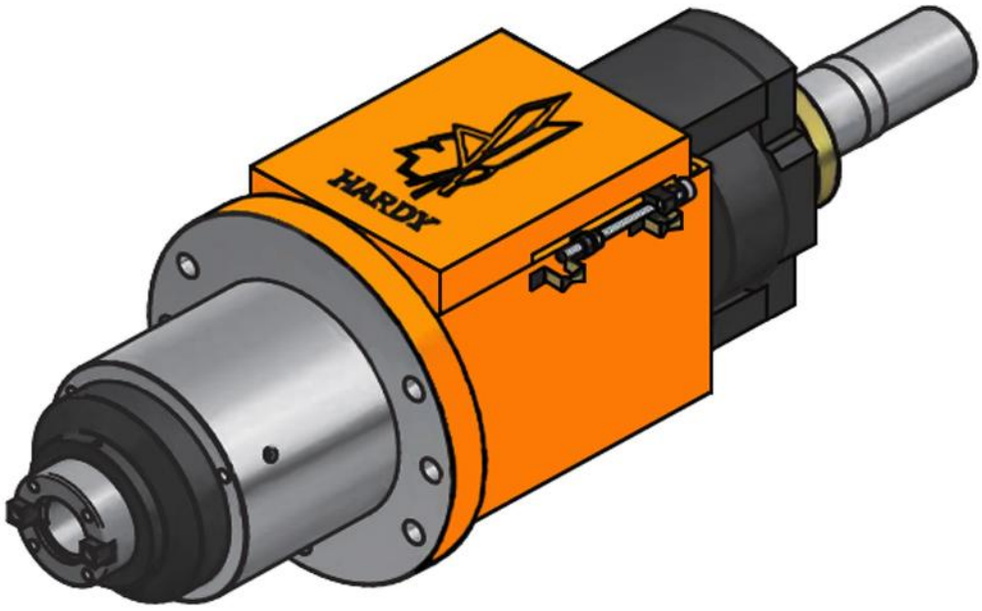

Characteristics & Dimensions

Model	SFST12-90M
Tapping Capacity (S45C)	*M45*
Maximum Stroke	*90 mm.*
Maximum Speed (r.p.m.)	*0.8 ~ 3.0 mm.*
Maximum Power (3 Phases)	*3 Hp x 4P*
Spindle Pulley	*8M x 62T*
Spindle Bearings	*6011Z x 1 | 6009Z x 1* *32011 x 1 | 32009 x 1*
Pulley Bearings	*6211ZZ x 2*
Frontal Cover Seal	*TC120-145-12 x 1*
Frontal Cover O-Ring	*G120 x 1 | G85 x 1*
Piston Seal	*TC75-90-12 x 1*
Piston O-Ring	*P120 x 2*

**** All dimensions are given in millimeters.*
***** Roundness: ≤ 0.003 mm.*

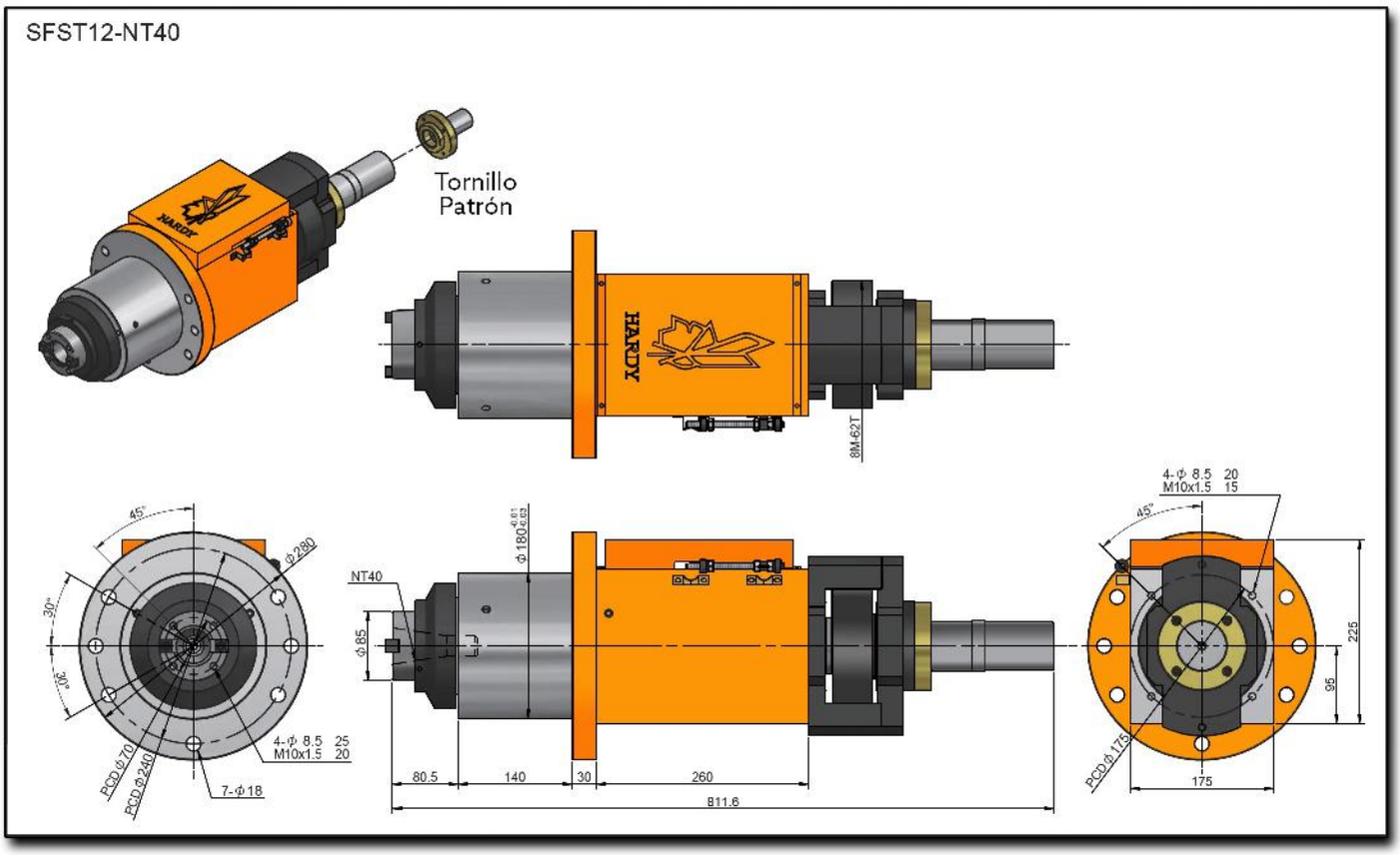
SFST12-NT40
Tornillo
Patrón
HARDY
8M-62T
45°
30°
Φ280
4-Φ 8.5 25
M10x1.5 20
PCD Φ70
PCD Φ240
7-Φ18
NT40
Φ180
Φ85
80.5
140
30
260
811.6
4-Φ 8.5 20
M10x1.5 15
225
96
PCD Φ175
175

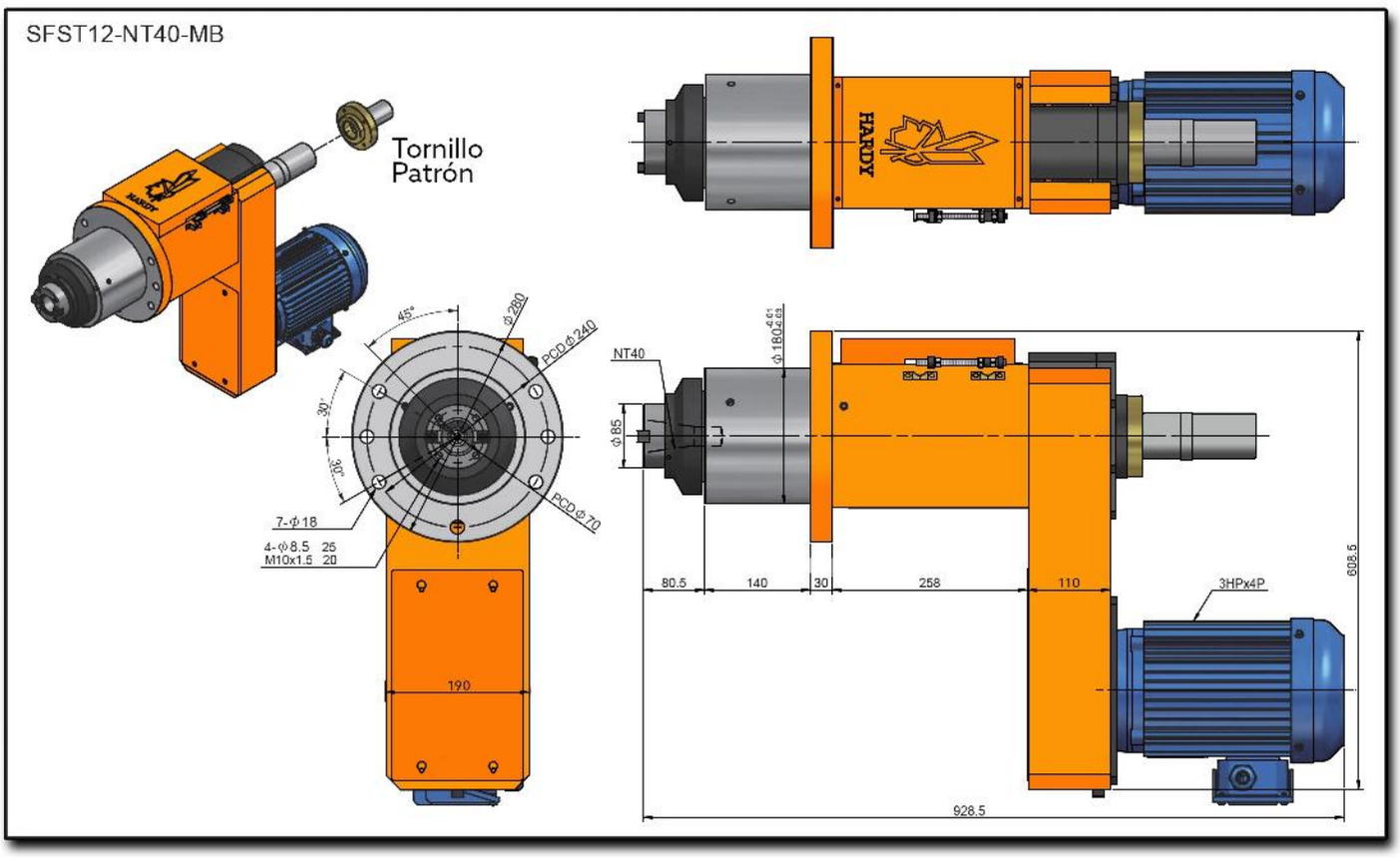
SFST12-NT40-MB
Tornillo
Patrón
HARDY
45°
30°
30°
Φ280
PCD Φ240
PCD Φ70
7-Φ18
4-Φ8.5 25
M10x1.5 20
190
NT40
Φ85
Φ180
80.5
140
30
258
110
3HPx4P
608.5
928.5

SFST15-120

Tapping Spindle Head With Lead Screw Transmision Flange Type

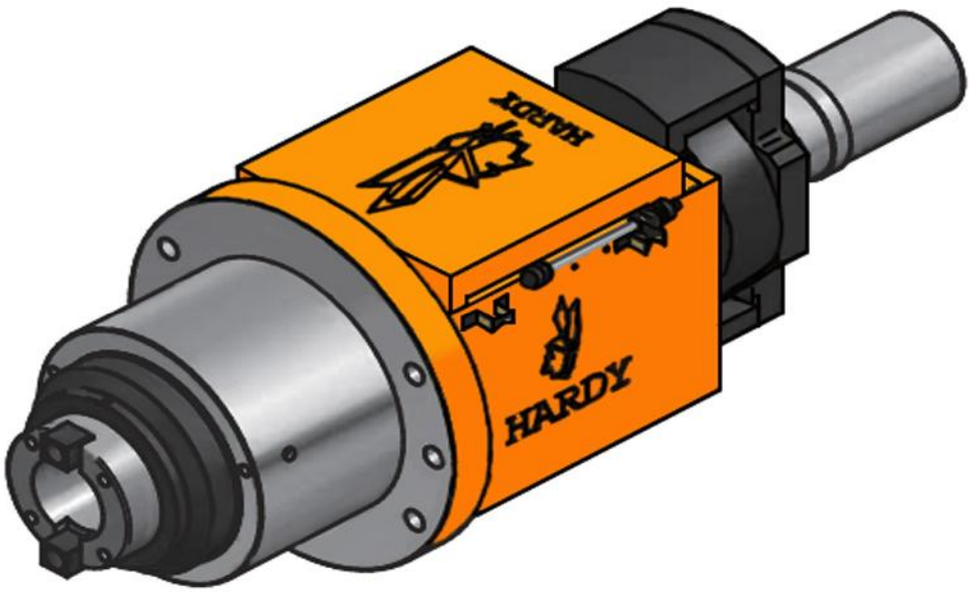

Characteristics & Dimensions

MODEL	SFST15-120
Tapping Capacity (S45C)	*M50*
Maximum Stroke	*120 mm.*
Maximum Speed (r.p.m.)	*0.8 ~ 30 mm.*
Maximum Power (3 Phases)	*5 Hp x 4P*
Spindle Pulley	*8M x 72T*
Spindle Bearings	*6014Z x 1 | 6012Z x 1* *32014 x 1 | 32012 x 1*
Pulley Bearings	*6010ZZ x 3*
Frontal Cover Seal	*TC90-110-12 x 1*
Frontal Cover O-Ring	*G120 x 1*
Piston Seal	*TC50-65-8 x 1*
Piston O-Ring	*P90 x 2*

**** All dimensions are given in millimeters.*
***** Roundness: ≤ 0.003 mm.*

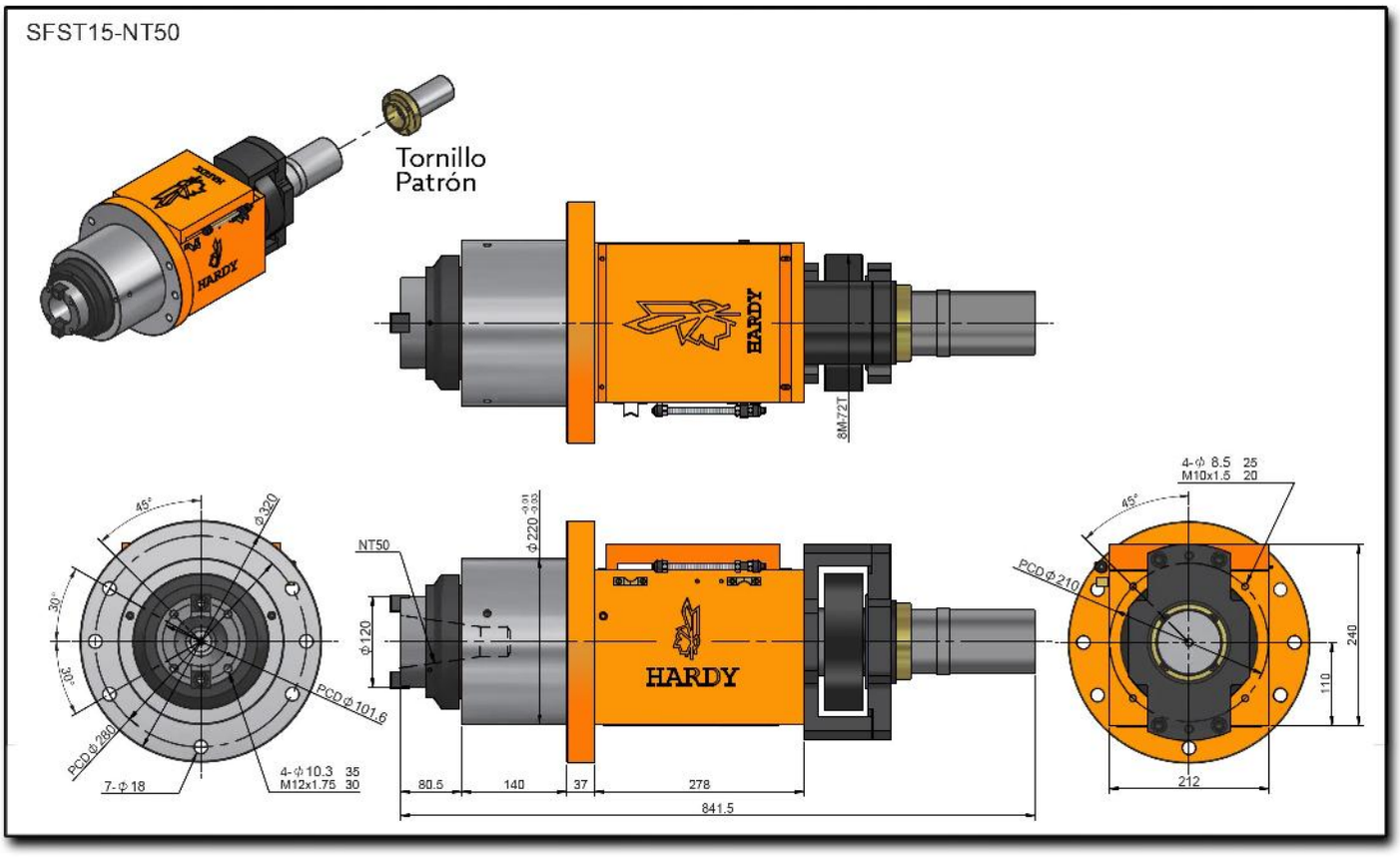
SFST15-NT50
Tornillo
Patrón
HARDY
8M-72T
45°
Φ320
30°
30°
PCD Φ260
PCD Φ101.6
7-Φ18
4-Φ10.3 35
M12x1.75 30
NT50
Φ220 -0.01 -0.03
Φ120
HARDY
80.5
140
37
278
841.5
4-Φ 8.5 25
M10x1.5 20
45°
PCD Φ210
240
110
212

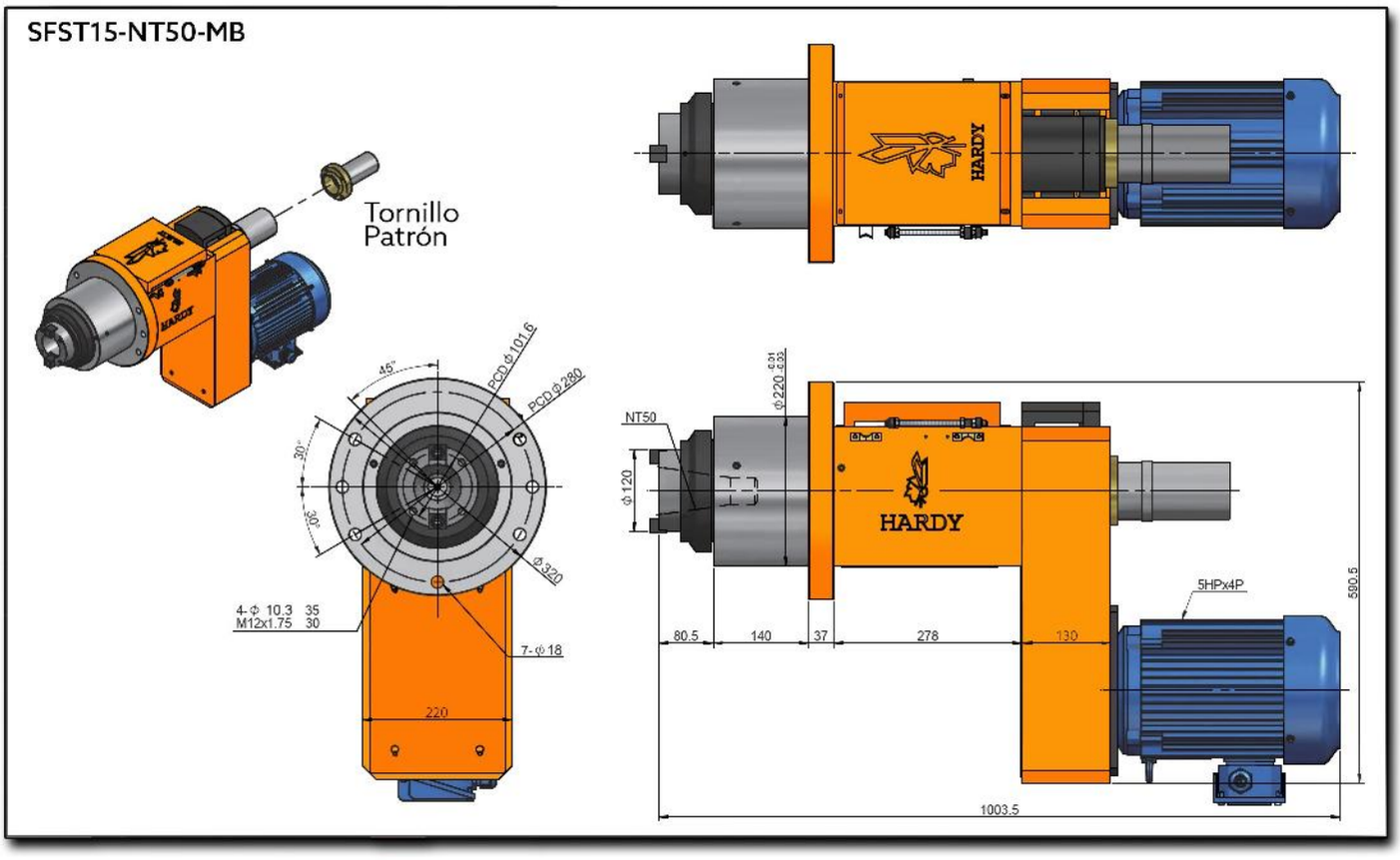
SFST15-NT50-MB
Tornillo
Patrón
HARDY
45°
30°
30°
PCD ϕ 101.6
PCD ϕ 280
ϕ 320
4- ϕ 10.3 35
M12x1.75 30
7- ϕ 18
220
NT50
ϕ 120
ϕ 220 0.01 -0.02
HARDY
5HPx4P
590.5
80.5
140
37
278
130
1003.5

SFSTL SERIES

FLANGE-TYPE TAPPING HEADS WITH LEAD-SCREW DRIVE

SFSTL15-120

Tapping Spindle Head With Lead Screw Transmission Flange Type

Patent No. M581516

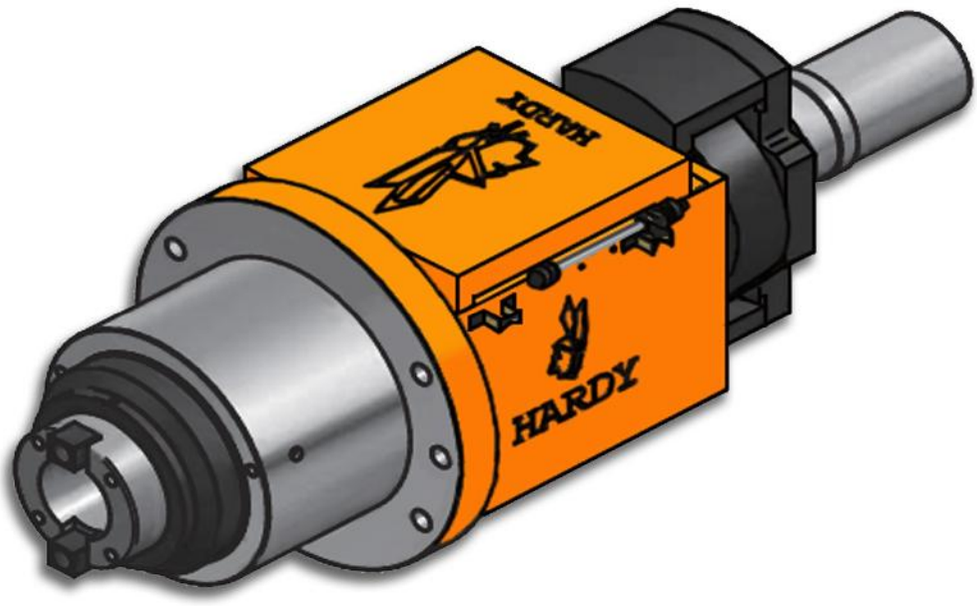

Characteristics & Dimensions

MODEL	SFSTL15-120
Tapping Capacity (S45C)	*M50*
Maximum Stroke	*120 mm.*
Maximum Speed (r.p.m.)	*0.8 ~ 30 mm.*
Maximum Power (3 Phases)	*5 Hp x 4P*
Spindle Pulley	*8M x 72T*
Spindle Bearings	*6014Z x 1 | 6012Z x 1* *32014 x 1 | 32012 x 1*
Pulley Bearings	*6010ZZ x 3*
Frontal Cover Seal	*TC150-180-14 x 1*
Frontal Cover O-Ring	*G120 x 1 | G150 x 1*
Piston Seal	*TC90-100-12 x 1*
Piston O-Ring	*P150 x 2*

**** All dimensions are given in millimeters.*
***** Roundness: ≤ 0.003 mm.*

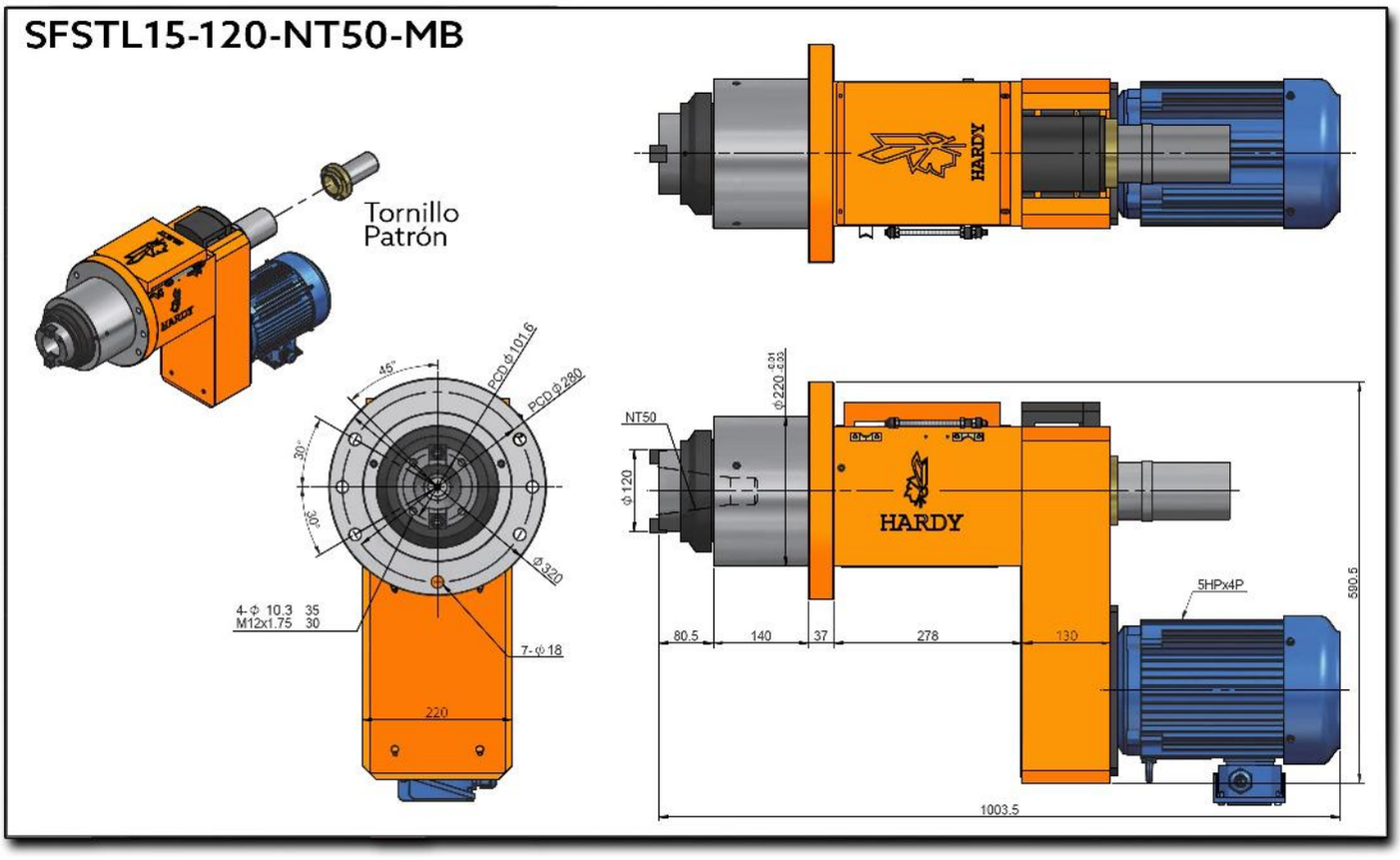
SFSTL15-120-NT50-MB
Tornillo
Patrón
HARDY
45°
30°
30°
PCD Φ 101.6
PCD Φ 280
Φ320
4-Φ 10.3 35
M12x1.75 30
7-Φ18
220
NT50
Φ120
Φ220 0.01 -0.02
HARDY
5HPx4P
590.5
80.5
140
37
278
130
1003.5

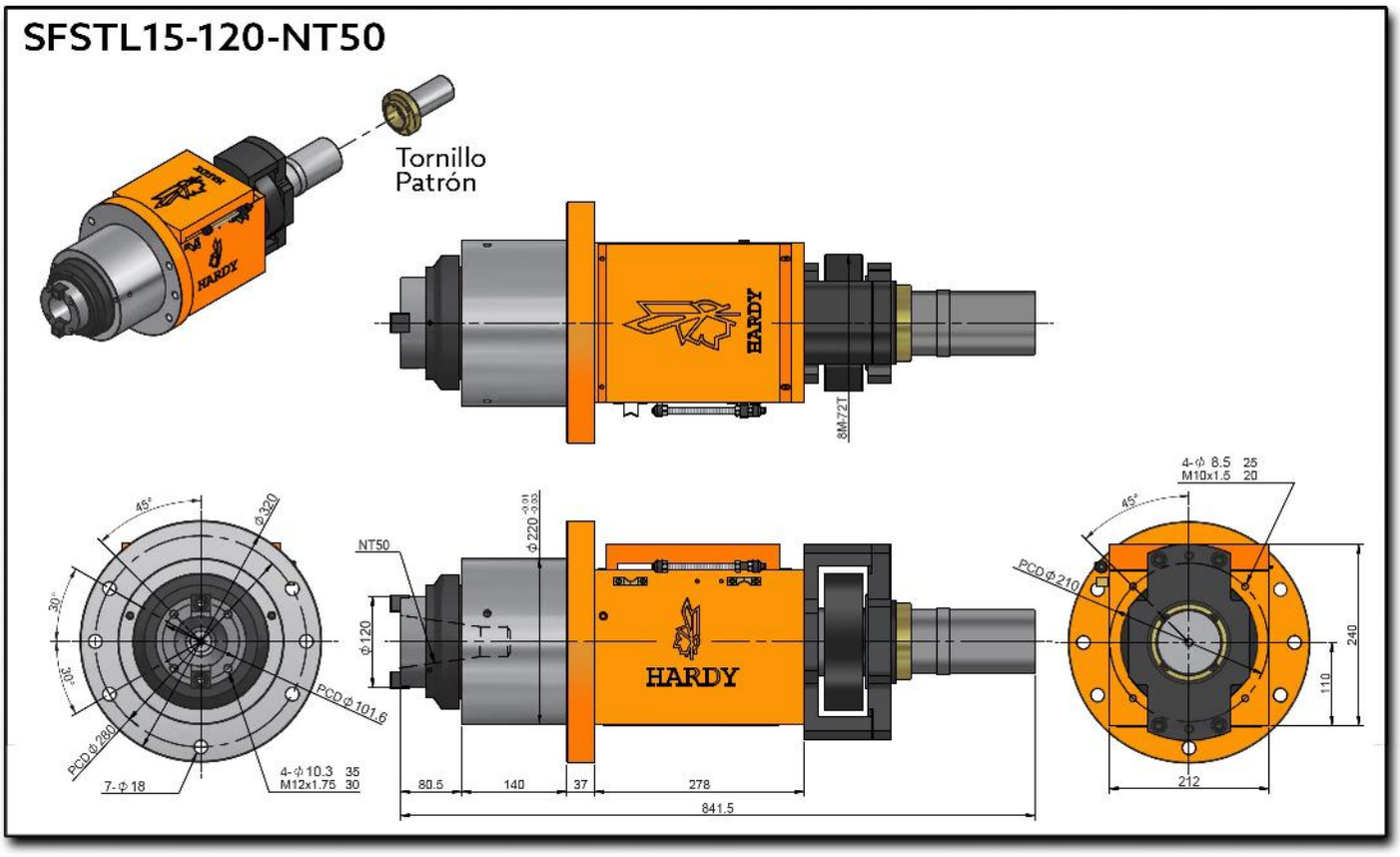
SFSTL15-120-NT50
Tornillo
Patrón
HARDY
8M-72T
45°
Φ320
30°
30°
PCD Φ260
PCD Φ101.6
7-Φ18
4-Φ10.3 35
M12x1.75 30
NT50
Φ220 -0.01 -0.03
Φ120
HARDY
80.5
140
37
278
841.5
4-Φ 8.5 25
M10x1.5 20
45°
PCD Φ210
240
110
212

SM SERIES

BORING/MILLING SERVO COMPACT SPINDLES

SM45-NT30

Boring & Milling
Servo Compact Spindle

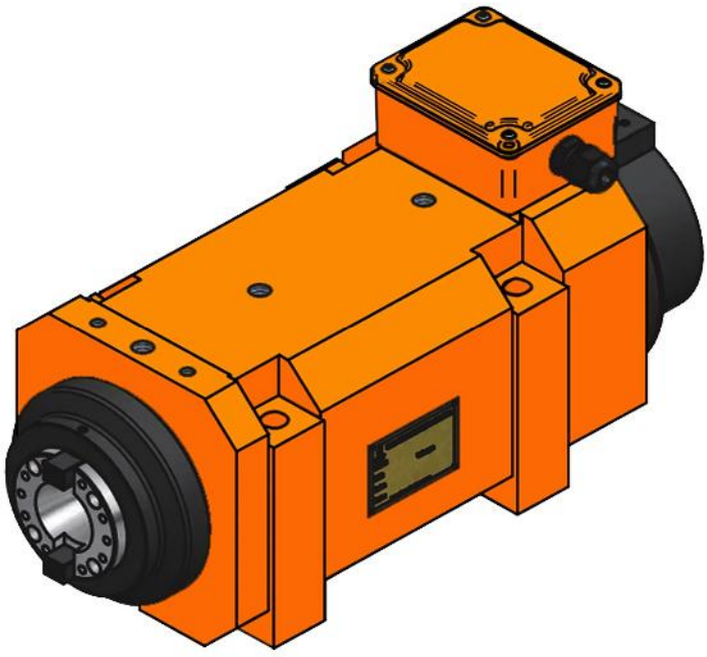

台灣精品 2017
TAIWAN EXCELLENCE

Characteristics & Dimensions

Model	SM45
Spindle Tool Holder	*NT30*
Maximum Speed *(r.p.m.)*	*2,000.00*
Bearings	*6009 | 32009* *6007 | 32007*
Voltage *(Volts)*	*220 / 380*
Current *(Amp)*	*6.60 / 3.80*
Frequency *(Hz)*	*84.00*
Servo Motor Power *(Kw)*	*1.50*
Cooling Media	*Oil Cooling*
Roundness	*Within 0.003*

* ***Oil Colling System*** *is NOT included.*
** ***Servo Driver*** *is included*
*** *All dimensions are given in millimetes.*

SM45-NT30

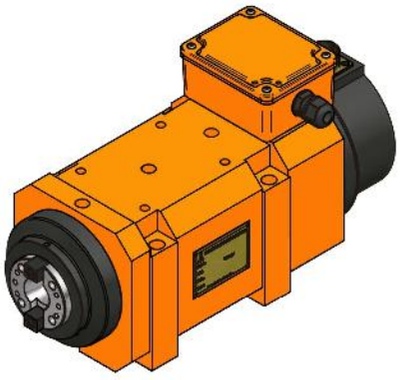

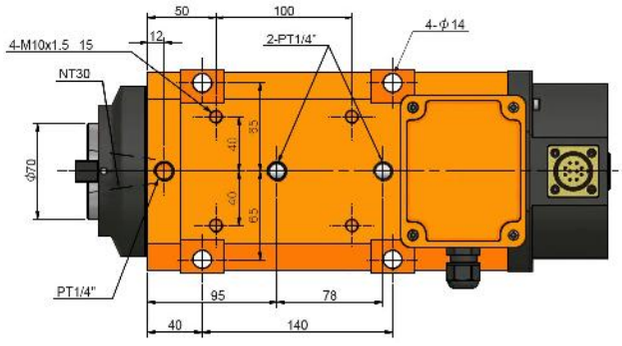
50
100
4-M10x1.5 15
12
2-PT1/4"
4-φ14
NT30
φ70
40
35
40
65
PT1/4"
95
78
40
140

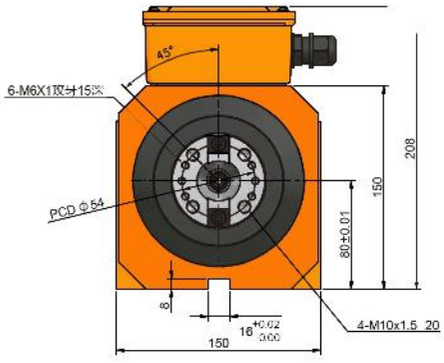
45°
6-M6X1
PCD φ54
208
150
80±0.01
8
16
150
4-M10x1.5 20

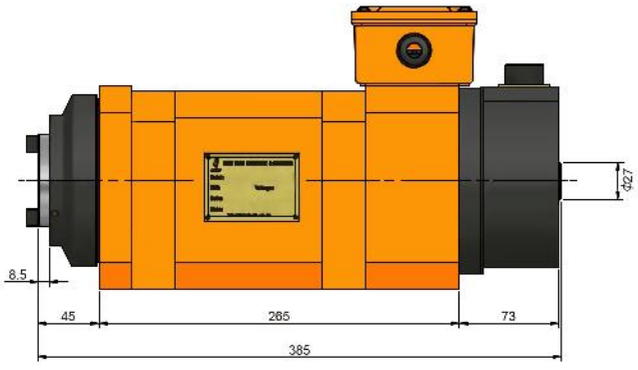
φ27
8.5
45
265
73
385

SM45H-NT30

High Performance Boring & Milling Servo Compact Spindle

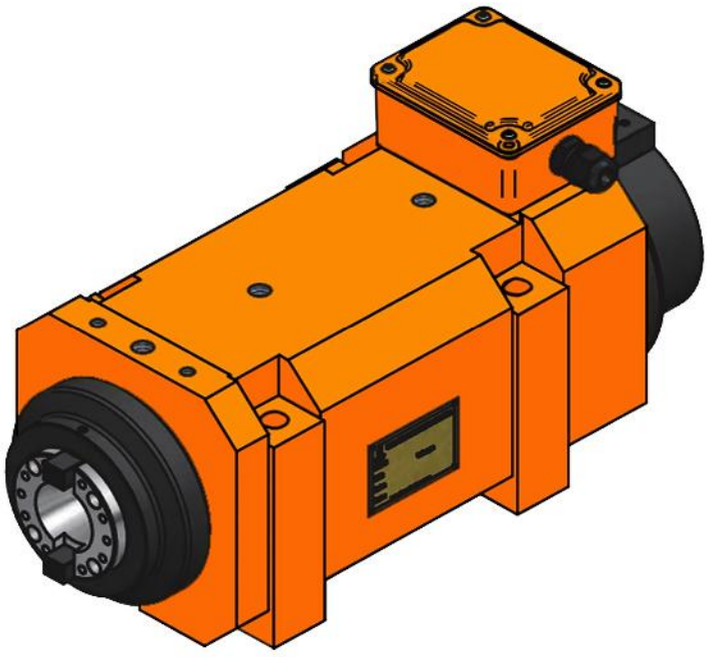

台灣精品 2017
TAIWAN EXCELLENCE

Characteristics & Dimensions

Modelo	SM45H
Spindle Tool Holder	*NT30*
Maximum Speed *(r.p.m.)*	*8,000.00*
Bearings	*7009 x 2* *7007 X 2*
Votage *(Volts)*	*220 / 380*
Current *(Amp)*	*5.40 / 3.20*
Frecuency *(Hz)*	*267.00*
Servo Motor Power *(Kw)*	*1.50*
Cooling Media	*Oil Cooling*
Roundness	*Within 0.003*

* ***Oil Colling System*** *is NOT included.*
** ***Servo Driver*** *is included*
*** *All dimensions are given in millimetes.*

SM45H-NT30

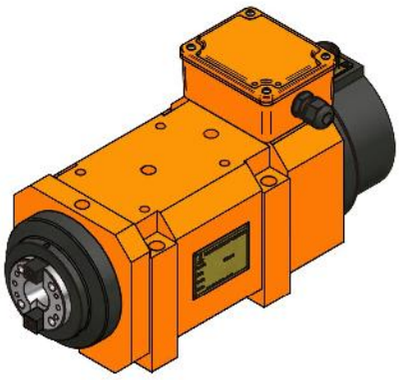

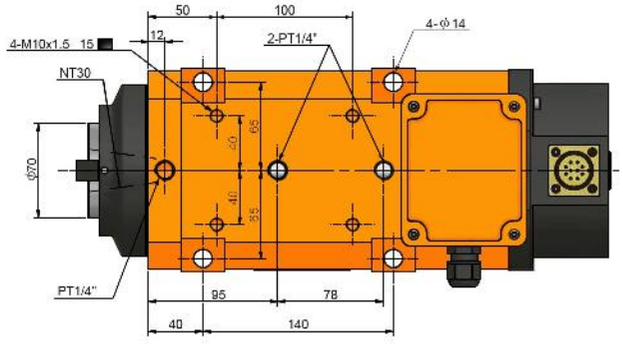
50
100
4-M10x1.5 15
12
2-PT1/4"
4-φ14
NT30
φ70
65
40
35
PT1/4"
95
78
40
140

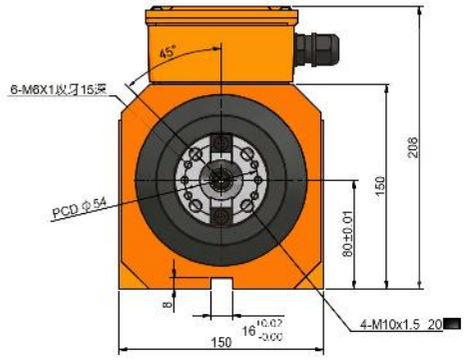
45°
6-M6X1 15
PCD φ54
208
150
80±0.01
8
16
150
4-M10x1.5 20

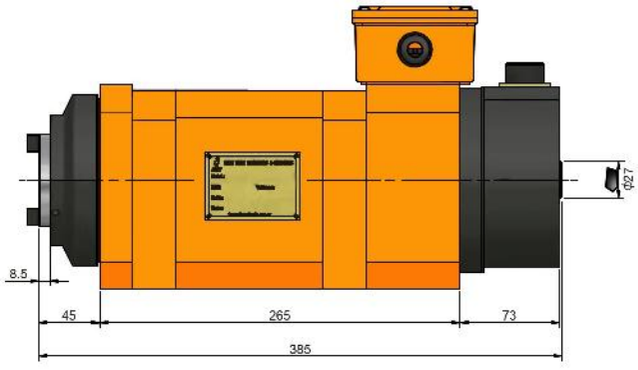
φ27
8.5
45
265
73
385

SM55-NT40

Boring & Milling
Servo Compact Spindle

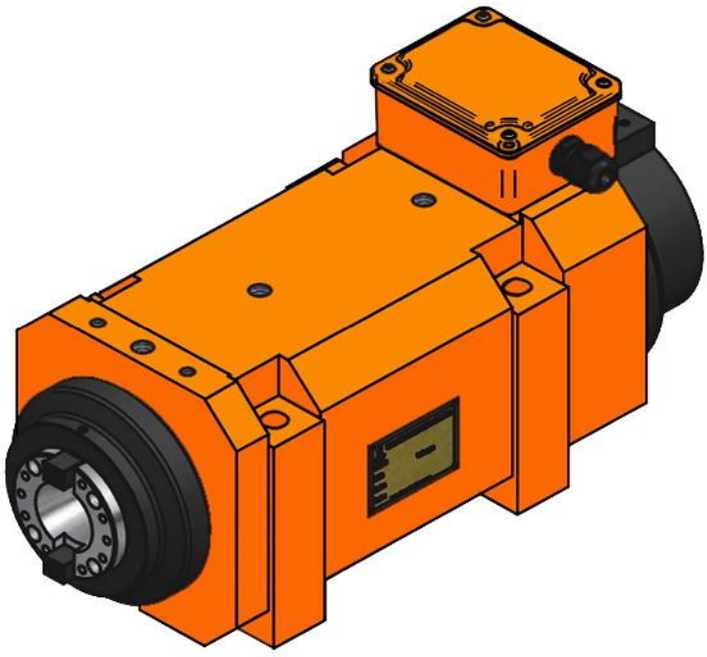

台灣精品 2017
TAIWAN EXCELLENCE

Characteristics & Dimensions

Model	SM55
Spindle Tool Holder	*NT40*
Maximum Speed *(r.p.m.)*	*2,000.00*
Bearings	*32011 x 1 / 6011Z x 1* *32008 x 1 / 6008Z x 1*
Voltage *(Volts)*	*220 / 380*
Current *(Amp)*	*7.90 / 4.50*
Frequency *(Hz)*	*66.60*
Servo Motor Power *(Kw)*	*2.20*
Cooling Media	*Oil Cooling*
Roundness	*Within 0.003*

* ***Oil Colling System*** *is NOT included.*
** ***Servo Driver*** *is included*
*** *All dimensions are given in millimetes.*

SM55-NT40

TOTAL WEIGHT	69 Kg

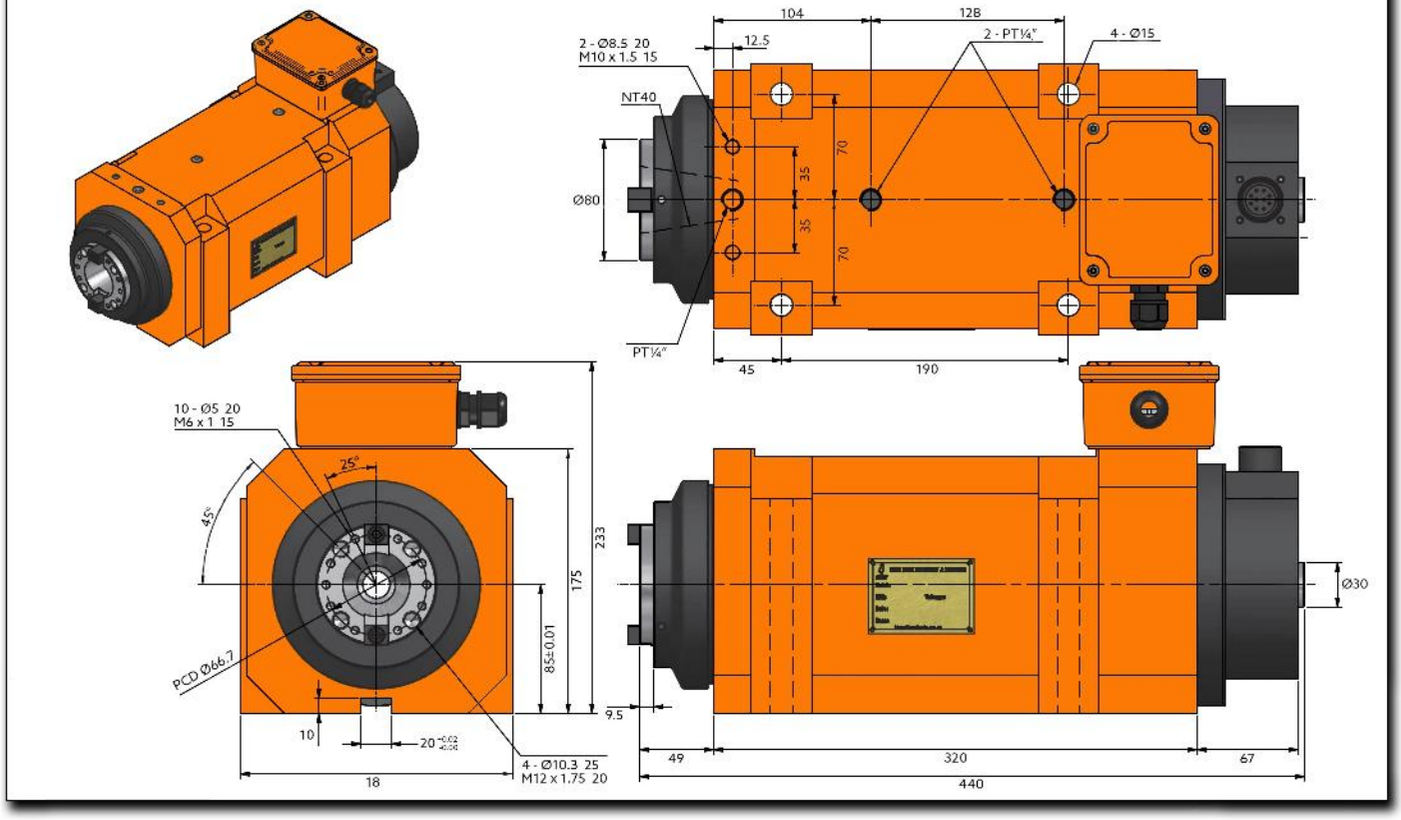

SM55H-NT40

High Performance Boring & Milling Servo Compact Spindle

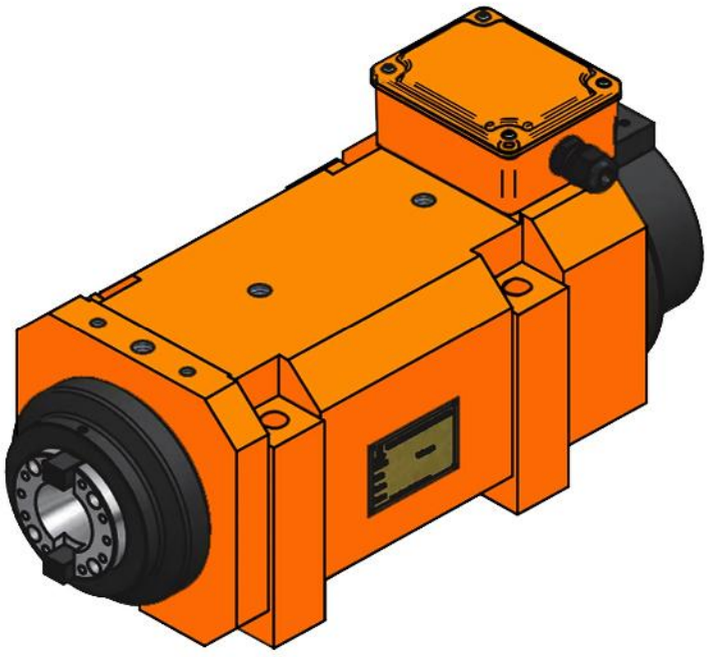

台灣精品 2017
TAIWAN EXCELLENCE

Characteristics & Dimensions

Model	SM55H
Spindle Tool Holder	*NT40*
Maximum Speed *(r.p.m.)*	*6,000.00*
Bearings	*7011 x 2* *7008 x 2*
Votage *(Volts)*	*220 / 380*
Current *(Amp)*	*8.00 / 4.60*
Frecuency *(Hz)*	*200.00*
Servo Motor Power *(Kw)*	*2.20*
Cooling Media	*Oil Cooling*
Roundness	*Within 0.003*

* ***Oil Colling System*** *is NOT included.*
** ***Servo Driver*** *is included*
*** *All dimensions are given in millimetes.*

SM55H-NT40

TOTAL WEIGHT	69 Kg

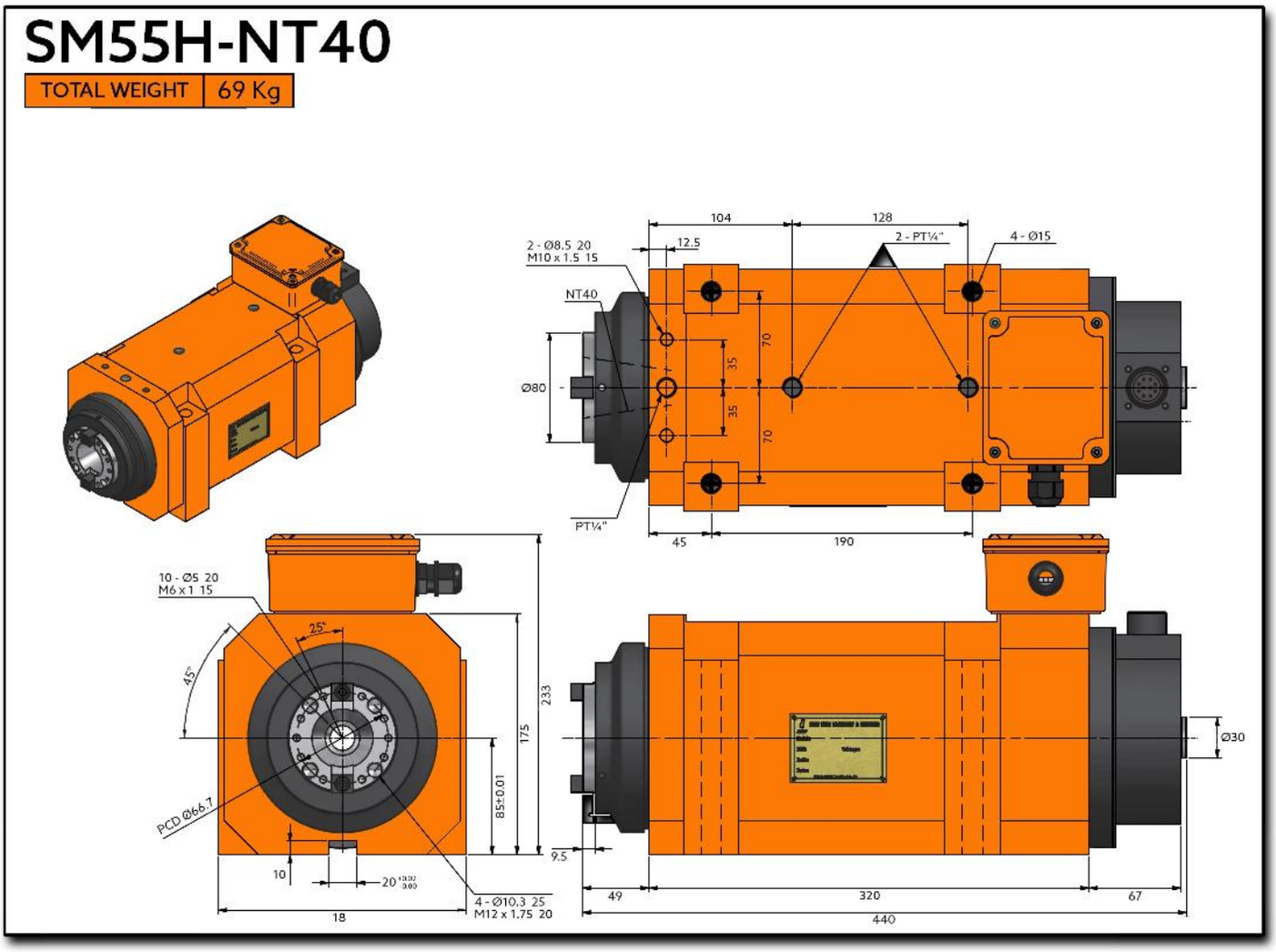

SM80-NT50

Boring & Milling
Servo Compact Spindle

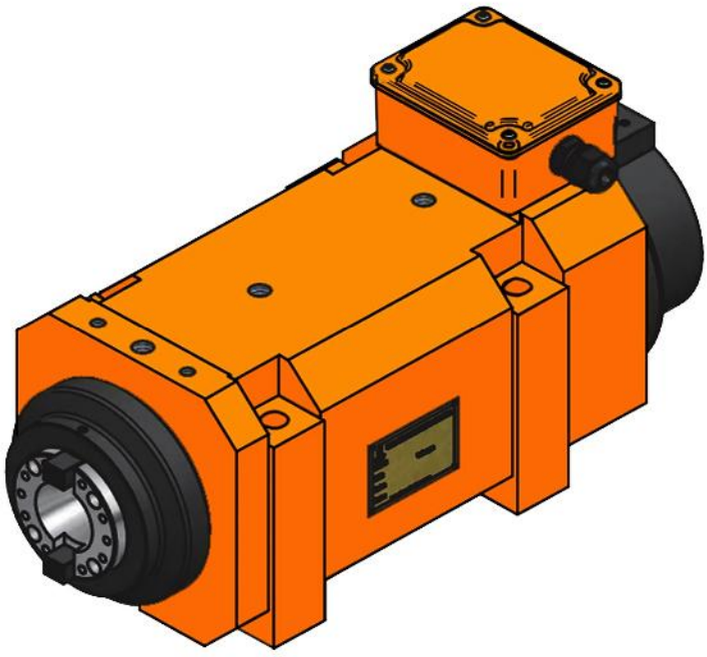

台灣精品 2017
TAIWAN EXCELLENCE

Characteristics & Dimensions

MODEL	SM80
Spindle Tool Holder	*NT50*
Maximum Speed *(r.p.m.)*	*1,500.00*
Bearings	*32211 x 1 / 6211Z x 1* *32218 x 1 / 6218Z x 1*
Votage *(Volts)*	*220Volts / 380 Volts*
Current *(Amp)*	*13.30 Amp. / 7.70 Amp.*
Frecuency *(Hz)*	*40.00*
Servo Motor Power *(Kw)*	*3.70*
Cooling Media	*Oil Cooling*
Roundness	*Within 0.003*

* ***Oil Colling System*** *is NOT included.*
** ***Servo Driver*** *is included*
*** *All dimensions are given in millimetes.*

SM80-NT50

TOTAL WEIGHT	69 Kg

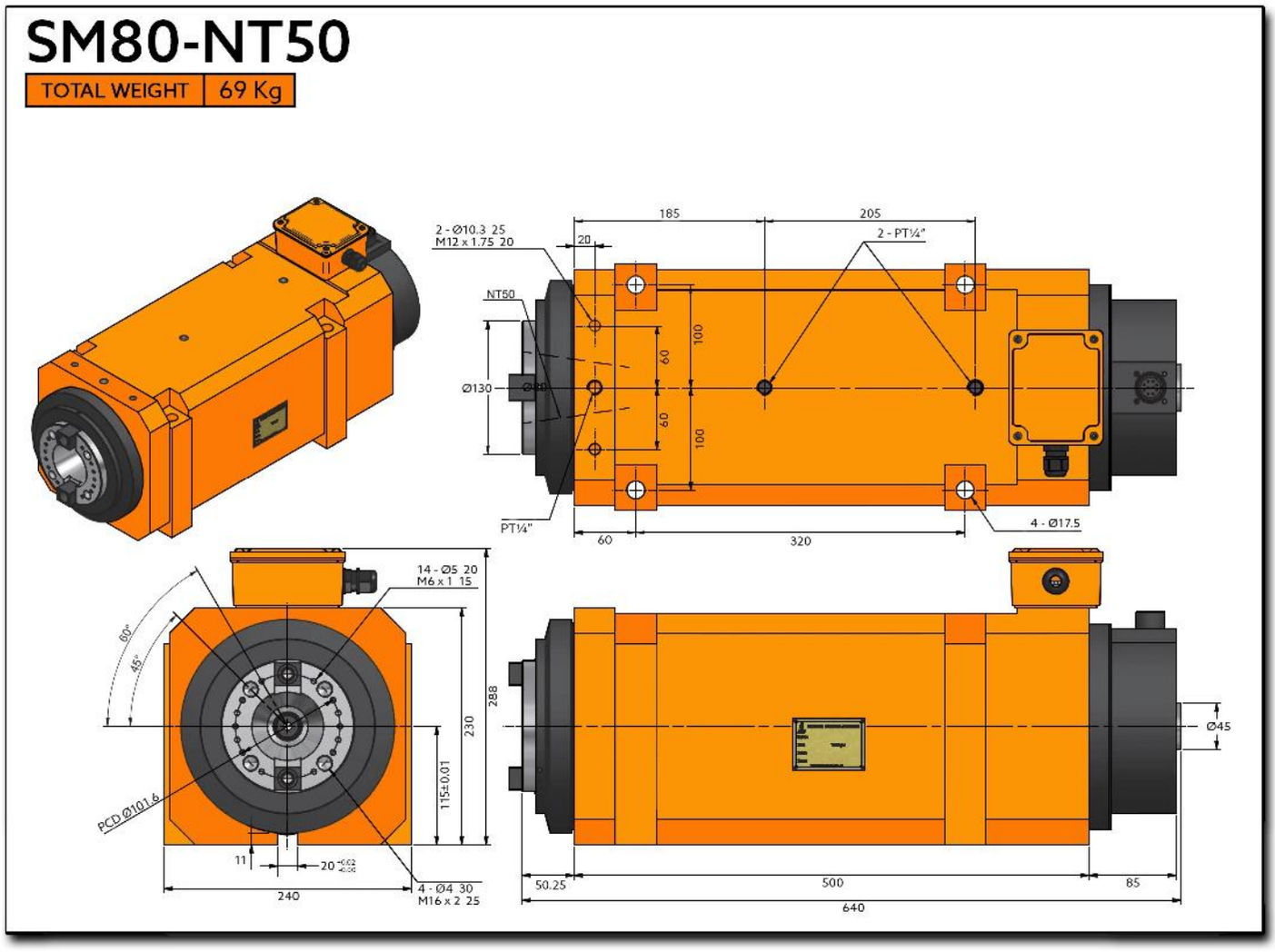

SM80H-NT50

High Performance Boring & Milling Servo Compact Spindle

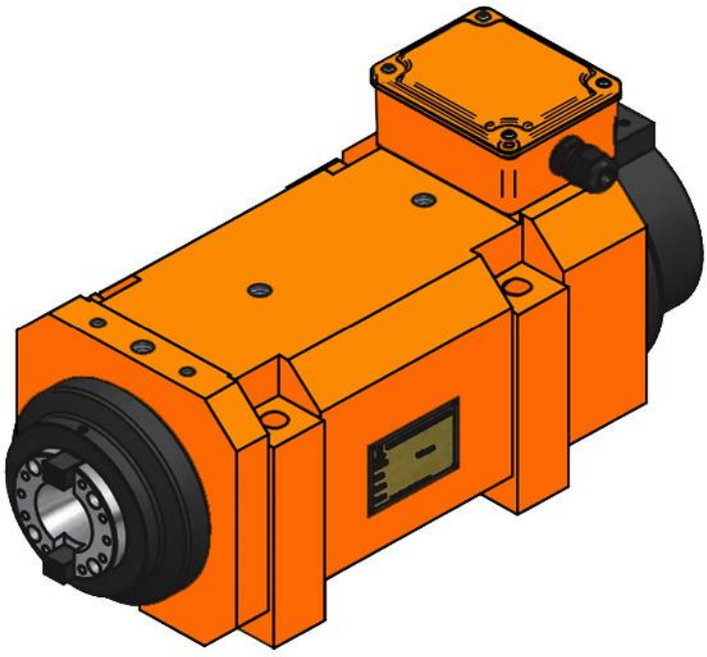

台灣精品 2017
TAIWAN EXCELLENCE

Characteristics & Dimensions

Model	SM80H
Spindle Tool Holder	*NT50*
Maximum Speed *(r.p.m.)*	*2,500.00*
Bearings	*7211 x 2* *7218 x 2*
Voltage *(Volts)*	*220 / 380*
Current *(Amp)*	*13.10 / 7.50*
Frequency *(Hz)*	*83.30*
Servo Motor Power *(Kw)*	*3.70*
Cooling Media	*Oil Cooling*
Roundness	*Within 0.003*

* ***Oil Colling System*** *is NOT included.*
** ***Servo Driver*** *is included*
*** *All dimensions are given in millimetes.*

SM80H-NT50

TOTAL WEIGHT	69 Kg

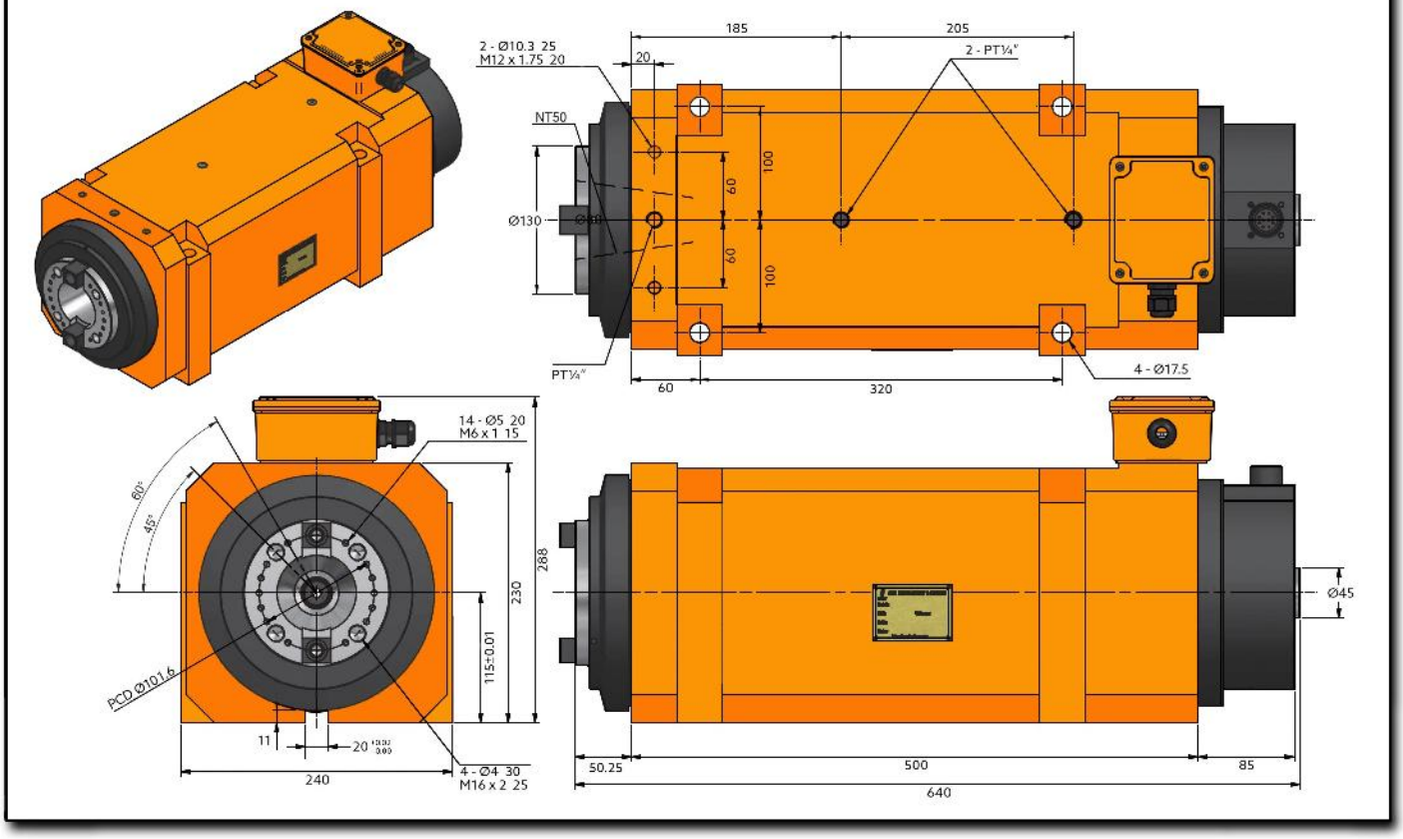

SR SERIES

BORING/MILLING SPINDLES
(ROUND HOUSING)

SR35

Boring & Milling Spindle Head

(Round Housing)

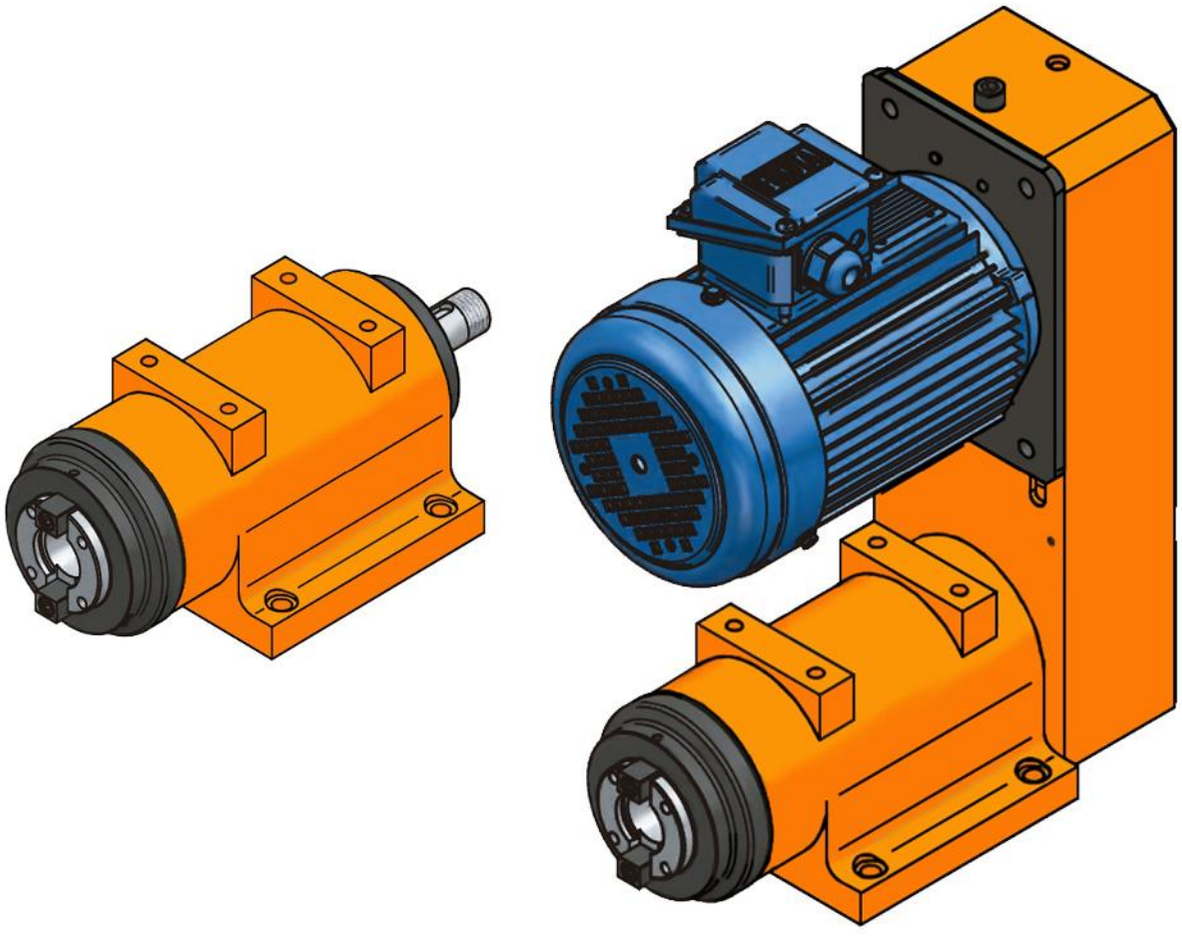

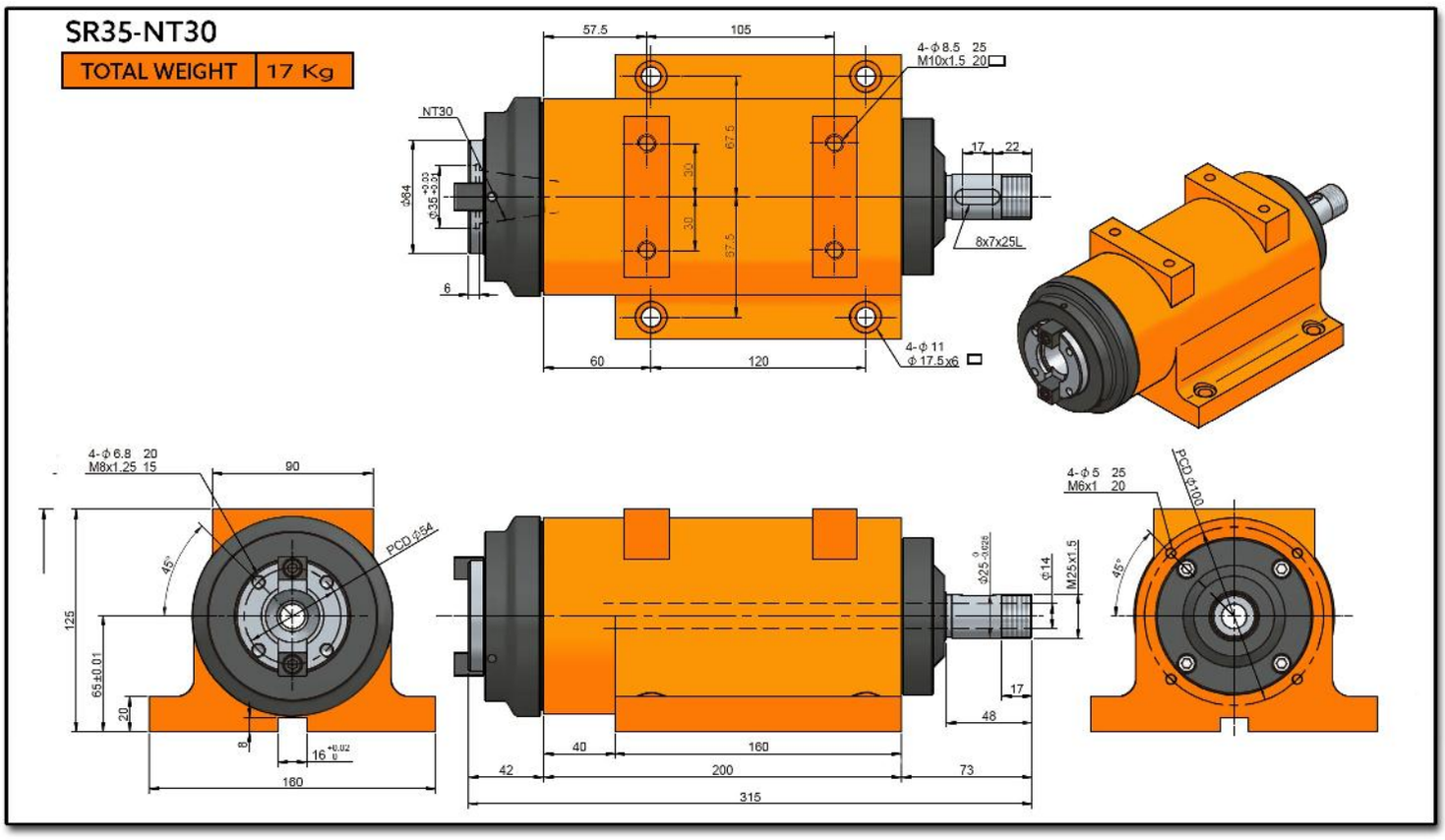
SR35-NT30
TOTAL WEIGHT
17 Kg
57.5
105
4-Φ8.5 25
M10x1.5 20
NT30
Φ84
Φ35
67.5
30
30
67.5
17
22
8x7x25L
6
60
120
4-Φ11
Φ17.5x6
4-Φ6.8 20
M8x1.25 15
90
PCD Φ54
45°
125
65±0.01
20
8
16
160
Φ25
Φ14
M25x1.5
17
48
40
160
42
200
73
315
4-Φ5 25
M6x1 20
PCD Φ100
45°

Characteristics & Dimensions

Model	SR35
Spindle Model	*NT30*
Maximum Speed (r.p.m.)	*3,000*
Bearings Model	*32207 x 1 | 6207Z x 1* *32206 x1 | 6206Z x 1*
Maximum Power	*Within 2 H.p.*
Raising Temperature	*Within 20°C*

**** Roundness: Within 0.003 millimeters.*
*.**** All dimensions are given in millimeters.*

SR35-NT30-MF

TOTAL WEIGHT	43 Kg

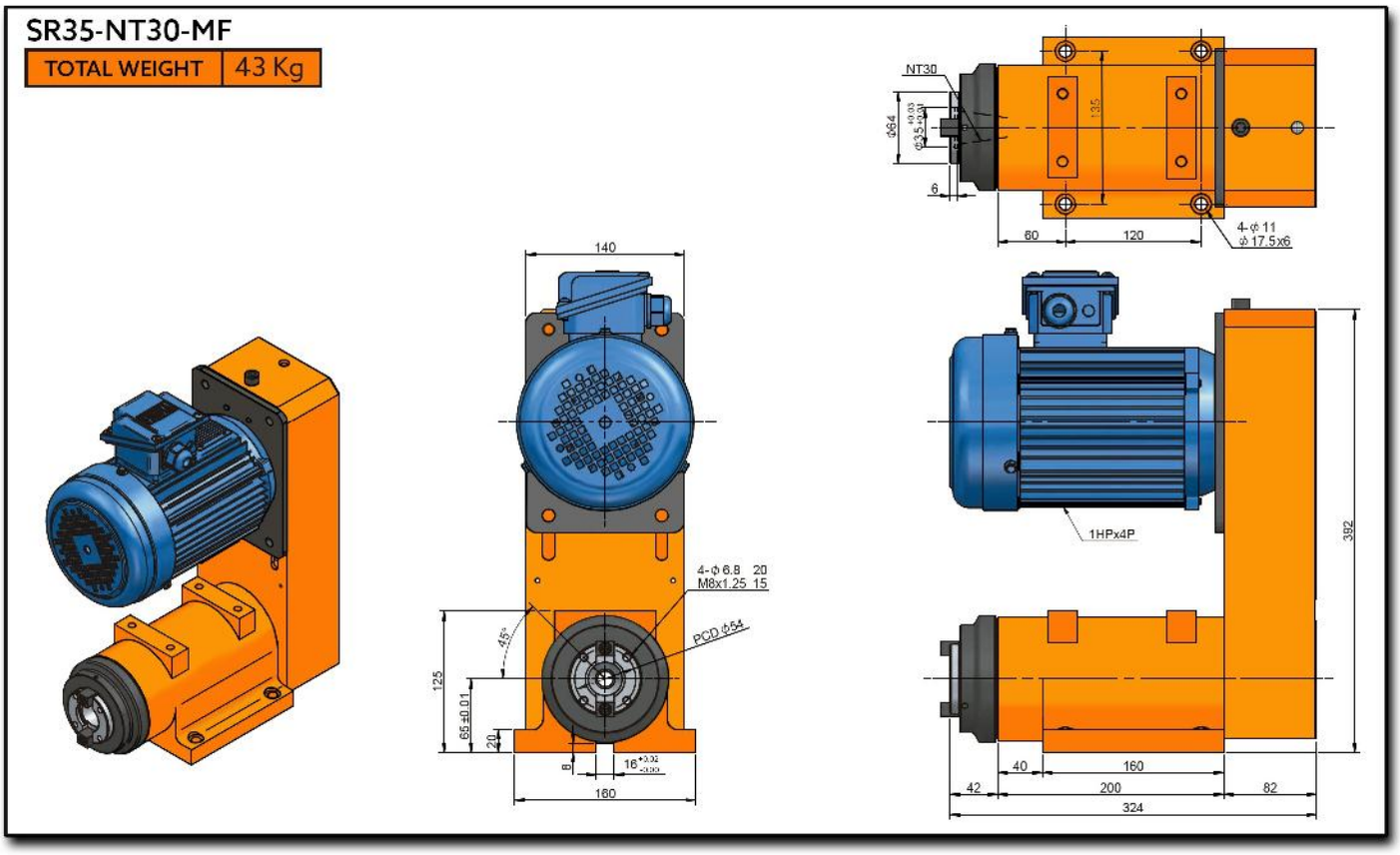

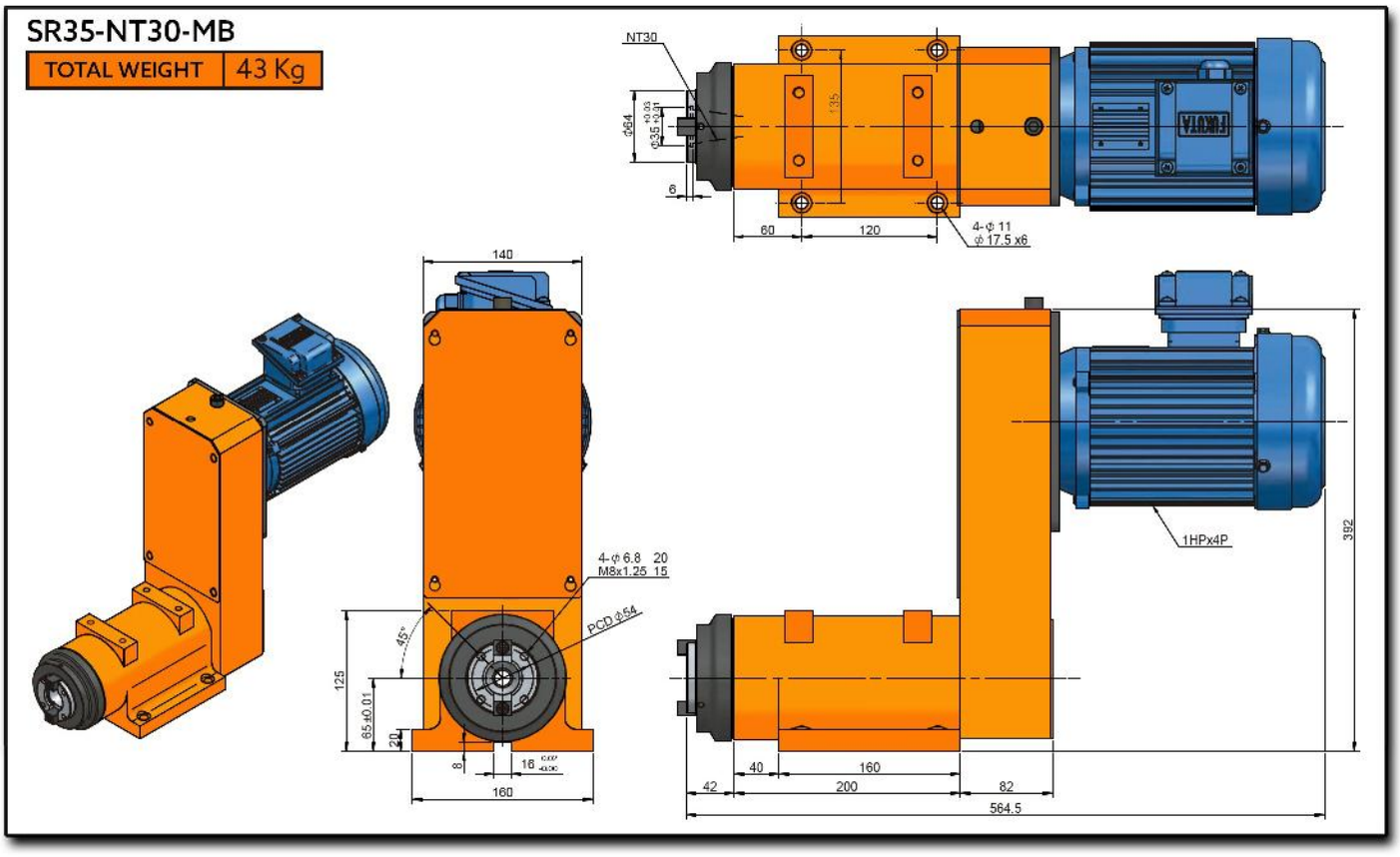
SR35-NT30-MB
TOTAL WEIGHT
43 Kg
NT30
60
120
4-φ 11
φ 17.5 x6
140
4-φ 6.8
M8x1.25
20
15
PCD φ54
45°
125
65±0.01
160
1HPx4P
392
40
160
42
200
82
564.5

SR35H

High Performance Boring & Milling Spindle Head

(Round Housing)

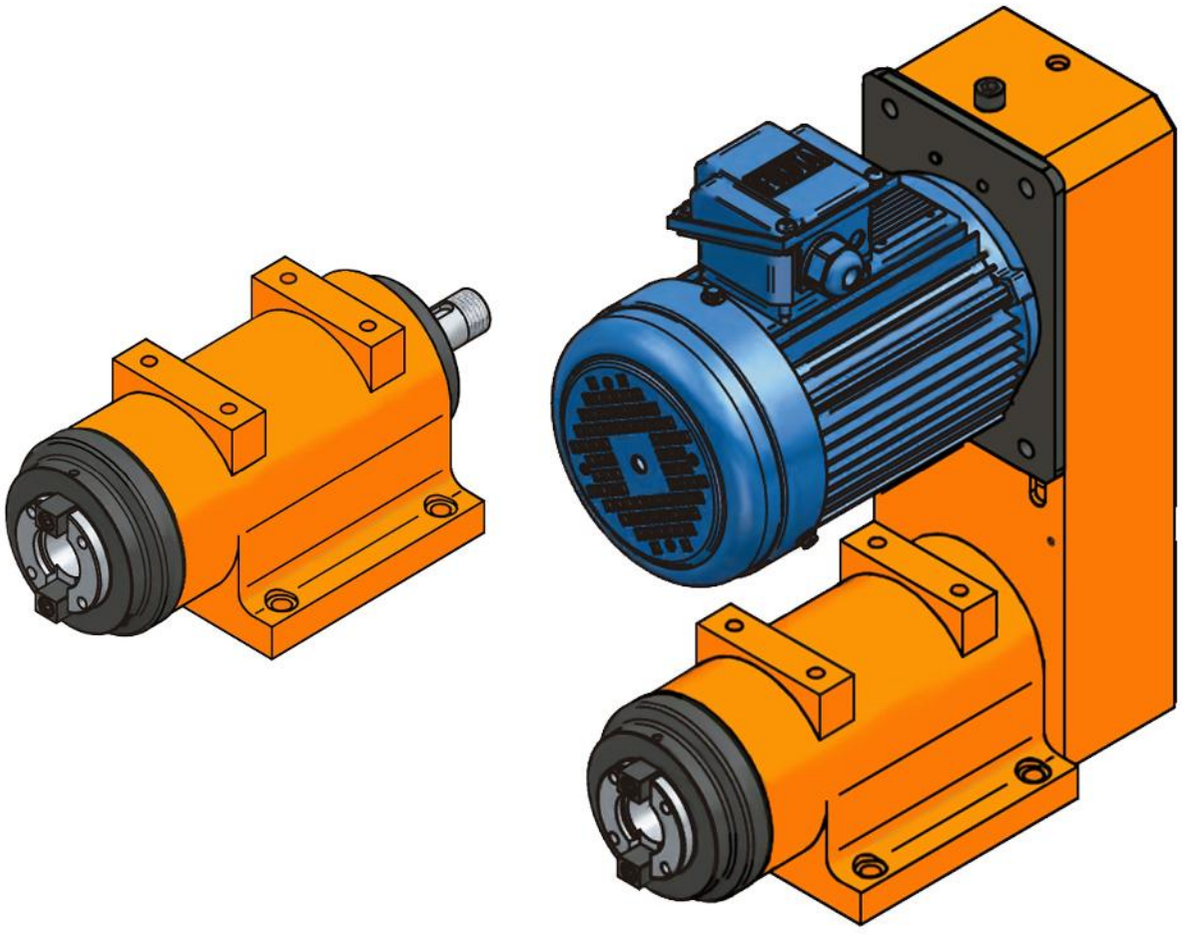

SR35H-NT30-MF

TOTAL WEIGHT	43 Kg

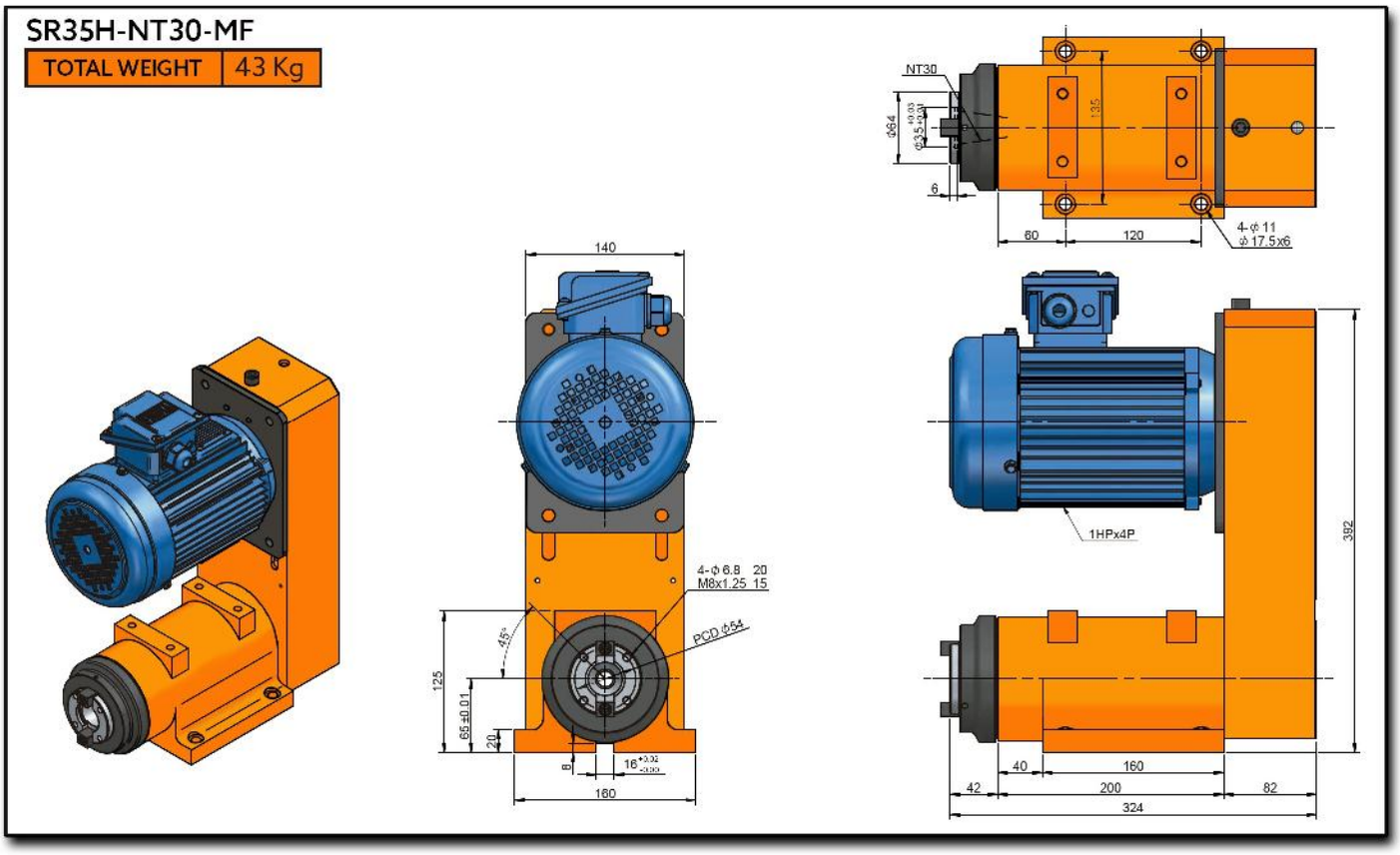

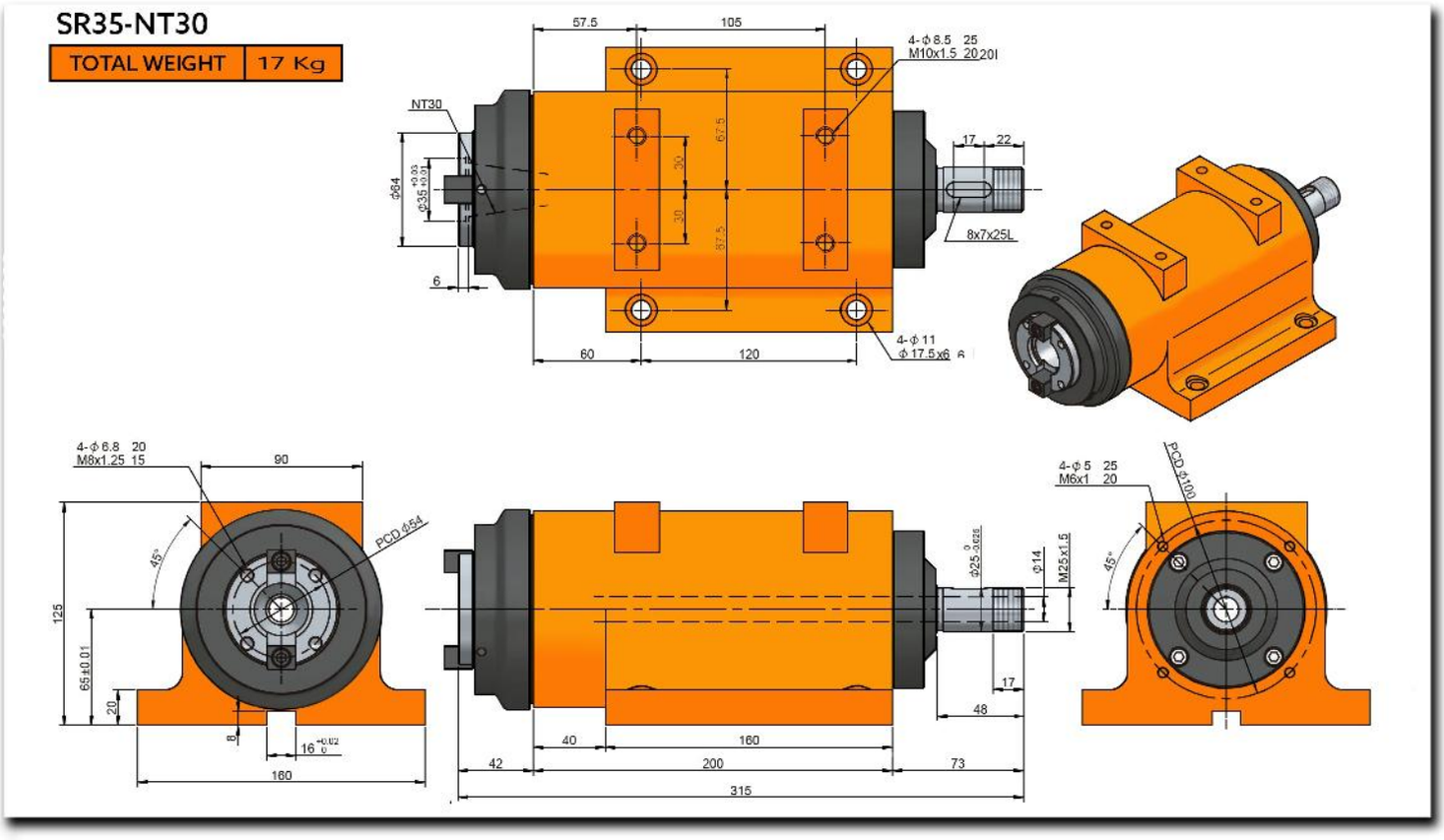
SR35-NT30
TOTAL WEIGHT
17 Kg
57.5
105
4-ϕ8.5 25
M10x1.5 20
NT30
ϕ64
ϕ35
67.5
30
30
87.5
17
22
8x7x25L
6
60
120
4-ϕ11
ϕ17.5x6
4-ϕ6.8 20
M8x1.25 15
90
PCD ϕ54
45°
125
65±0.01
20
8
16
160
ϕ25
ϕ14
M25x1.5
17
48
40
160
42
200
73
315
4-ϕ5 25
M6x1 20
PCD ϕ100
45°

Characteristics & Dimensions

Model	SR35H
Spindle Model	*NT30*
Maximum Speed (r.p.m.)	*10,000*
Bearings Model	*7207 x 2* *7206 x 2*
Maximum Power	*Within 2 H.p.*
Raising Temperature	*Within 20°C*

**** Roundness: Within 0.003 millimeters.*
*.**** All dimensions are given in millimeters.*

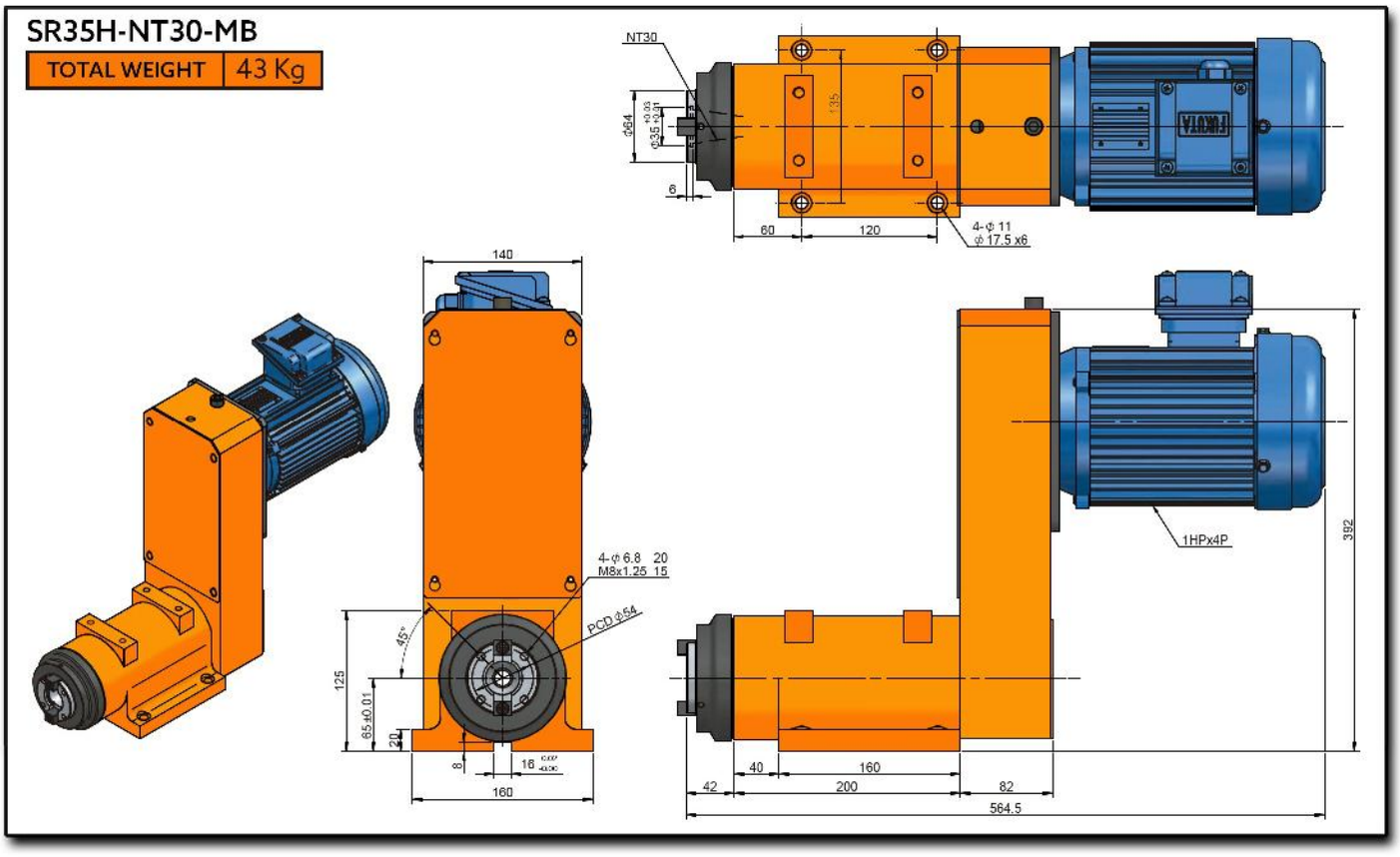
SR35H-NT30-MB
TOTAL WEIGHT
43 Kg
NT30
60
120
4-φ 11
φ 17.5 x6
140
4-φ 6.8 20
M8x1.25 15
PCD φ54
45°
125
65±0.01
160
1HPx4P
392
40
160
42
200
82
564.5

SR45

Boring & Milling Spindle Head

(Round Housing)

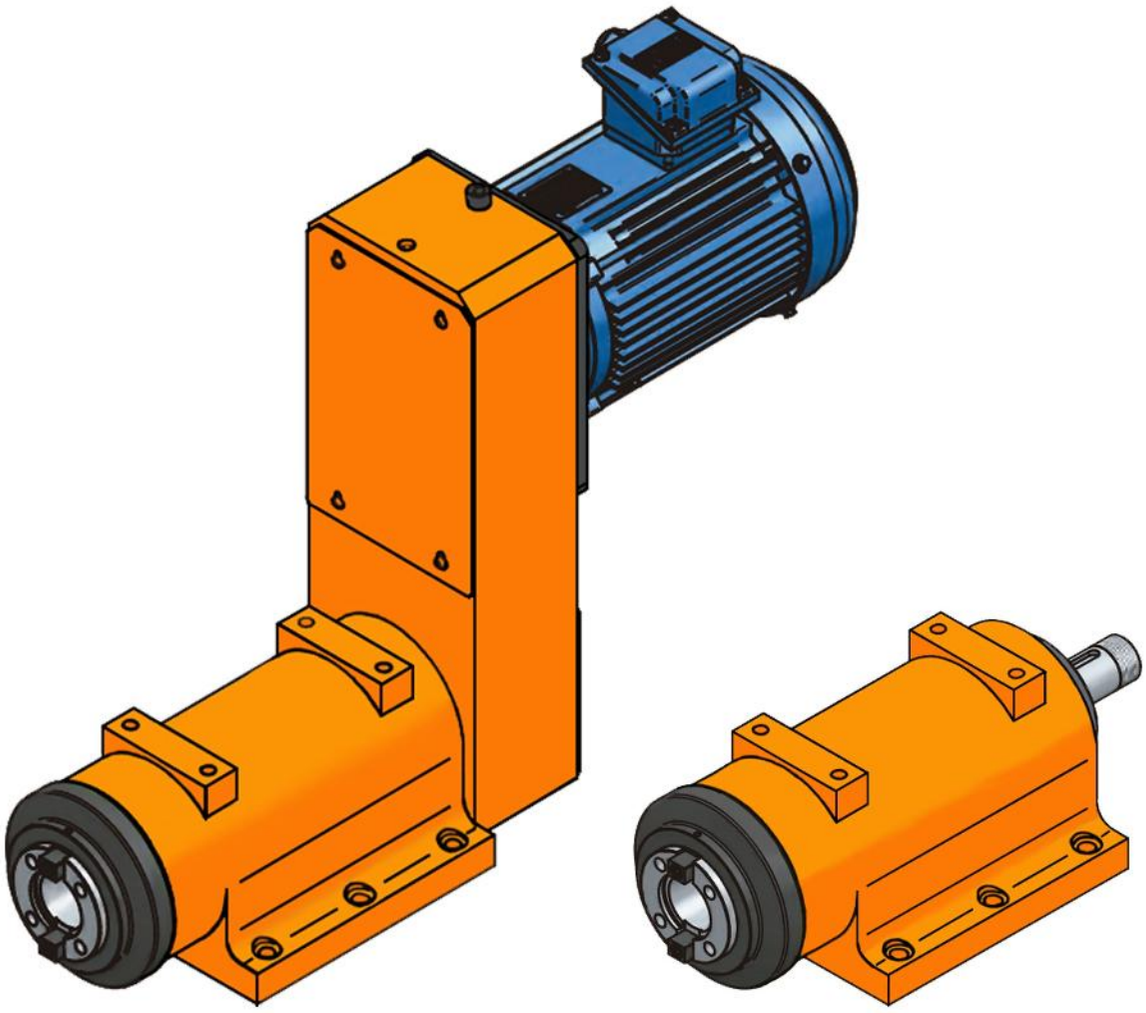

Characteristics & Dimensions

Model	SR45
Spindle Model	*NT40*
Maximum Speed (r.p.m.)	*2,000*
Bearings Model	*32209 x 1 | 6209Z x 1* *32208 x 1 | 6208Z x 1*
Maximum Power	*Within 3 H.p.*
Raising Temperature	*Within 20°C*

**** Roundness: Within 0.003 millimeters.*
*.**** All dimensions are given in millimeters.*

SR45-NT40

Peso Total	35 Kg

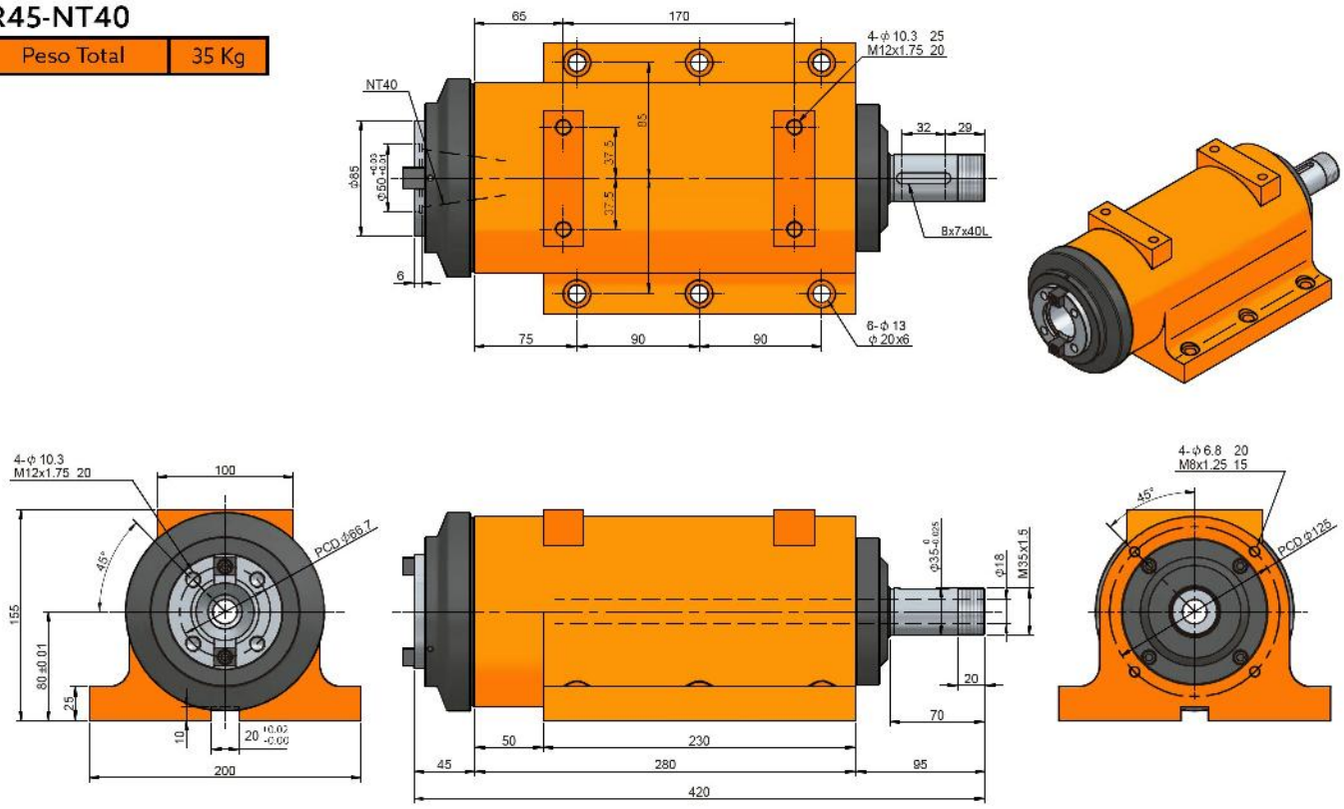

SR45-NT40-MF

TOTAL WEIGHT	72 Kg

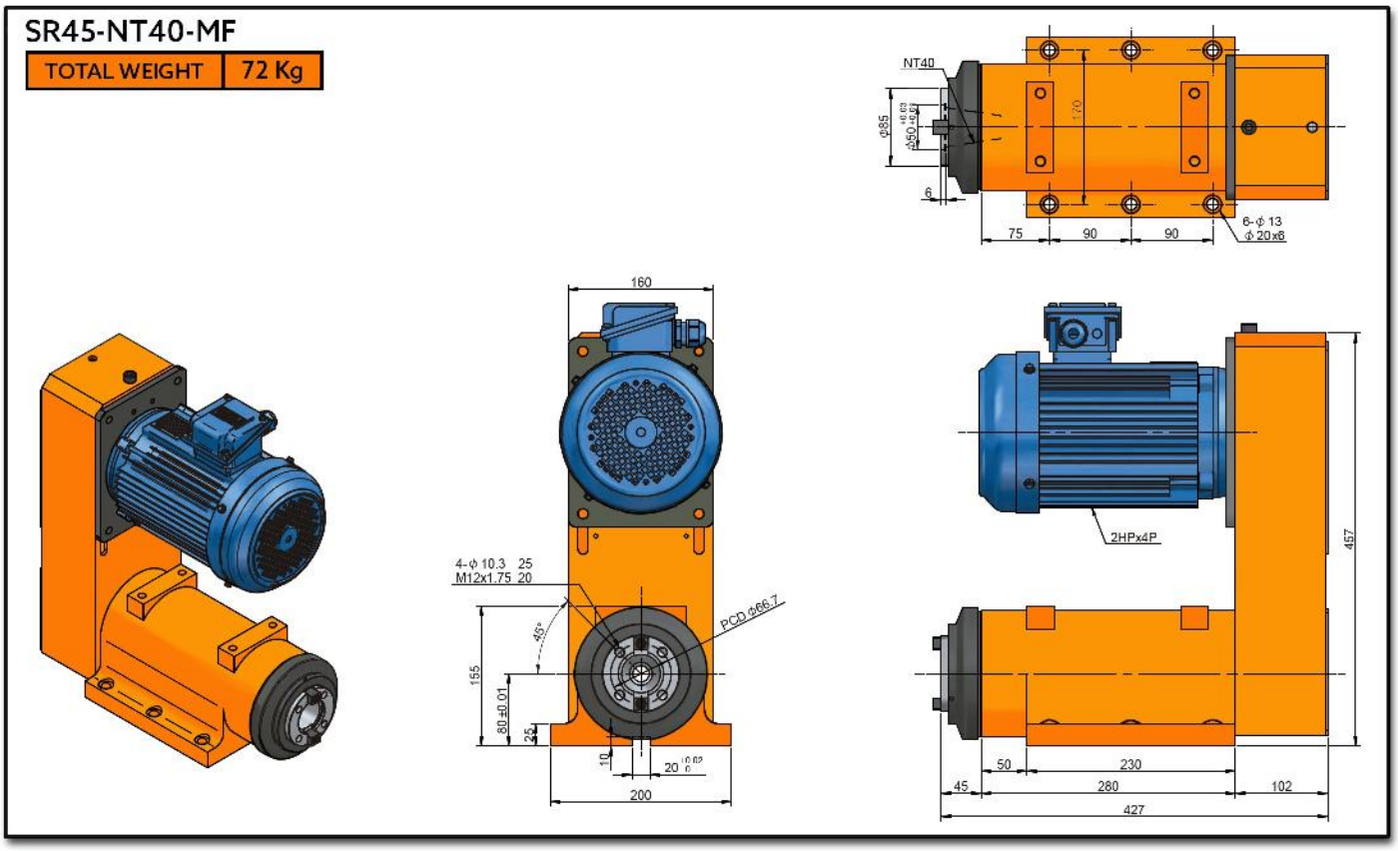

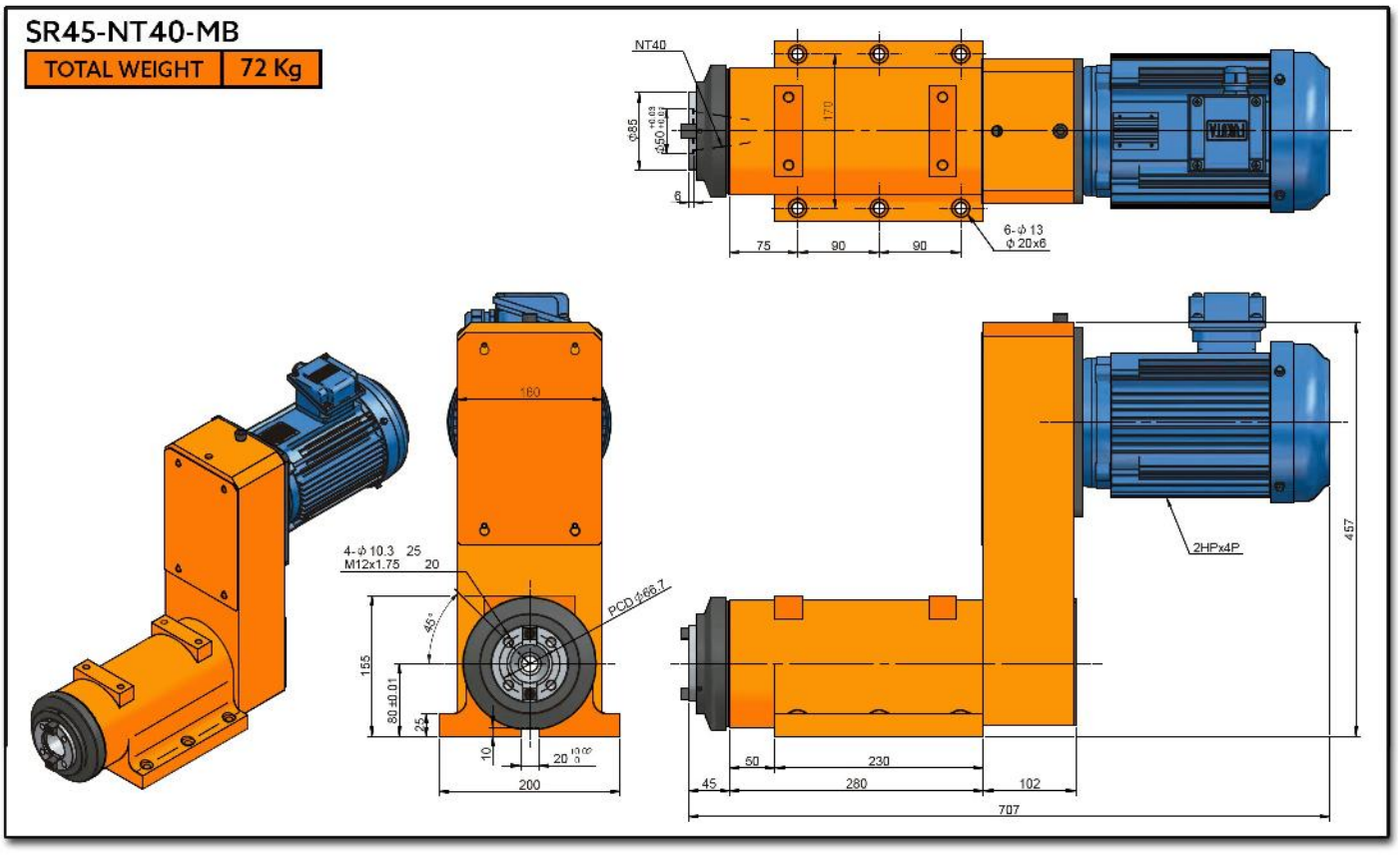
SR45-NT40-MB
TOTAL WEIGHT
72 Kg
NT40
Φ85
Φ50 +0.03 +0.02
6
170
75
90
90
6-φ 13
Φ 20x6
180
4-φ 10.3 25
M12x1.75 20
45°
PCD 166.7
155
80 ±0.01
24
10
20 +0.05 0
200
2HPx4P
457
50
230
45
280
102
707

SR45H

High Performance Boring & Milling Spindle Head

(Round Housing)

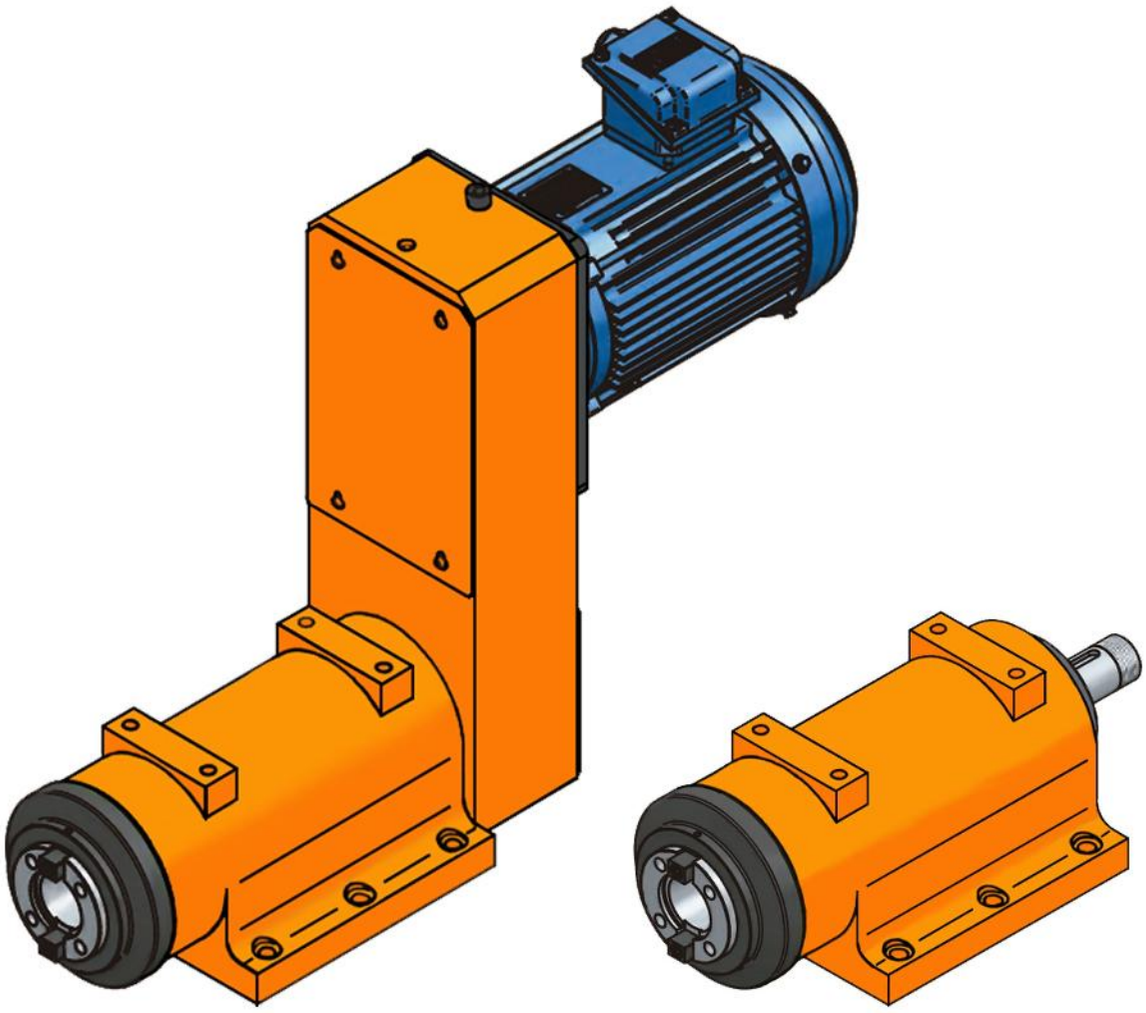

SR45H-NT40-MF

TOTAL WEIGHT	72 Kg

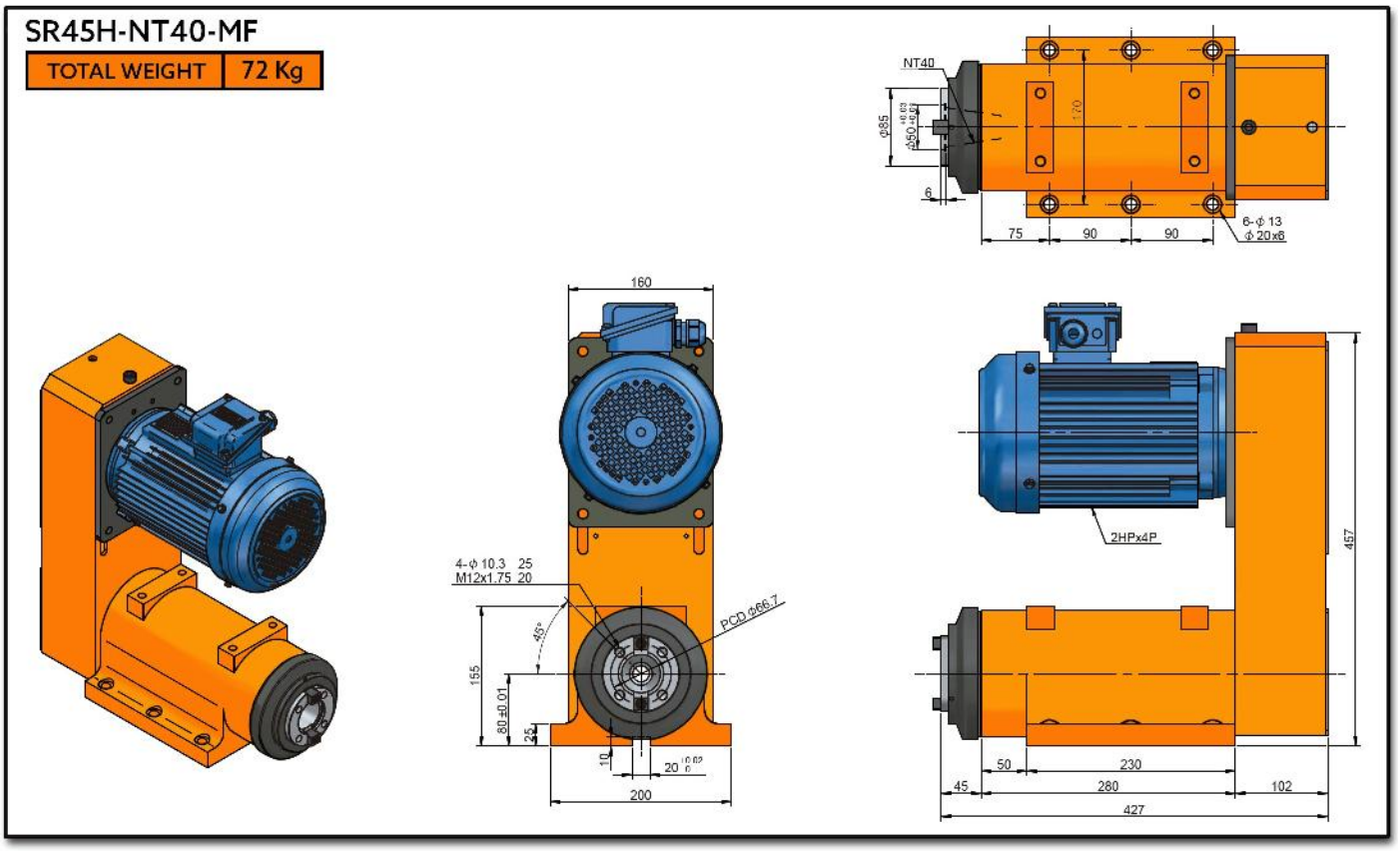

SR45H-NT40

TOTAL WEIGHT	35 Kg

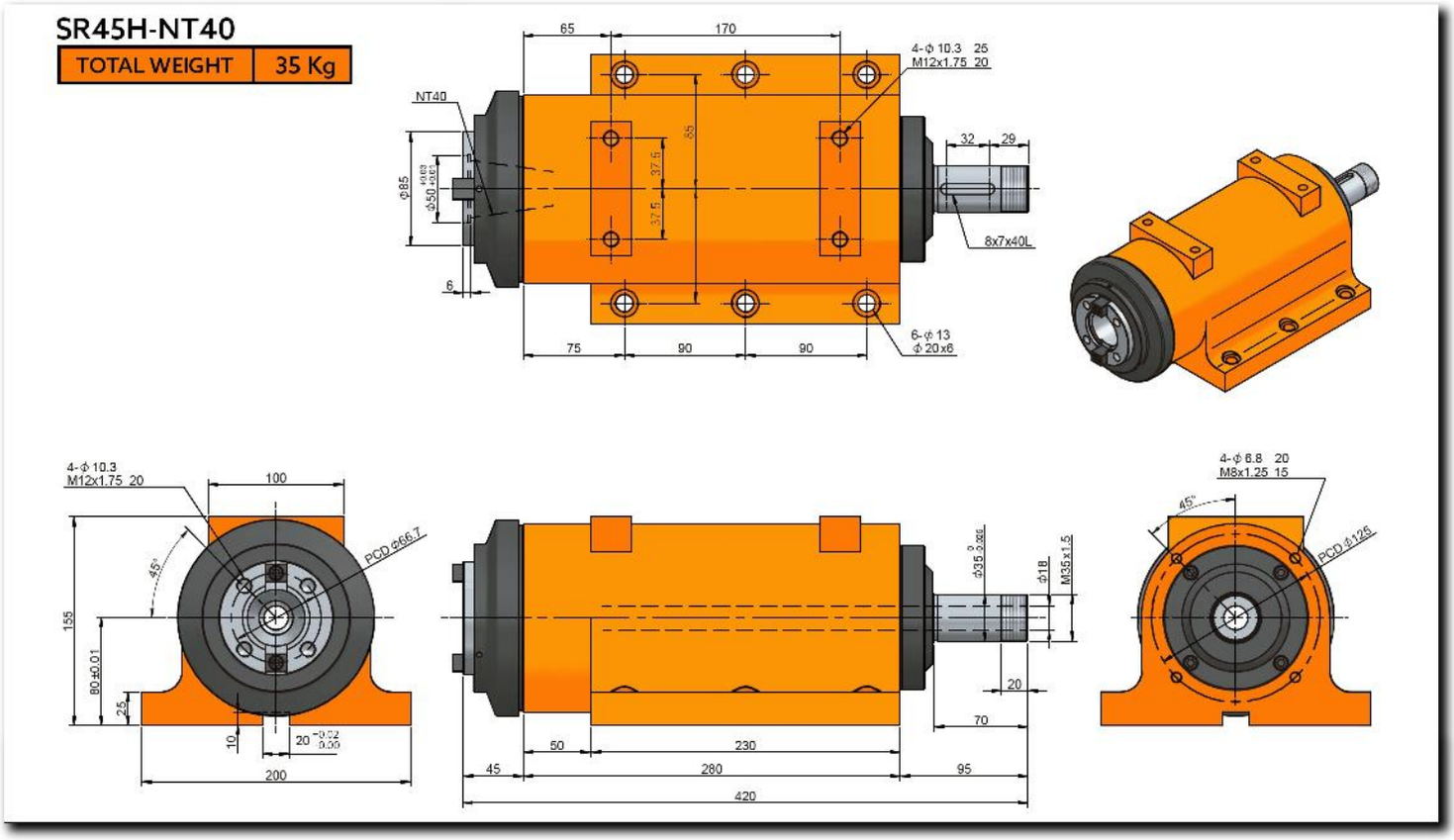

Characteristics & Dimensions

Model	SR45H
Spindle Model	*NT40*
Maximum Speed (r.p.m.)	*6,000*
Bearings Model	*7209 x 2* *7208 x 2*
Maximum Power	*Within 3 H.p.*
Raising Temperature	*Within 20°C*

**** Roundness: Within 0.003 millimeters.*
*.**** All dimensions are given in millimeters.*

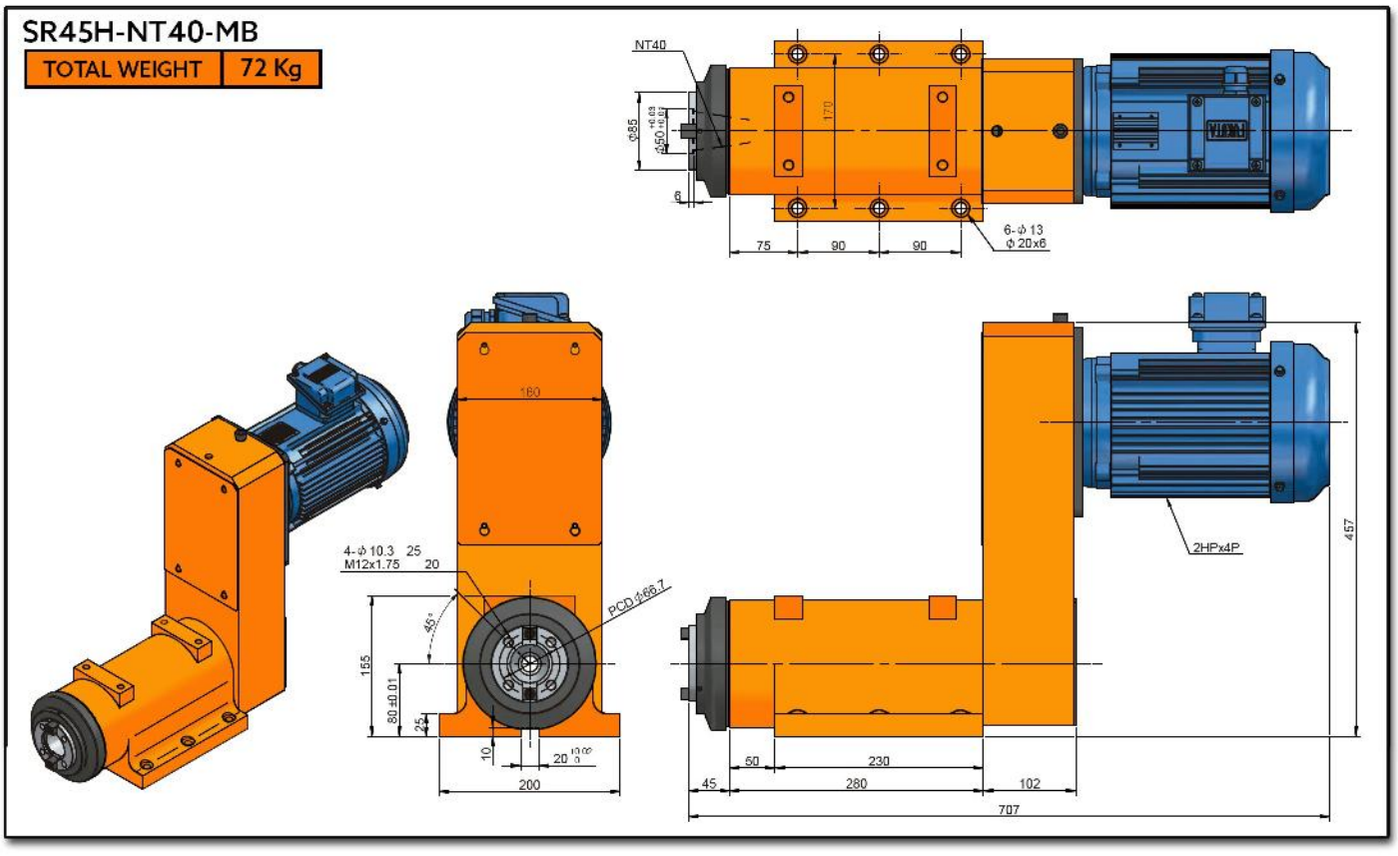
SR45H-NT40-MB
TOTAL WEIGHT
72 Kg
NT40
170
75
90
90
6-ϕ 13
ϕ 20x6
160
4-ϕ 10.3 25
M12x1.75 20
PCD ϕ66.7
45°
155
80±0.01
25
10
200
2HPx4P
457
50
230
45
280
102
707

SR60

Boring & Milling Spindle Head

(Round Housing)

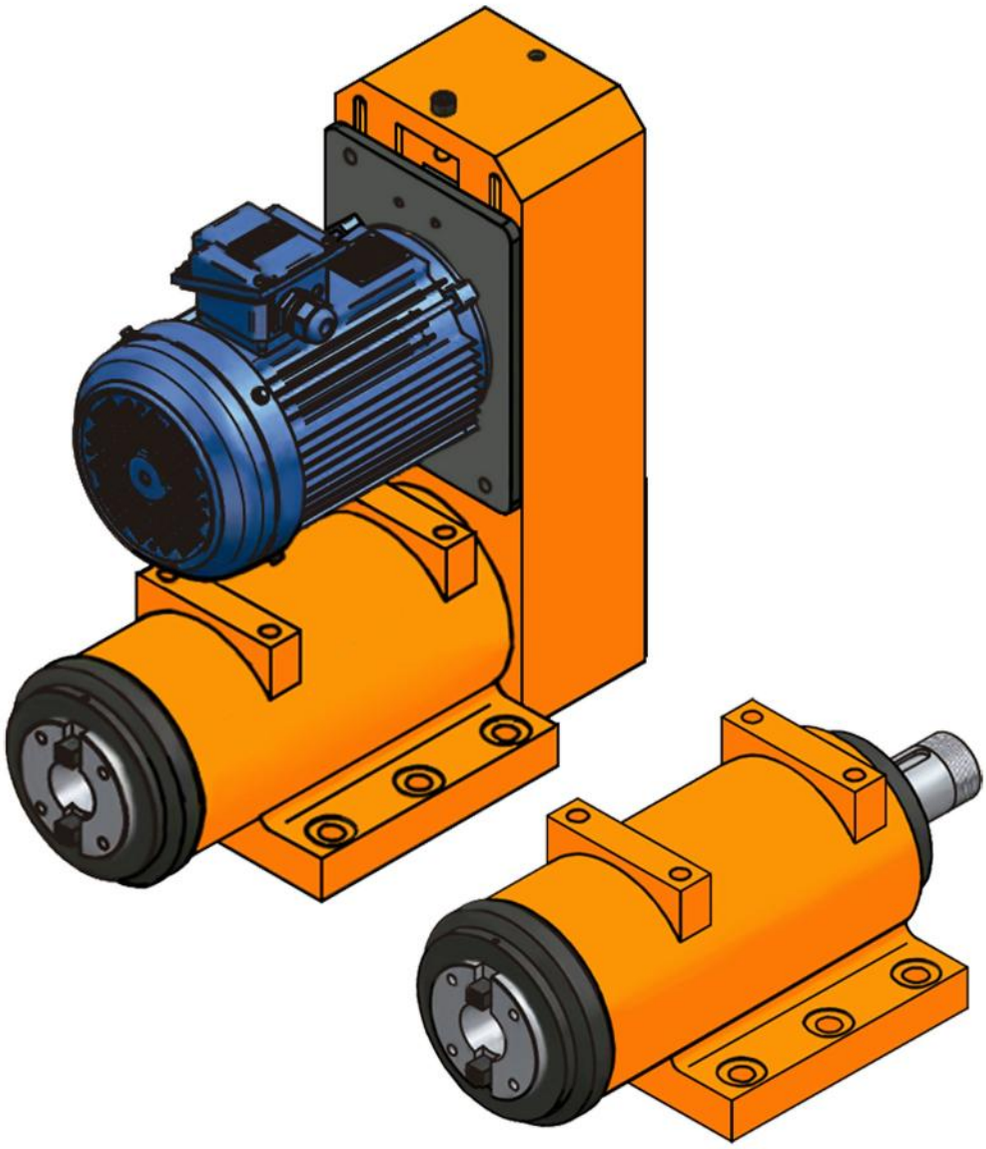

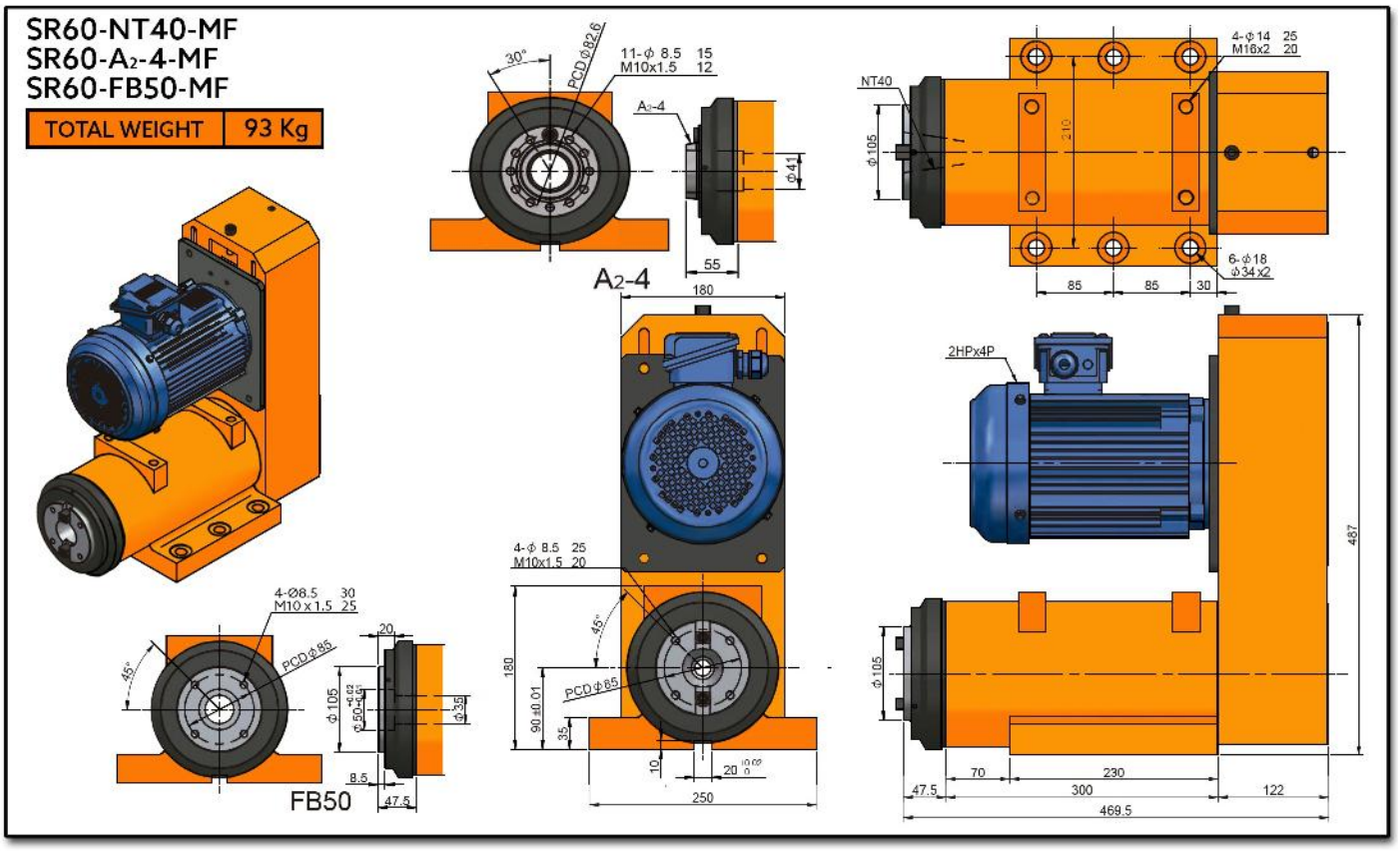
SR60-NT40-MF
SR60-A2-4-MF
SR60-FB50-MF
TOTAL WEIGHT
93 Kg
A2-4
FB50
2HPx4P
NT40

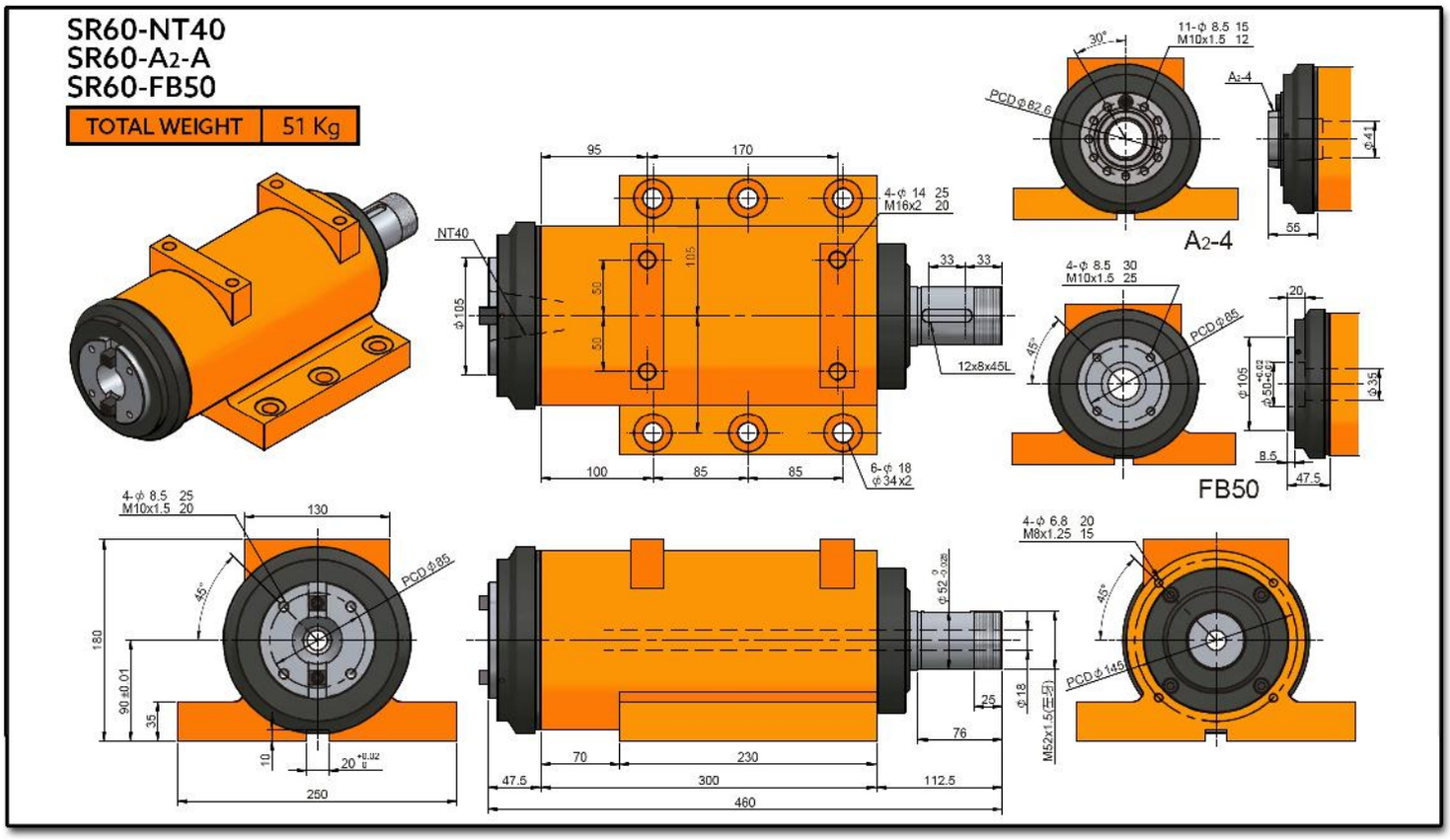
SR60-NT40
SR60-A2-A
SR60-FB50
TOTAL WEIGHT
51 Kg
NT40
A2-4
FB50
12x8x45L
PCD ϕ82.6
PCD ϕ85
PCD ϕ145
4-ϕ 14 25
M16x2 20
6-ϕ 18
ϕ34x2
11-ϕ 8.5 15
M10x1.5 12
4-ϕ 8.5 30
M10x1.5 25
4-ϕ 8.5 25
M10x1.5 20
4-ϕ 6.8 20
M8x1.25 15
M52x1.5(三号)
95
170
100
85
85
33
33
130
180
250
70
230
300
460
47.5
112.5
76
25
55
20
8.5
47.5
45°
30°

Characteristics & Dimensions

Model	SR60
Spindle Model	*NT40 - A2-4 - FB50*
Maximum Speed (r.p.m.)	*1,800*
Bearings Model	*32211 | 6211Z* *32212 | 6212Z*
Maximum Power	*Within 5 H.p.*
Raising Temperature	*Within 20°C*

**** Roundness: Within 0.003 millimeters.*
*.**** All dimensions are given in millimeters.*

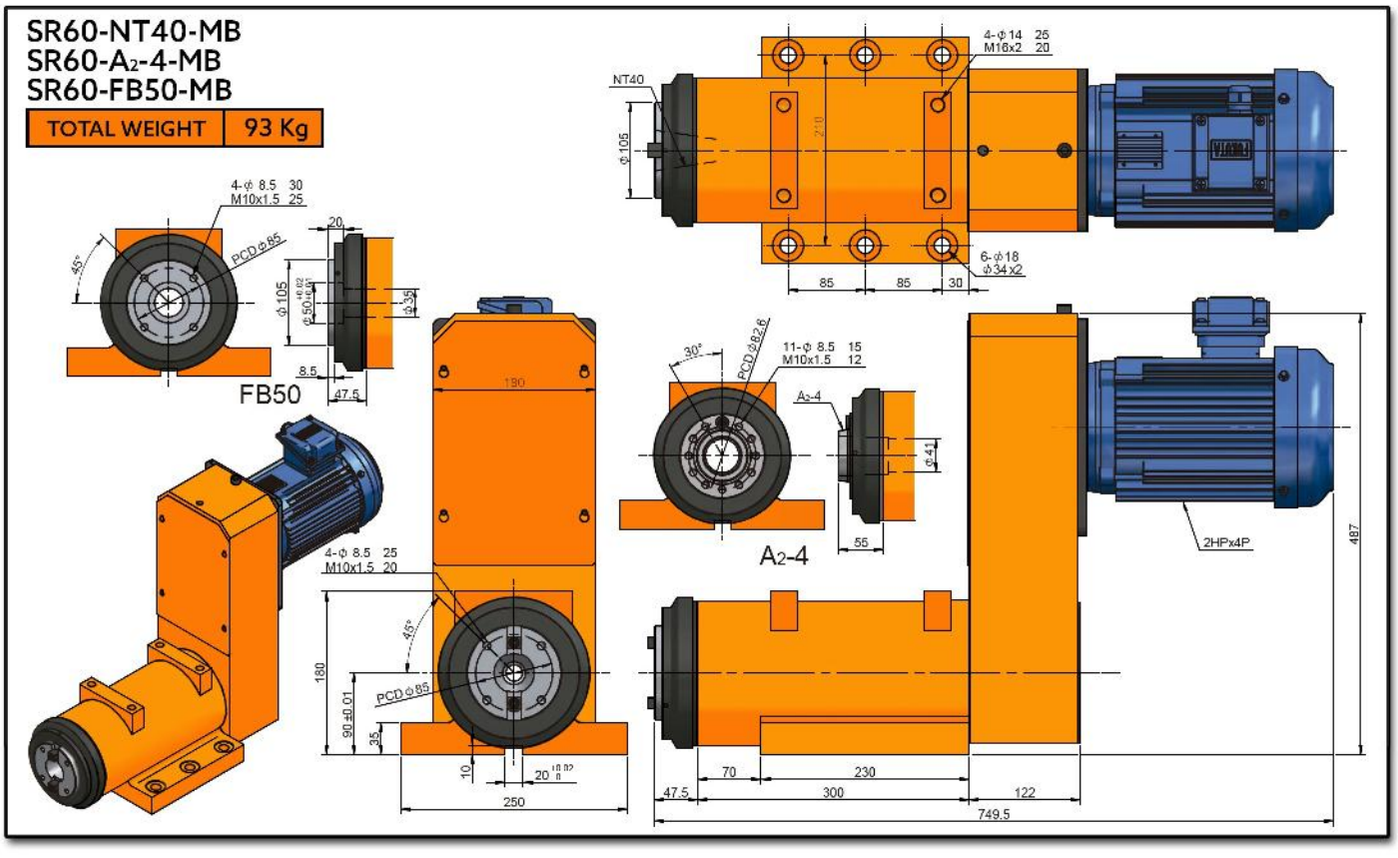
SR60-NT40-MB
SR60-A2-4-MB
SR60-FB50-MB
TOTAL WEIGHT
93 Kg
NT40
4-Φ14 25
M16x2 20
Φ105
2*10
85
85
30
6-Φ18
Φ34x2
4-Φ 8.5 30
M10x1.5 25
PCD Φ85
45°
20
Φ105
Φ50
Φ35
8.5
47.5
FB50
190
30°
PCD Φ62.6
11-Φ 8.5 15
M10x1.5 12
A2-4
Φ41
55
2HPx4P
487
4-Φ 8.5 25
M10x1.5 20
45°
180
PCD Φ85
90±0.01
35
10
20
250
70
230
47.5
300
122
749.5

SR60H

High Performance Boring & Milling Spindle Head

(Round Housing)

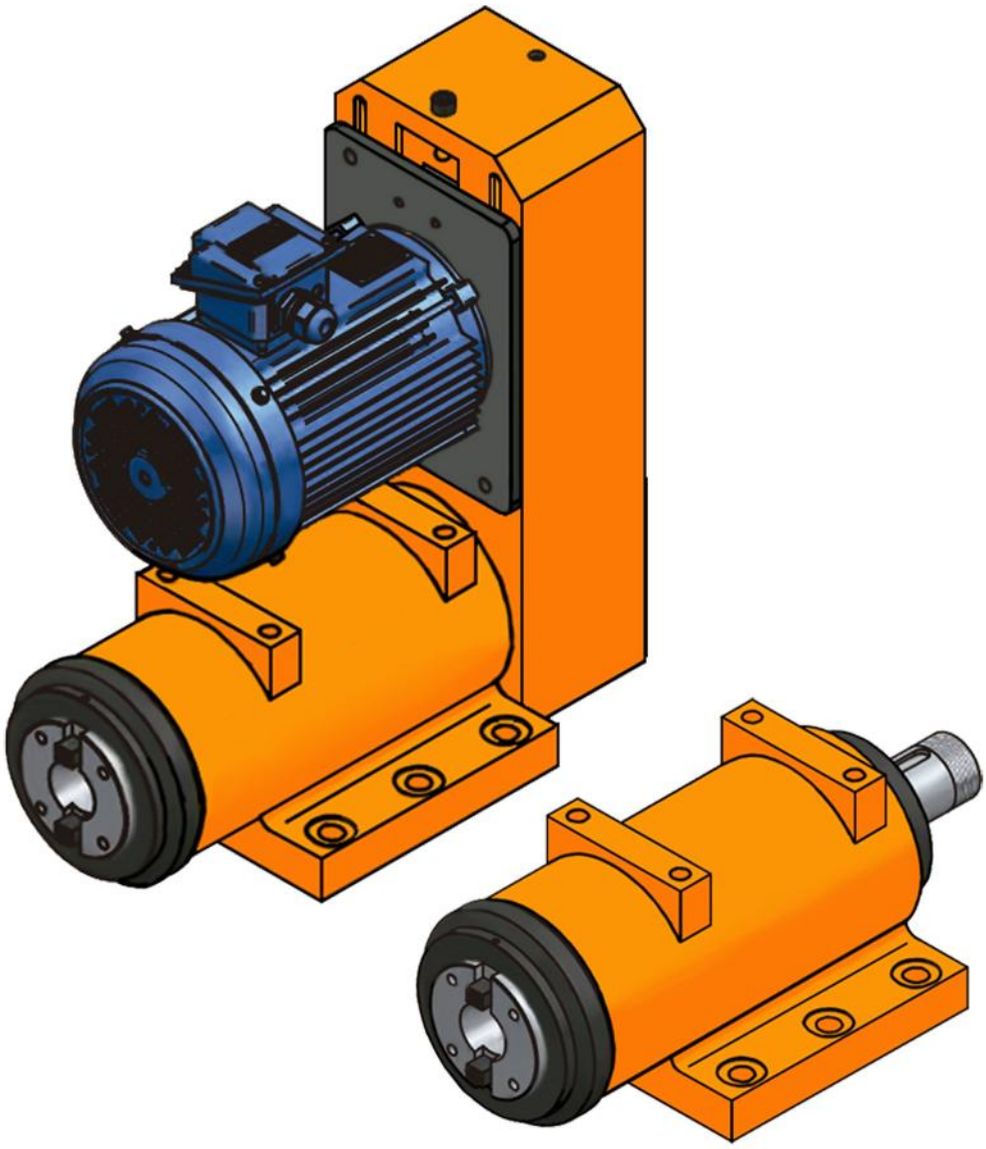

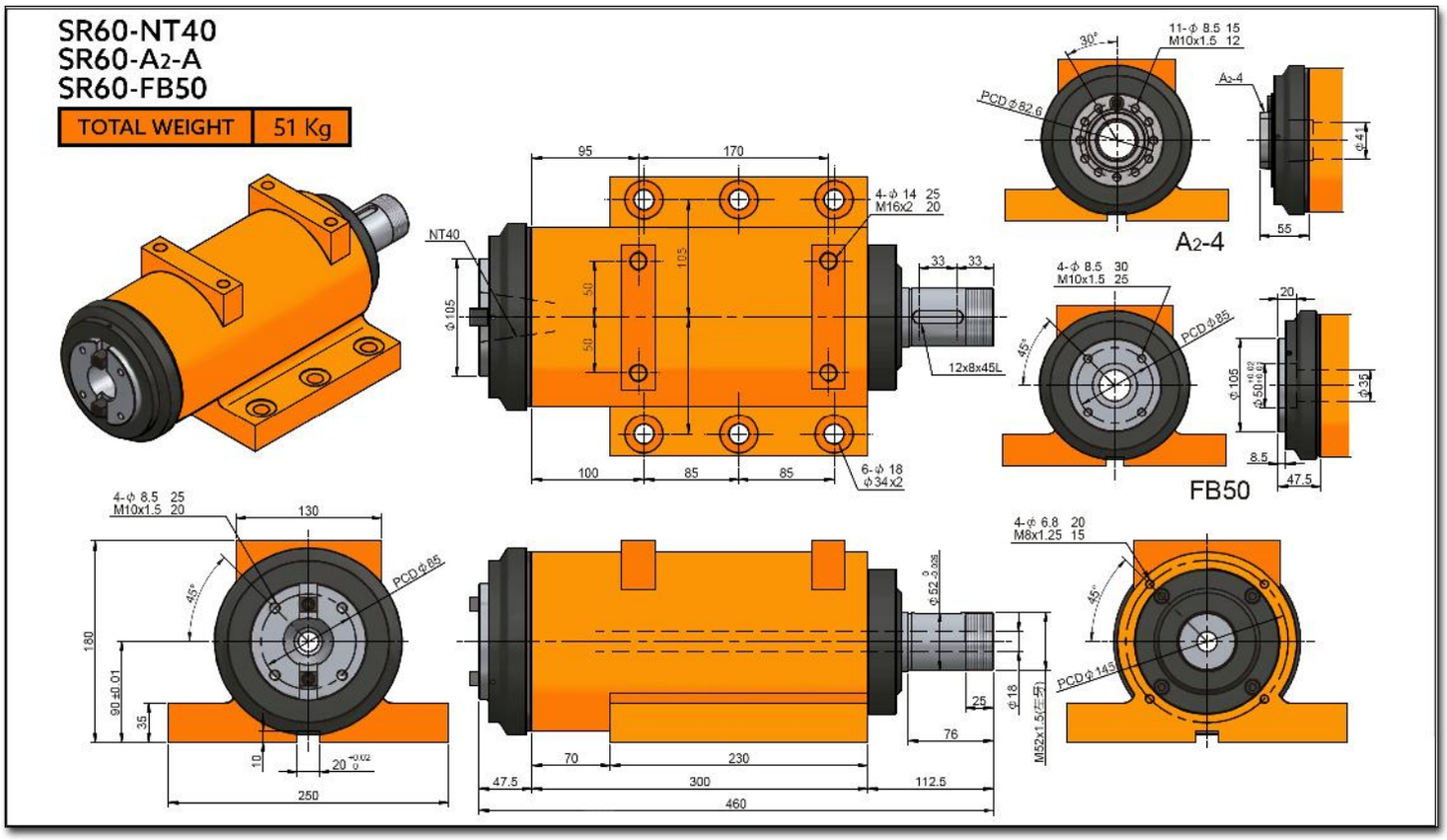
SR60-NT40
SR60-A2-A
SR60-FB50
TOTAL WEIGHT
51 Kg
NT40
4-φ 14 25
M16x2 20
12x8x45L
6-φ 18
φ34x2
11-φ 8.5 15
M10x1.5 12
PCD φ82.6
A2-4
4-φ 8.5 30
M10x1.5 25
PCD φ85
FB50
4-φ 8.5 25
M10x1.5 20
PCD φ85
4-φ 6.8 20
M8x1.25 15
PCD φ145
M52x1.5(左牙)
250
460

Characteristics & Dimensions

Model	SR60H
Spindle Model	*NT40 - A2-4 - FB50*
Maximum Speed (r.p.m.)	*5,000*
Bearings Model	*7211 x 2* *7212 x 2*
Maximum Power	*Within 5 H.p.*
Raising Temperature	*Within 20°C*

**** Roundness: Within 0.003 millimeters.*
*.**** All dimensions are given in millimeters.*

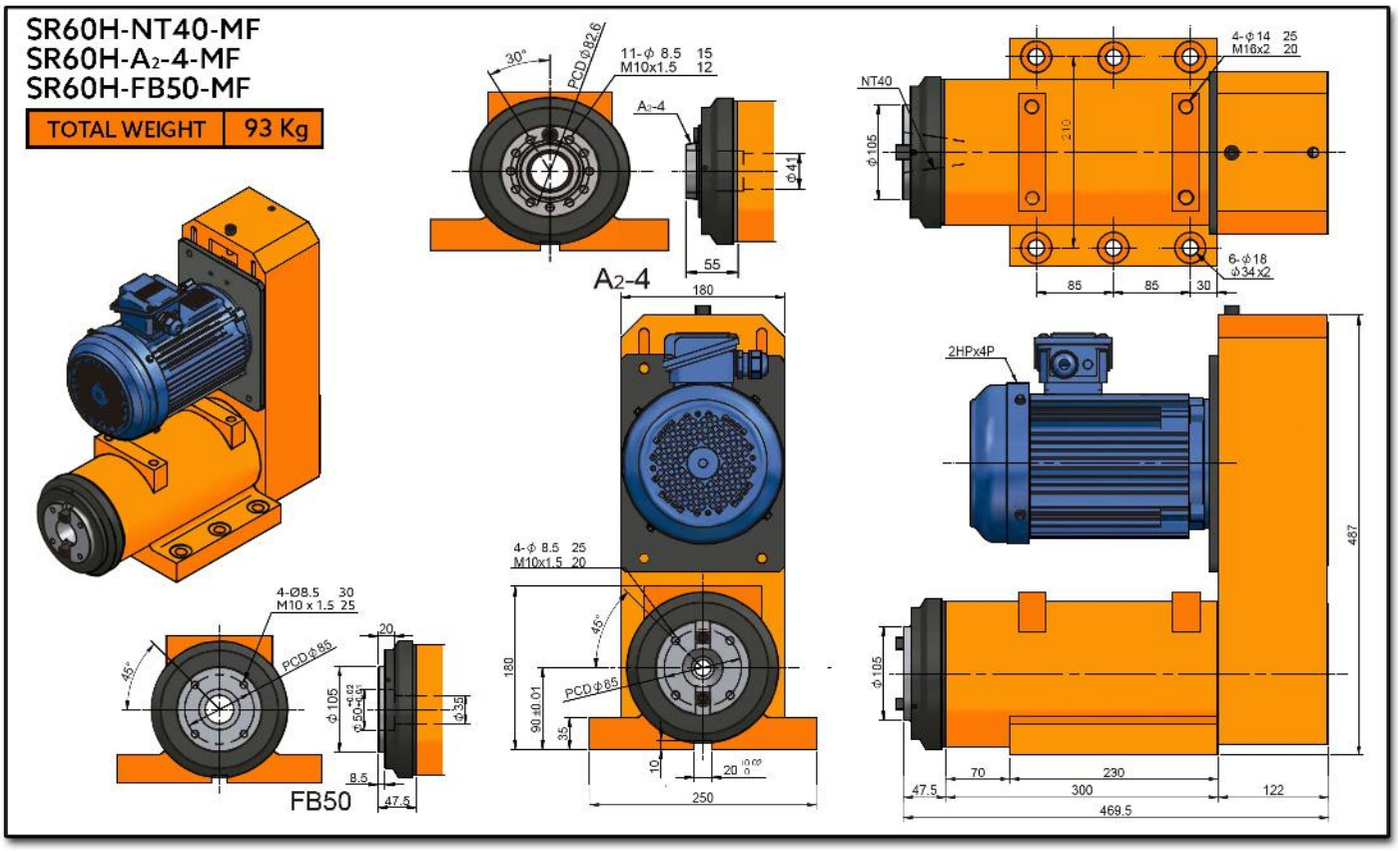
SR60H-NT40-MF
SR60H-A2-4-MF
SR60H-FB50-MF
TOTAL WEIGHT
93 Kg
A2-4
FB50
NT40
2HPx4P

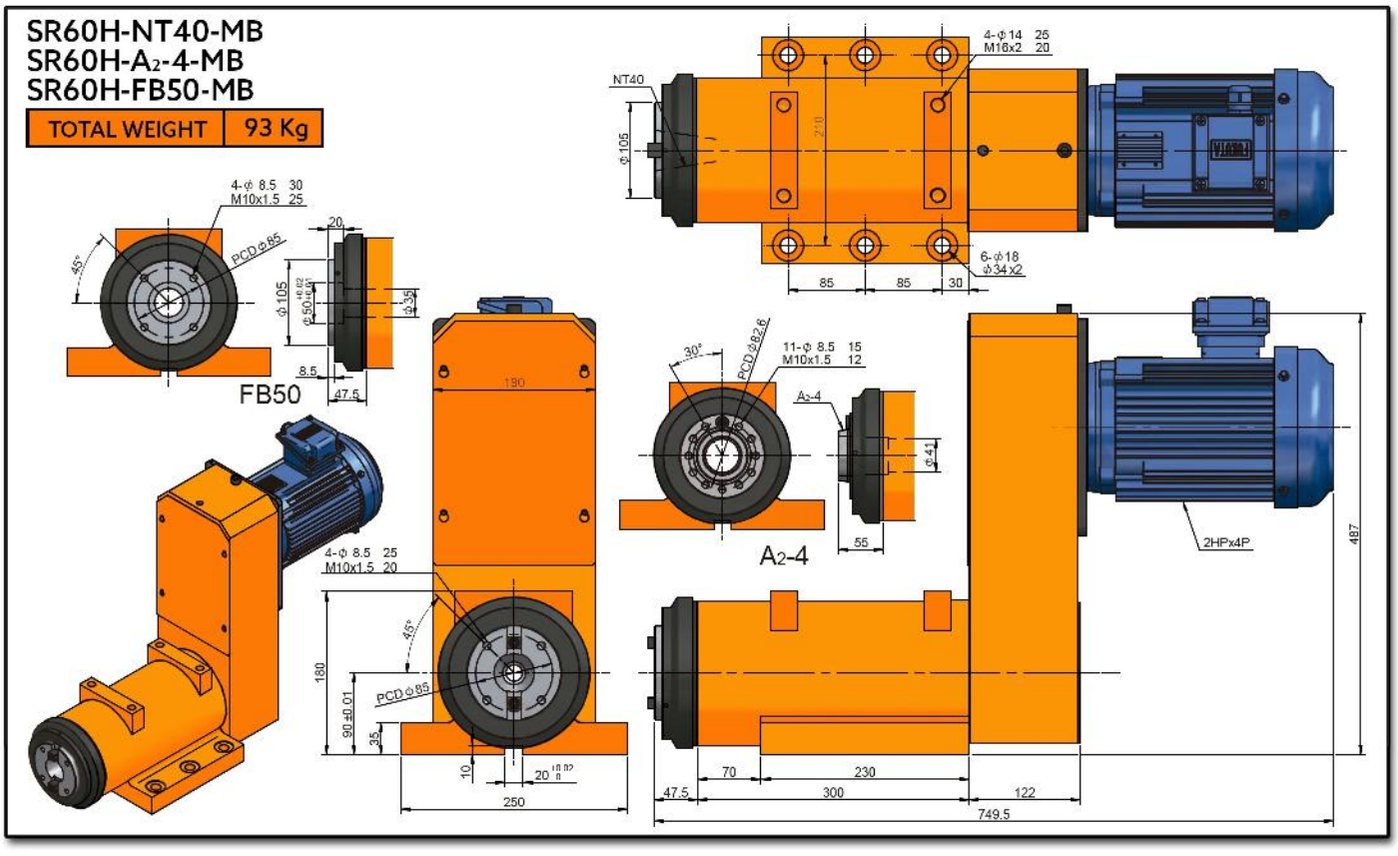
SR60H-NT40-MB
SR60H-A2-4-MB
SR60H-FB50-MB
TOTAL WEIGHT
93 Kg
NT40
4-Φ14 25
M16x2 20
Φ105
2*10
85
85
30
6-Φ18
Φ34x2
4-Φ 8.5 30
M10x1.5 25
PCD Φ85
45°
20
Φ105
Φ50
Φ35
8.5
47.5
FB50
190
30°
PCD Φ62.6
11-Φ 8.5 15
M10x1.5 12
A2-4
Φ41
55
2HPx4P
487
4-Φ 8.5 25
M10x1.5 20
45°
PCD Φ85
180
90±0.01
35
10
20
250
70
230
47.5
300
122
749.5

SR80

Boring & Milling Spindle Head

(Round Housing)

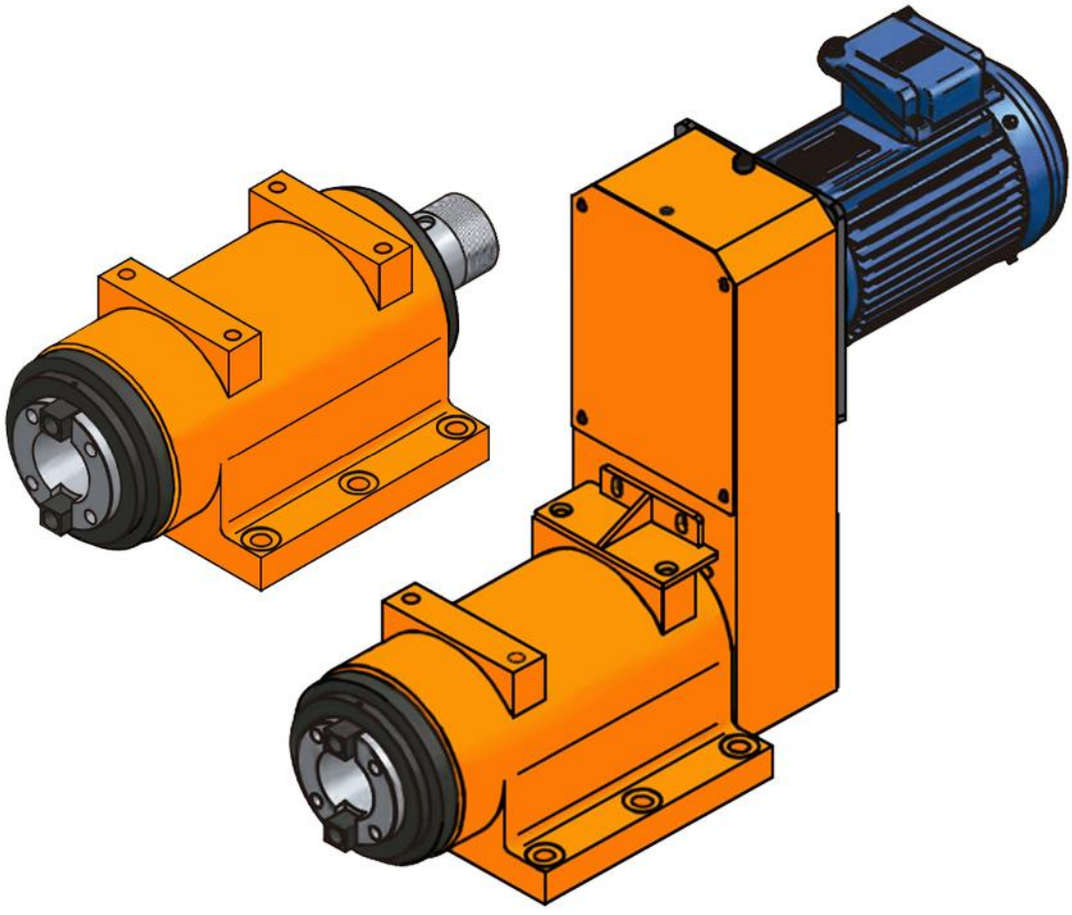

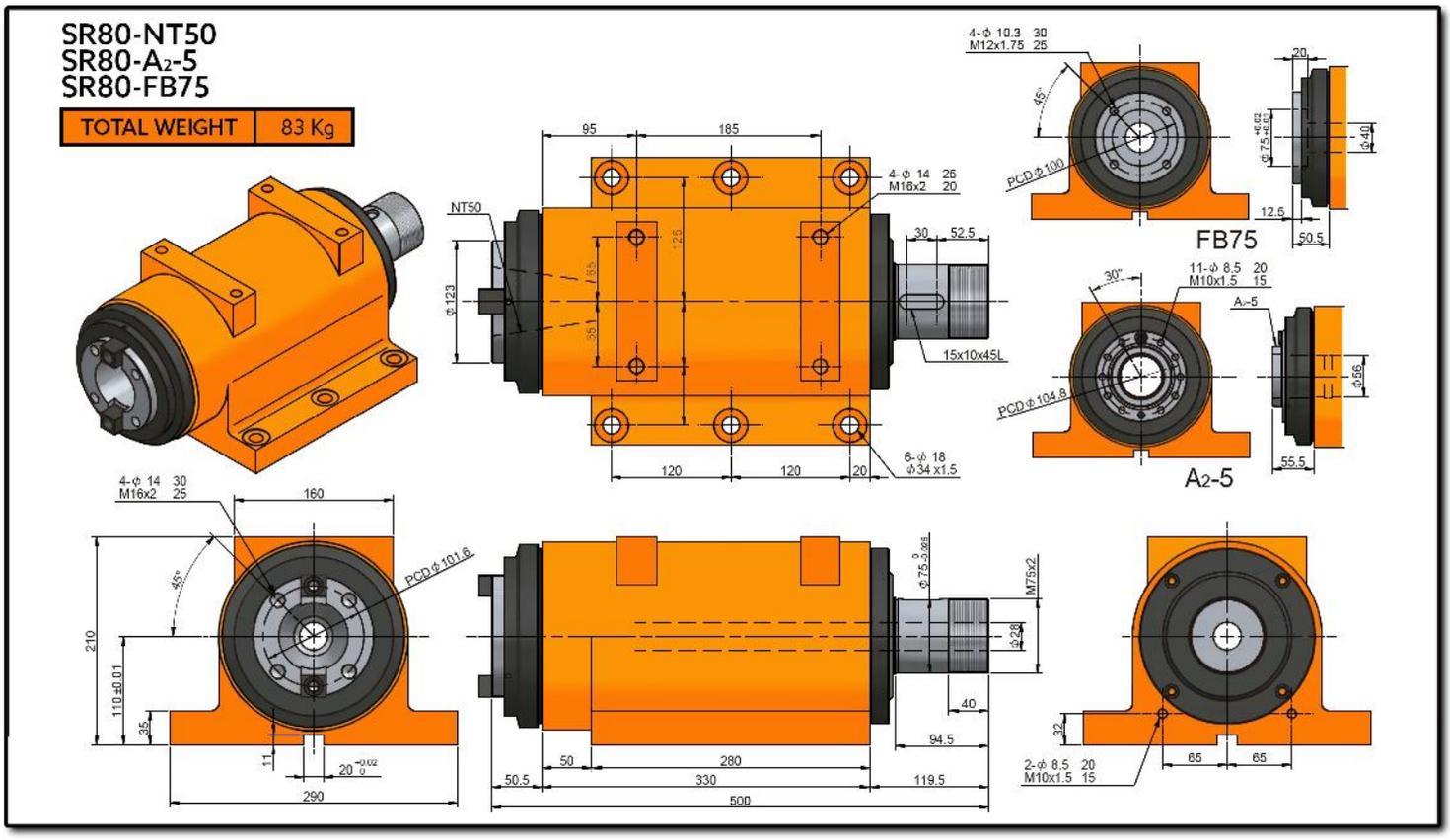
SR80-NT50
SR80-A2-5
SR80-FB75
TOTAL WEIGHT
83 Kg
NT50
4-φ 14 25
M16x2 20
15x10x45L
6-φ 18
φ34 x1.5
4-φ 10.3 30
M12x1.75 25
PCD φ100
FB75
11-φ 8.5 20
M10x1.5 15
PCD φ104.8
A2-5
4-φ 14 30
M16x2 25
PCD φ101.6
M75x2
2-φ 8.5 20
M10x1.5 15

Characteristics & Dimensions

Model	SR80
Spindle Model	*NT50 - A2-5 - FB75*
Maximum Speed (r.p.m.)	*1,200*
Bearings Model	*32216 x 2* *6216Z x 2*
Maximum Power	*Within 7.5 H.p.*
Raising Temperature	*Within 20°C*

**** Roundness: Within 0.003 millimeters.*
*.**** All dimensions are given in millimeters.*

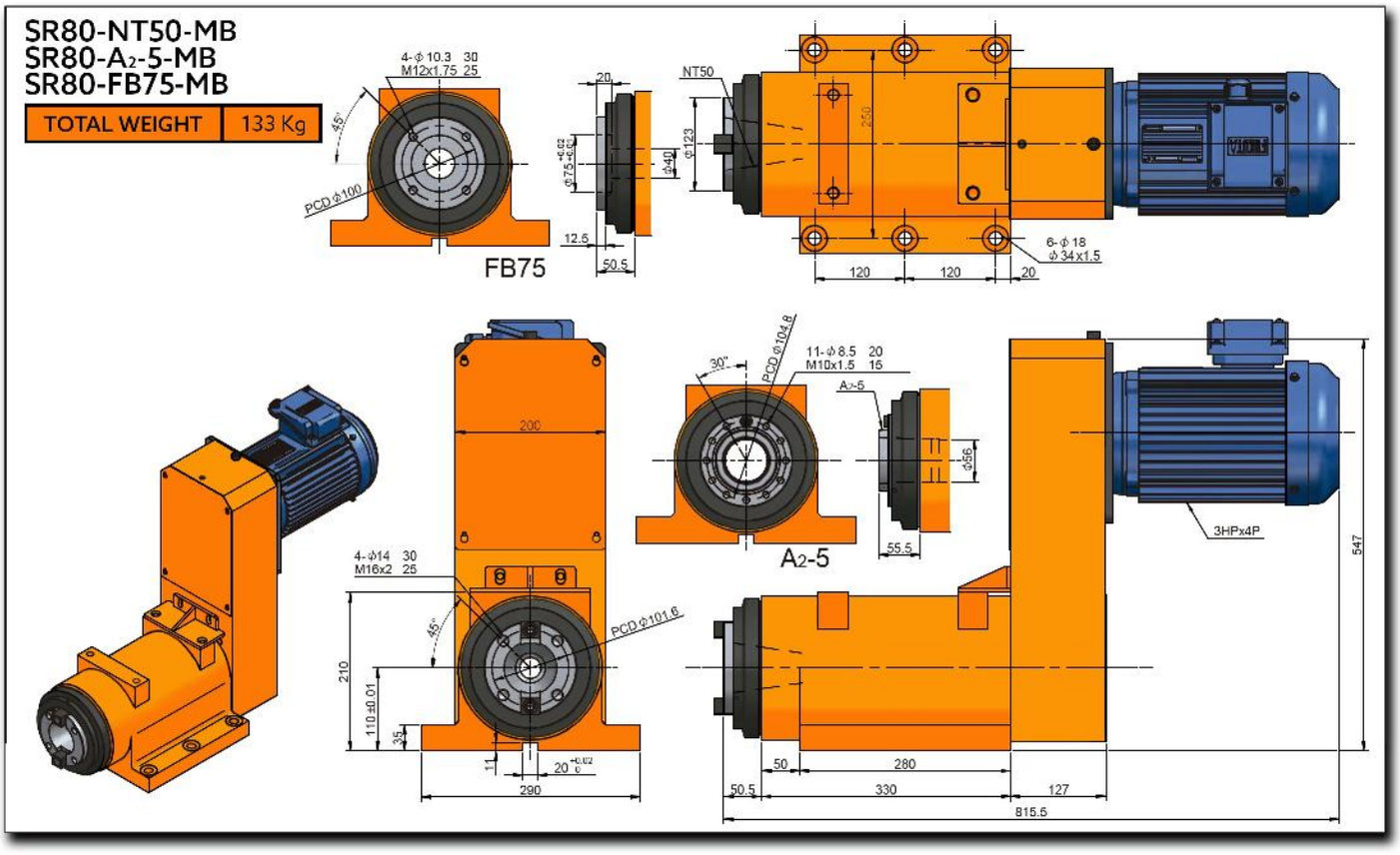
SR80-NT50-MB
SR80-A2-5-MB
SR80-FB75-MB
TOTAL WEIGHT
133 Kg
FB75
NT50
A2-5
3HPx4P
547
815.5

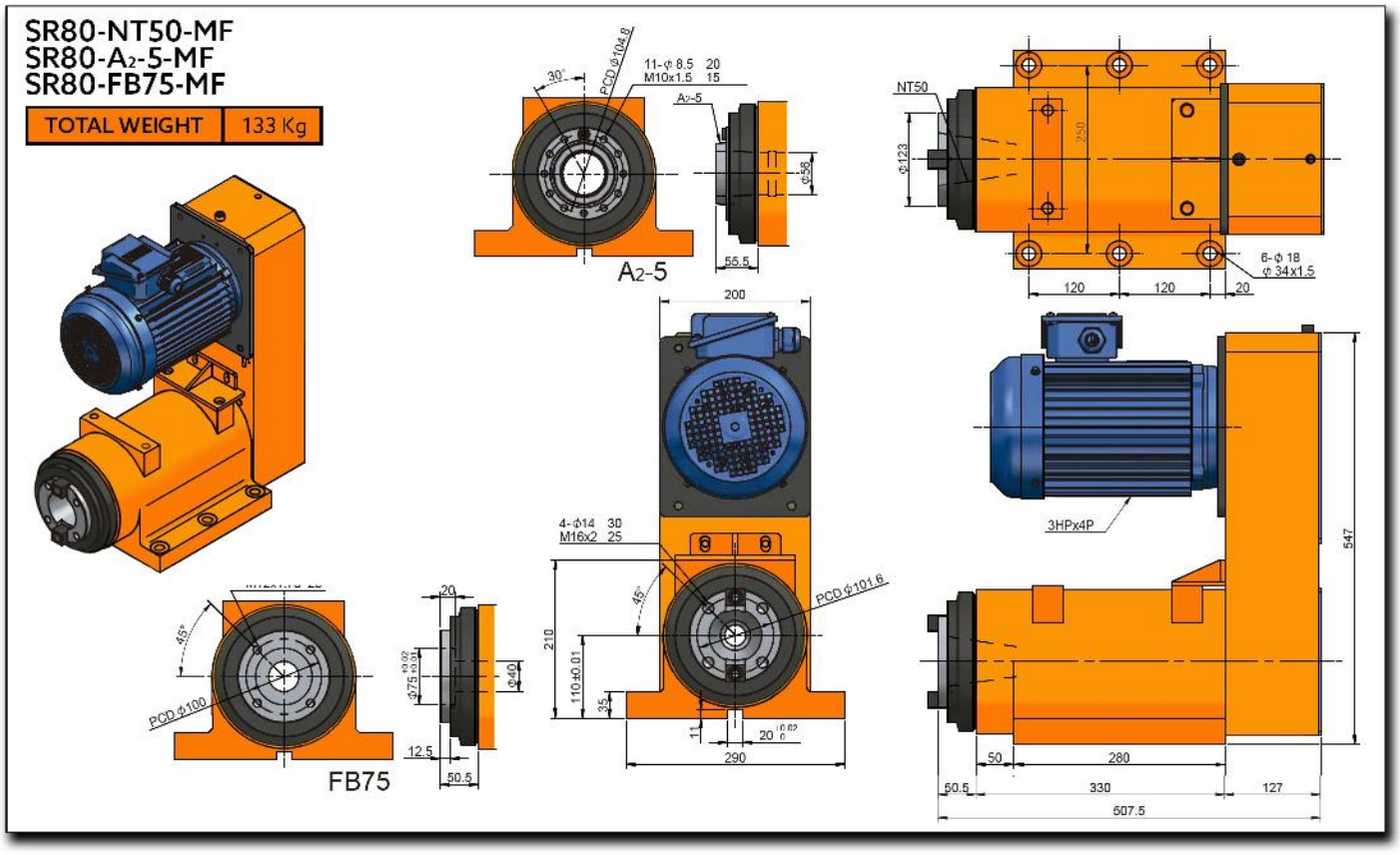
SR80-NT50-MF
SR80-A2-5-MF
SR80-FB75-MF
TOTAL WEIGHT
133 Kg
A2-5
FB75
NT50
3HPx4P
547
290
330
507.5

SR80H

High Performance Boring & Milling Spindle Head

(Round Housing)

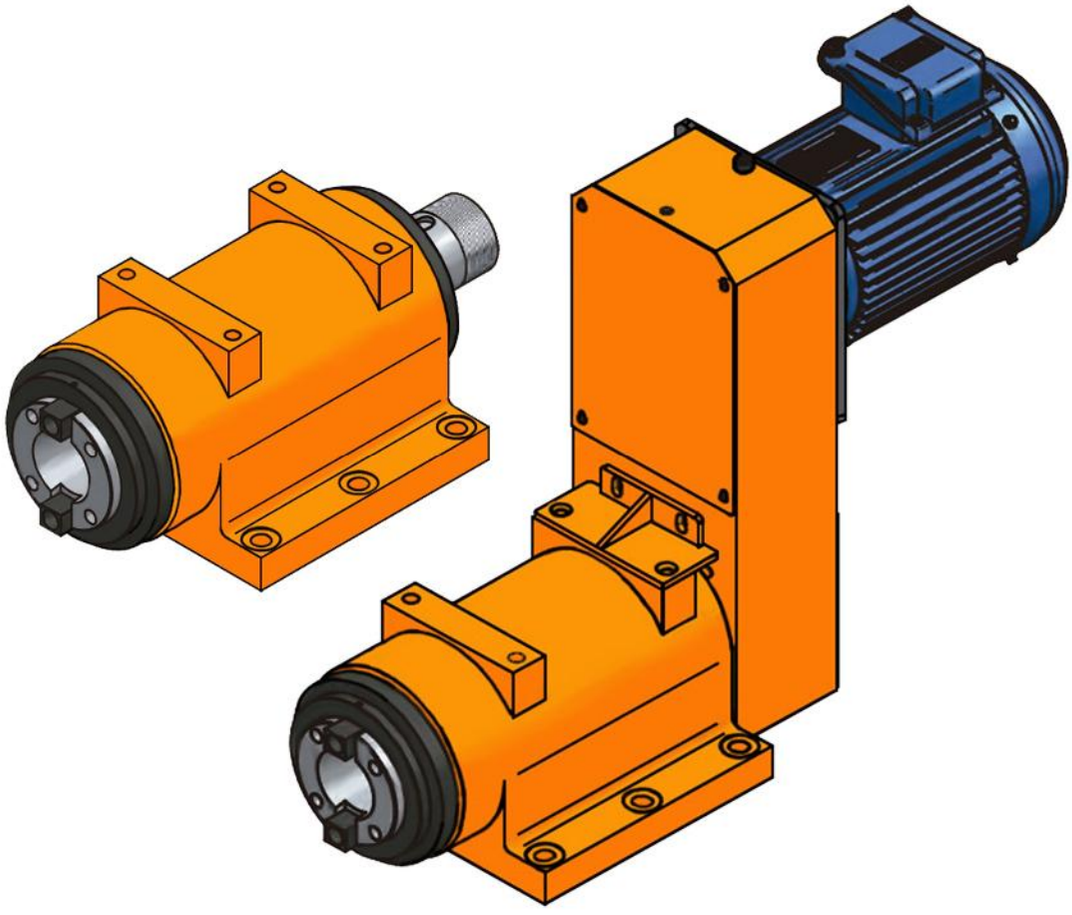

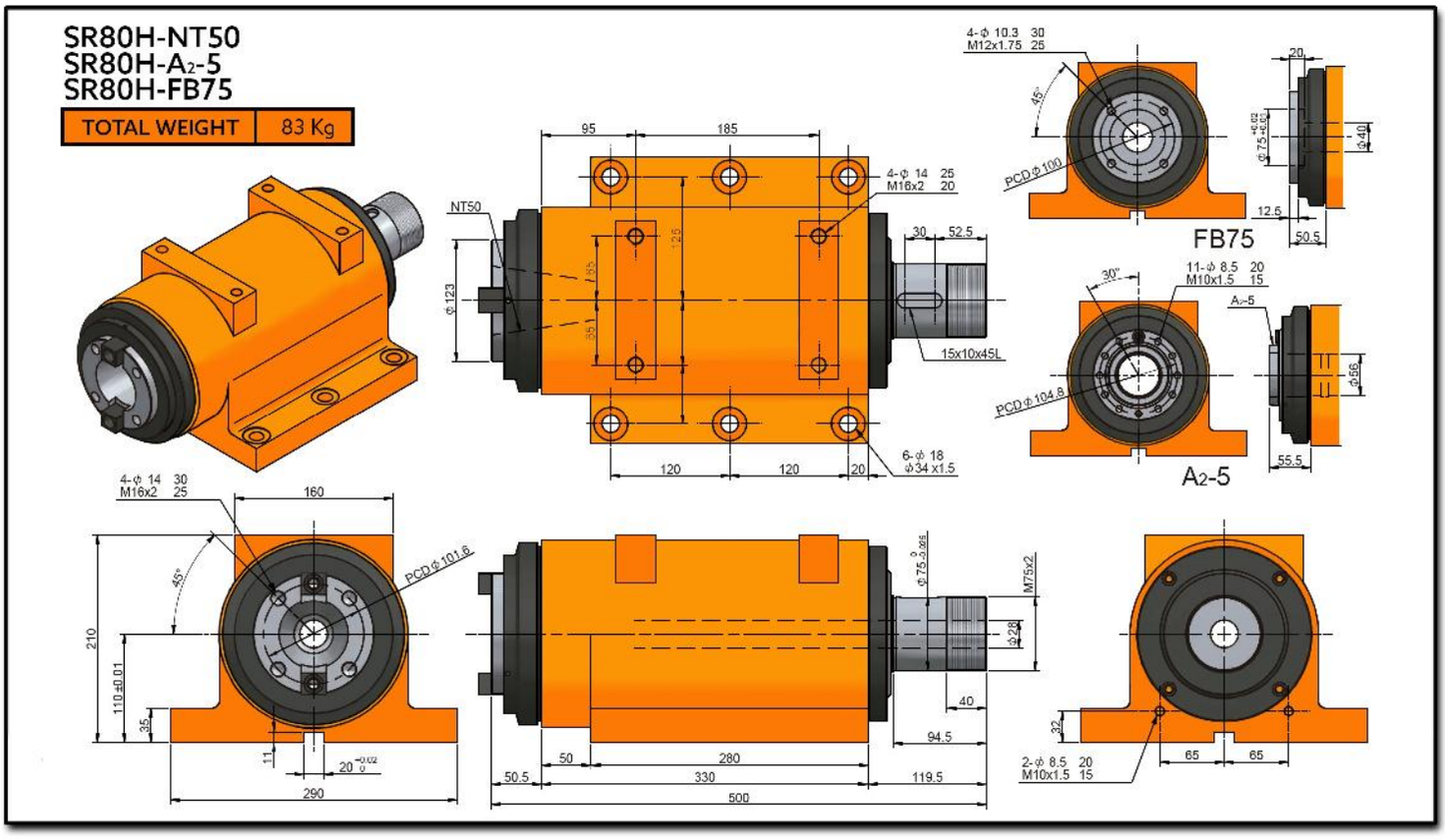
SR80H-NT50
SR80H-A2-5
SR80H-FB75
TOTAL WEIGHT
83 Kg
NT50
95
185
4-φ 14 25
M16x2 20
30
52.5
15x10x45L
6-φ 18
φ34 x1.5
120
120
20
φ123
4-φ 10.3 30
M12x1.75 25
45°
PCD φ100
FB75
20
φ40
12.6
50.5
11-φ 8.5 20
M10x1.5 15
30°
PCD φ104.8
A2-5
φ66
55.5
4-φ 14 30
M16x2 25
160
45°
PCD φ101.6
210
110±0.01
35
11
290
φ75.3
M75x2
φ28
40
94.5
50
280
330
50.5
119.5
500
2-φ 8.5 20
M10x1.5 15
65
65

Characteristics & Dimensions

MODEL	SR80H
Spindle Model	*NT50 - A2-5 - FB75*
Maximum Speed *(r.p.m.)*	*3,000*
Bearings Model	*7216 x 4*
Maximum Power	*Within 7.5 H.p.*
Raising Temperature	*Within 20°C*

*** Roundness: Within 0.003 millimeters.
.**** All dimensions are given in millimeters.

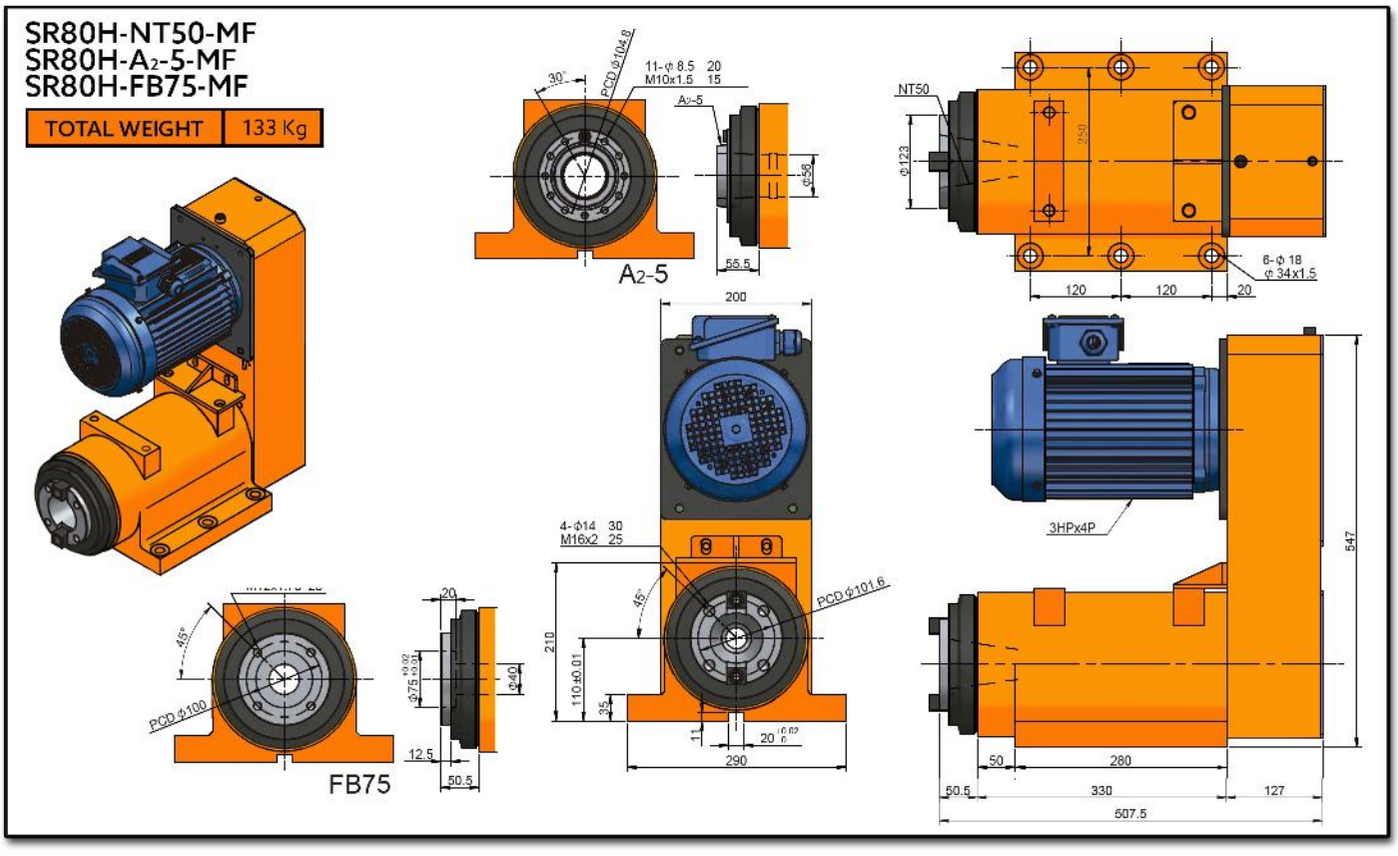
SR80H-NT50-MF
SR80H-A2-5-MF
SR80H-FB75-MF
TOTAL WEIGHT
133 Kg
A2-5
FB75
NT50
3HPx4P
PCD ϕ104.8
PCD ϕ101.6
PCD ϕ100
11-ϕ 8.5 20
M10x1.5 15
4-ϕ14 30
M16x2 25
6-ϕ 18
ϕ 34x1.5
200
290
547
280
330
507.5
120
120
20
50
50.5
127
55.5
12.5
50.5
210
110±0.01
35
11
45°
30°

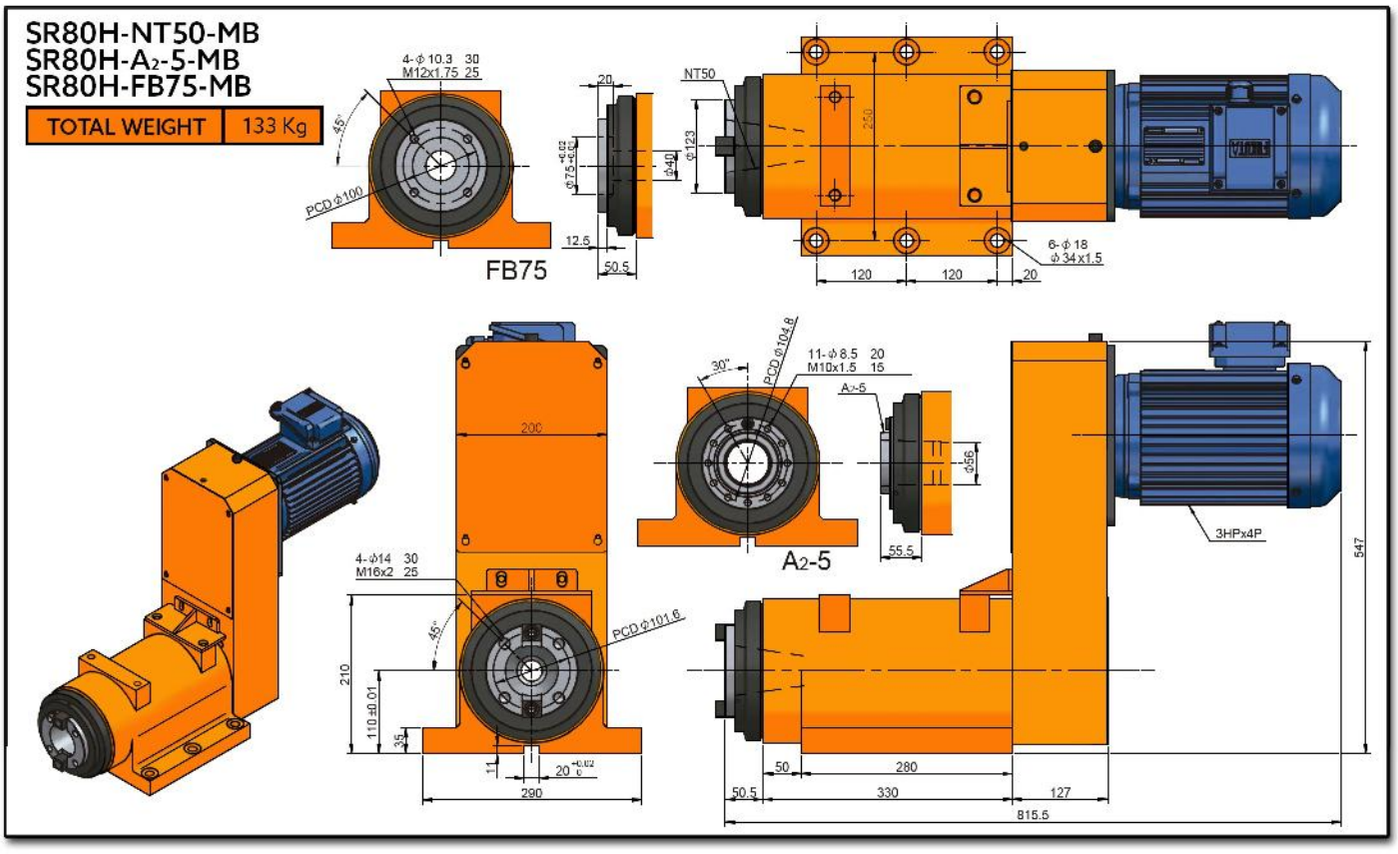
SR80H-NT50-MB
SR80H-A2-5-MB
SR80H-FB75-MB
TOTAL WEIGHT
133 Kg
FB75
A2-5
NT50
3HPx4P
PCD ϕ100
PCD ϕ104.8
PCD ϕ101.6
4-ϕ10.3 30
M12x1.75 25
4-ϕ14 30
M16x2 25
11-ϕ8.5 20
M10x1.5 15
6-ϕ18
ϕ34x1.5
45°
30°
250
200
290
210
110±0.01
35
11
20
12.5
50.5
ϕ40
ϕ123
ϕ56
55.5
120
120
20
50
280
50.5
330
127
815.5
547

SRR SERIES

HIGH SPEED BORING/MILLING SPINDLES

SRR-35

High Performance Boring & Milling Spindle

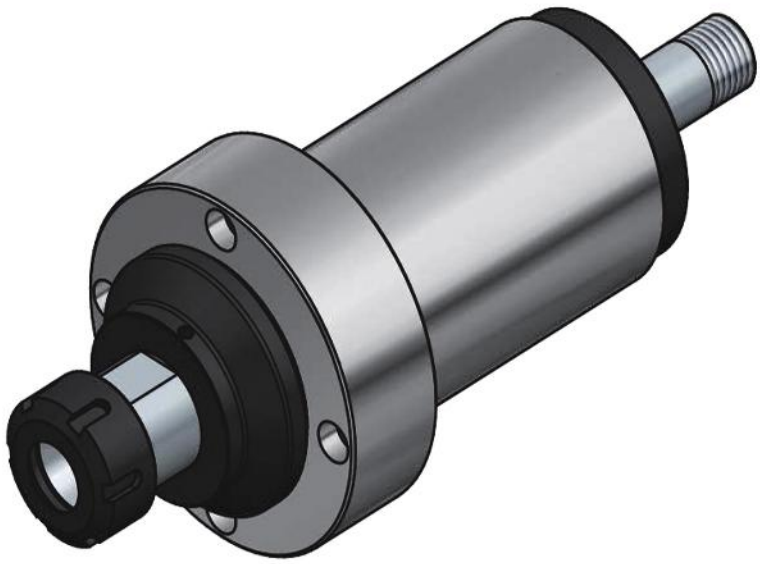

Characteristics & Dimensions

Model	SRR35
Spindle Model	*MT3 | ER32*
Maximum Speed (r.p.m.)	*3,000*
Bearings Model	*32007 | 6007Z* *32006 | 6006Z*
Maximum Power	*Within 1 H.p.*
Raising Temperature	*Within 20°C*

**** Roundness: Within 0.003 millimeters.*
*.**** All dimensions are given in millimeters.*

SRR35-ER32

TOTAL WEIGHT	10 Kg

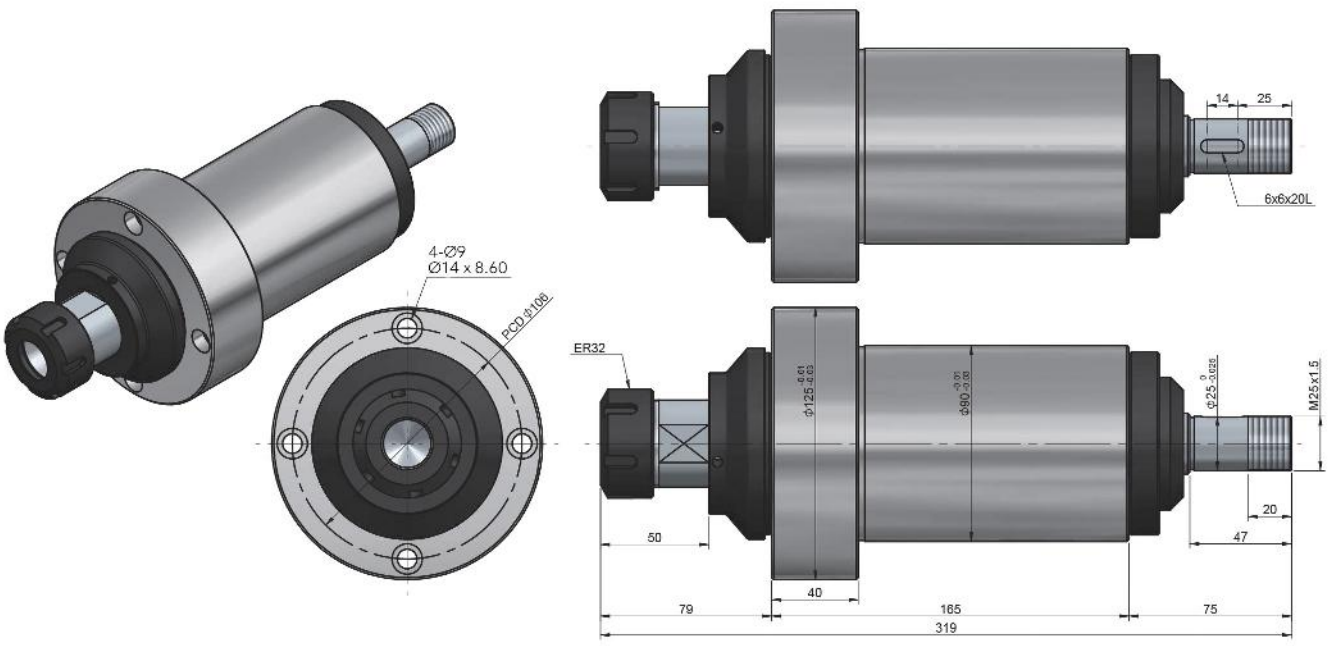

SRR35-MT3

TOTAL WEIGHT	10 Kg

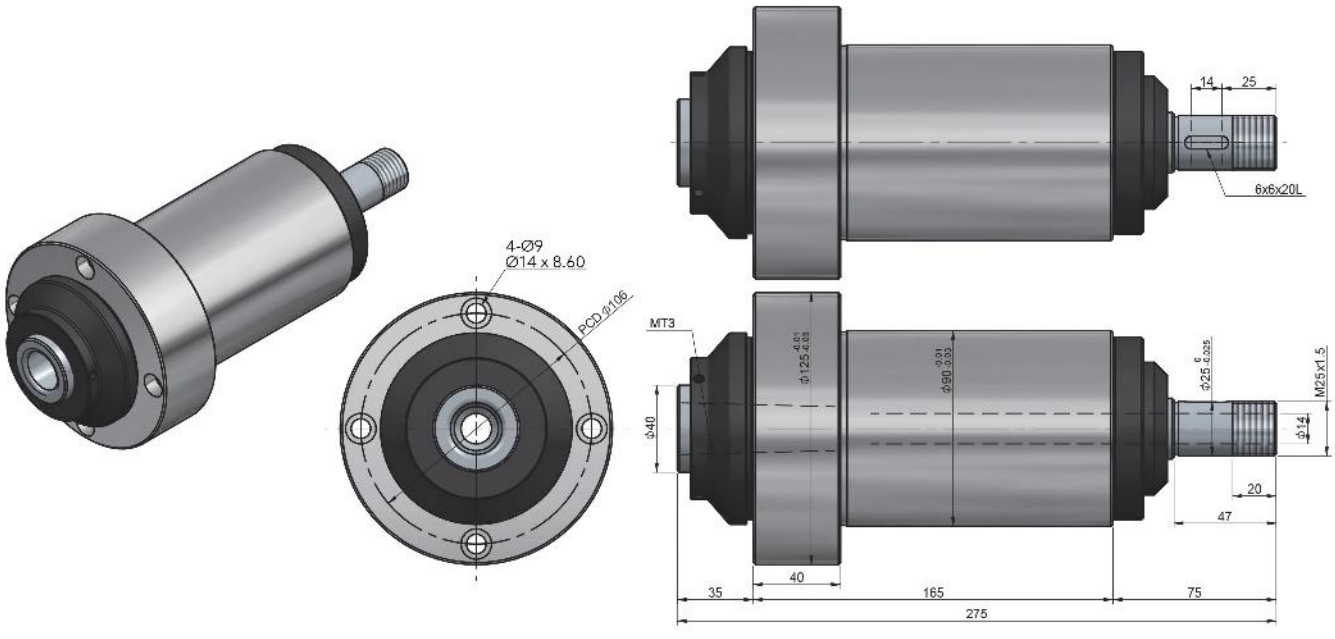

SRR-35H

High Performance Boring & Milling Spindle

(High Speed)

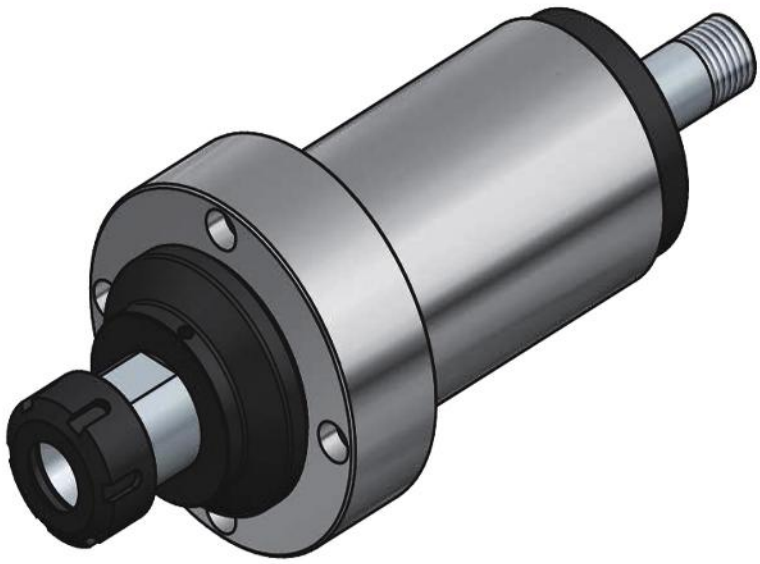

Characteristics & Dimensions

Model	SRR35H
Spindle Model	*MT3 | ER32*
Maximum Speed (r.p.m.)	*10,000*
Bearings Model	*7007 x 2* *7006 x 2*
Maximum Power	*Within 1 H.p.*
Raising Temperature	*Within 20°C*

**** Roundness: Within 0.003 millimeters.*
*.**** All dimensions are given in millimeters.*

SRR35H-ER32

TOTAL WEIGHT	10 Kg

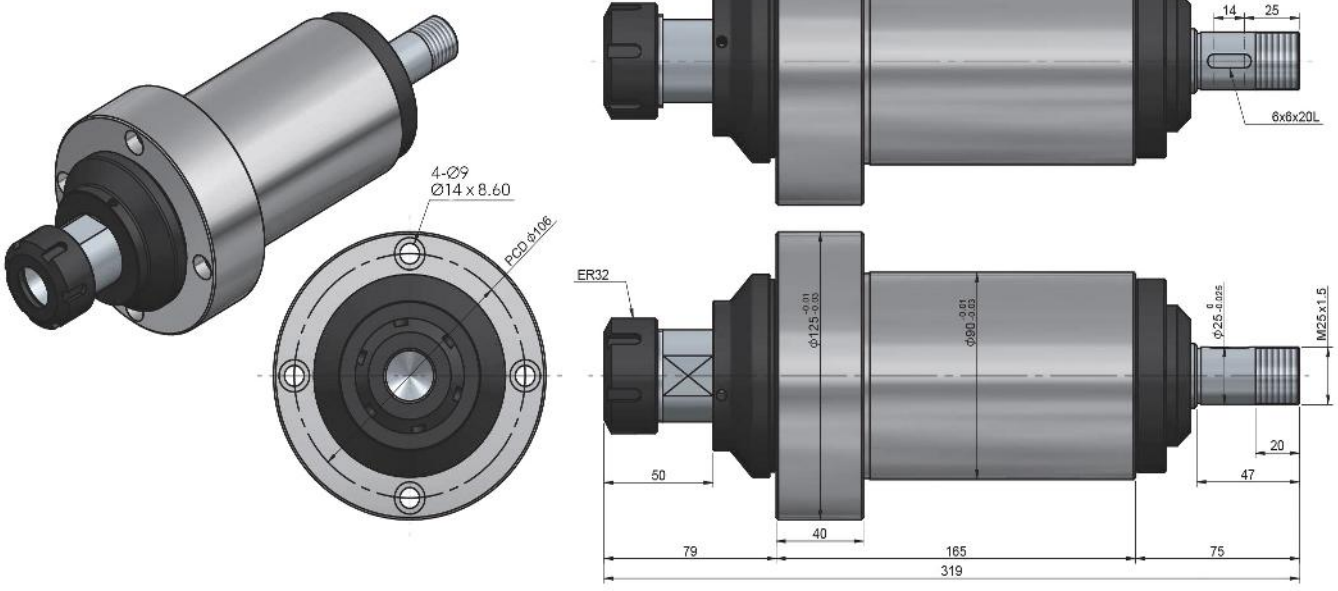

SRRH35-MT3

TOTAL WEIGHT	10 Kg

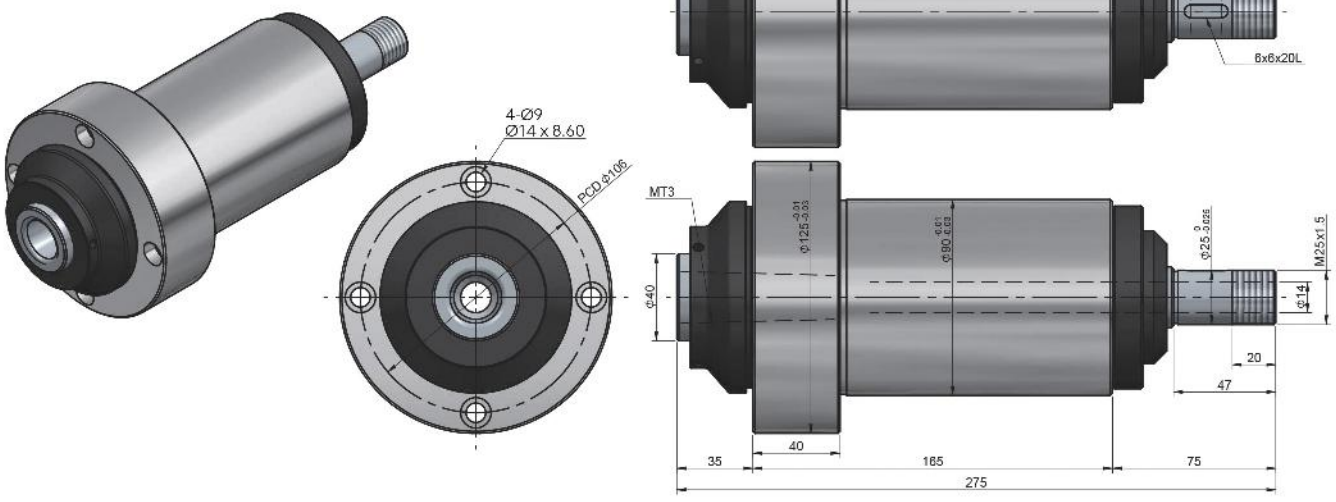

SRR-45

High Performance Boring & Milling Spindle

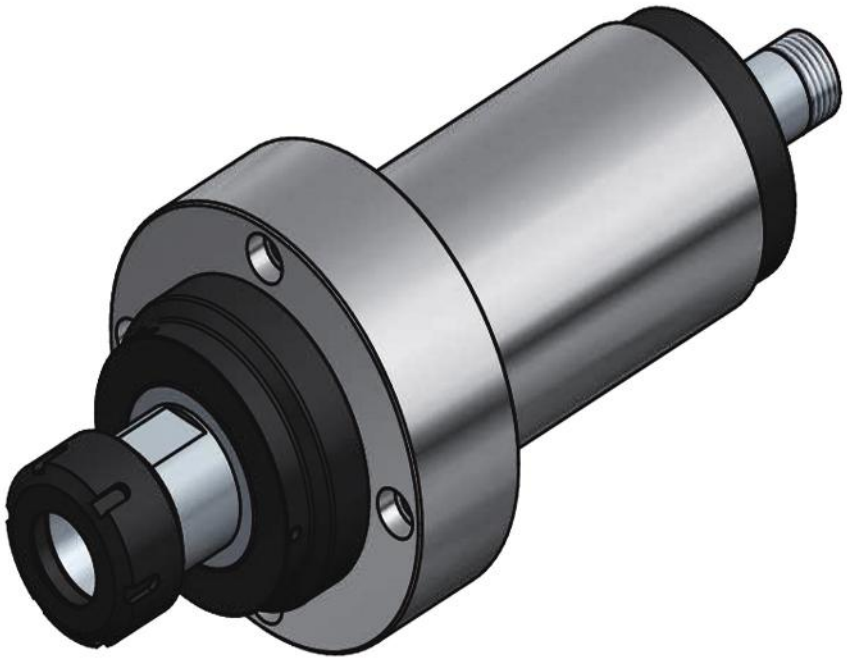

Characteristics & Dimensions

Model	SRR45
Spindle Model	*NT30 | ER40*
Maximum Speed (r.p.m.)	*2,500*
Bearings Model	*32009 | 6009Z* *32008 | 6008Z*
Maximum Power	*Within 2 H.p.*
Raising Temperature	*Within 20°C*

**** Roundness: Within 0.003 millimeters.*
*.**** All dimensions are given in millimeters.*

SRR45-ER40

TOTAL WEIGHT	17 Kg

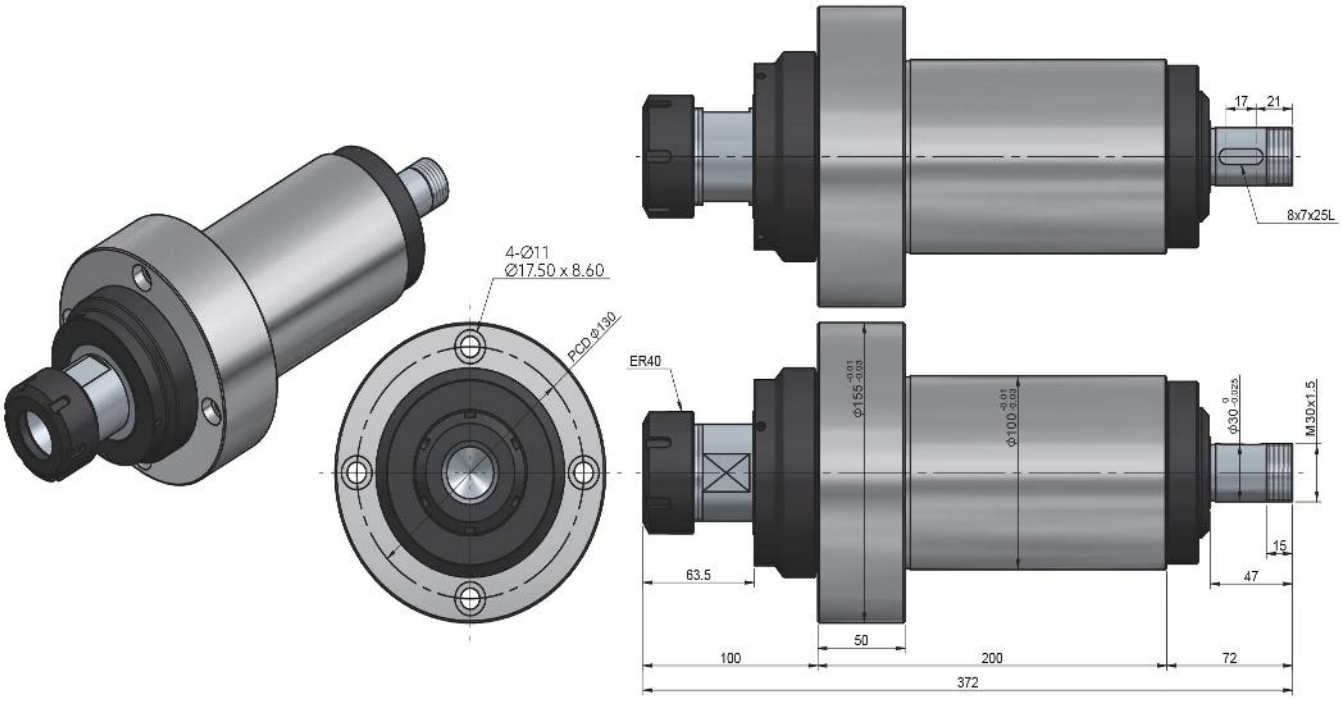

SRR45-NT30

TOTAL WEIGHT	18 Kg

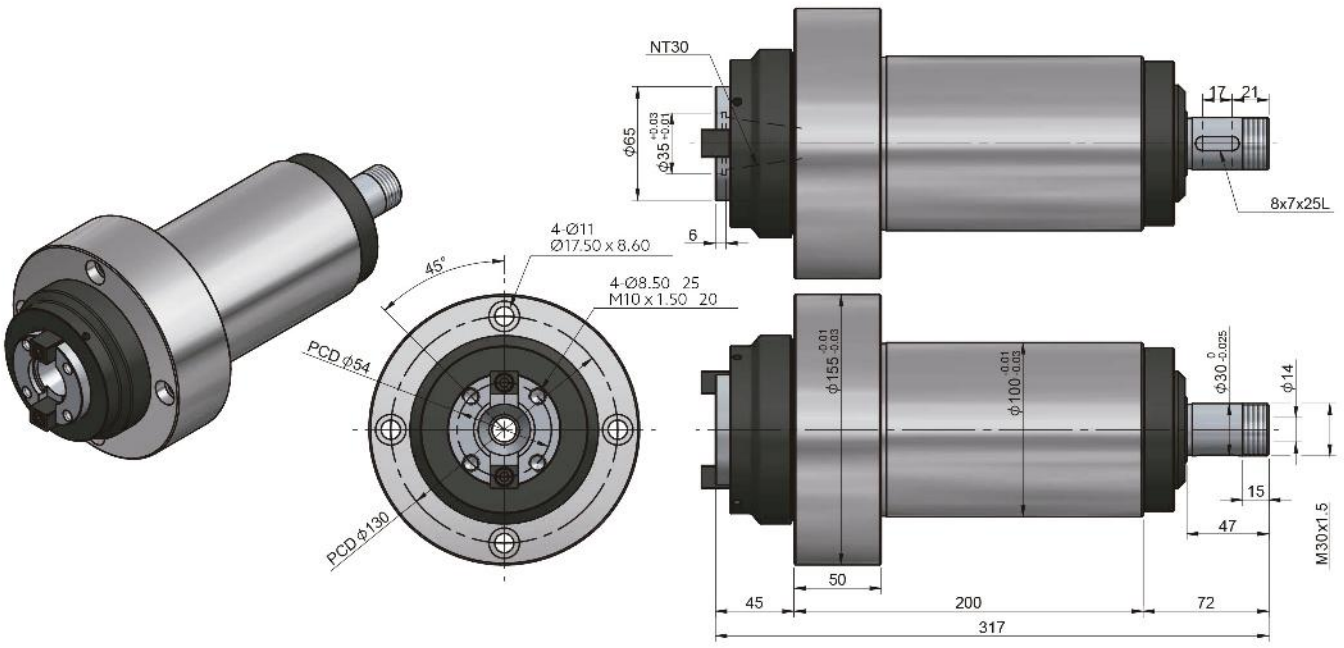

SRR-45H

High Performance Boring & Milling Spindle

(High Speed)

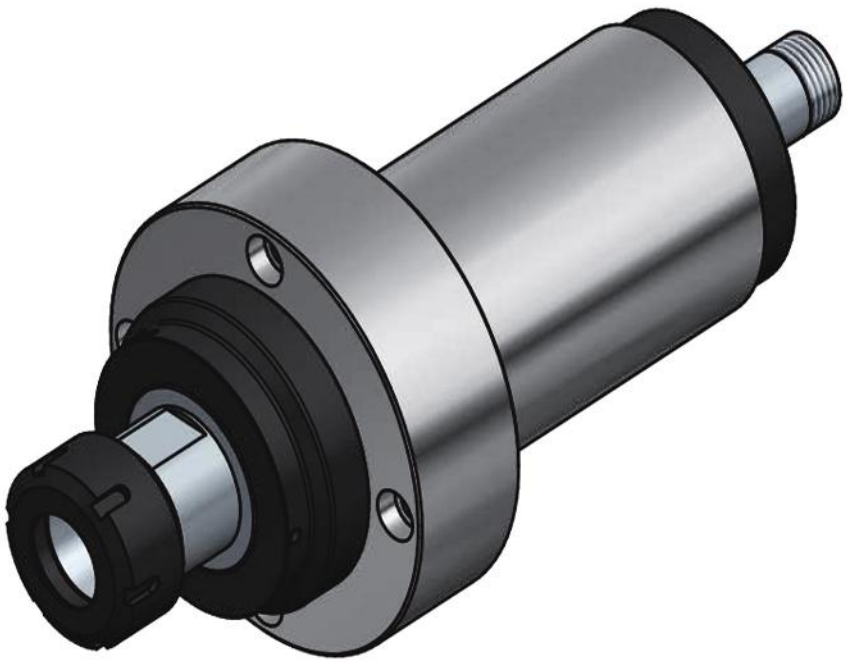

Characteristics & Dimensions

Model	SRR45H
Spindle Model	*NT30 | ER40*
Maximum Speed (r.p.m.)	*8,000*
Bearings Model	*7009 x 2* *7008 x 2*
Maximum Power	*Within 2 H.p.*
Raising Temperature	*Within 20°C*

**** Roundness: Within 0.003 millimeters.*
*.**** All dimensions are given in millimeters.*

SRR45H-ER40

TOTAL WEIGHT	17 Kg

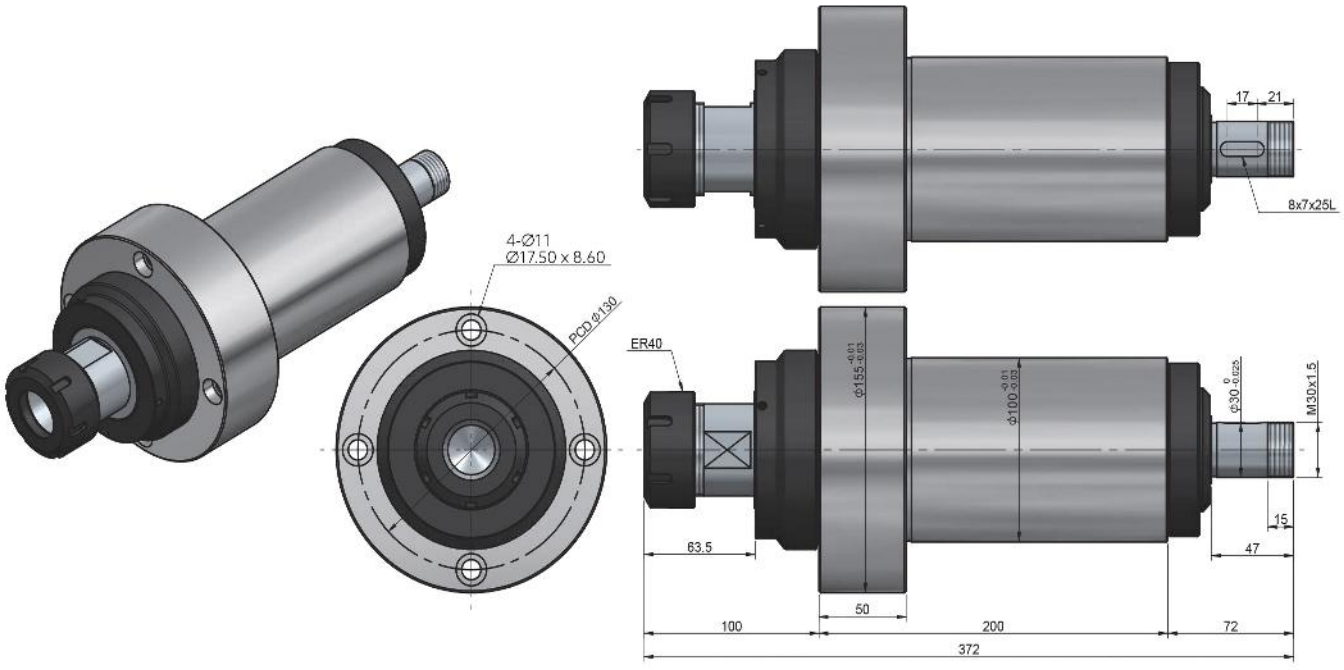

SRR45H-NT30

TOTAL WEIGHT	18 Kg

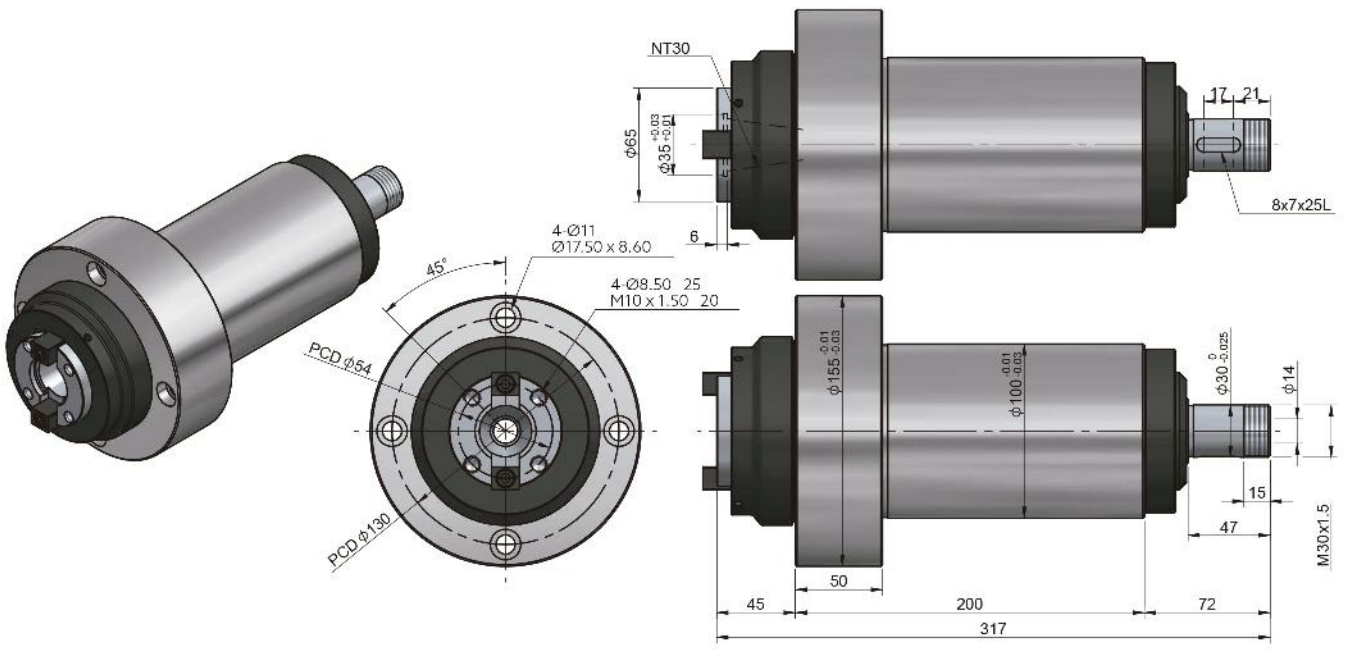

SRR-55

High Performance Boring & Milling Spindle

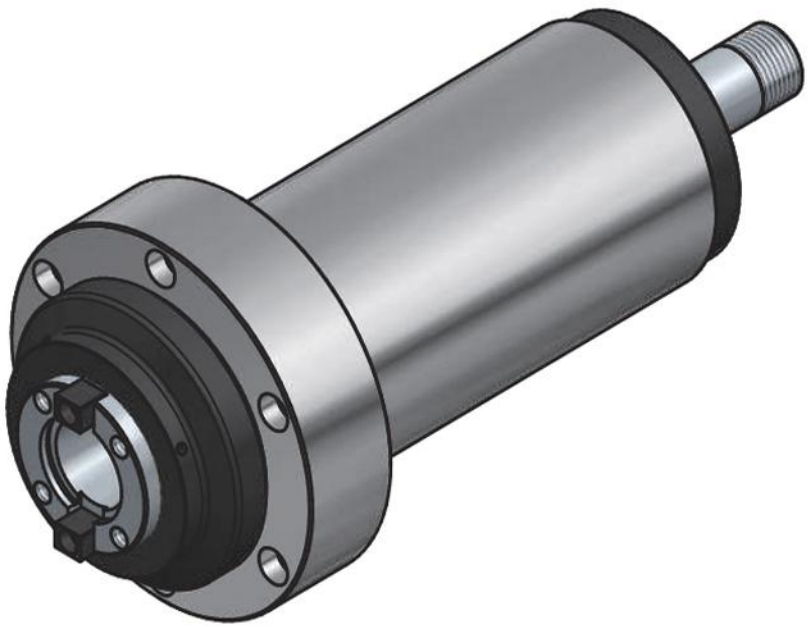

Characteristics & Dimensions

Model	SRR55
Spindle Model	*NT40 | MT4*
Maximum Speed (r.p.m.)	*2,000*
Bearings Model	*32011 | 6011Z* *32010 | 6010Z*
Maximum Power	*Within 3 H.p.*
Raising Temperature	*Within 20°C*

**** Roundness: Within 0.003 millimeters.*
*.**** All dimensions are given in millimeters.*

SRR55-NT40

TOTAL WEIGHT	31 Kg

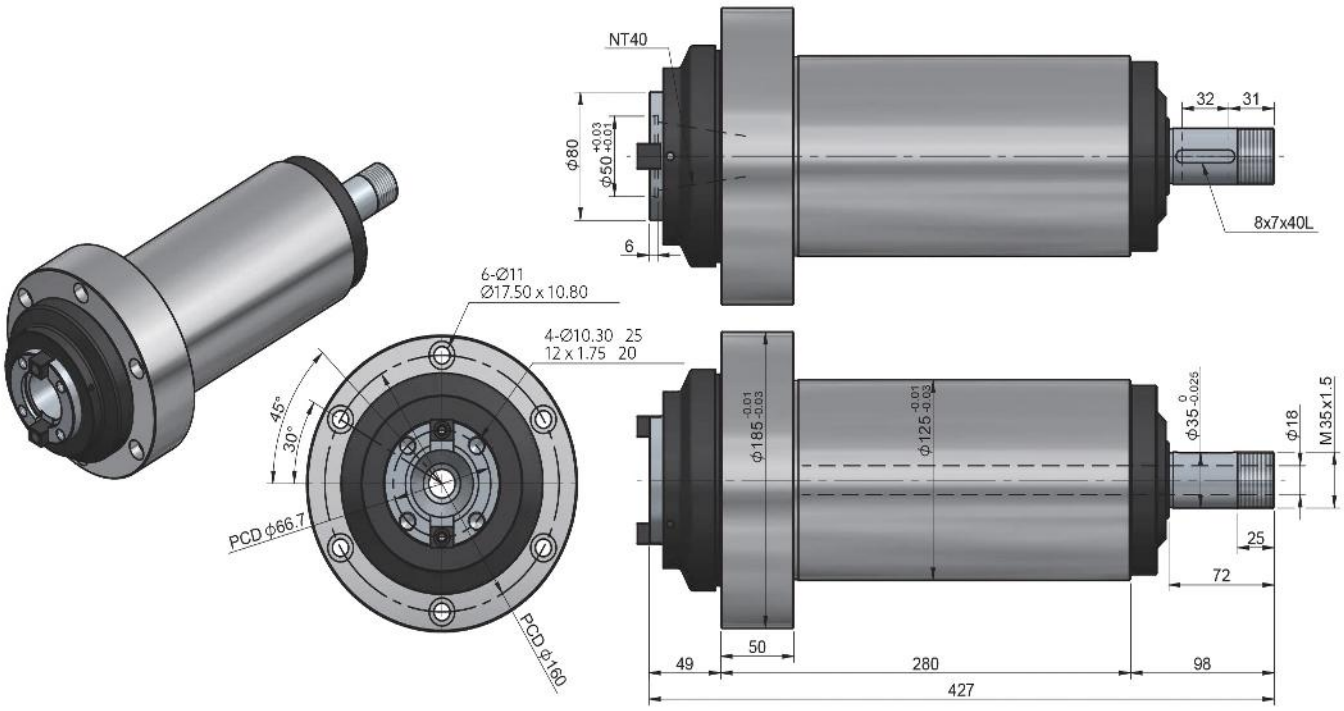

SRR55-MT4

TOTAL WEIGHT	31 Kg

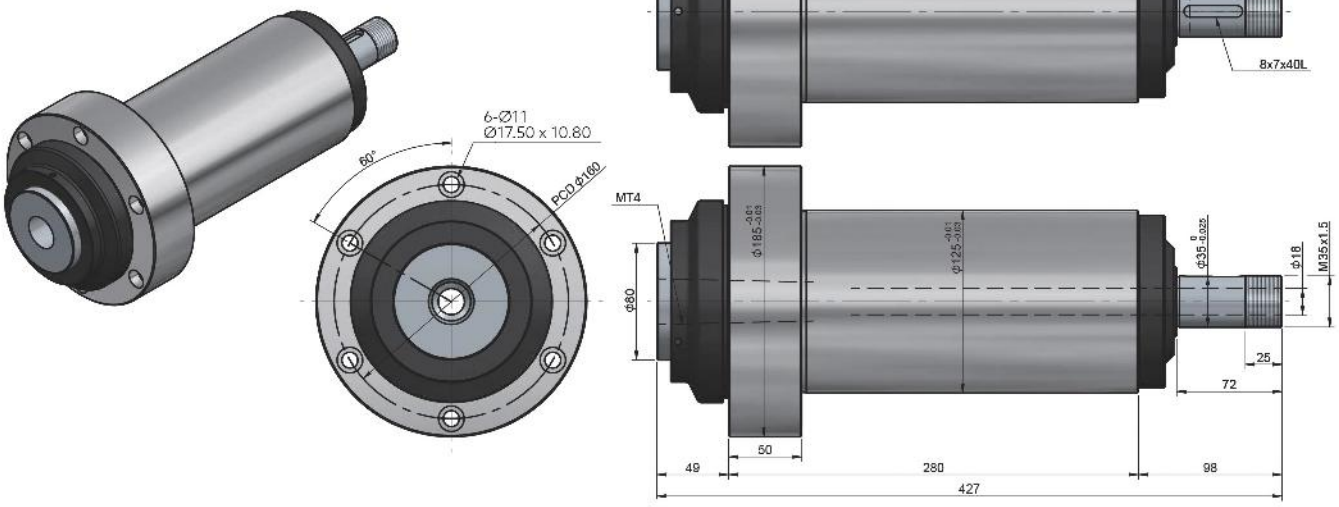

SRR-55H

High Performance Boring & Milling Spindle

(High Speed)

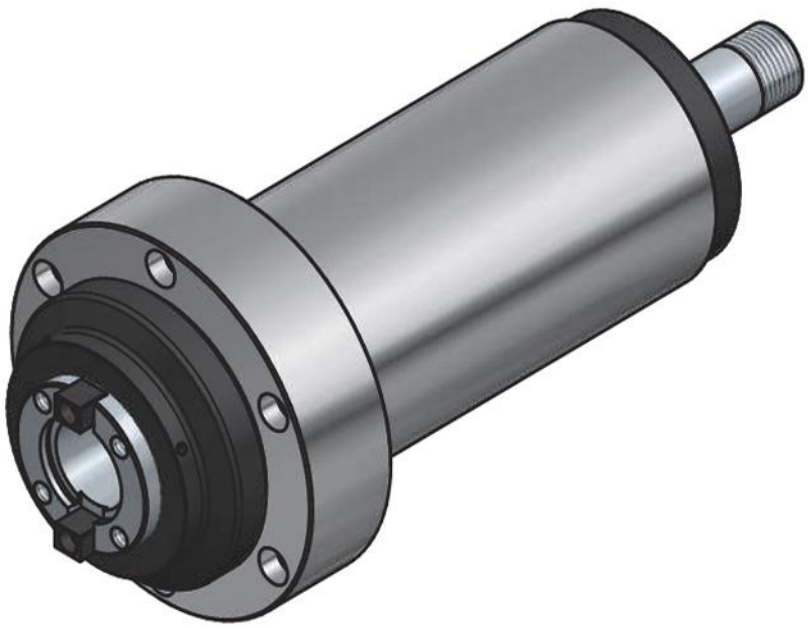

Characteristics & Dimensions

Model	SRR55H
Spindle Model	*NT40 | MT4*
Maximum Speed (r.p.m.)	*6,000*
Bearings Model	*7011 x 2* *7010 x 2*
Maximum Power	*Within 3 H.p.*
Raising Temperature	*Within 20°C*

**** Roundness: Within 0.003 millimeters.*
*.**** All dimensions are given in millimeters.*

SRR55H-NT40

TOTAL WEIGHT	31 Kg

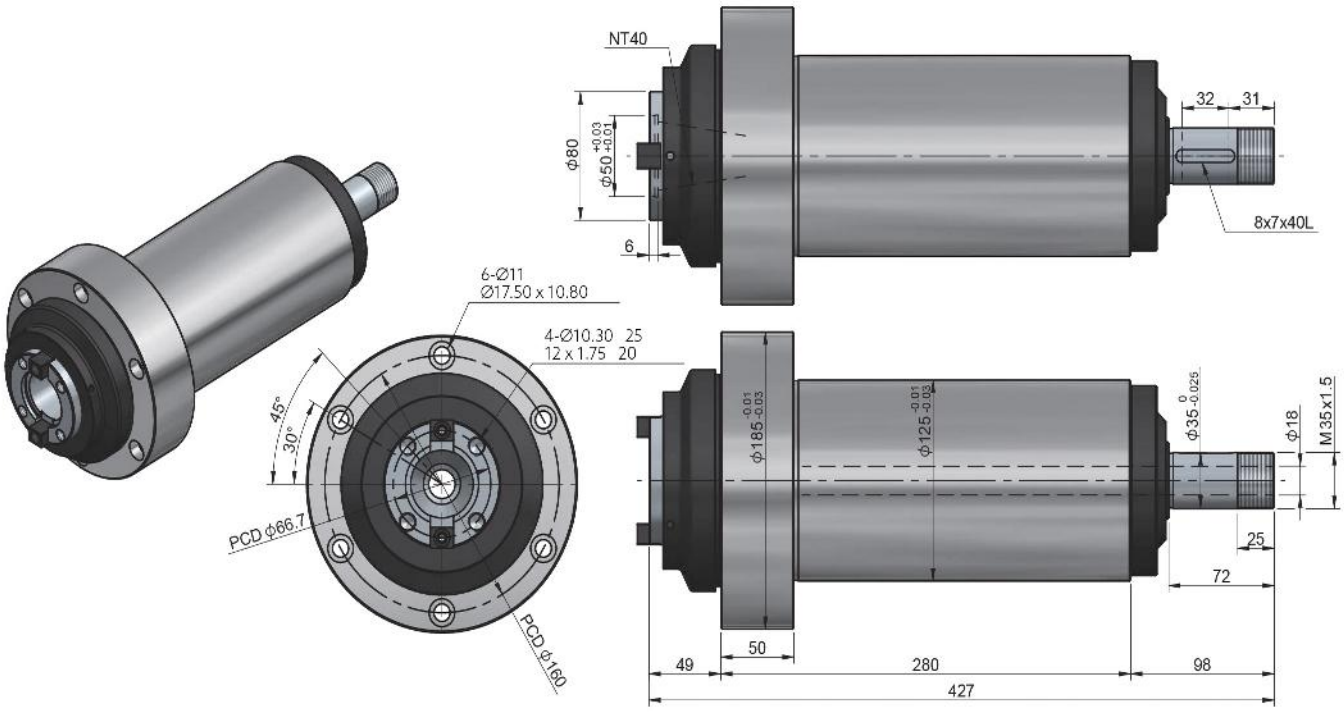

SRR55H-MT4

TOTAL WEIGHT	31 Kg

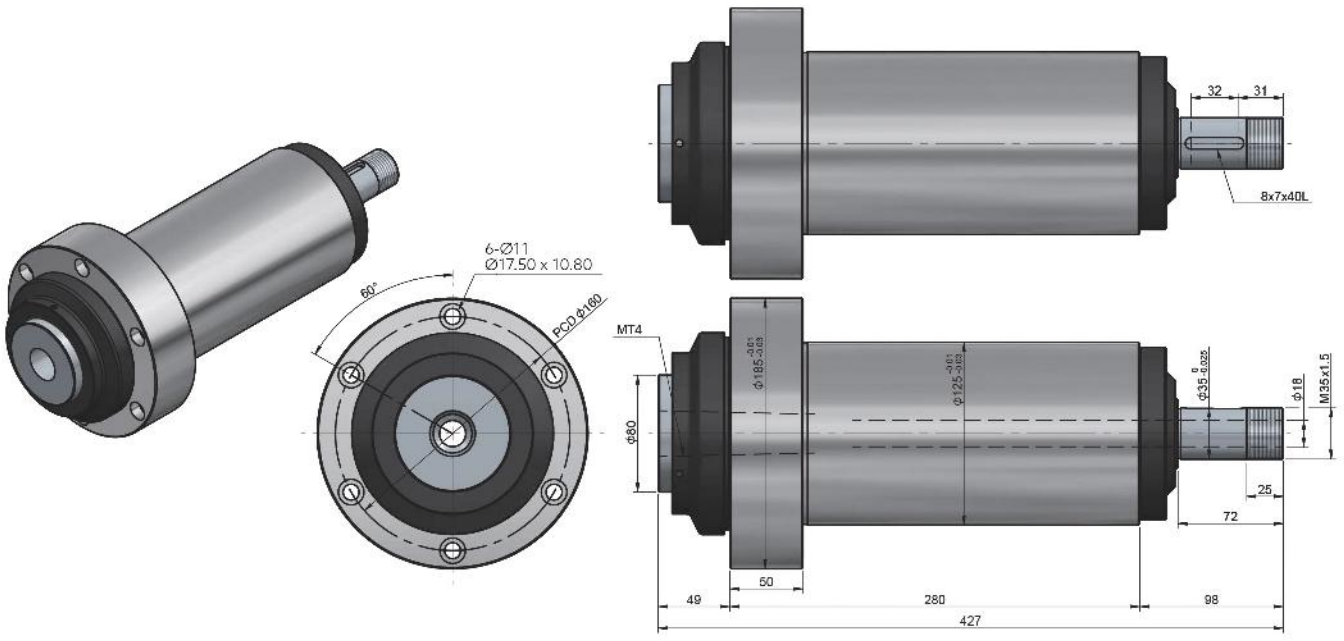

SRR-60

High Performance Boring & Milling Spindle

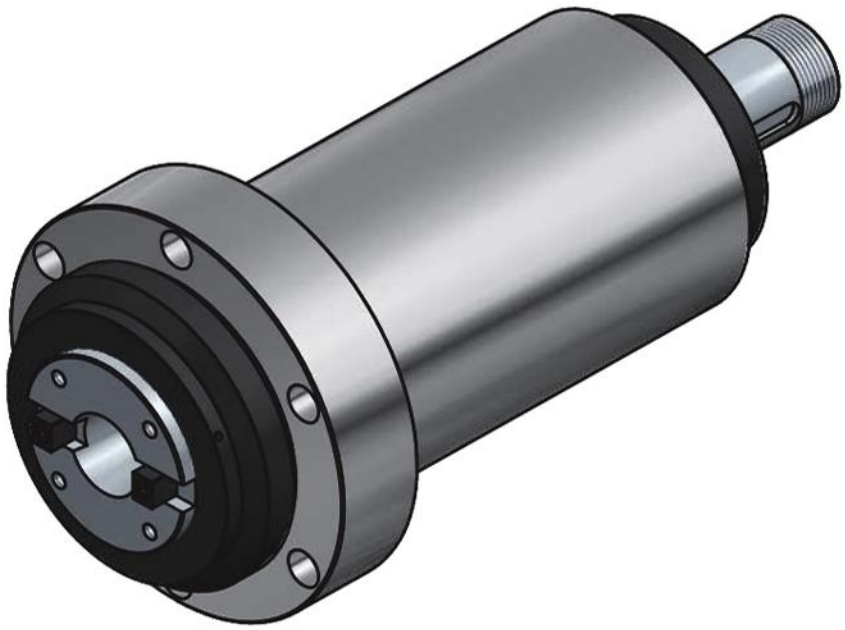

Characteristics & Dimensions

Model	SRR60
Spindle Model	*NT40 - A2-4 - FB50*
Maximum Speed (r.p.m.)	*1,800*
Bearings Model	*32211 / 6211Z* *32212 / 6212Z*
Maximum Power	*Within 5 H.p.*
Raising Temperature	*Within 20°C*

**** Roundness: Within 0.003 millimeters.*
*.**** All dimensions are given in millimeters.*

SRR60-NT40
SRR60-FB50
SRR60-A_2-4

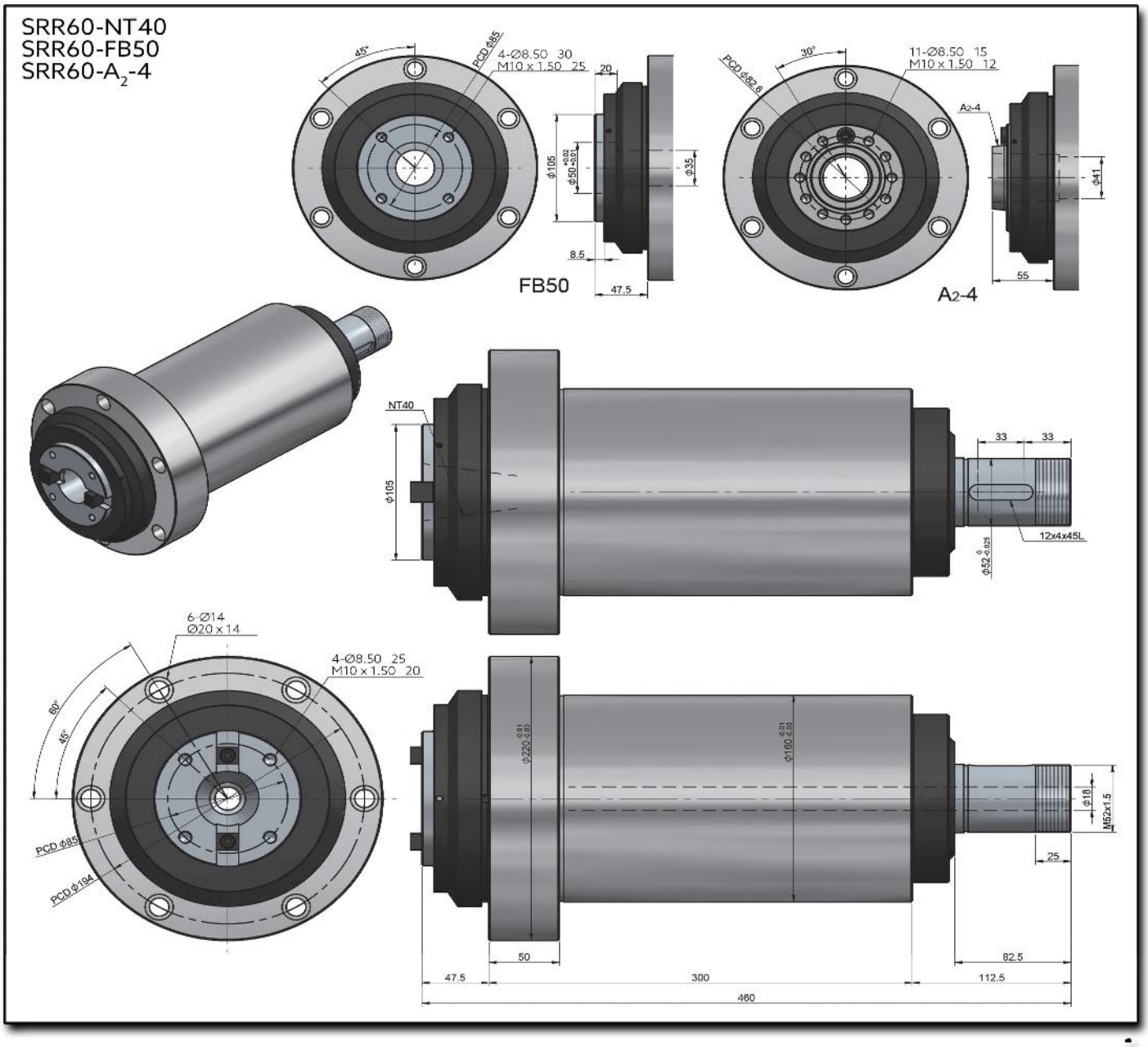

SRR-60H

High Performance Boring & Milling Spindle

(High Speed)

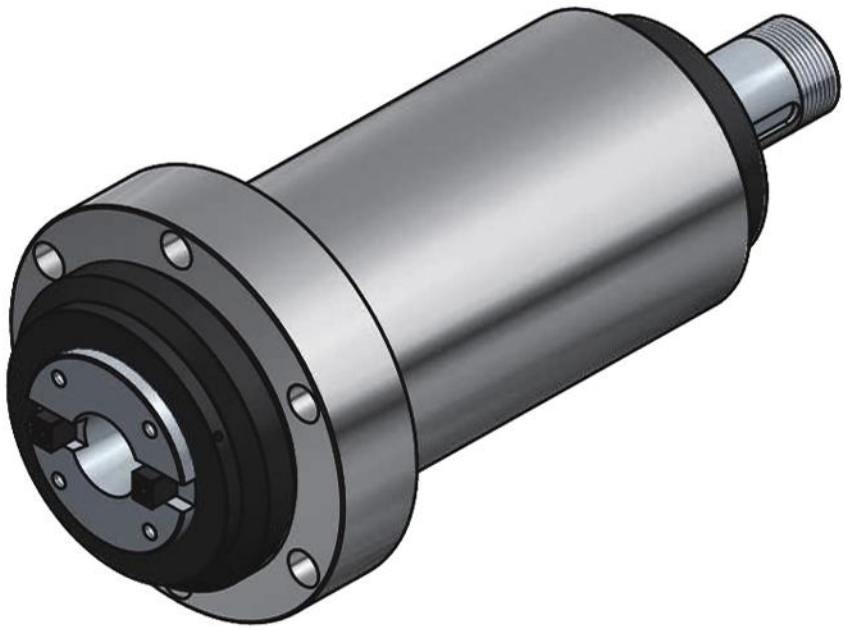

Characteristics & Dimensions

Model	SRR60H
Spindle Model	*NT40 - A2-4 - FB50*
Maximum Speed (r.p.m.)	*5,000*
Bearings Model	*7211 x 2* *7212 x 2*
Maximum Power	*Within 5 H.p.*
Raising Temperature	*Within 20°C*

**** Roundness: Within 0.003 millimeters.*
*.**** All dimensions are given in millimeters.*

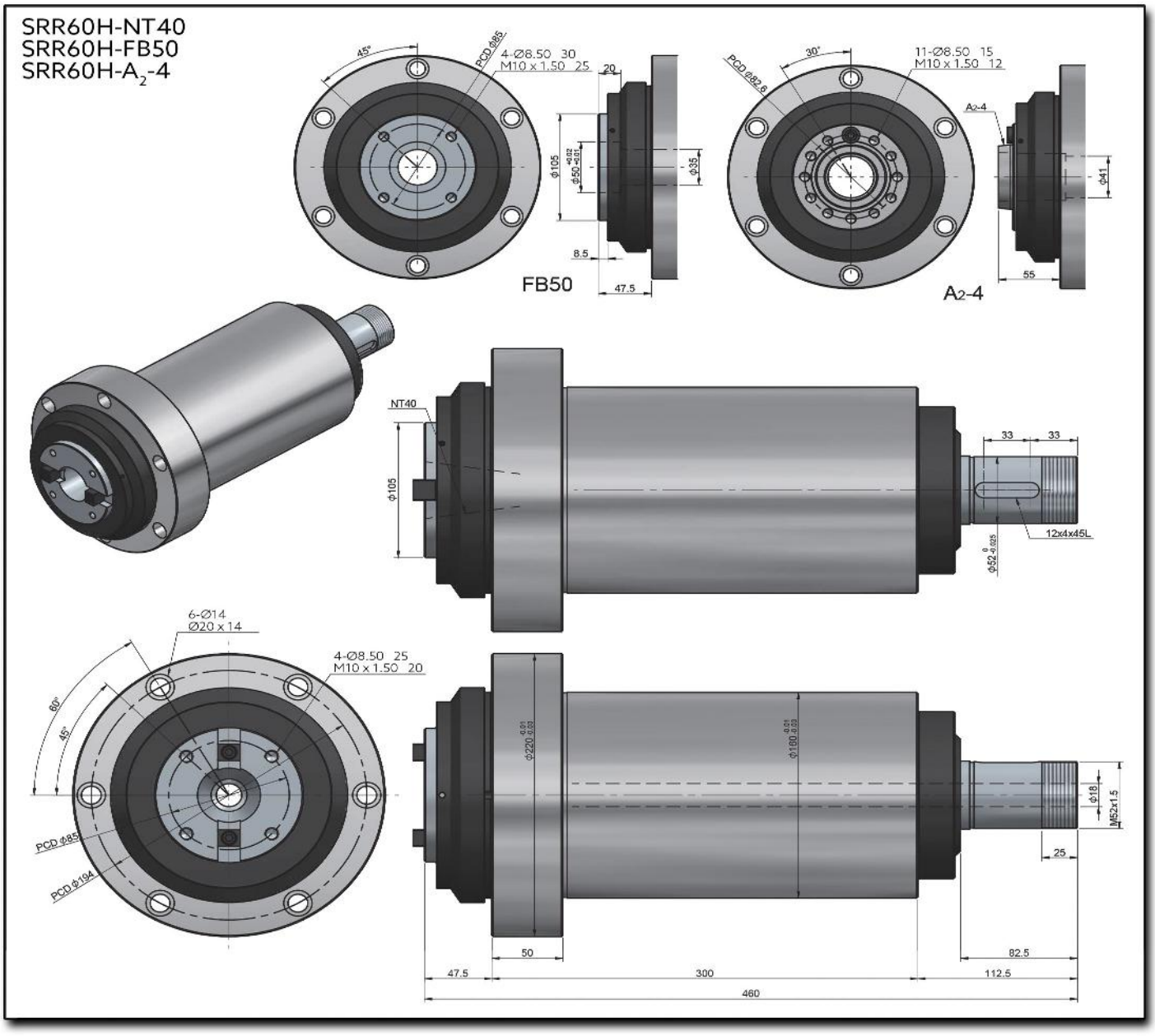
SRR60H-NT40
SRR60H-FB50
SRR60H-A2-4
45°
PCD Ø85
4-Ø8.50 30
M10 x 1.50 25
20
Φ105
Φ50 +0.02 +0.01
Φ35
8.5
47.5
FB50
30°
PCD Ø82.6
11-Ø8.50 15
M10 x 1.50 12
A2-4
Φ41
55
A2-4
NT40
Φ105
33
33
12x4x45L
Φ52 0 -0.025
6-Ø14
Ø20 x 14
4-Ø8.50 25
M10 x 1.50 20
60°
45°
PCD Φ85
PCD Φ194
Φ220 0.01 0.03
Φ160 0.01 0.03
Φ18
M52x1.5
25
50
82.5
47.5
300
112.5
460

SRR-75

High Performance Boring & Milling Spindle

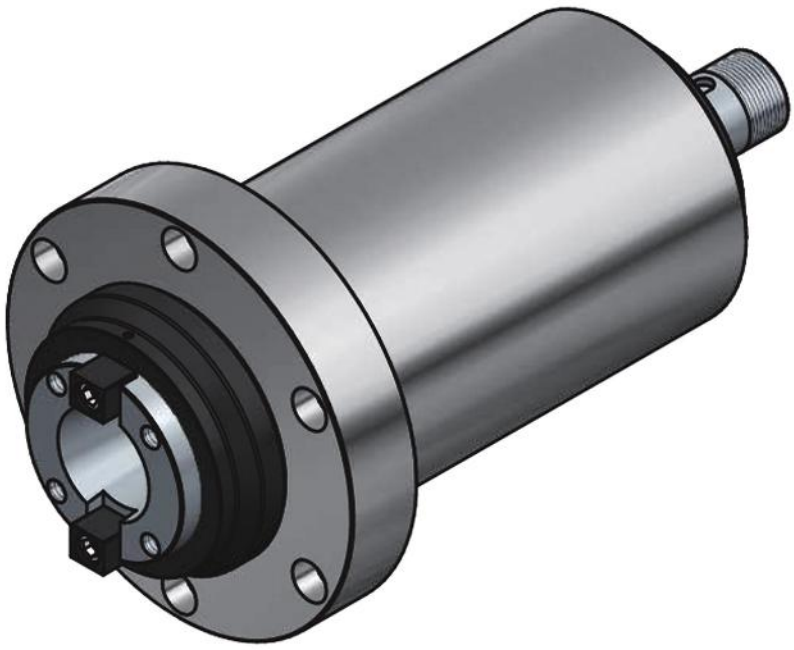

SRR75-NT50

TOTAL WEIGHT	78 Kg

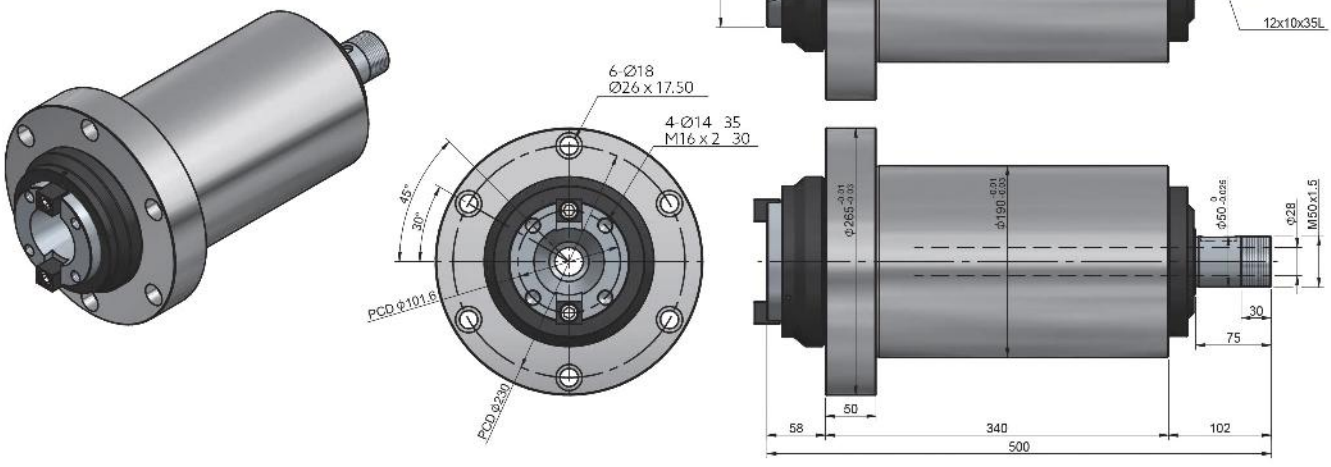

Characteristics & Dimensions

Model	SRR75
Spindle Model	*NT50 / FB75*
Maximum Speed (r.p.m.)	*1,600*
Bearings Model	*32015 / 6015Z* *32014 / 6014Z*
Maximum Power	*Within 5 H.p.*
Raising Temperature	*Within 20°C*

**** Roundness: Within 0.003 millimeters.*
*.**** All dimensions are given in millimeters.*

SRR75-FB75

TOTAL WEIGHT	78 Kg

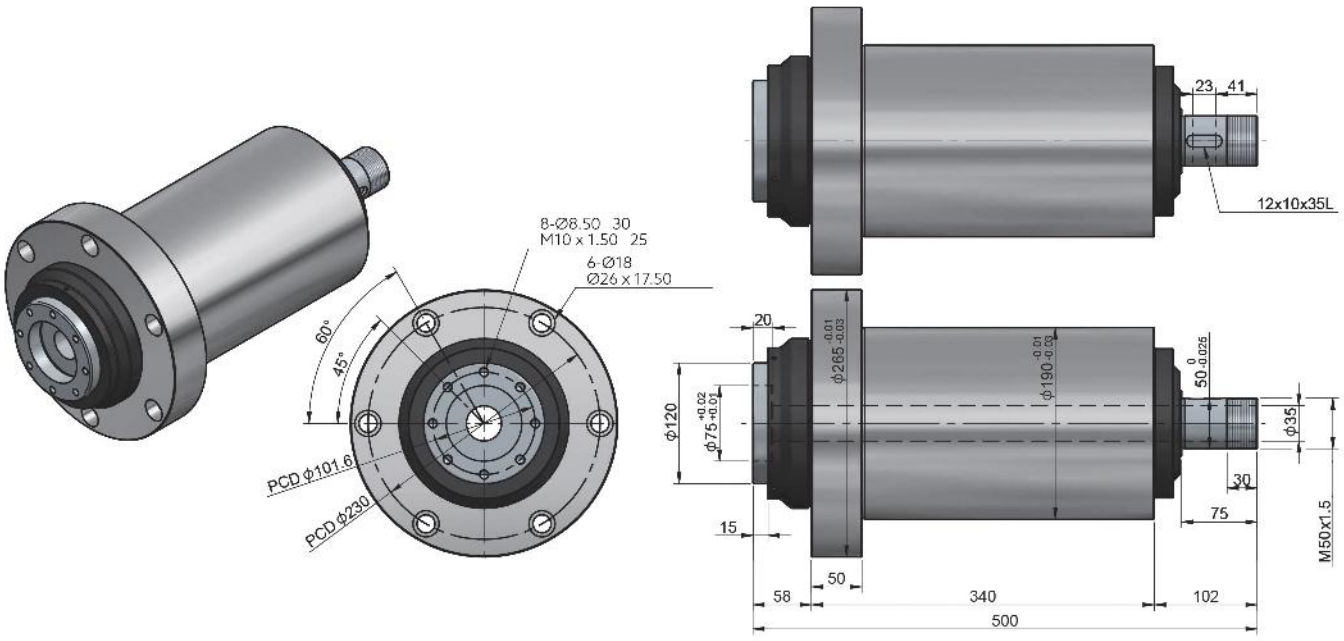

SRR-75H

High Performance Boring & Milling Spindle

(High Speed)

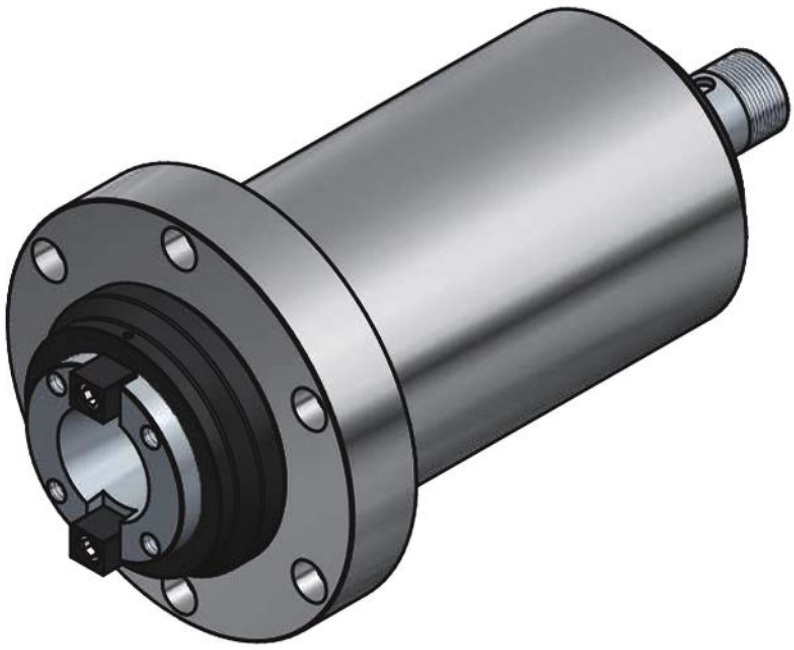

Characteristics & Dimensions

Model	SRR75H
Spindle Model	*NT50 / FB75*
Maximum Speed (r.p.m.)	*4,000*
Bearings Model	*7015 x 2* *7014 x 2*
Maximum Power	*Within 5 H.p.*
Raising Temperature	*Within 20°C*

**** Roundness: Within 0.003 millimeters.*
*.**** All dimensions are given in millimeters.*

SRR75-NT50

TOTAL WEIGHT	78 Kg

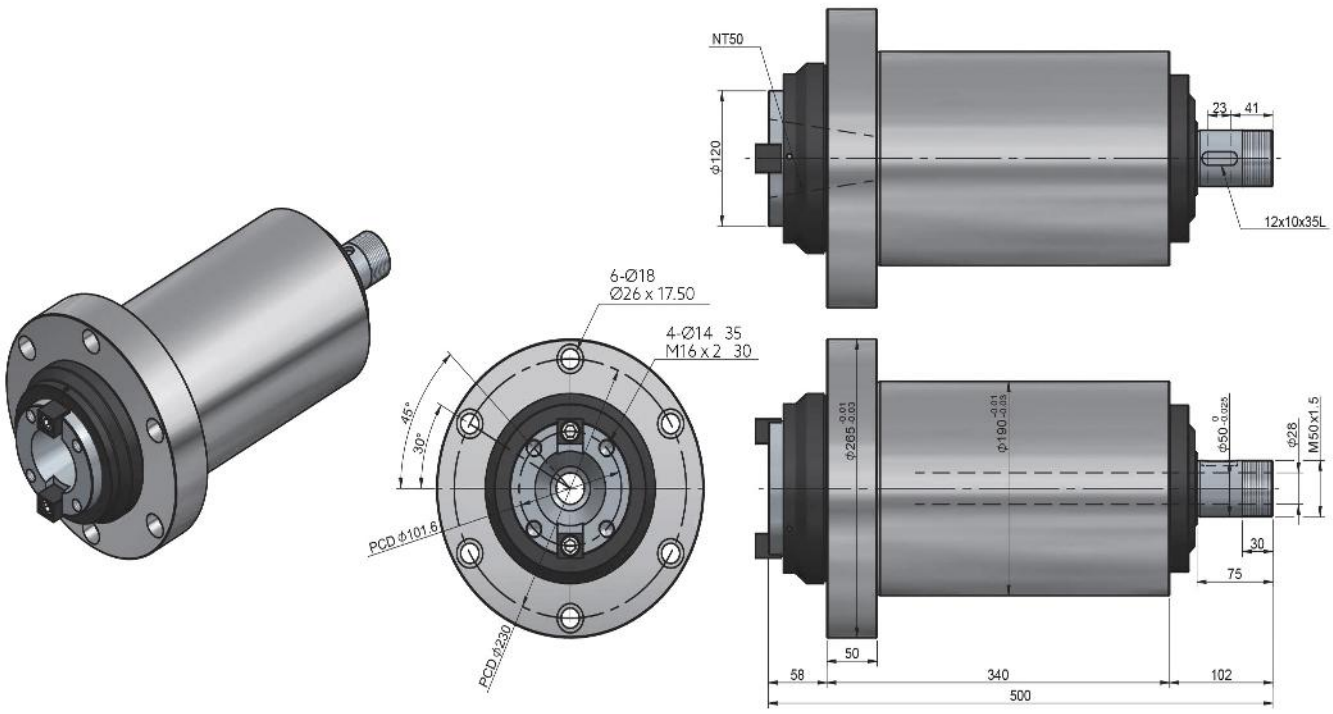

SRR75H-FB75

TOTAL WEIGHT	78 Kg

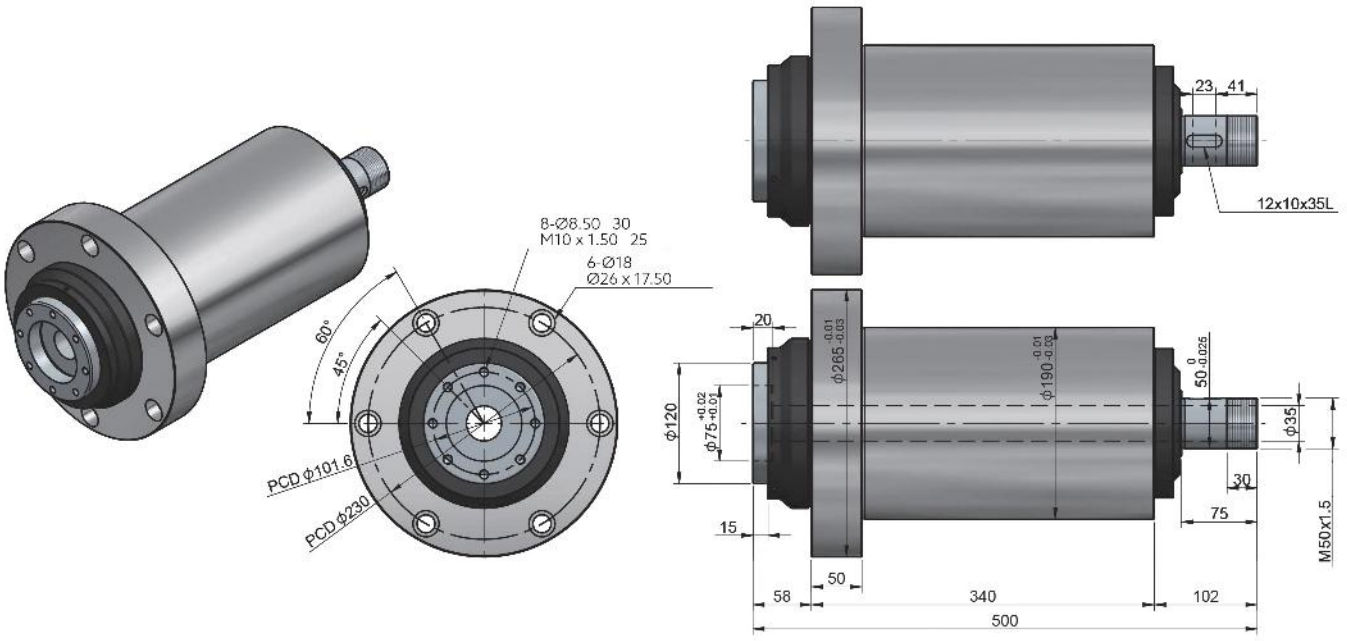

SRR-80

High Performance Boring & Milling Spindle

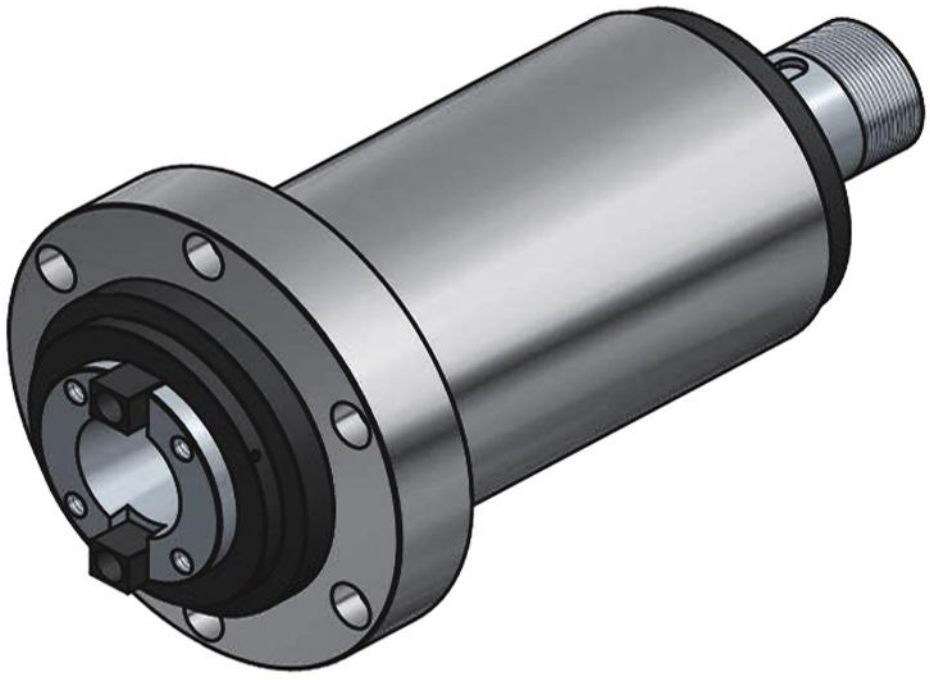

Characteristics & Dimensions

Model	SRR80
Spindle Model	*NT50 | A_2-5 | FB75*
Maximum Speed (r.p.m.)	*1,200*
Bearings Model	*32216 x 2* *6216Z x 2*
Maximum Power	*Within 7.5 H.p.*
Raising Temperature	*Within 20°C*

**** Roundness: Within 0.003 millimeters.*
*.**** All dimensions are given in millimeters.*

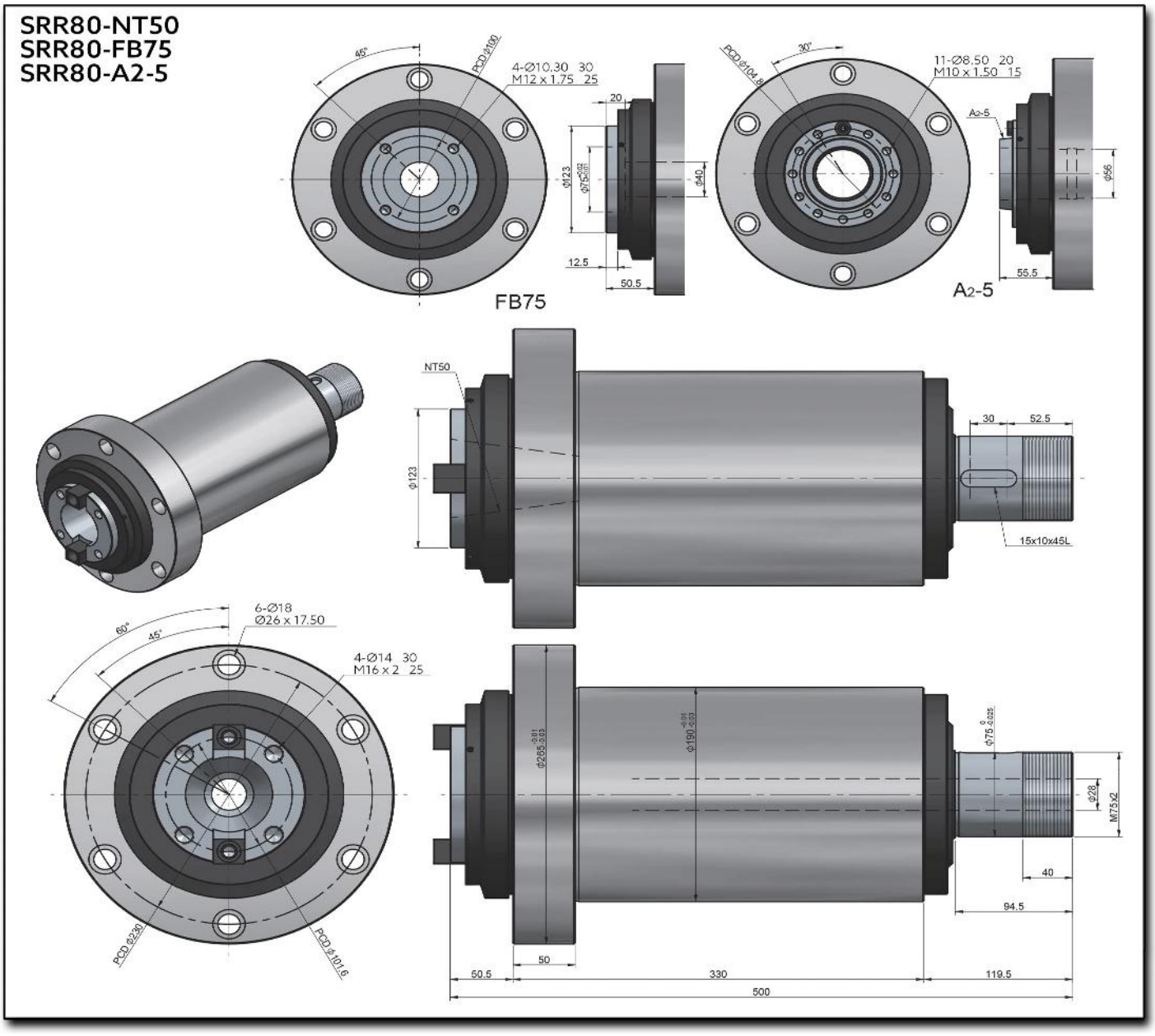
SRR80-NT50
SRR80-FB75
SRR80-A2-5
45°
PCD ø100
4-Ø10.30 30
M12 x 1.75 25
20
ø123
ø40
12.5
50.5
FB75
30°
11-Ø8.50 20
M10 x 1.50 15
A2-5
ø56
55.5
NT50
ø123
30
52.5
15x10x45L
60°
45°
6-Ø18
Ø26 x 17.50
4-Ø14 30
M16 x 2 25
PCD ø230
PCD ø101.6
ø190
ø75
ø28
M75x2
40
94.5
50
50.5
330
119.5
500

SRR-80H

High Performance Boring & Milling Spindle

(High Speed)

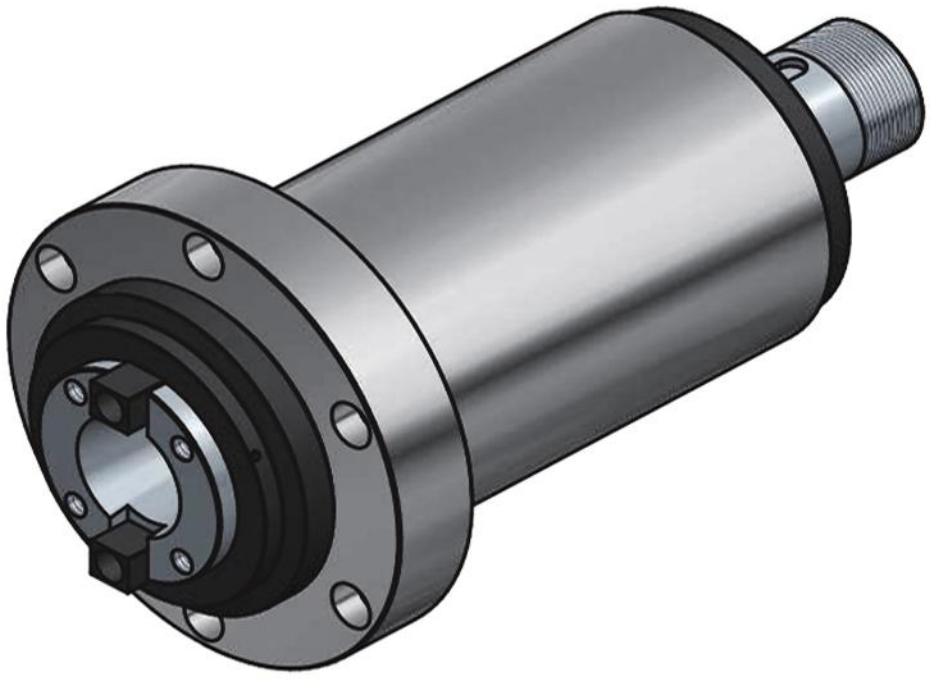

Characteristics & Dimensions

Model	SRR80H
Spindle Model	*NT50 | A_2-5 | FB75*
Maximum Speed (r.p.m.)	*3,000*
Bearings Model	*7216 x 4*
Maximum Power	*Within 7.5 H.p.*
Raising Temperature	*Within 20°C*

**** Roundness: Within 0.003 millimeters.*
*.**** All dimensions are given in millimeters.*

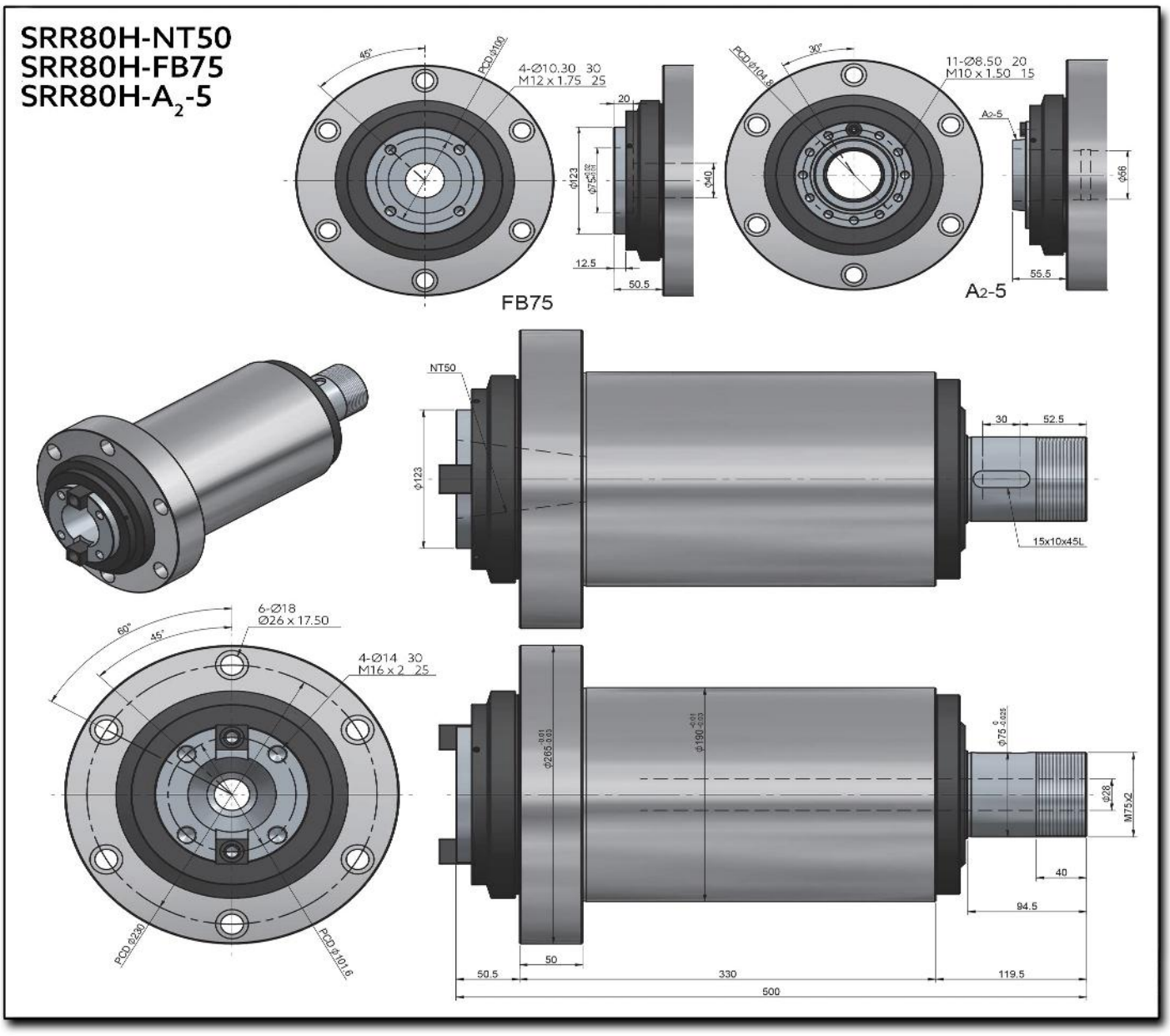
SRR80H-NT50
SRR80H-FB75
SRR80H-A2-5
45°
PCD Ø100
4-Ø10.30 30
M12 x 1.75 25
20
Ø123
Ø75
Ø40
12.5
50.5
FB75
PCD Ø104.5
30°
11-Ø8.50 20
M10 x 1.50 15
A2-5
Ø66
55.5
A2-5
NT50
Ø123
30
52.5
15x10x45L
60°
45°
6-Ø18
Ø26 x 17.50
4-Ø14 30
M16 x 2 25
PCD Ø230
PCD Ø101.6
Ø265
Ø190
Ø75
Ø28
M75x2
40
94.5
50
50.5
330
119.5
500

SSD SERIES

FACING SERVO
COMPACT SPINDLES
FLANGE TYPE

SSD03-60

Drilling & Tapping Servo Spindle Head

Patent No. M446677

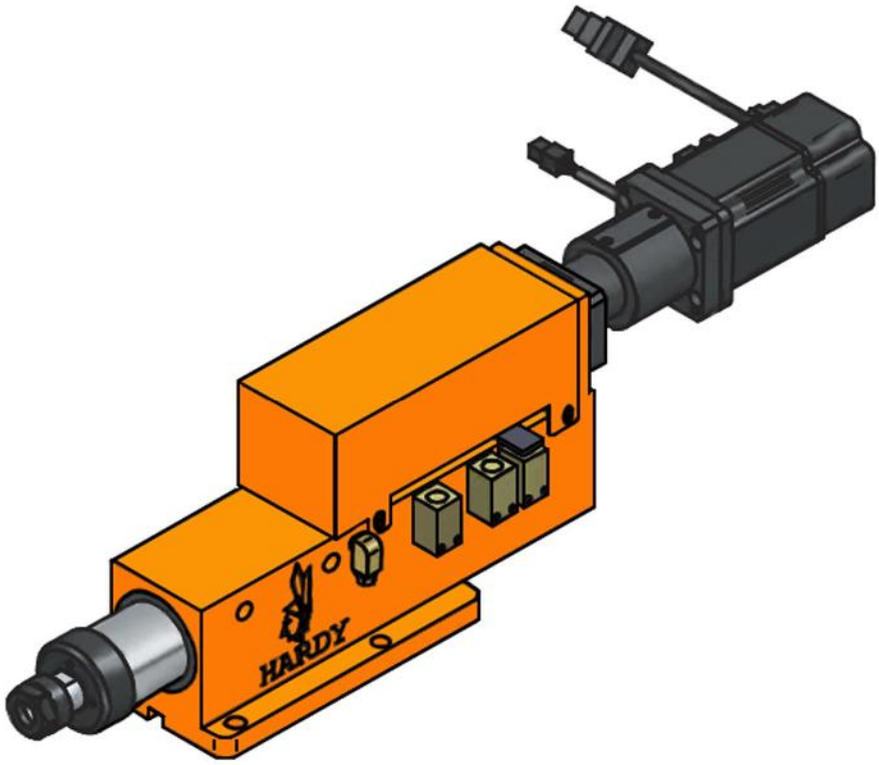

Characteristics & Dimensions

MODEL	SSD03-60
Drilling Capacity (S45C)	*Ø 6*
Maximum Stroke	*60 mm.*
Maximum Speed (r.p.m.)	*10,000*
Maximum Power (3 Phases)	*½ Hp x 2P*
Spindle Pulley	*5J - 200*
Spindle Bearings	*6002ZZ x 4*
Pulley Bearings	*60002ZZ x 3*
Ball Screw Block Bearings	*7001 x 2*
Ball Screw Block Seals	*TC15-24-5 x 1, TC18-30-6 x 1*
Front Cover Seal	*TC45-55-8 x 1*
Piston Seal	*TC22-30-7 x 1*
Ball Screw	*Ø 16 x 5 x C5*

*** Roundness ≤ 0.003 mm.*
**** All dimensions are given in millimeters.*

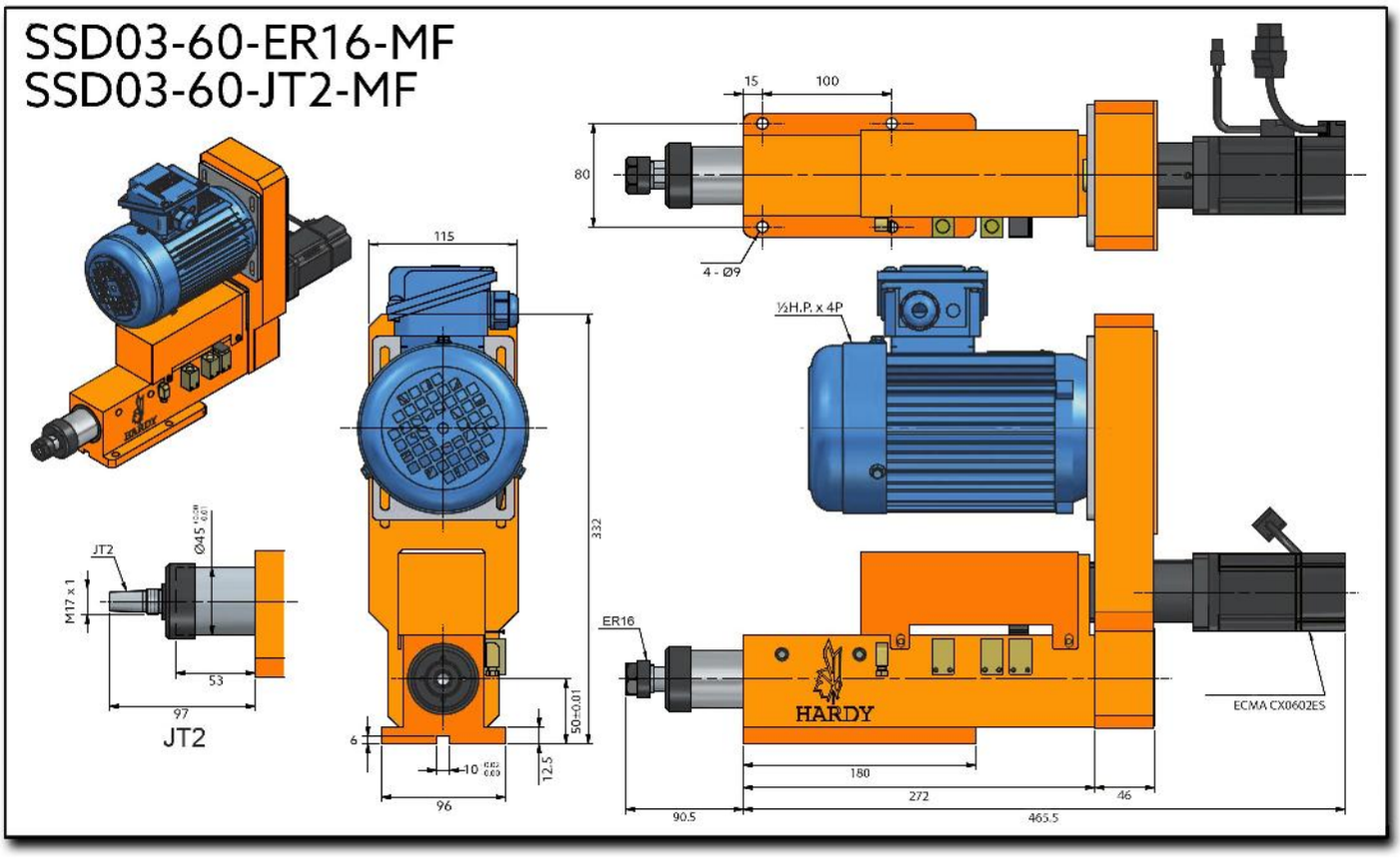
SSD03-60-ER16-MF
SSD03-60-JT2-MF
15
100
80
4 - Ø9
115
½H.P. x 4P
332
JT2
M17 x 1
53
97
JT2
6
50-0.01
12.5
96
ER16
HARDY
ECMA CX0602ES
180
272
46
90.5
465.5

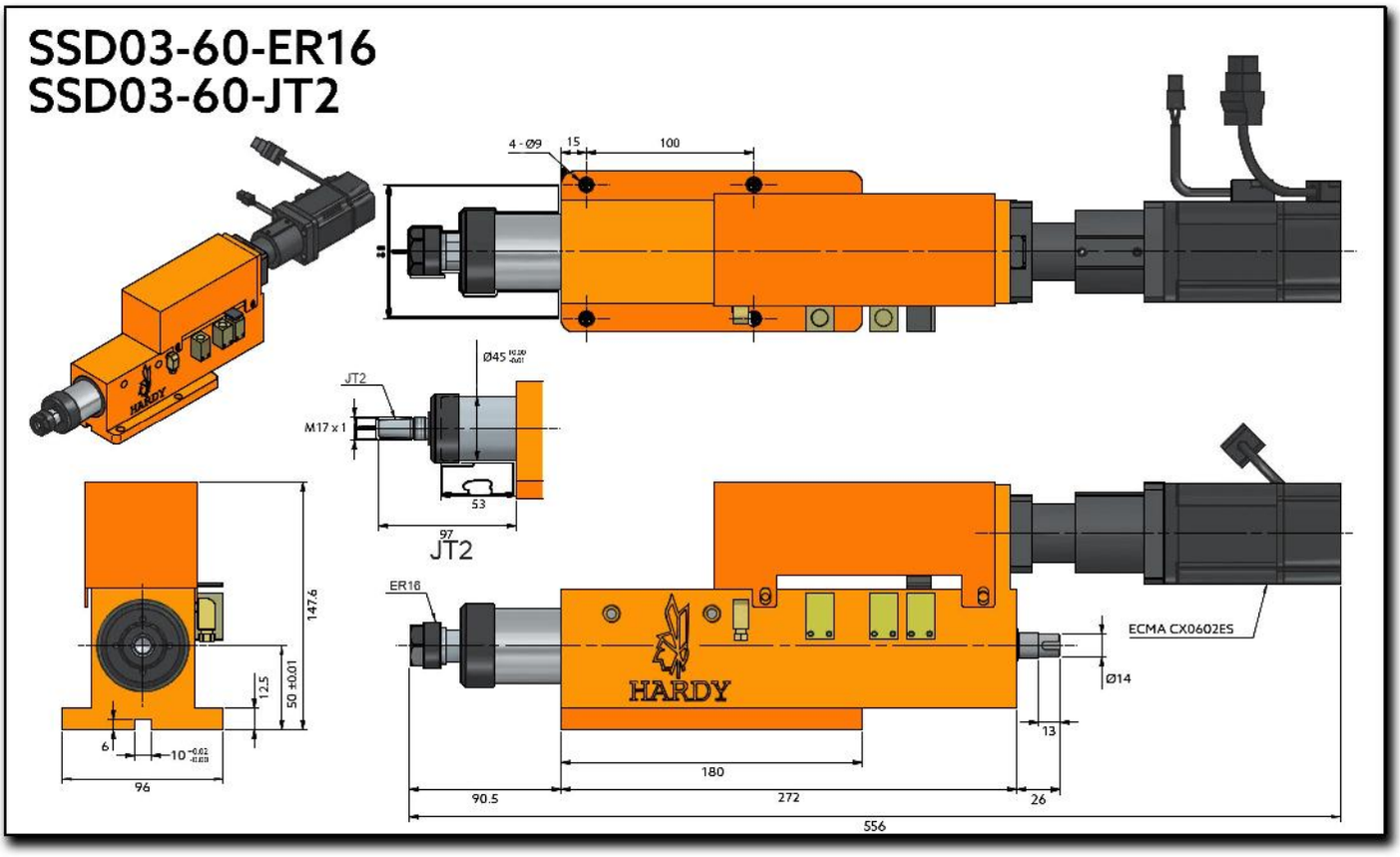
SSD03-60-ER16
SSD03-60-JT2
4 - Ø9
15
100
Ø45
JT2
M17 x 1
53
97
JT2
147.6
12.5
50 ±0.01
6
10
96
ER16
HARDY
ECMA CX0602ES
Ø14
13
180
90.5
272
26
556

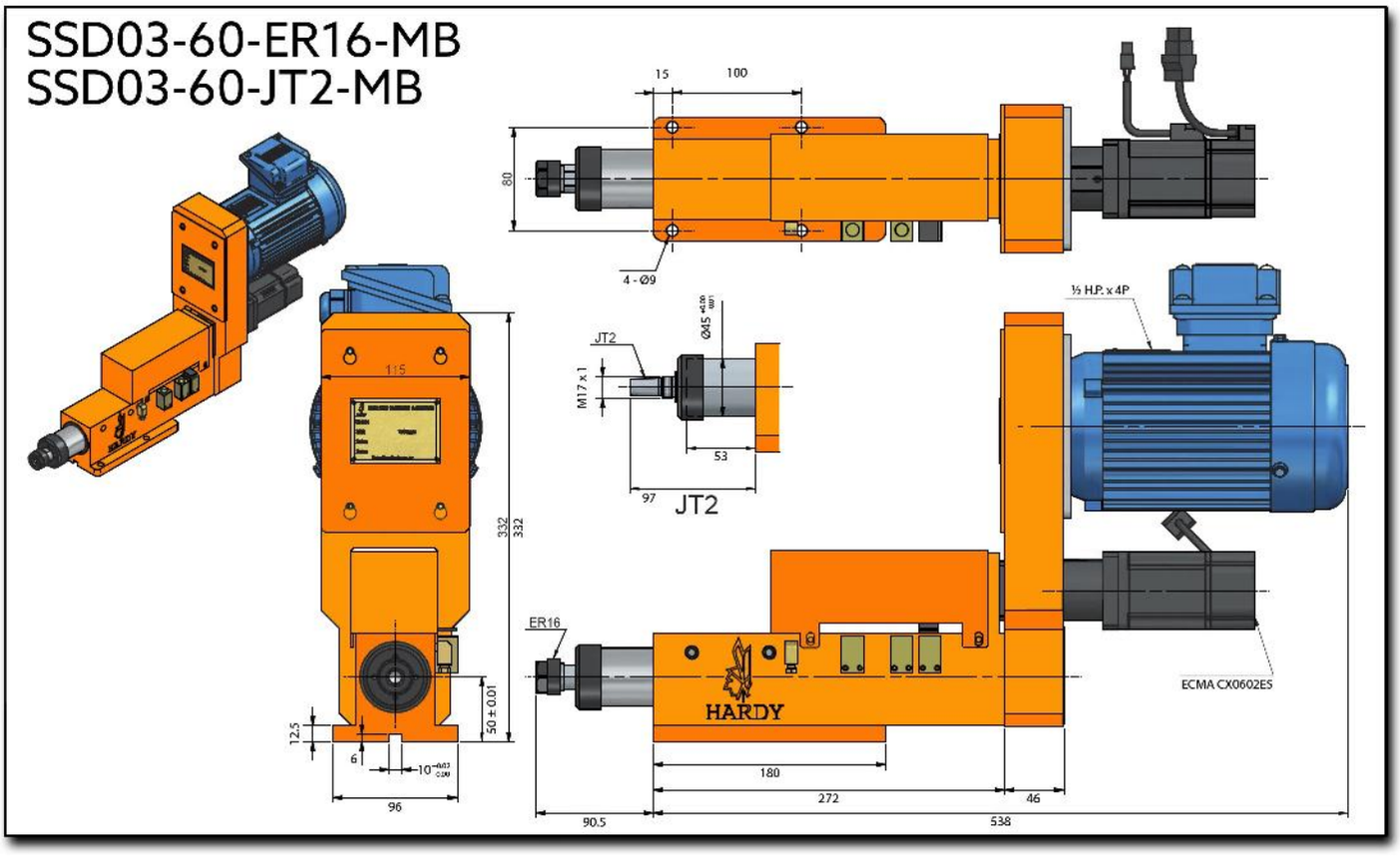
SSD03-60-ER16-MB
SSD03-60-JT2-MB
15
100
80
4 - Ø9
JT2
M17 x 1
53
97
JT2
½ H.P. x 4P
115
332
332
50 ± 0.01
12.5
6
96
ER16
HARDY
ECMA CX0602ES
180
272
46
90.5
538

SSD03-80

Drilling & Tapping Servo Spindle Head

Patent No. M446677

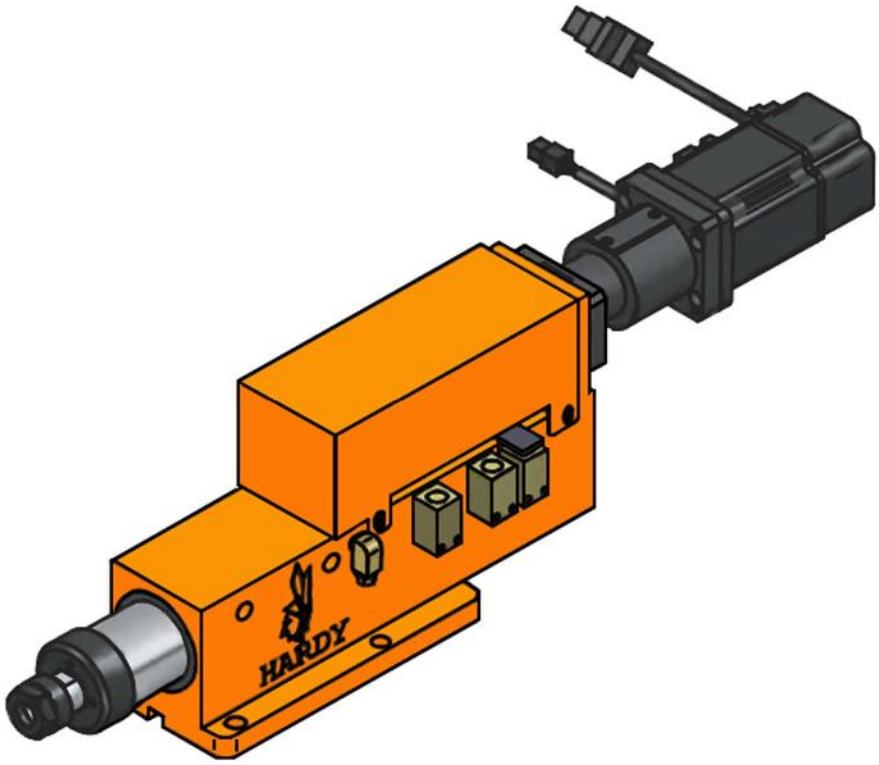

Characteristics & Dimensions

MODEL	SSD03-80
Drilling Capacity (S45C)	*Ø 6*
Maximum Stroke	*80 mm.*
Maximum Speed (r.p.m.)	*10,000*
Maximum Power (3 Phases)	*½ Hp x 2P*
Spindle Pulley	*5J - 200*
Spindle Bearings	*6002ZZ x 4*
Pulley Bearings	*60002ZZ x 3*
Ball Screw Block Bearings	*7001 x 2*
Ball Screw Block Seals	*TC15-24-5 x 1, TC18-30-6 x 1*
Front Cover Seal	*TC45-55-8 x 1*
Piston Seal	*TC22-30-7 x 1*
Ball Screw	*Ø 16 x 5 x C5*

*** Roundness ≤ 0.003 mm.*
**** All dimensions are given in millimeters.*

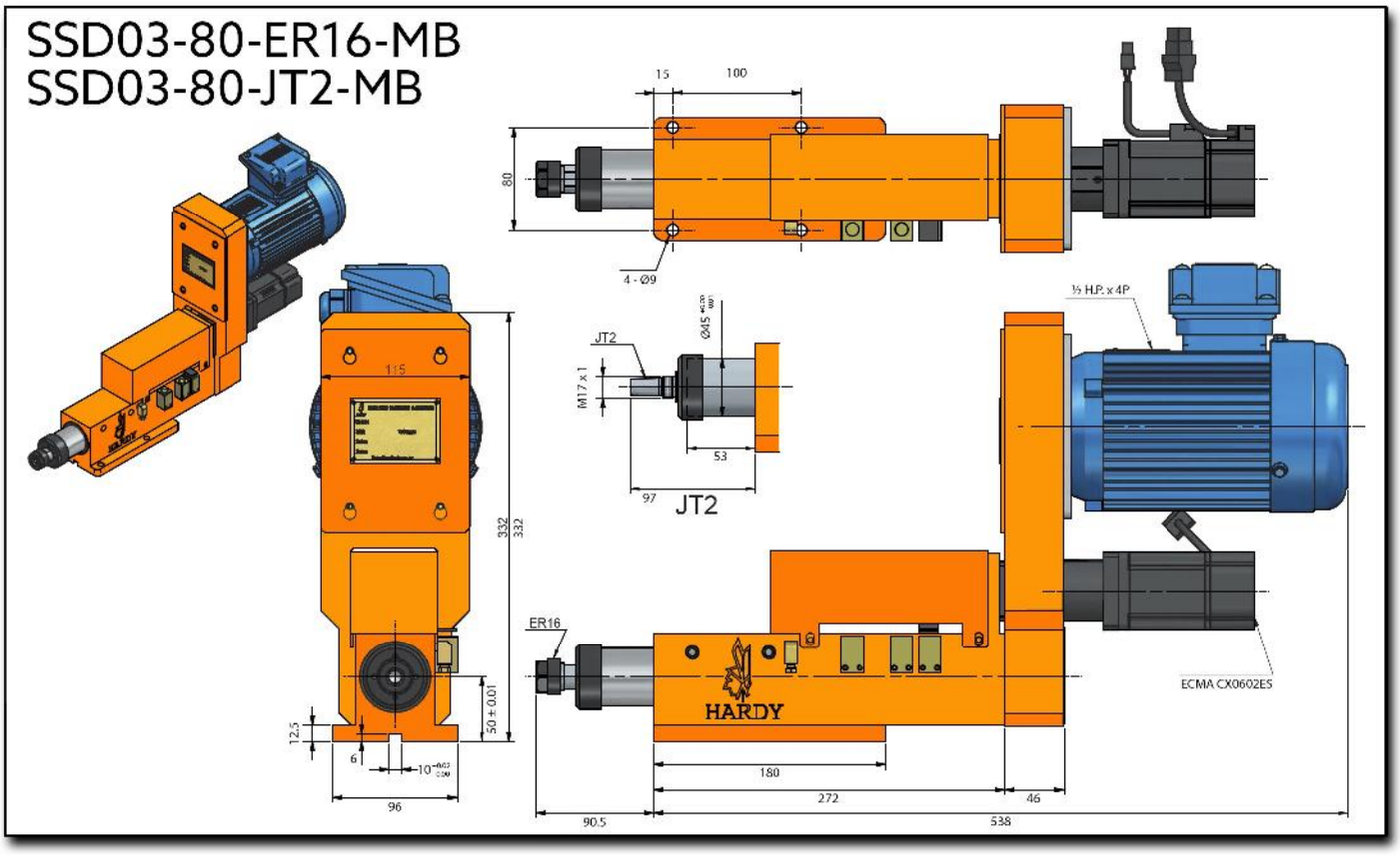
SSD03-80-ER16-MB
SSD03-80-JT2-MB
15
100
80
4 - Ø9
JT2
M17 x 1
53
97
JT2
115
332
332
50 ± 0.01
12.5
6
96
ER16
HARDY
½ H.P. x 4P
ECMA CX0602ES
180
272
46
90.5
538

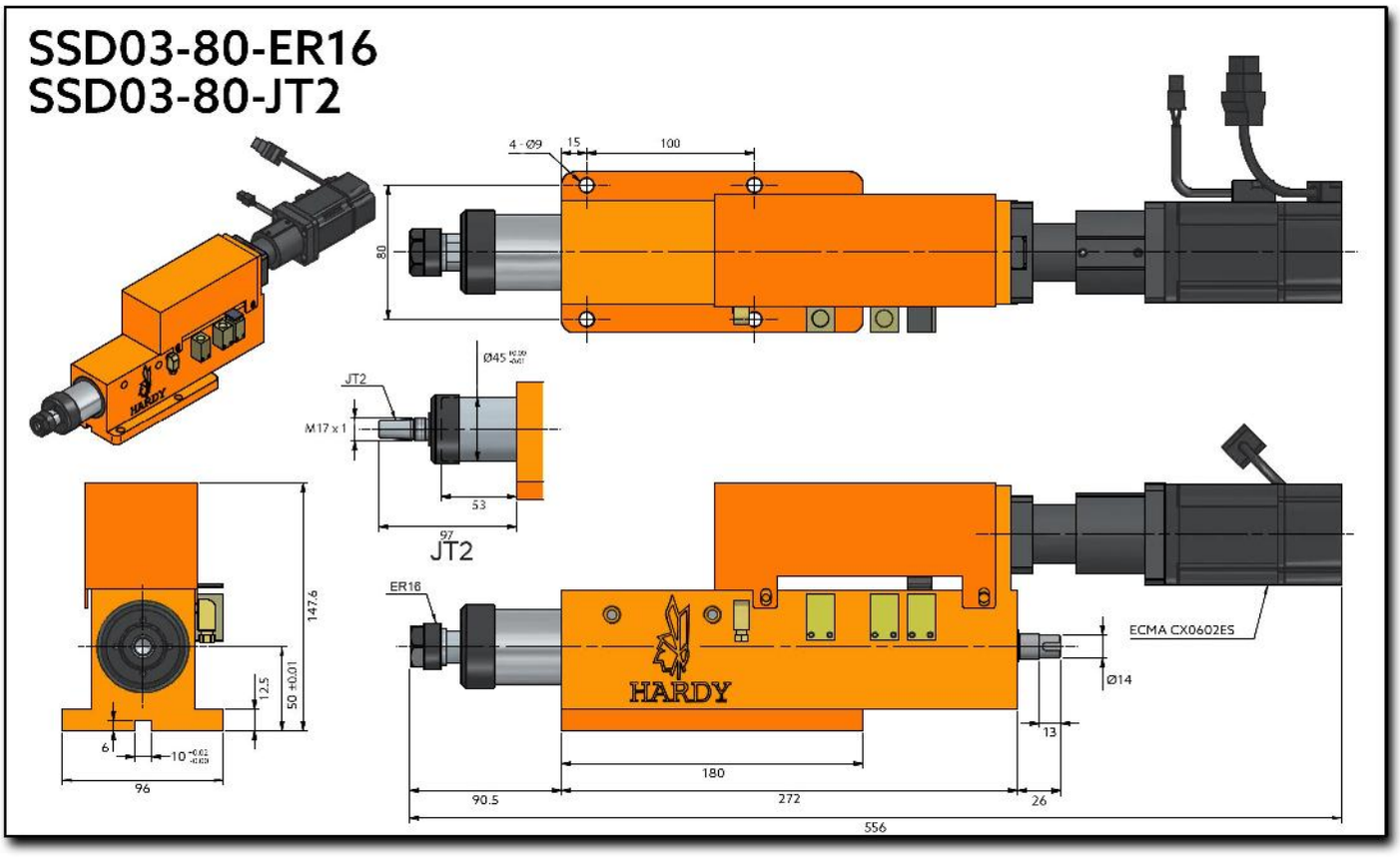
SSD03-80-ER16
SSD03-80-JT2
4 - Ø9
15
100
80
Ø45
JT2
M17 x 1
53
97
JT2
ER16
HARDY
ECMA CX0602ES
Ø14
13
180
90.5
272
26
556
147.6
12.5
50 +0.01
6
10
96

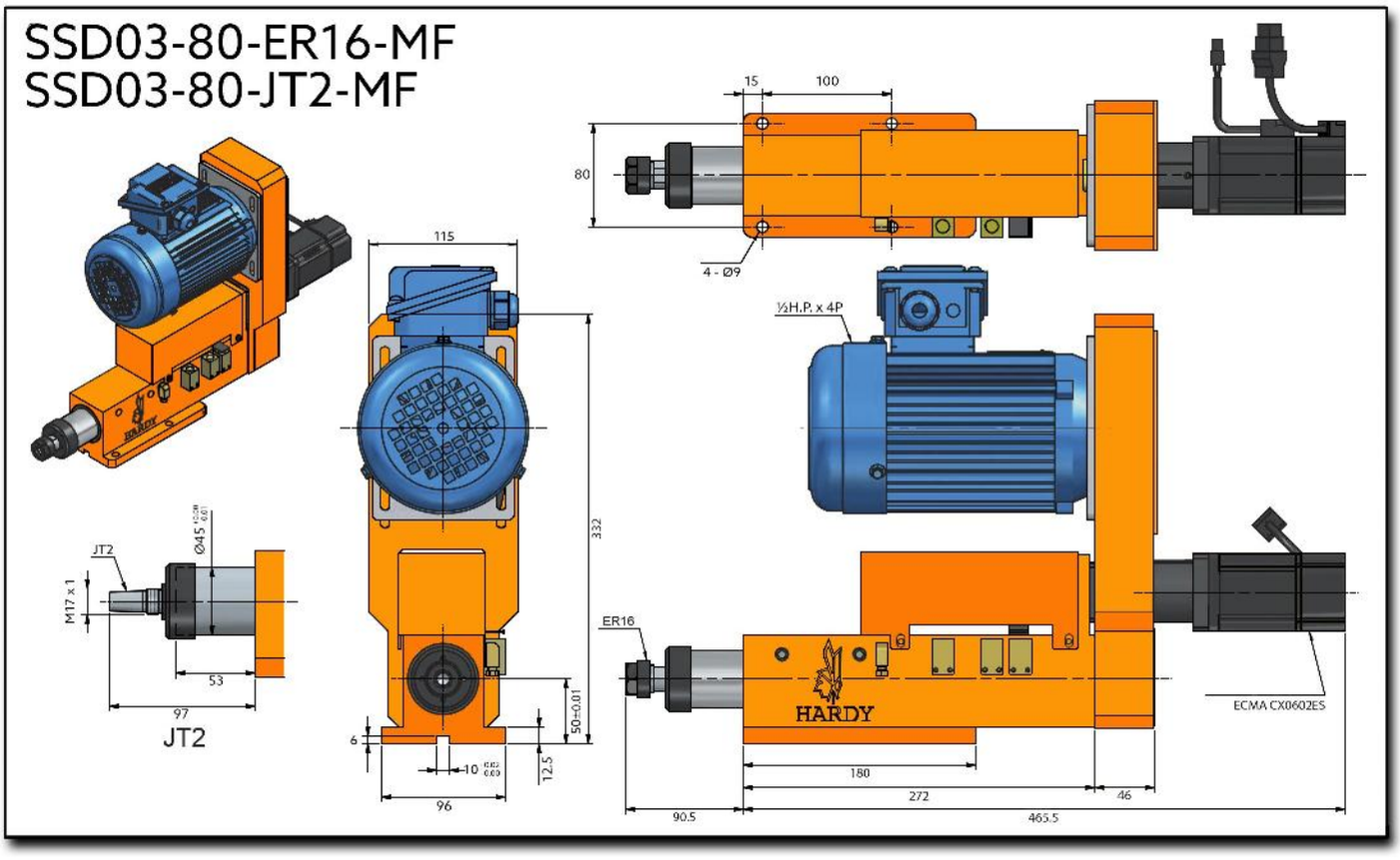
SSD03-80-ER16-MF
SSD03-80-JT2-MF
15
100
80
4 - Ø9
115
½H.P. x 4P
332
JT2
Ø45
M17 x 1
53
97
JT2
6
10
12.5
50-0.01
96
ER16
HARDY
ECMA CX0602ES
180
272
46
90.5
465.5

SSD05-85

Drilling & Tapping Servo Spindle Head

Patent No. M446677

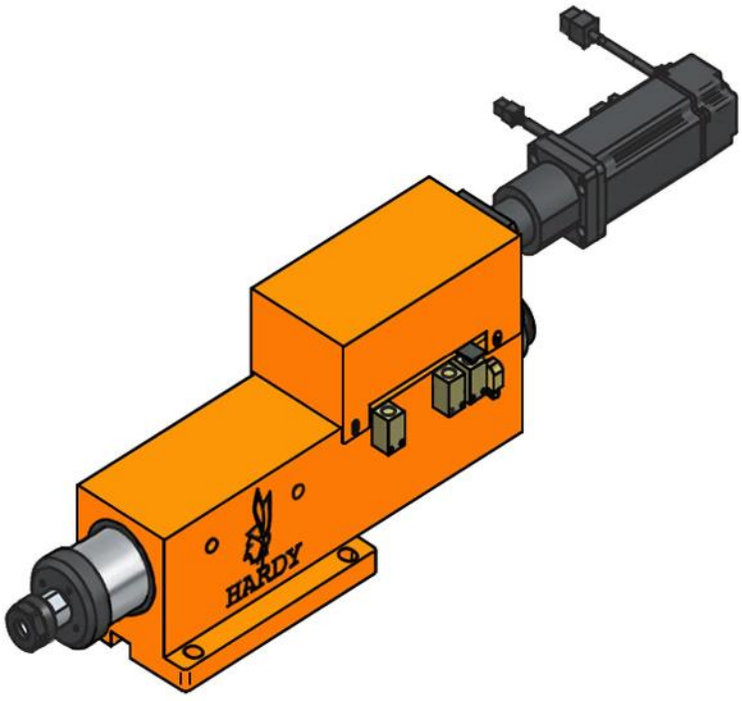

Characteristics & Dimensions

MODEL	SSD05-85
Drilling Capacity (S45C)	*Ø 13*
Maximum Stroke	*85 mm.*
Maximum Speed (r.p.m.)	*5,000*
Maximum Power (3 Phases)	*1 Hp x 2P*
Spindle Pulley	*5M - 615*
Spindle Bearings	*6004ZZ x 4*
Pulley Bearings	*60004ZZ x 3*
Ball Screw Block Bearings	*7001 x 2*
Ball Screw Block Seals	*TC15-24-5 x 1, TC18-30-6 x 1*
Front Cover Seal	*TC60-70-10 x 1*
Piston Seal	*DH-28-36-6 | 4.5 x 1*
Ball Screw	*Ø 16 x 5 x C5*

*** Roundness ≤ 0.003 mm.*
**** All dimensions are given in millimeters.*

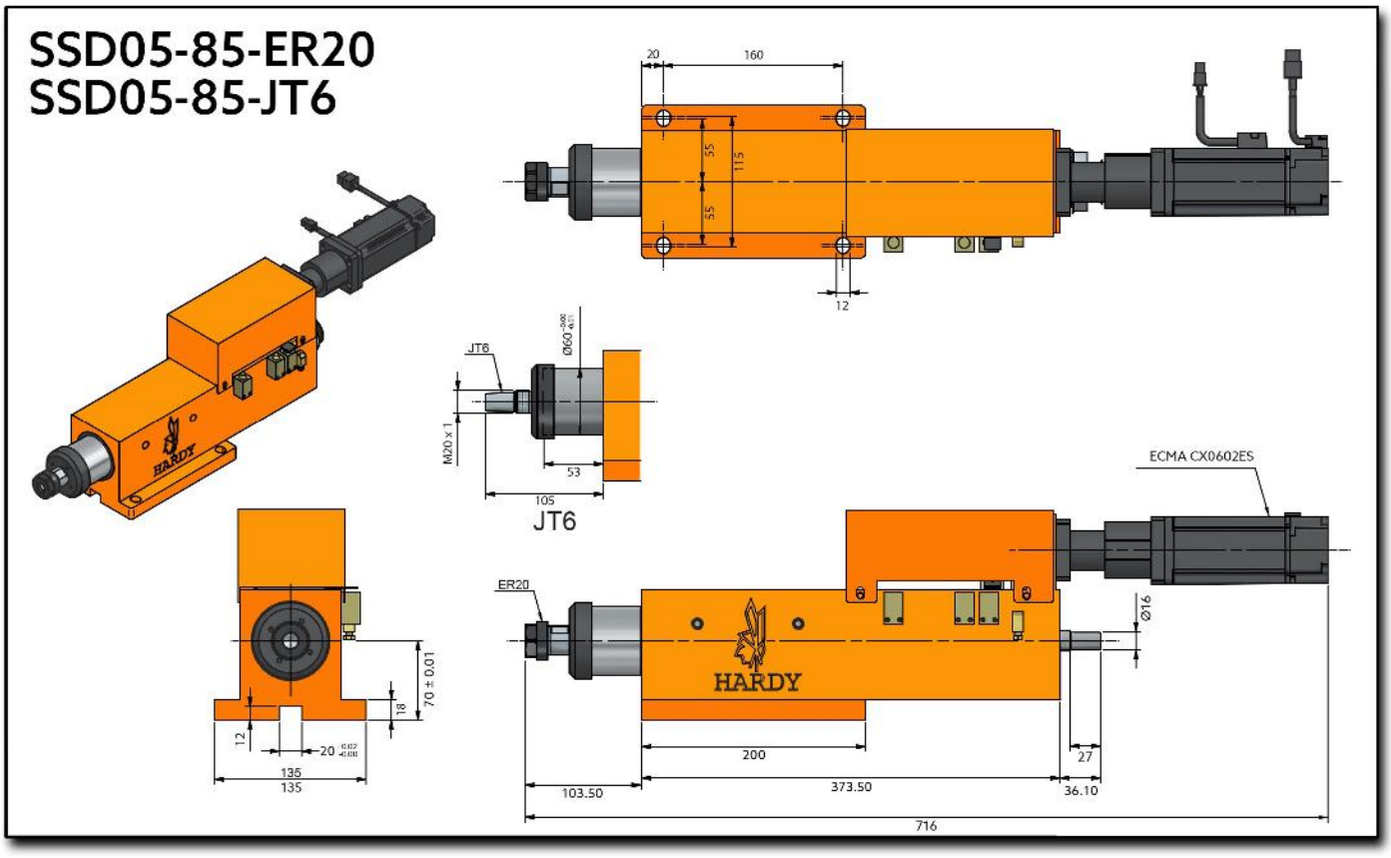
SSD05-85-ER20
SSD05-85-JT6
20
160
55
115
55
12
JT6
Ø60
M20 x 1
53
105
JT6
ECMA CX0602ES
ER20
HARDY
Ø16
200
27
103.50
373.50
36.10
716
70 ± 0.01
18
12
20
135
135

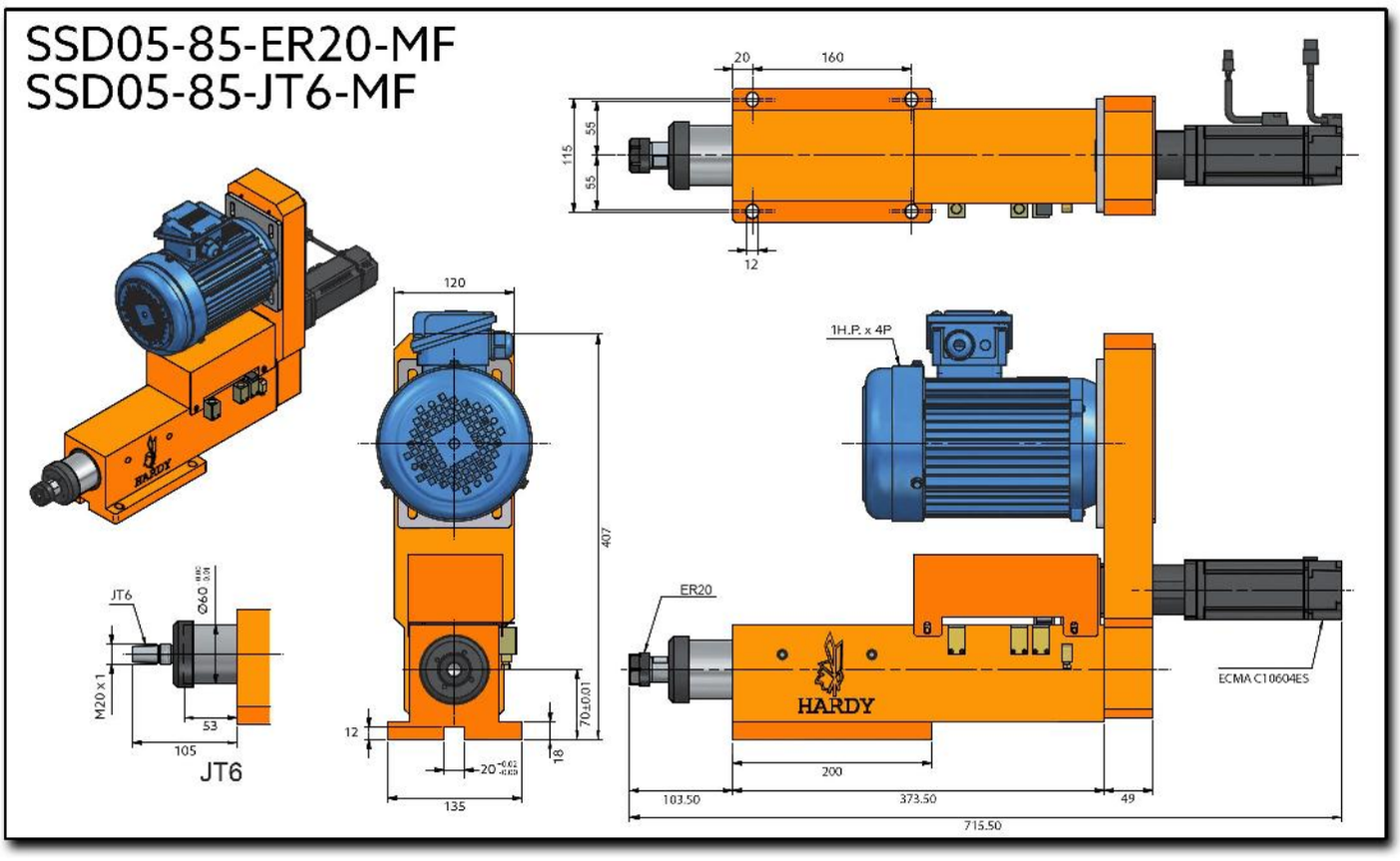
SSD05-85-ER20-MF
SSD05-85-JT6-MF
20
160
115
55
55
12
120
407
70±0.01
18
12
135
1H.P. x 4P
ER20
HARDY
ECMA C10604ES
200
103.50
373.50
49
715.50
JT6
Ø60
M20 x1
53
105
JT6

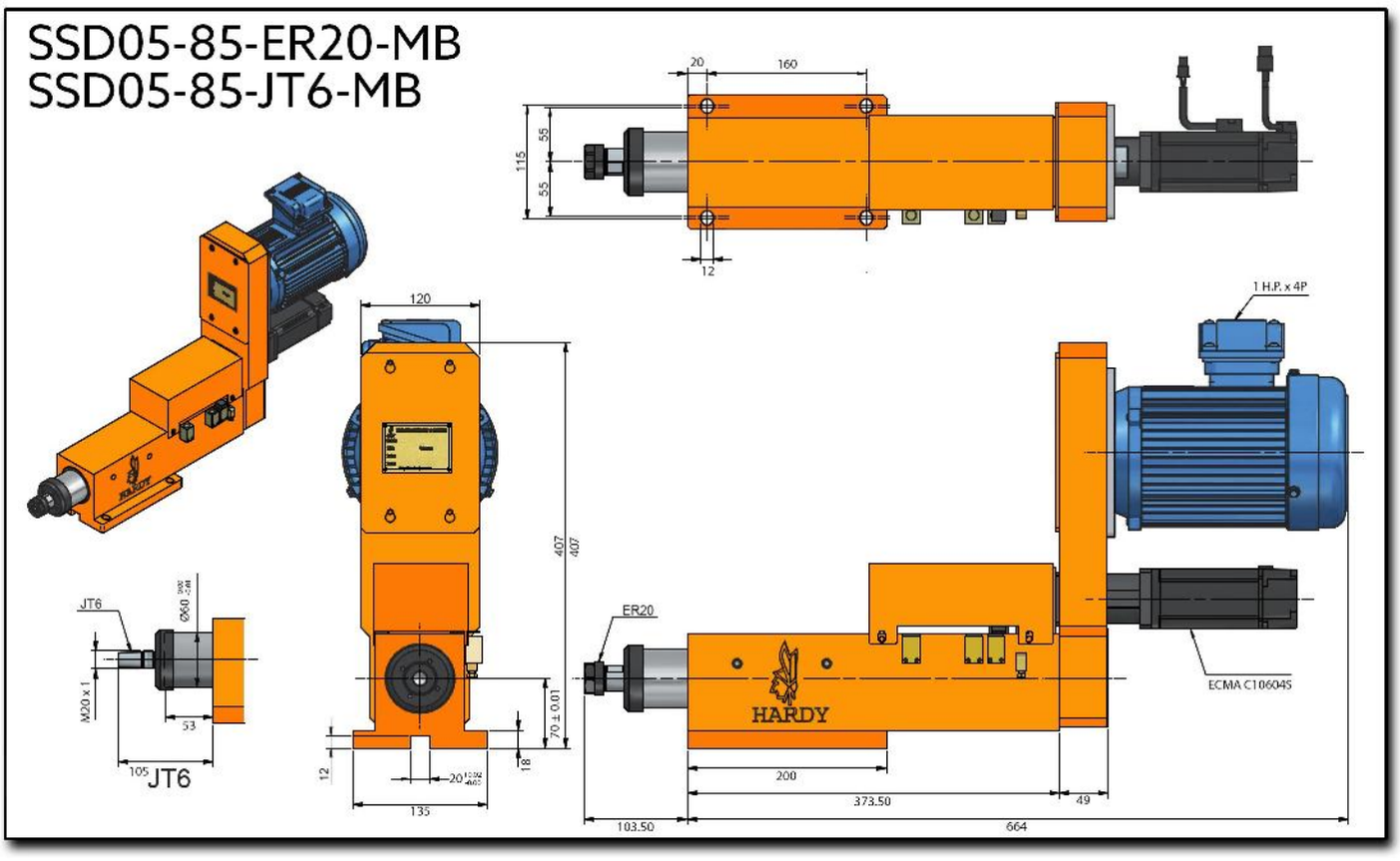
SSD05-85-ER20-MB
SSD05-85-JT6-MB
20
160
115
55
55
12
120
1 H.P. x 4P
407
407
JT6
M20 x 1
53
105
JT6
12
135
70 ± 0.01
18
ER20
HARDY
ECMA C106045
200
373.50
49
103.50
664

SSD06-100

Drilling & Tapping Servo Spindle Head

Patent No. M446677

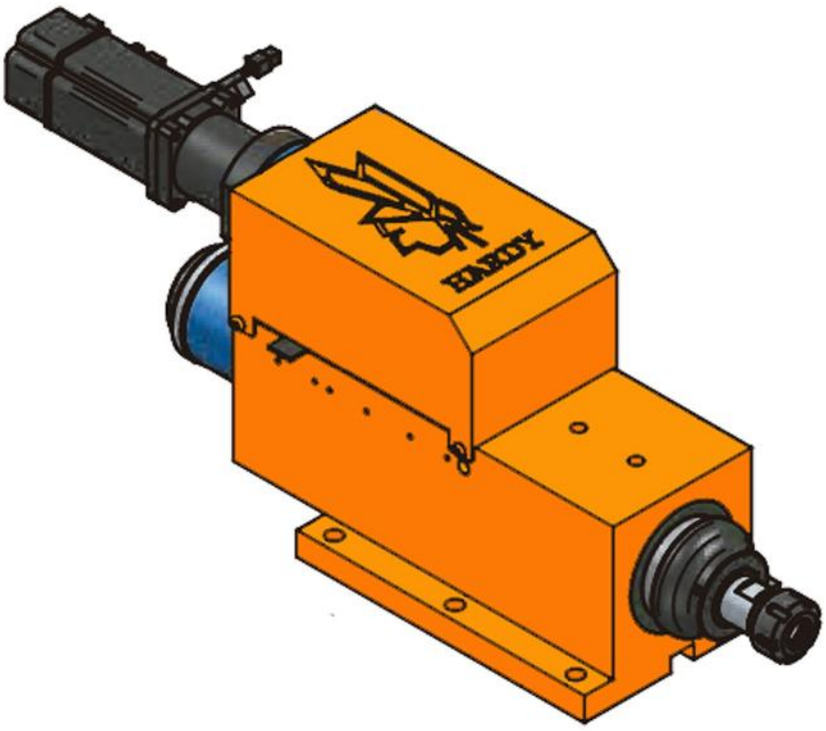

Characteristics & Dimensions

MODEL	SSD06-100
Drilling Capacity (S45C)	*Ø16*
Maximum Stroke	*100 mm.*
Maximum Speed (r.p.m.)	*3,500*
Maximum Power (3 Phases)	*1 Hp x 2P*
Spindle Pulley	*5M-50T, Ø78.50 x J x 15*
Spindle Bearings	*7006 x 2* *7005 x 2*
Pulley Bearings	*6908ZZ x 2*
Ball Screw Block Bearings	*7203 x 2*
Ball Screw Block Seals	*TC24-38-8 x 1 | TC24-40-8 x 1*
Front Cover Seal	*TC70-90-12 x 1*
Piston Seal	*TC45-60-7 x 1*
Ball Screw	*Ø20 x 5 x C5*

**** Roundness ≤ 0.003 mm.*
***** All dimensions are given in millimeters.*

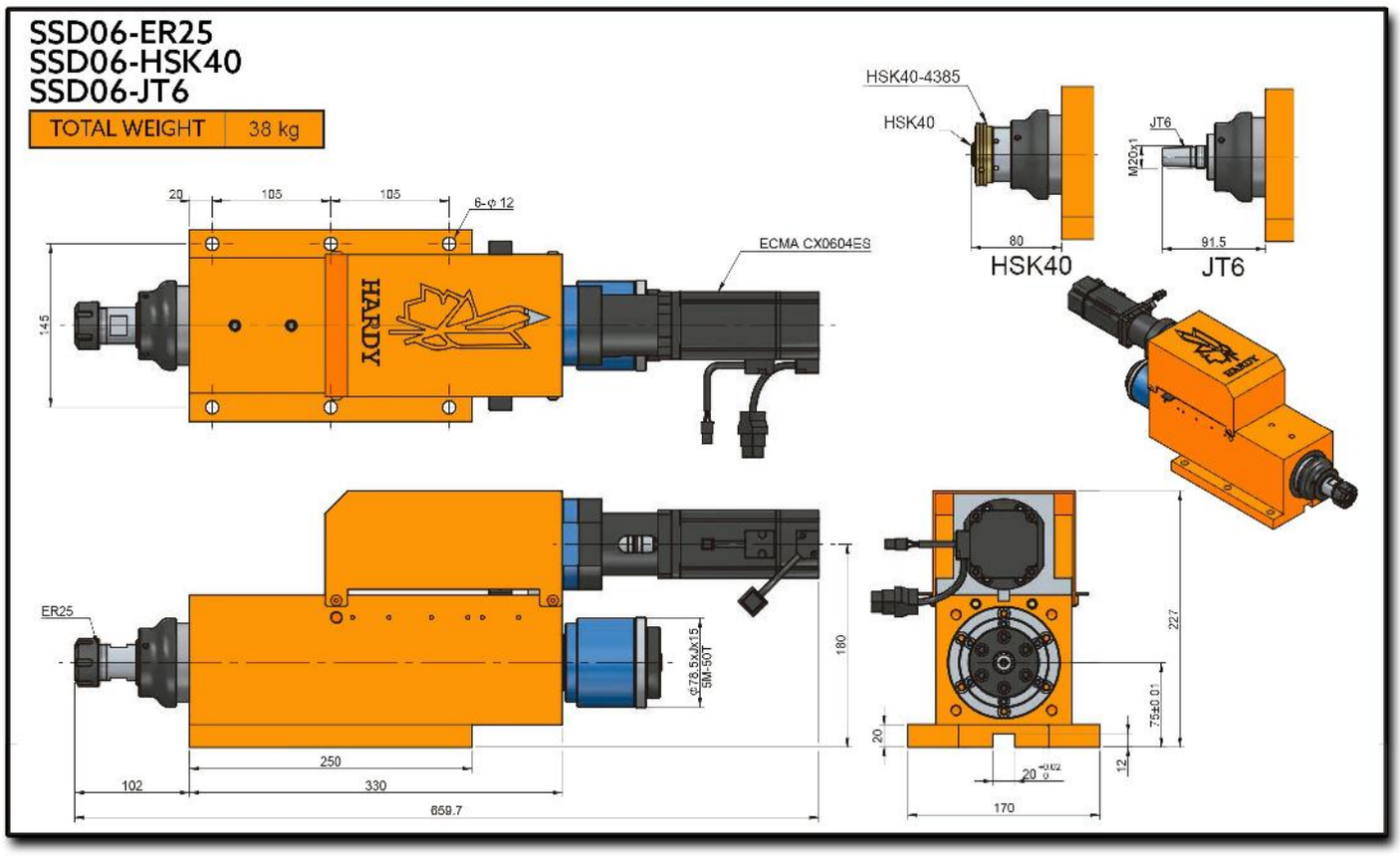
SSD06-ER25
SSD06-HSK40
SSD06-JT6
TOTAL WEIGHT 38 kg
HSK40-4385
HSK40
JT6
M20x1
80
91.5
HSK40
JT6
20
105
105
6-φ12
ECMA CX0604ES
145
HARDY
ER25
Ø78.5xM15
5M-50T
180
250
102
330
659.7
227
75±0.01
20
12
170

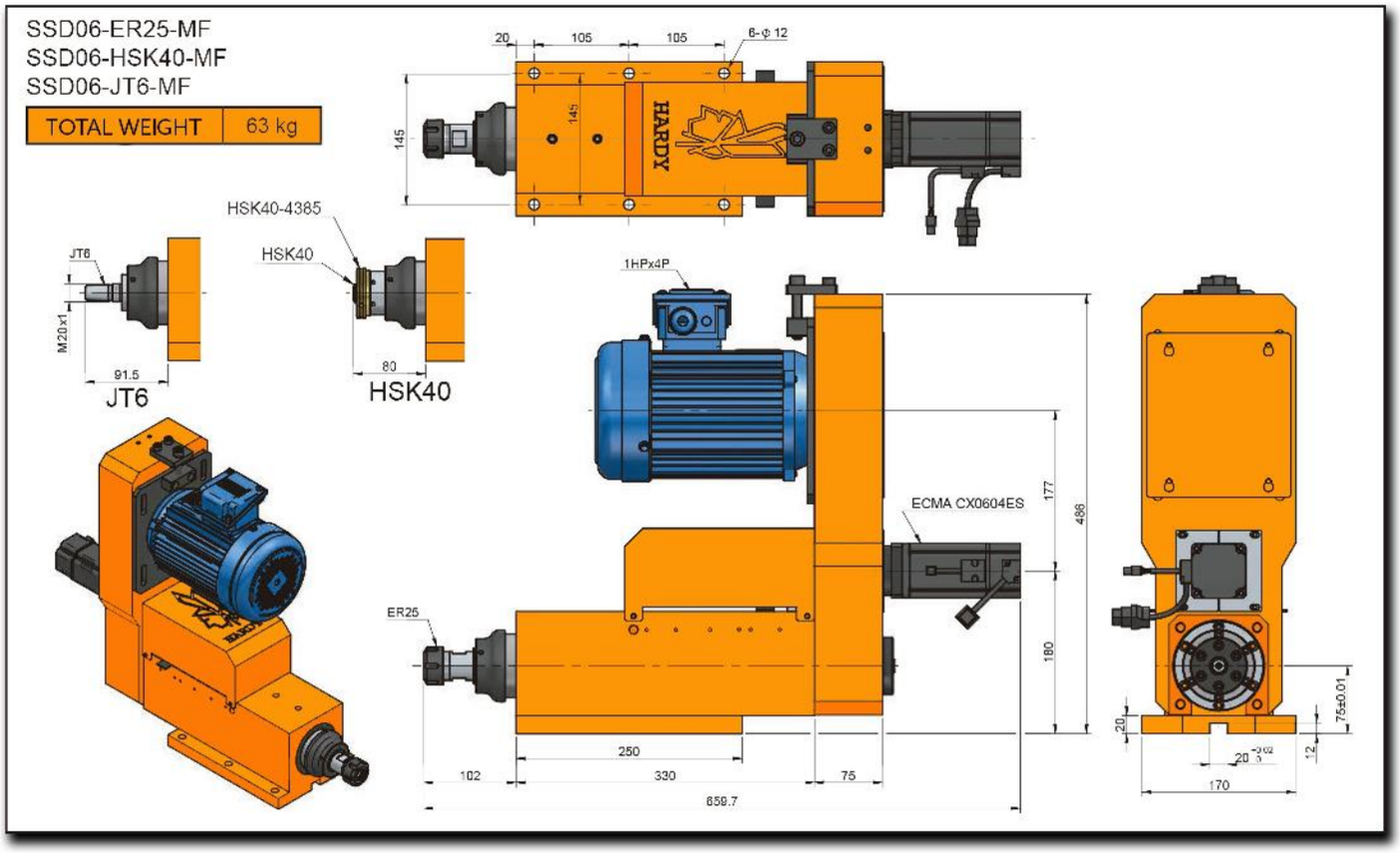
SSD06-ER25-MF
SSD06-HSK40-MF
SSD06-JT6-MF
TOTAL WEIGHT
63 kg
HARDY
HSK40-4385
JT6
HSK40
M20x1
91.5
80
1HPx4P
ECMA CX0604ES
ER25
177
486
180
250
102
330
75
659.7
20
170
12
75±0.01

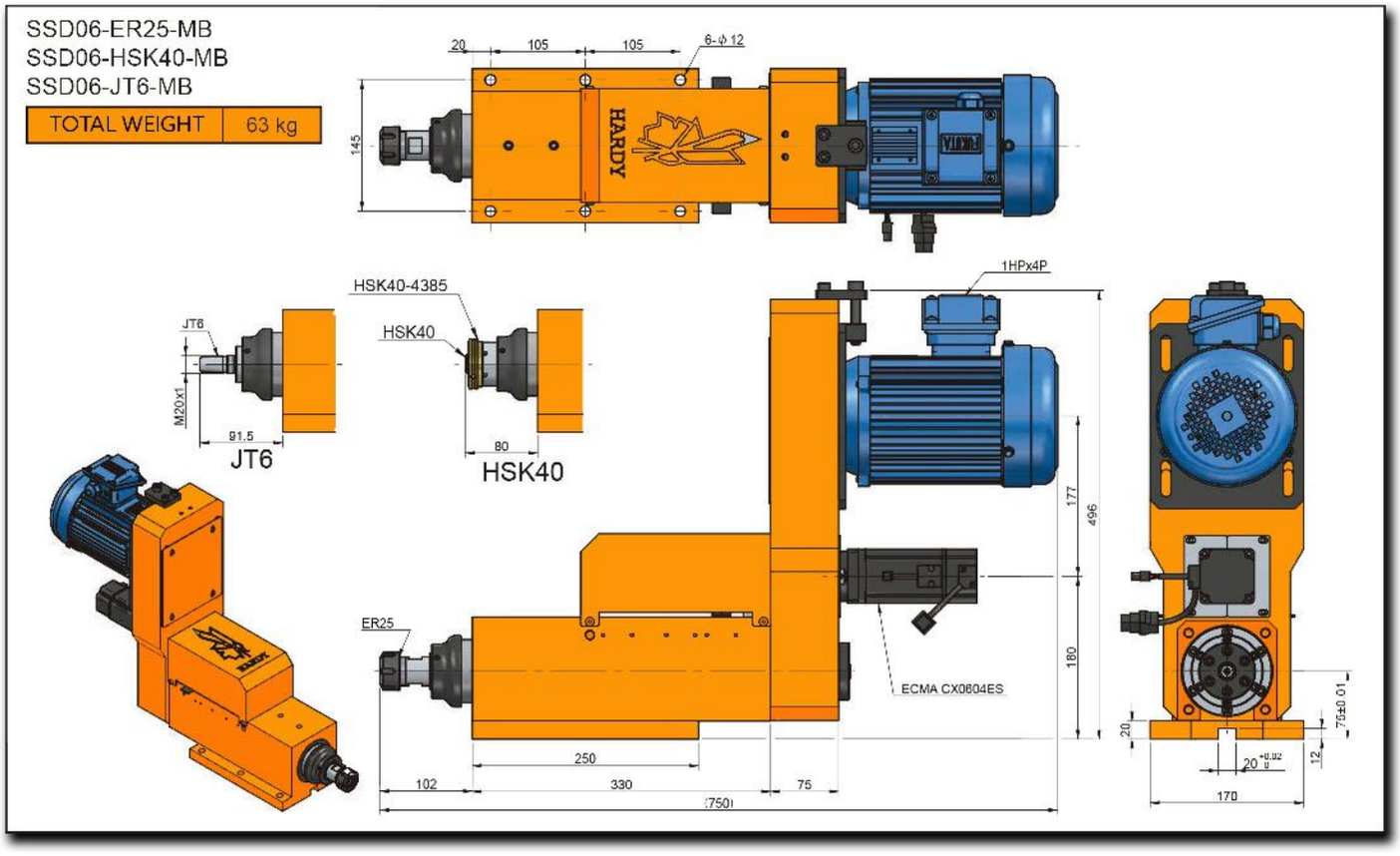
SSD06-ER25-MB
SSD06-HSK40-MB
SSD06-JT6-MB
TOTAL WEIGHT
63 kg
20
105
105
6-ϕ 12
145
HARDY
HSK40-4385
HSK40
JT6
M20x1
91.5
JT6
80
HSK40
1HPx4P
177
496
180
ER25
ECMA CX0604ES
250
102
330
75
750
20
12
170

SSD06H-100

High Performance Drilling & Tapping Servo Spindle Head

Patent No. M446677

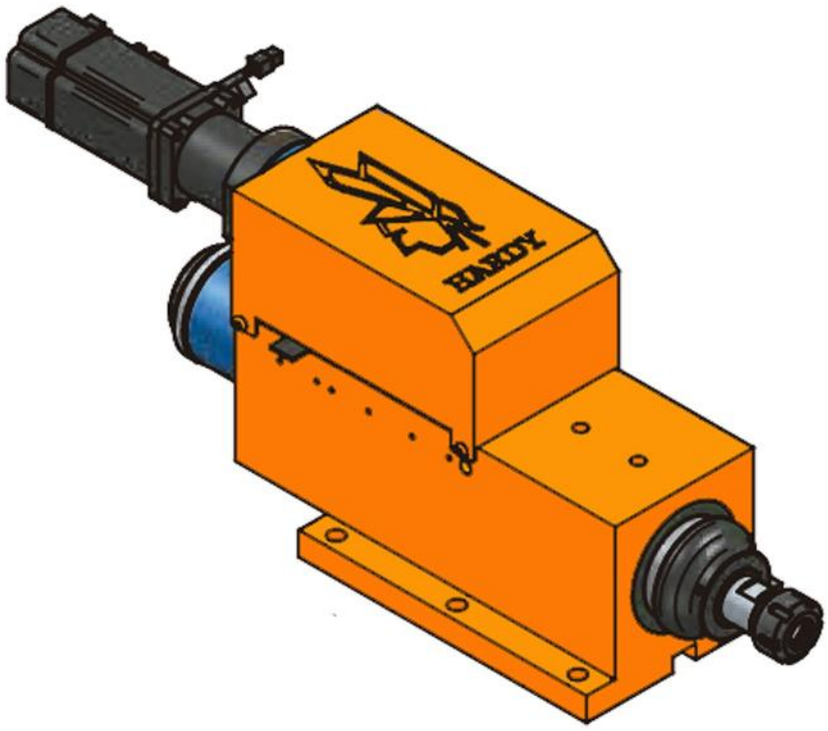

Characteristics & Dimensions

MODEL	SSD06H-100
Drilling Capacity (S45C)	*Ø16*
Maximum Stroke	*100 mm.*
Maximum Speed (r.p.m.)	*10,000*
Maximum Power (3 Phases)	*1 Hp x 2P*
Spindle Pulley	*5M-50T, Ø78.50 x J x 15*
Spindle Bearings	*7006 x 2* *7005 x 2*
Pulley Bearings	*6908ZZ x 2*
Ball Screw Block Bearings	*7203 x 2*
Ball Screw Block Seals	*TC24-38-8 x 1 | TC24-40-8 x 1*
Front Cover Seal	*TC70-90-12 x 1*
Piston Seal	*G40 x 1 | G48 (HSK40)*
Ball Screw	*TC45-60-7 x 1*

*** Roundness ≤ 0.003 mm.*
**** All dimensions are given in millimeters.*

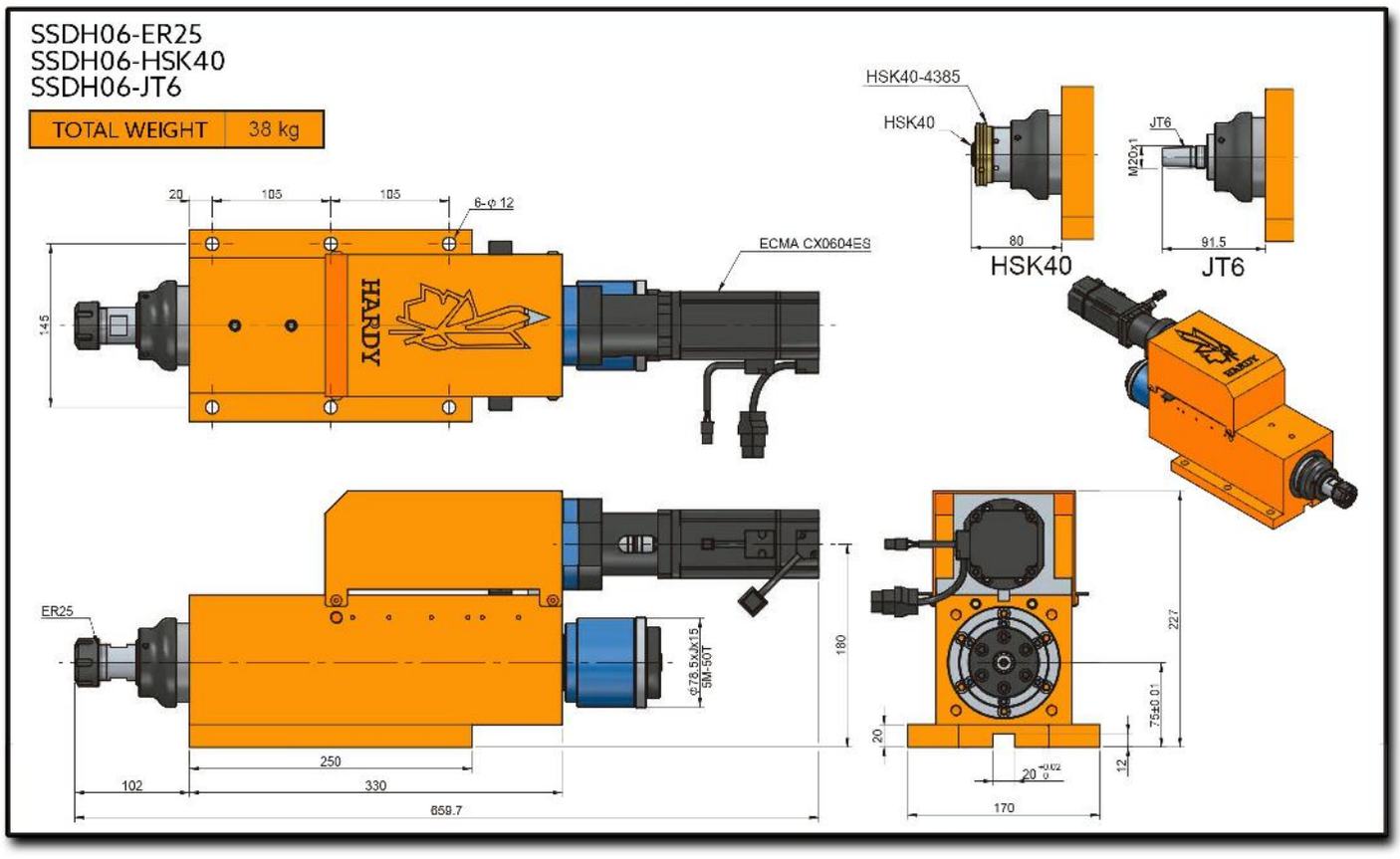
SSDH06-ER25
SSDH06-HSK40
SSDH06-JT6
TOTAL WEIGHT 38 kg
HSK40-4385
HSK40
JT6
M20x1
80
91.5
HSK40
JT6
20
105
105
6-φ12
ECMA CX0604ES
HARDY
145
ER25
Ø78.5xM15
5M-50T
180
250
102
330
659.7
227
75±0.01
20
12
170

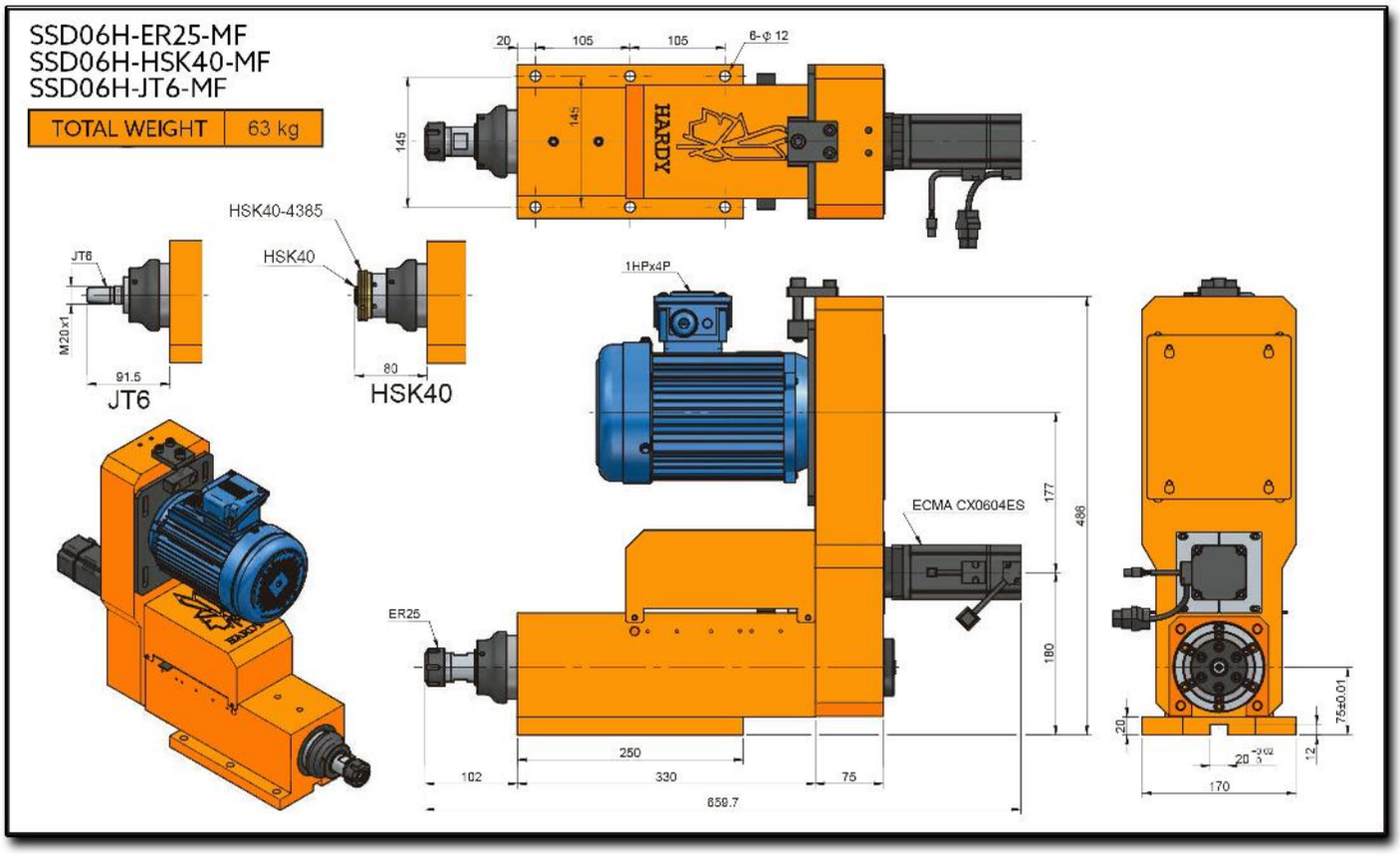
SSD06H-ER25-MF
SSD06H-HSK40-MF
SSD06H-JT6-MF
TOTAL WEIGHT
63 kg
HSK40-4385
HSK40
JT6
M20x1
91.5
80
HSK40
1HPx4P
ECMA CX0604ES
ER25
20
105
105
6-φ 12
145
145
HARDY
177
486
180
250
102
330
75
659.7
20
20
12
170
75±0.01

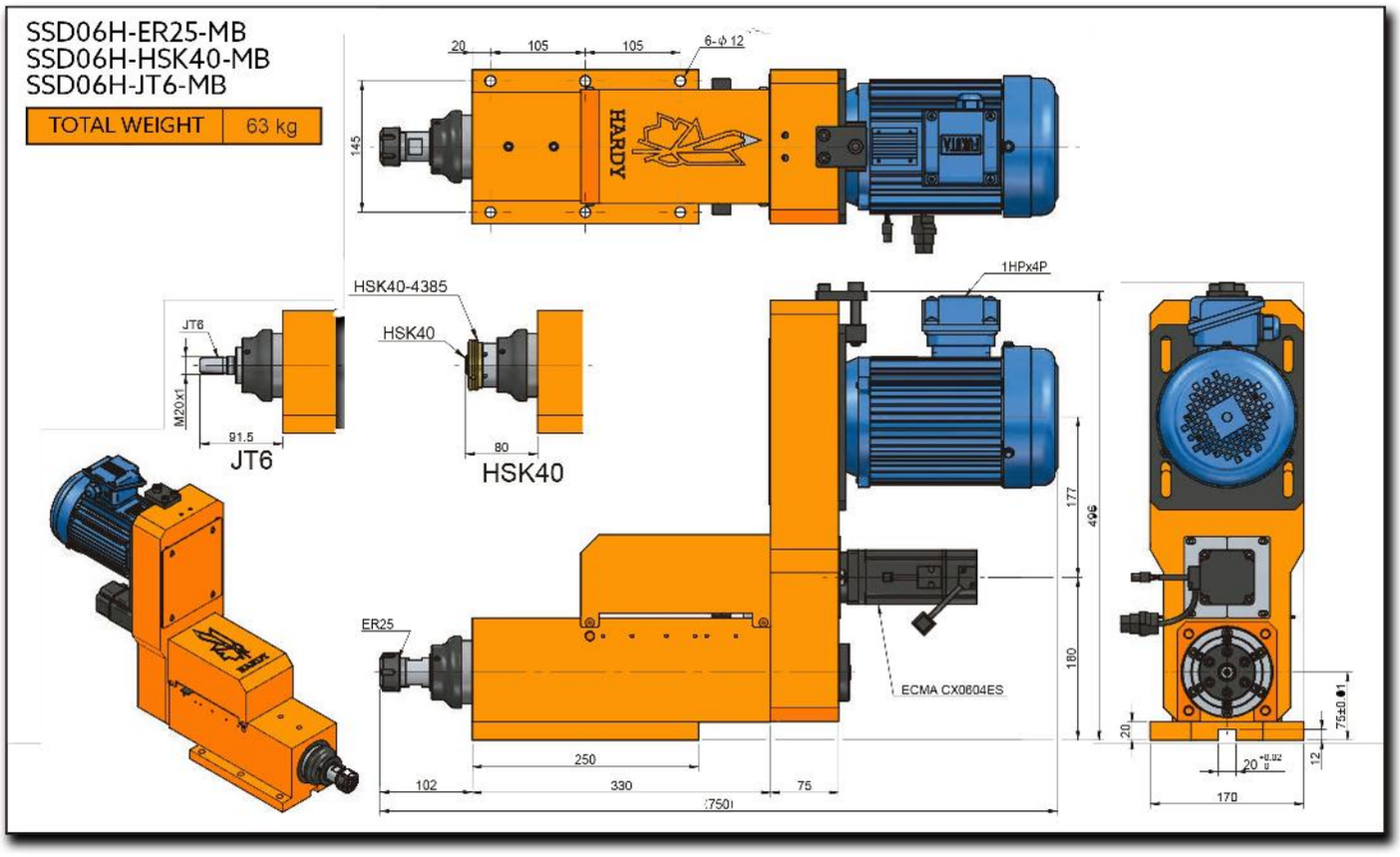
SSD06H-ER25-MB
SSD06H-HSK40-MB
SSD06H-JT6-MB
TOTAL WEIGHT
63 kg
20
105
105
6-ϕ 12
145
HARDY
HSK40-4385
HSK40
JT6
M20x1
91.5
JT6
80
HSK40
1HPx4P
ER25
ECMA CX0604ES
177
406
180
20
75±0.1
12
20 +0.02 0
170
250
102
330
75
750

SSD09-120

Drilling & Tapping Servo Spindle Head

Patent No. M446677

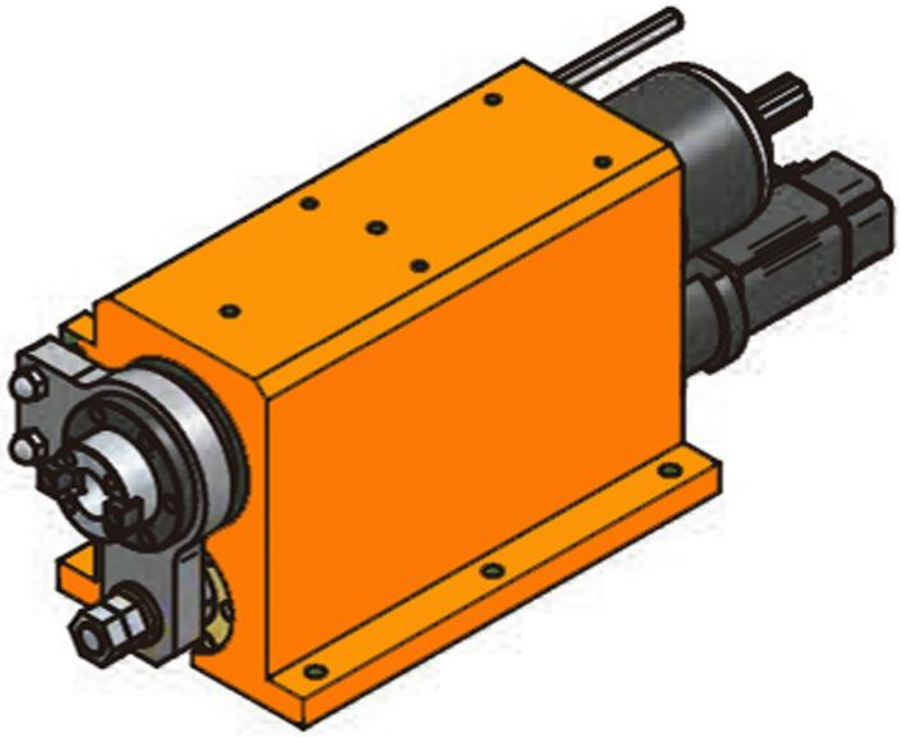

Characteristics & Dimensions

MODEL	SSD09
Drilling Capacity (S45C)	*Ø25*
Maximum Stroke	*120 mm.*
Maximum Speed (r.p.m.)	*3,000*
Maximum Power (3 Phases)	*2 Hp x 4P*
Spindle Pulley	*5M-66T, Ø102.30 x J x 20*
Spindle Bearings	*6007Z x 1 | 6006Z x 1* *32007Z x 1 | 32006 x 1*
Pulley Bearings	*6010ZZ x 2*
Ball Screw Block Bearings	*7203 x 2*
Ball Screw Block Seals	*TC24-38-8 x 1 | TC24-40-8 x 1*
Front Cover Seal	*TC90-110-12 x 1*
Piston Seal	*TC50-65-8 x 1*
Ball Screw	*Ø20 x 5 x C5*

*** Roundness ≤ 0.003 mm.*
**** All dimensions are given in millimeters.*

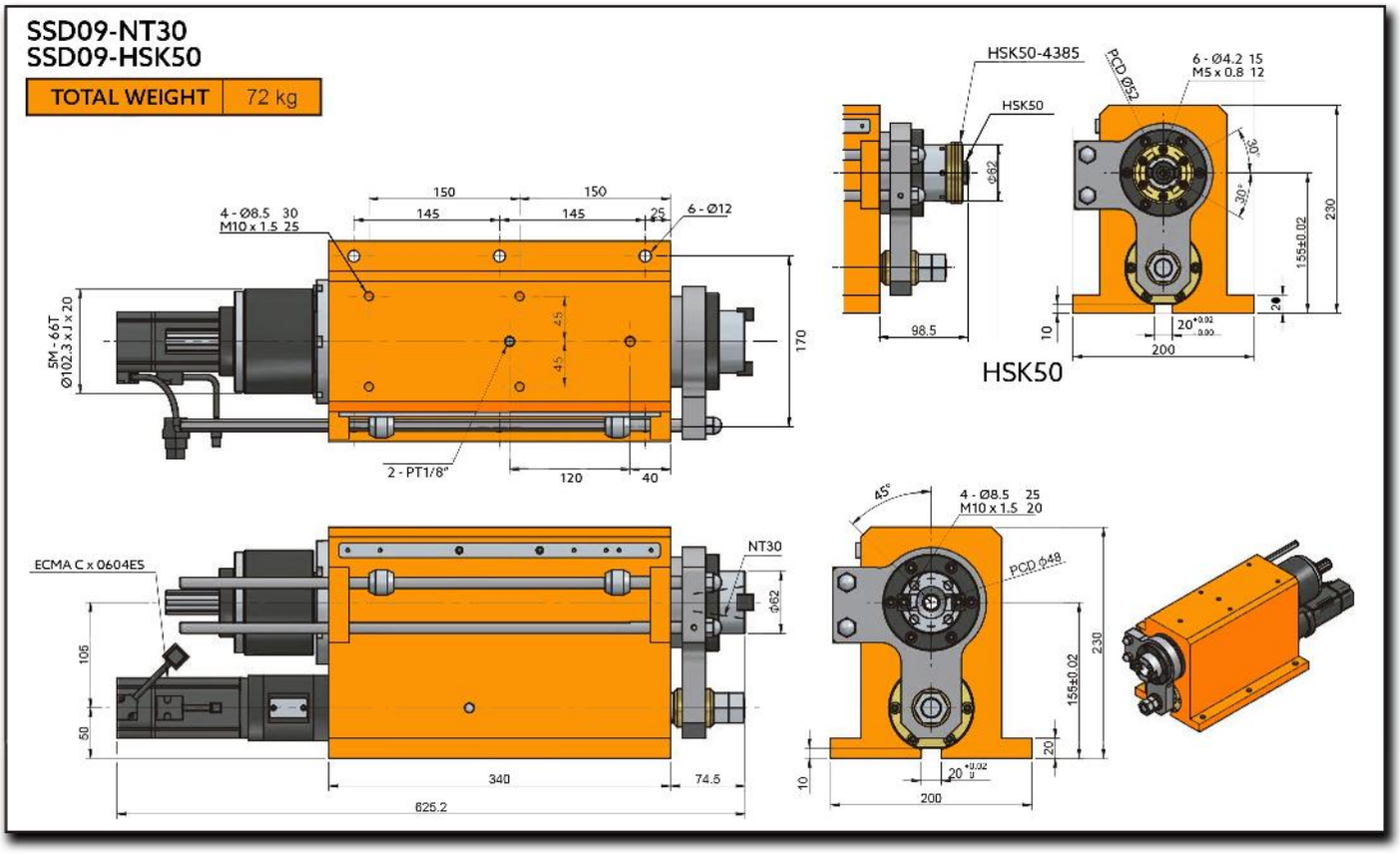
SSD09-NT30
SSD09-HSK50
TOTAL WEIGHT 72 kg
HSK50-4385
HSK50
PCD Ø52
6 - Ø4.2 15
M5 x 0.8 12
4 - Ø8.5 30
M10 x 1.5 25
6 - Ø12
150
150
145
145
25
5M - 66T
Ø102.3 x J x 20
170
2 - PT1/8"
120
40
98.5
10
200
155±0.02
230
HSK50
ECMA C x 0604ES
NT30
Ø62
105
50
340
74.5
625.2
45°
4 - Ø8.5 25
M10 x 1.5 20
PCD Ø48
155±0.02
230
20
10
200

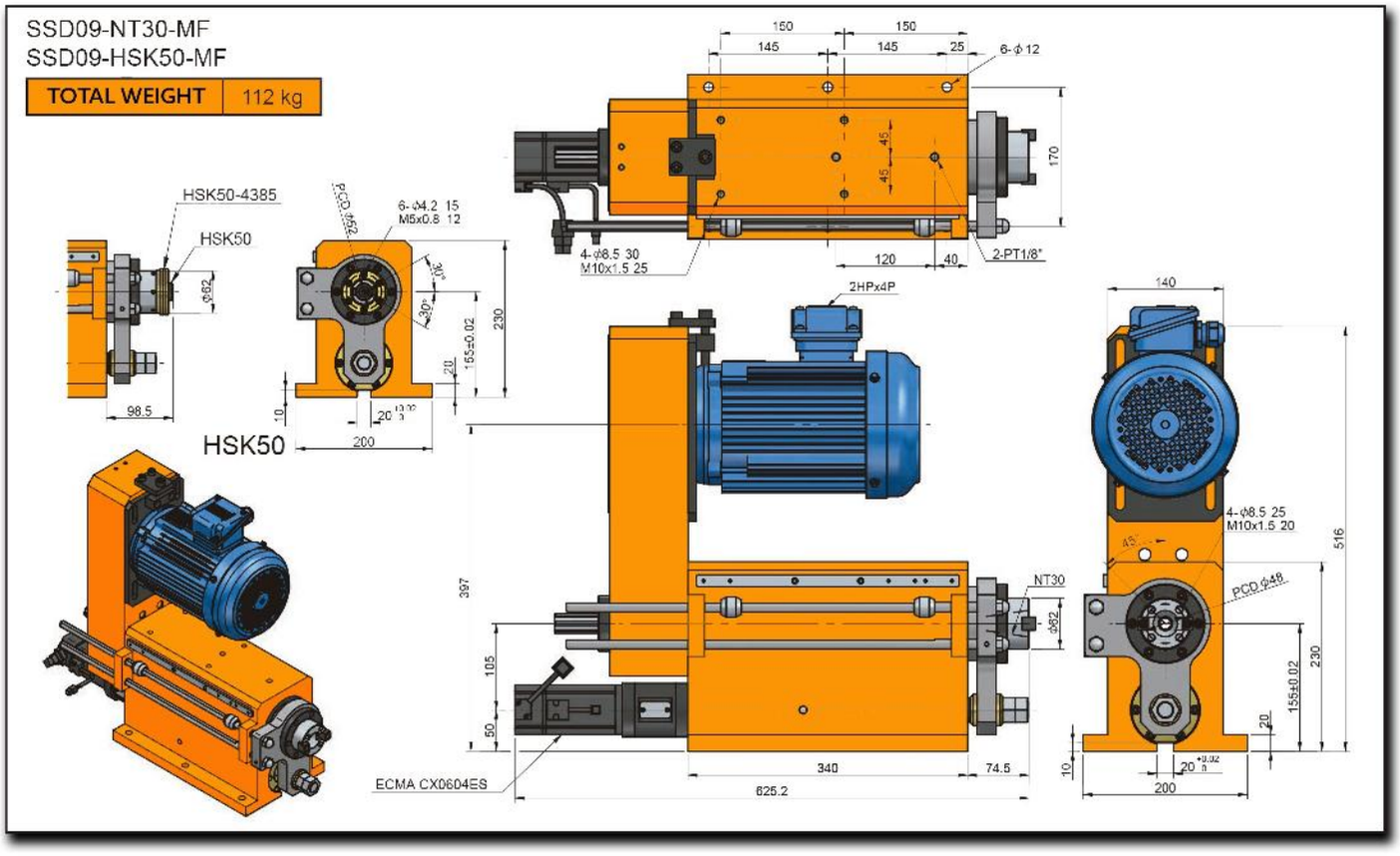
SSD09-NT30-MF
SSD09-HSK50-MF
TOTAL WEIGHT
112 kg
HSK50-4385
HSK50
HSK50
6-φ4.2 15
M5x0.8 12
4-φ8.5 30
M10x1.5 25
2-PT1/8"
6-φ12
2HPx4P
NT30
4-φ8.5 25
M10x1.5 20
PCD φ48
ECMA CX0604ES
150
145
25
170
120
40
140
98.5
200
230
155±0.02
397
105
50
340
74.5
625.2
516

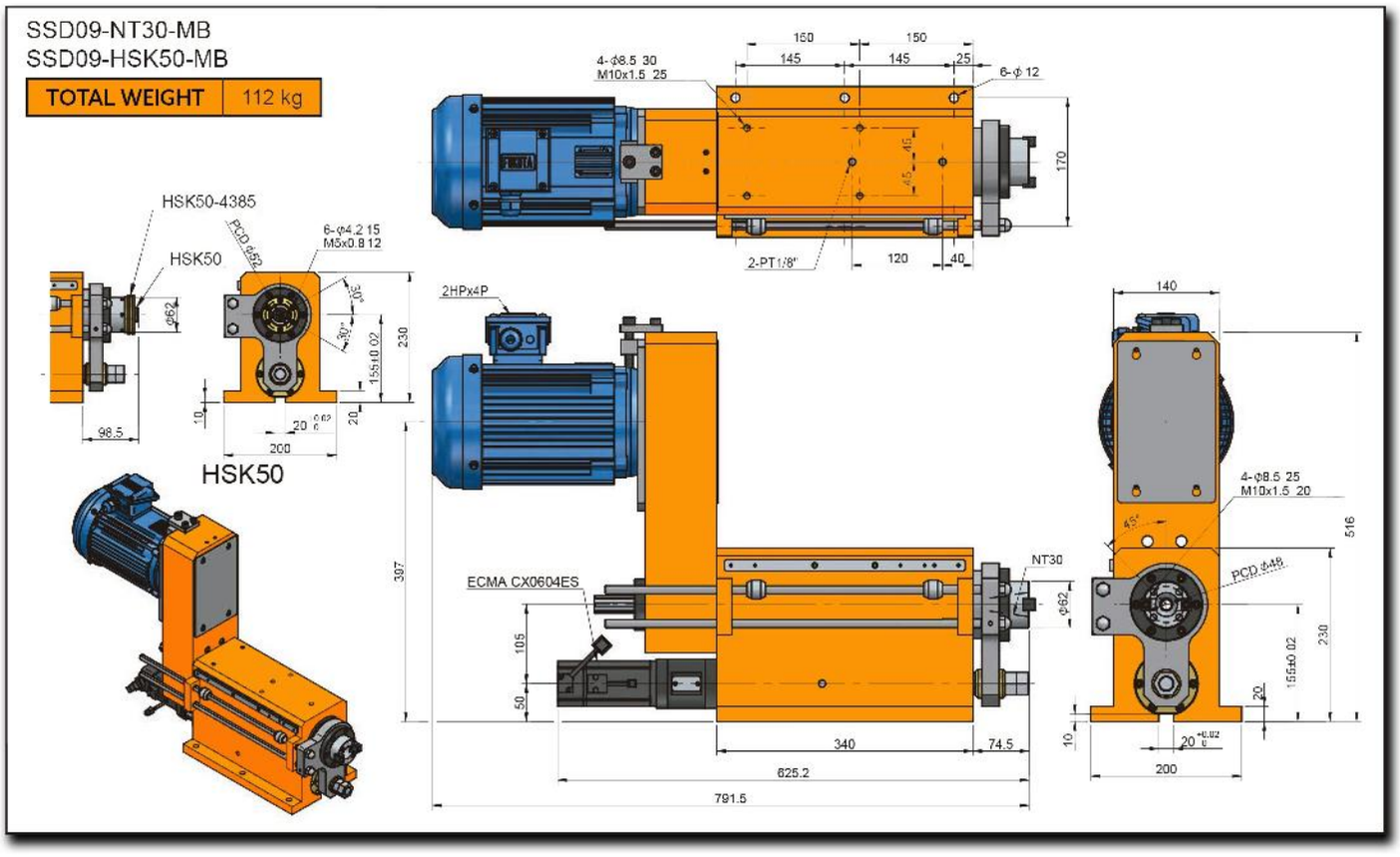
SSD09-NT30-MB
SSD09-HSK50-MB
TOTAL WEIGHT
112 kg
HSK50-4385
HSK50
6-φ4.2 15
M5x0.8 12
PCD 52
HSK50
2HPx4P
ECMA CX0604ES
NT30
4-φ8.5 30
M10x1.5 25
6-φ 12
2-PT1/8"
4-φ8.5 25
M10x1.5 20
PCD φ48
150
150
145
145
25
170
120
40
140
516
230
340
74.5
625.2
791.5
200
397

SSD09H-120

High Performance Drilling & Tapping Servo Spindle Head

Patent No. M446677

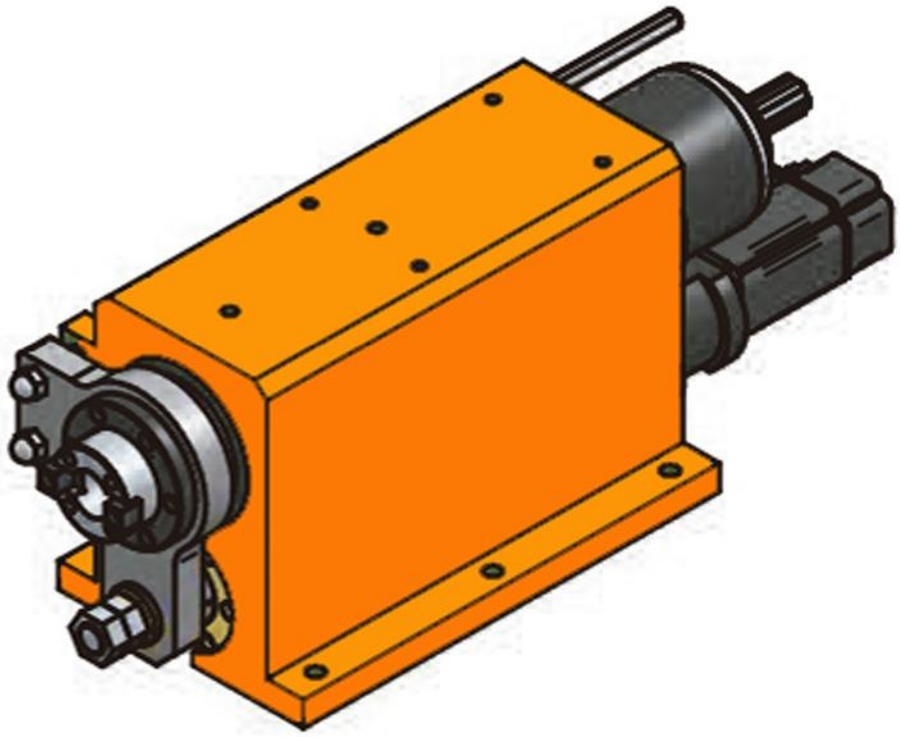

Characteristics & Dimensions

MODEL	SSD09H
Drilling Capacity (S45C)	*Ø25*
Maximum Stroke	*120 mm.*
Maximum Speed (r.p.m.)	*8,000*
Maximum Power (3 Phases)	*2 Hp x 4P*
Spindle Pulley	*5M-66T, Ø102.30 x J x 20*
Spindle Bearings	*7007 x 2* *7006 x 2*
Pulley Bearings	*6010ZZ x 2*
Ball Screw Block Bearings	*7203 x 2*
Ball Screw Block Seals	*TC24-38-8 x 1 | TC24-40-8 x 1*
Front Cover Seal	*TC90-110-12 x 1*
Piston Seal	*TC50-65-8 x 1*
Ball Screw	*Ø20 x 5 x C5*

*** Roundness ≤ 0.003 mm.*
**** All dimensions are given in millimeters.*

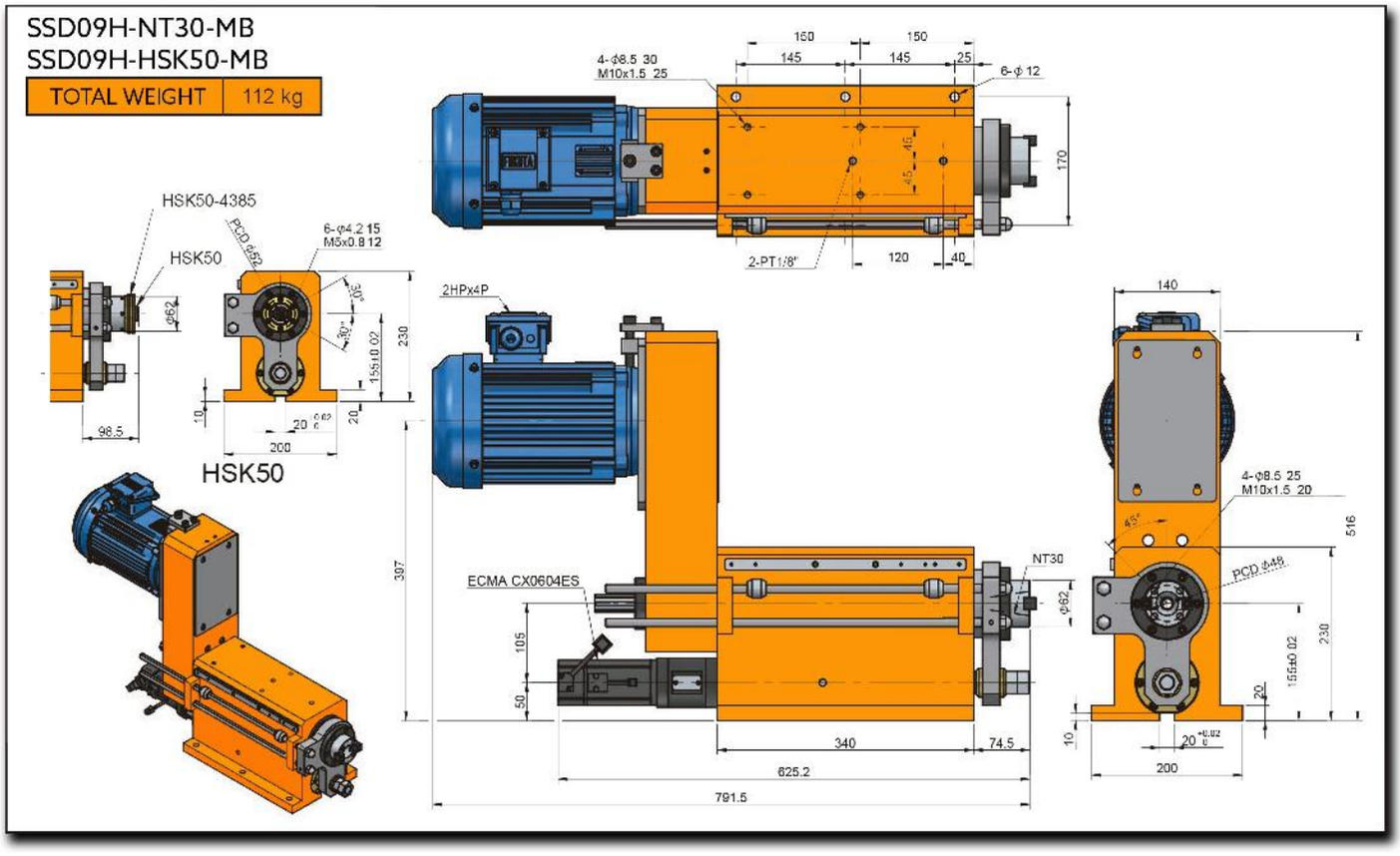
SSD09H-NT30-MB
SSD09H-HSK50-MB
TOTAL WEIGHT 112 kg
HSK50-4385
HSK50
6-φ4.2 15
M5x0.8 12
PCD φ52
HSK50
4-φ8.5 30
M10x1.5 25
6-φ 12
2-PT1/8"
2HPx4P
ECMA CX0604ES
NT30
4-φ8.5 25
M10x1.5 20
PCD φ48
150
145
25
170
120
40
140
230
98.5
200
397
105
50
340
74.5
625.2
791.5
516

SSD09H-NT30
SSD09H-HSK50

TOTAL WEIGHT	72 kg

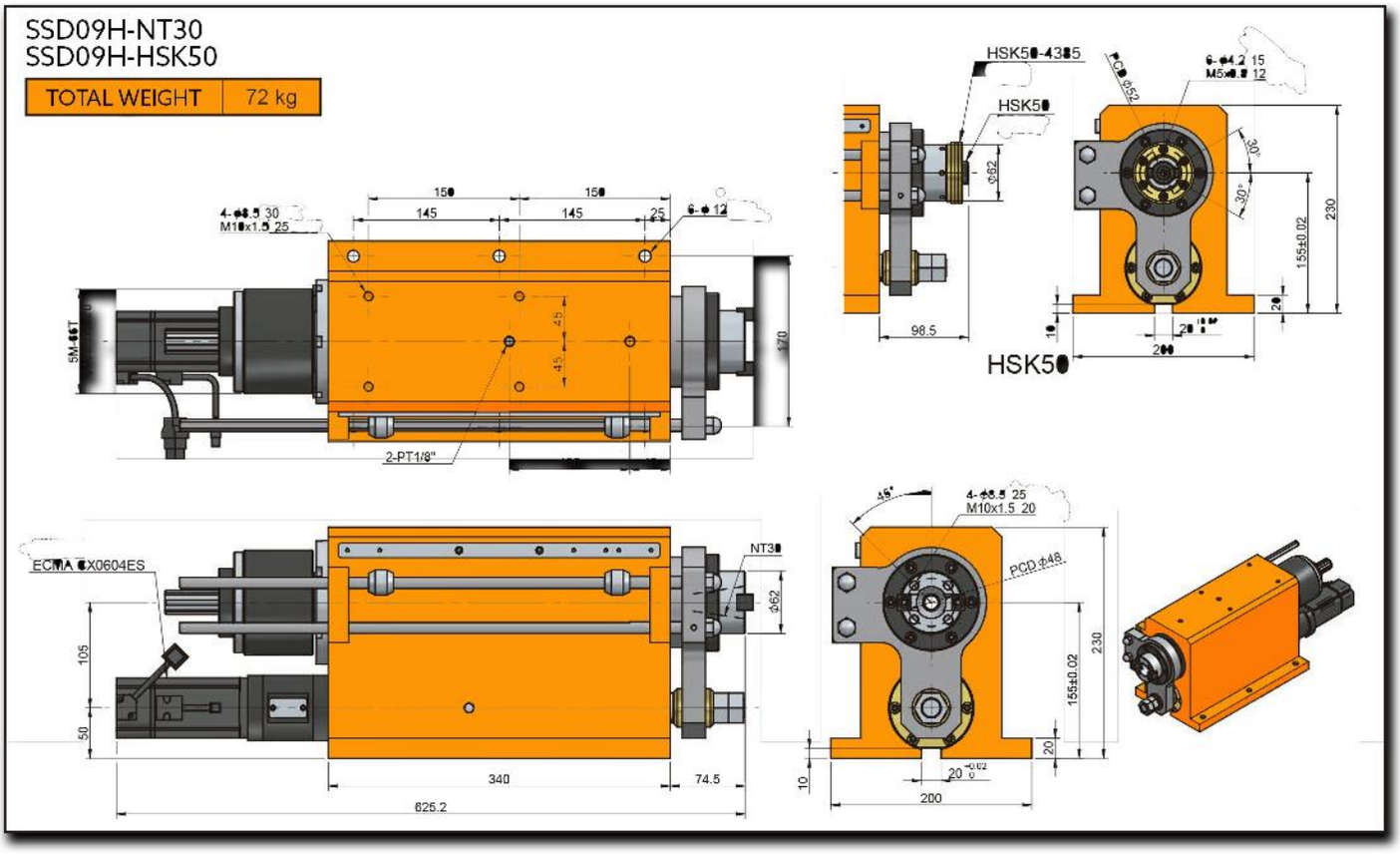

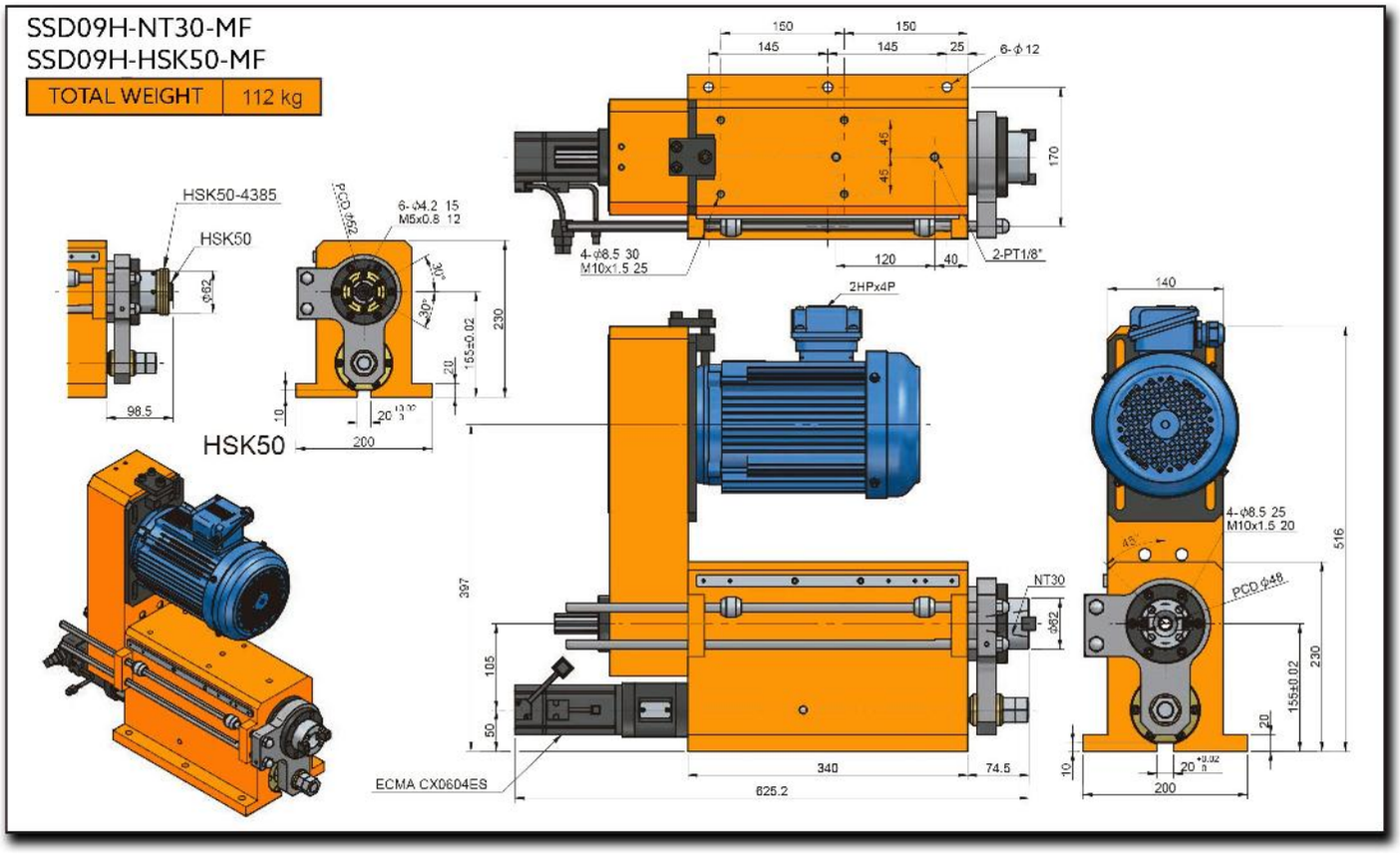
SSD09H-NT30-MF
SSD09H-HSK50-MF
TOTAL WEIGHT
112 kg
HSK50-4385
HSK50
HSK50
6-Φ4.2 15
M5x0.8 12
4-Φ8.5 30
M10x1.5 25
2-PT1/8"
6-Φ12
2HPx4P
NT30
4-Φ8.5 25
M10x1.5 20
PCD Φ48
ECMA CX0604ES
150
145
25
170
120
40
230
155±0.02
98.5
200
397
105
50
340
74.5
625.2
140
516

SSD12-150

Drilling & Tapping Servo Spindle Head

Patent No. M446677

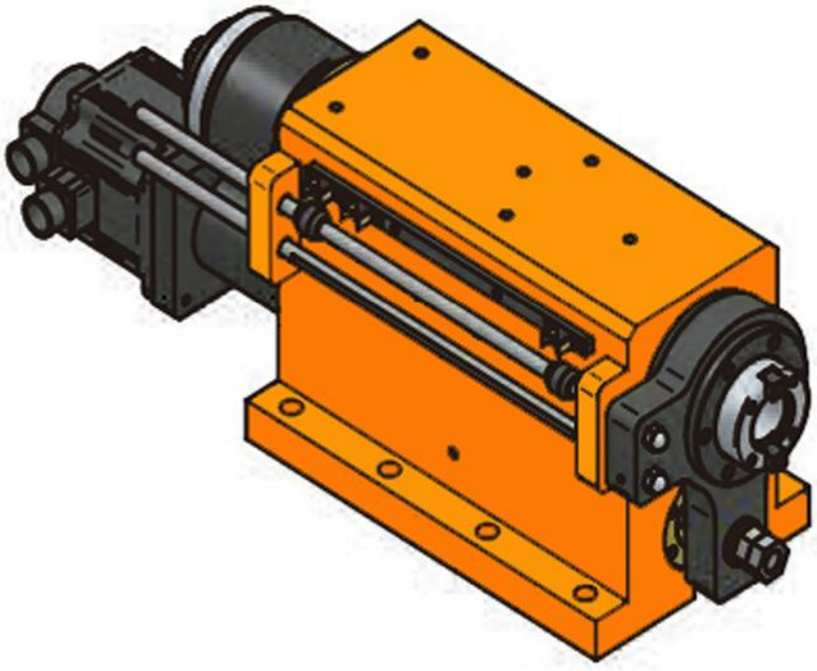

Characteristics & Dimensions

MODEL	SSD12-150
Drilling Capacity (S45C)	Ø35
Maximum Stroke	150 mm.
Maximum Speed (r.p.m.)	2,000
Maximum Power (3 Phases)	3 Hp x 4P
Spindle Pulley	8M-54T, Ø133.60 x J x 25
Spindle Bearings	6011Z x 1 | 6009Z x 1 32011 x 1 | 32009 x 1
Pulley Bearings	3211ZZ x 2
Ball Screw Block Bearings	7204 x 2
Ball Screw Block Seals	TC26-42-8 x 2
Front Cover Seal	TC120-145-12 x 1
Piston Seal	TC75-90-12 x 1
Ball Screw	Ø25 x 5 x C5

** Roundness ≤ 0.003 mm.
*** All dimensions are given in millimeters.

SSD12-NT40
SSD12-HSK63

Peso Total	136 kg

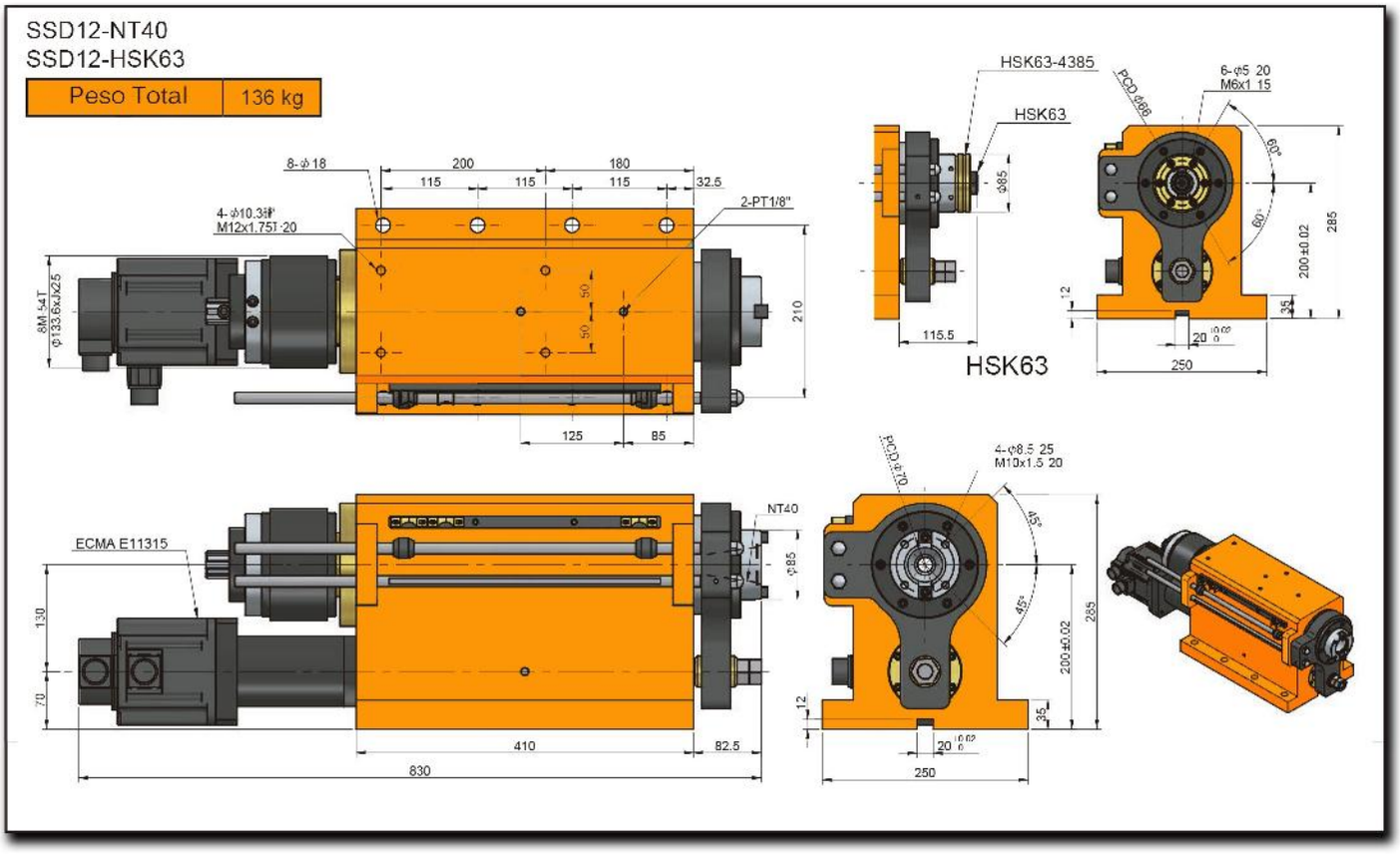

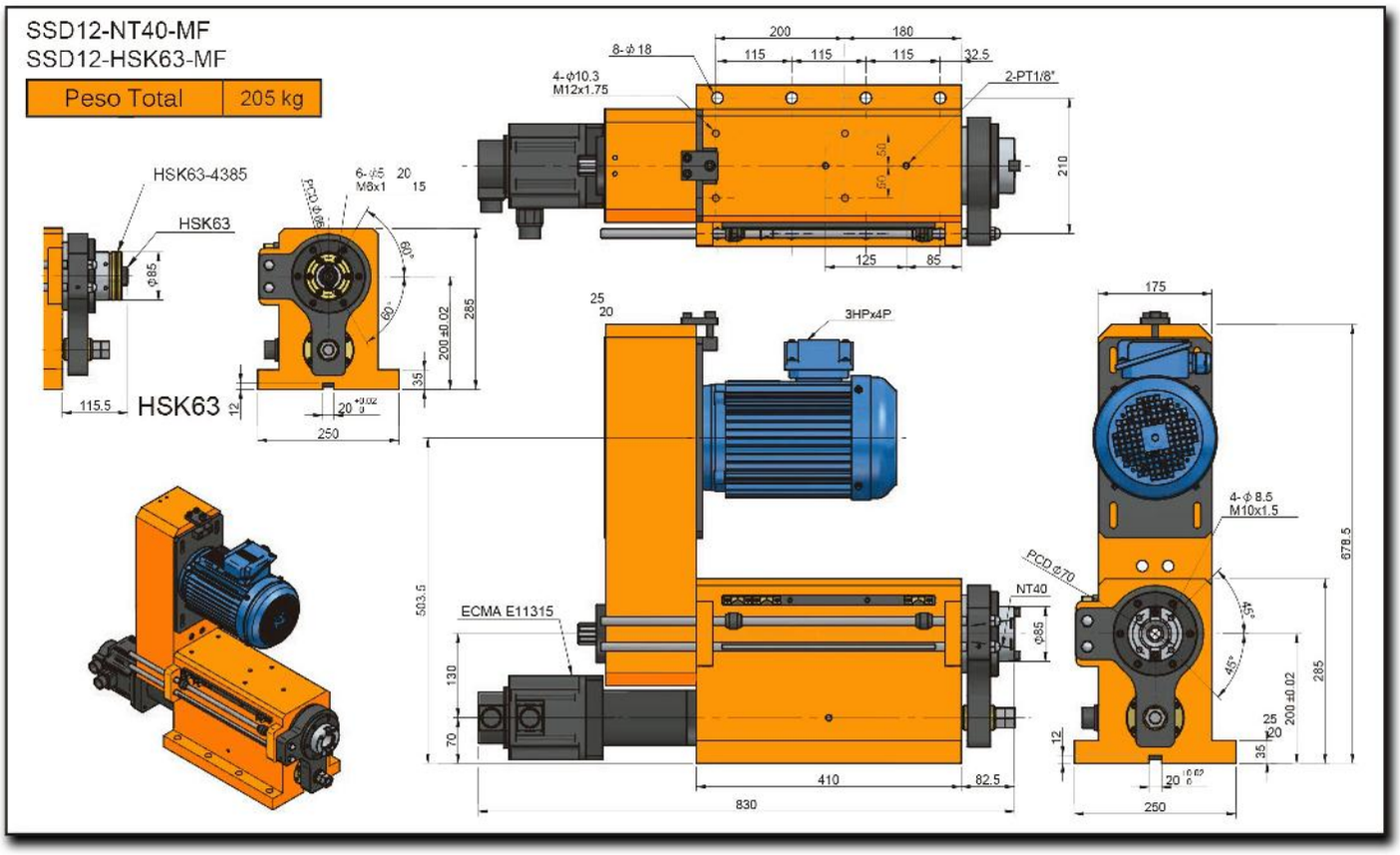
SSD12-NT40-MF
SSD12-HSK63-MF
Peso Total
205 kg
HSK63-4385
HSK63
HSK63
8-ϕ18
4-ϕ10.3
M12x1.75
2-PT1/8"
3HPx4P
ECMA E11315
NT40
PCD ϕ70
4-ϕ8.5
M10x1.5
200
180
115
115
115
32.5
210
125
85
175
678.5
285
200±0.02
503.5
130
70
410
82.5
830
250
115.5
12
35
ϕ85
60°
45°

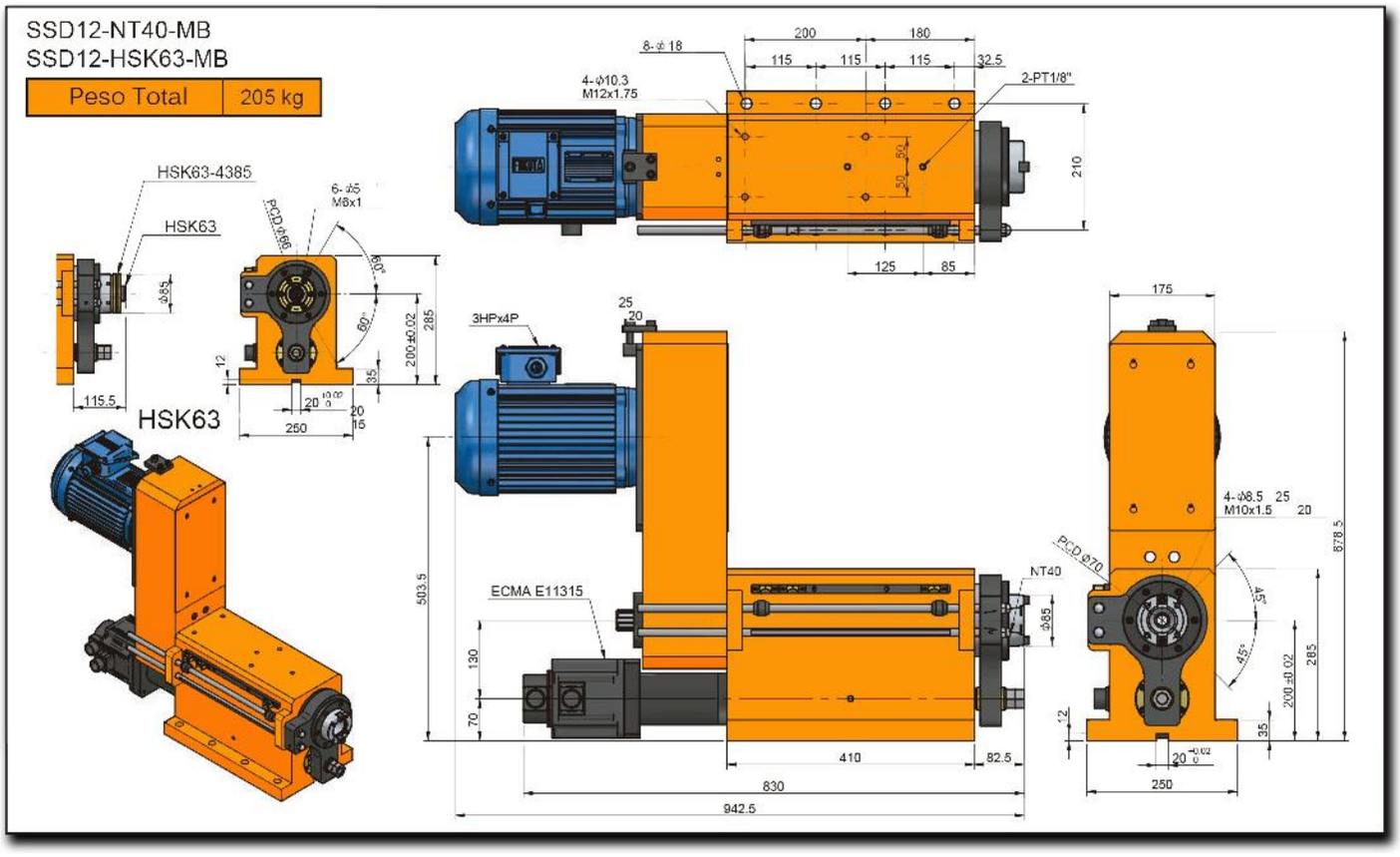
SSD12-NT40-MB
SSD12-HSK63-MB
Peso Total
205 kg
HSK63-4385
HSK63
HSK63
8-ϕ18
4-ϕ10.3
M12x1.75
2-PT1/8"
3HPx4P
ECMA E11315
NT40
PCD ϕ70
4-ϕ8.5
M10x1.5
200
180
115
115
115
32.5
210
125
85
175
503.5
130
70
410
82.5
830
942.5
250
285
200±0.02
678.5
115.5
250

SSD12H-150

High Performance Drilling & Tapping Servo Spindle Head

Patent No. M446677

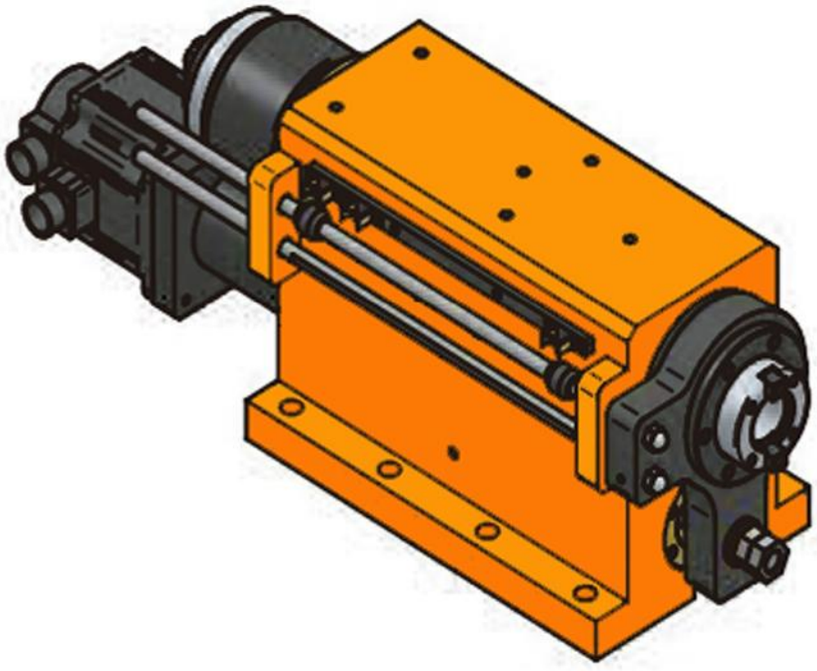

Characteristics & Dimensions

MODEL	SSD12H
Drilling Capacity (S45C)	Ø35
Maximum Stroke	150 mm.
Maximum Speed (r.p.m.)	6,000
Maximum Power (3 Phases)	3 Hp x 4P
Spindle Pulley	8M-54T, Ø133.60 x J x 25
Spindle Bearings	7011 x 2 7009 x 2
Pulley Bearings	3211ZZ x 2
Ball Screw Block Bearings	7204 x 2
Ball Screw Block Seals	TC26-42-8 x 2
Front Cover Seal	TC120-145-12 x 1
Piston Seal	TC75-90-12 x 1
Ball Screw	Ø25 x 5 x C5

** Roundness ≤ 0.003 mm.
*** All dimensions are given in millimeters.

SSD12H-NT40
SSD12H-HSK63

Peso Total	136 kg

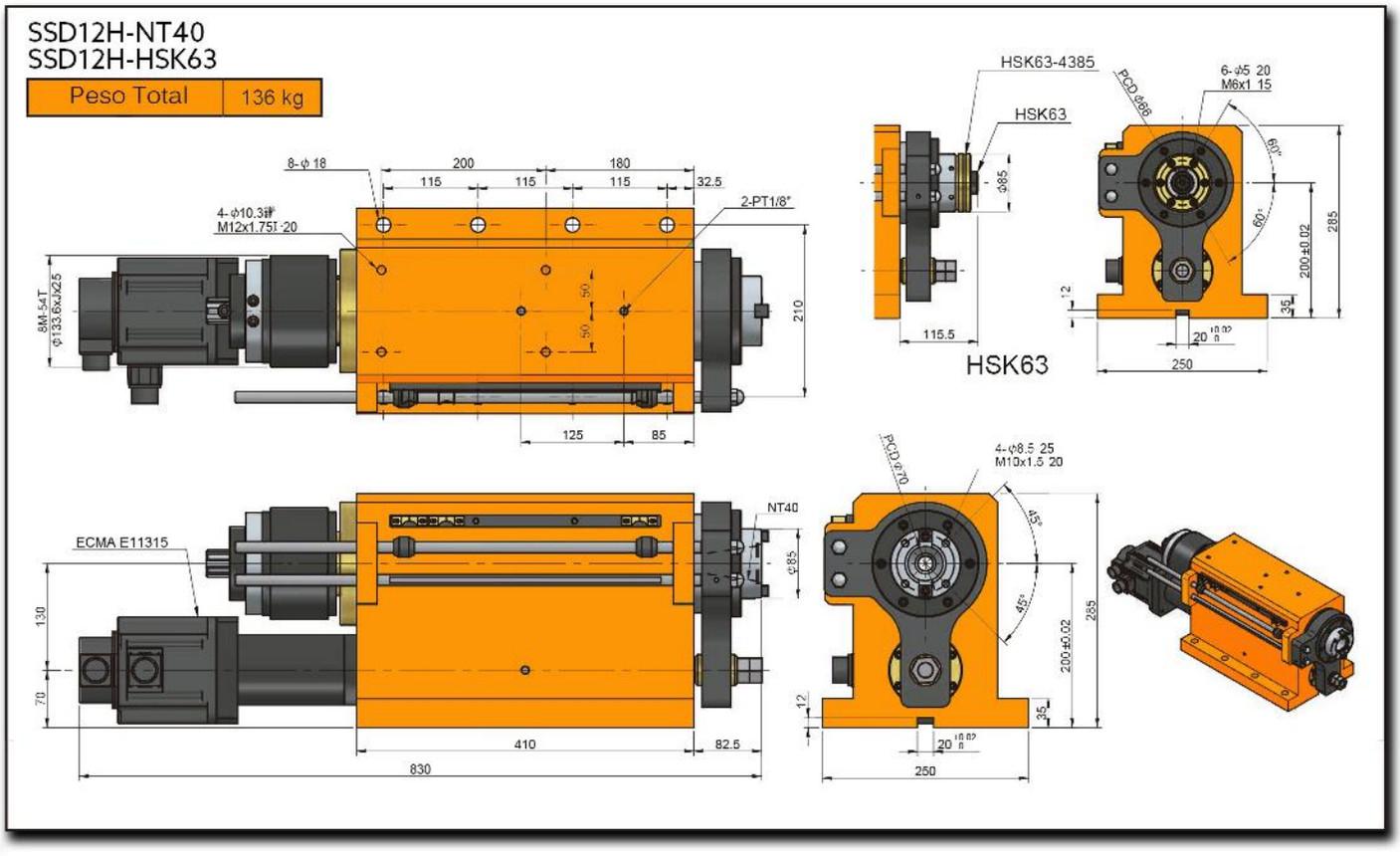

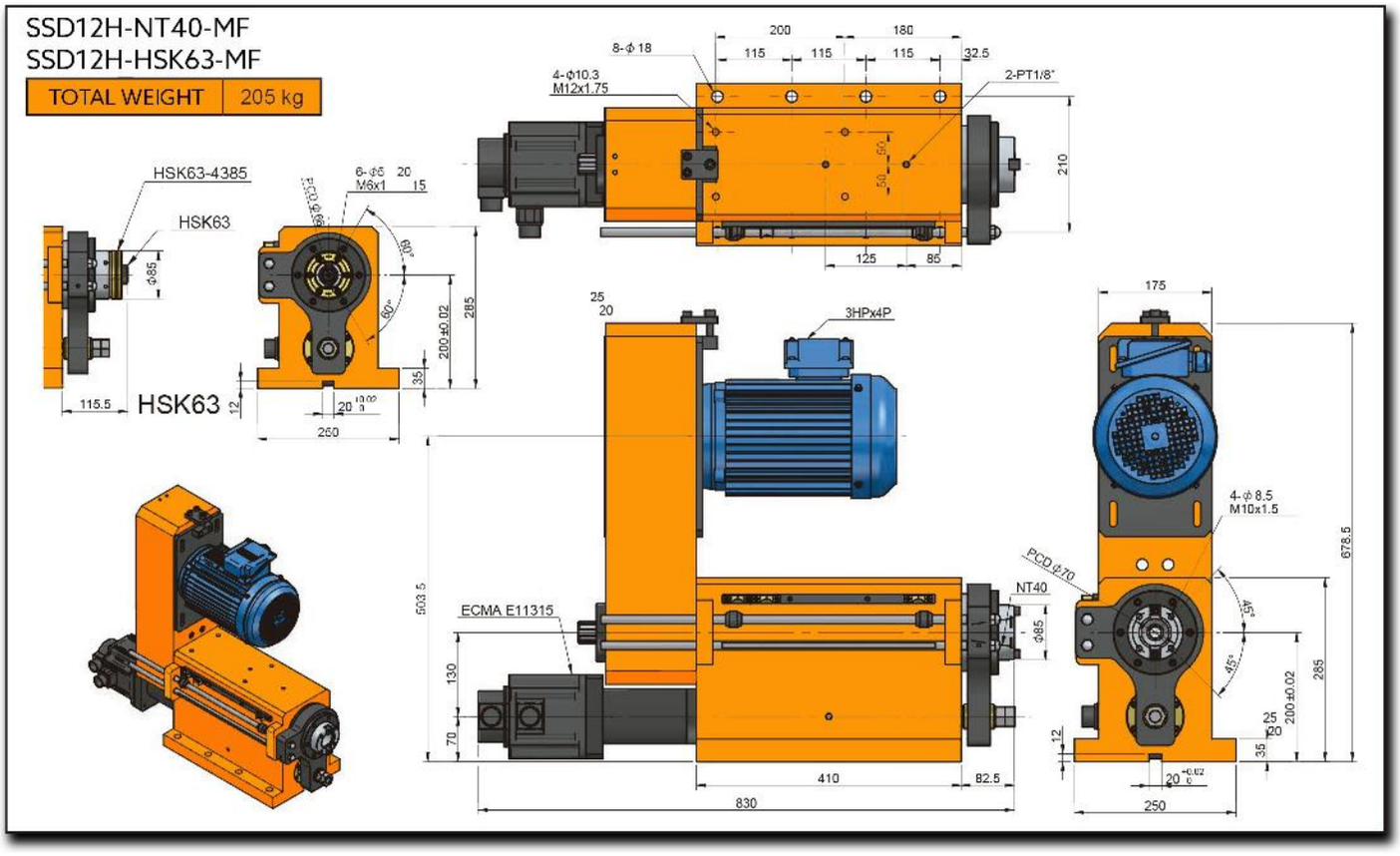
SSD12H-NT40-MF
SSD12H-HSK63-MF
TOTAL WEIGHT
205 kg
HSK63-4385
HSK63
HSK63
8-ϕ 18
4-ϕ10.3
M12x1.75
2-PT1/8"
3HPx4P
ECMA E11315
NT40
PCD ϕ70
4-ϕ 8.5
M10x1.5
830
410
250
175
678.5
503.5
210
125
85
200
180
115
32.5
285
200±0.02
35
12
115.5
250

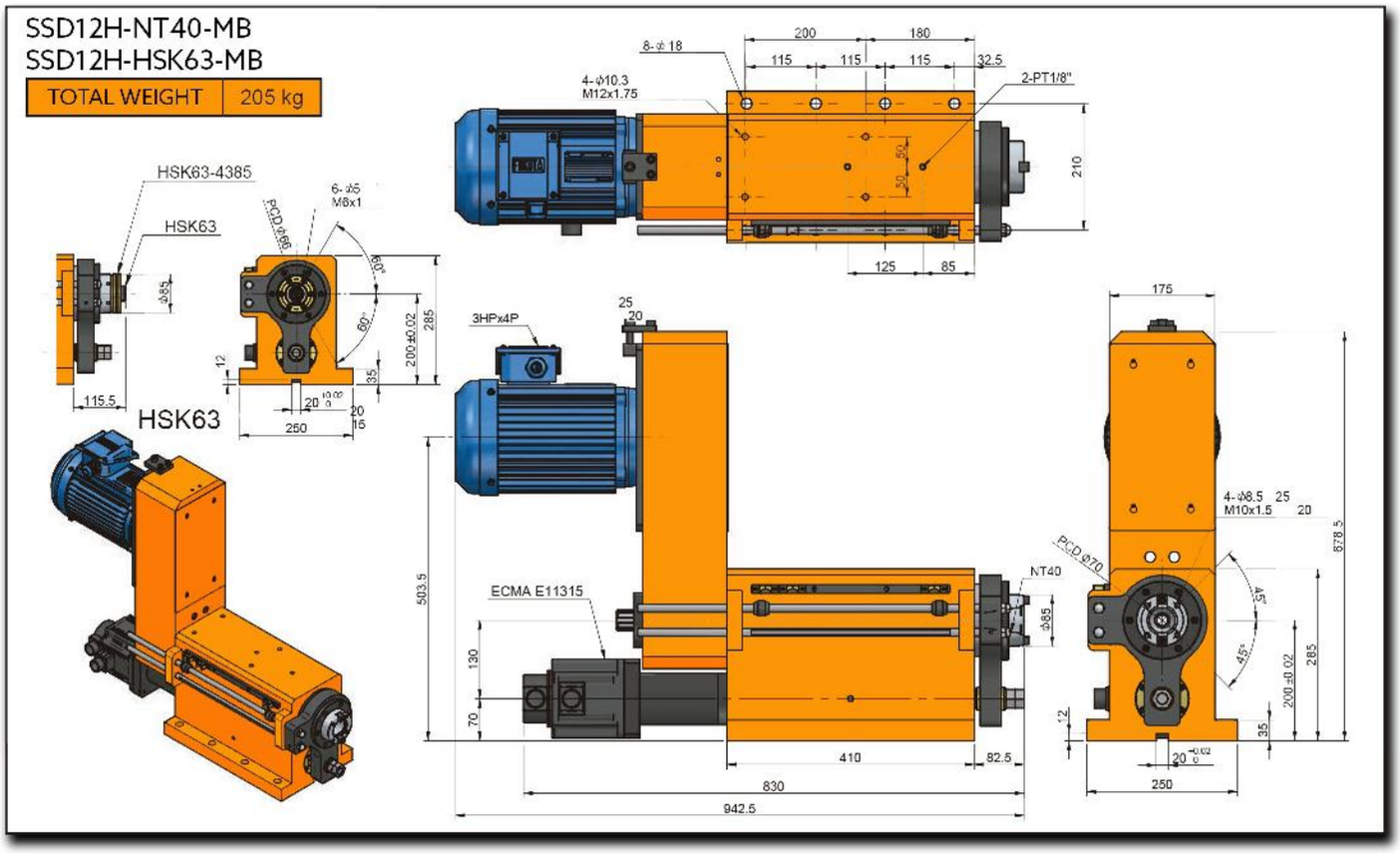
SSD12H-NT40-MB
SSD12H-HSK63-MB
TOTAL WEIGHT
205 kg
HSK63-4385
HSK63
HSK63
3HPx4P
ECMA E11315
NT40
PCD ø70
PCD ø66
2-PT1/8"
4-ø10.3
M12x1.75
8-ø 18
4-ø8.5
M10x1.5
6-ø5
M8x1
200
180
115
115
115
32.5
210
125
85
175
25
20
503.5
130
70
410
82.5
830
942.5
250
285
200±0.02
35
12
45°
678.5

SSD15-150

Drilling & Tapping Servo Spindle Head

Patent No. M446677

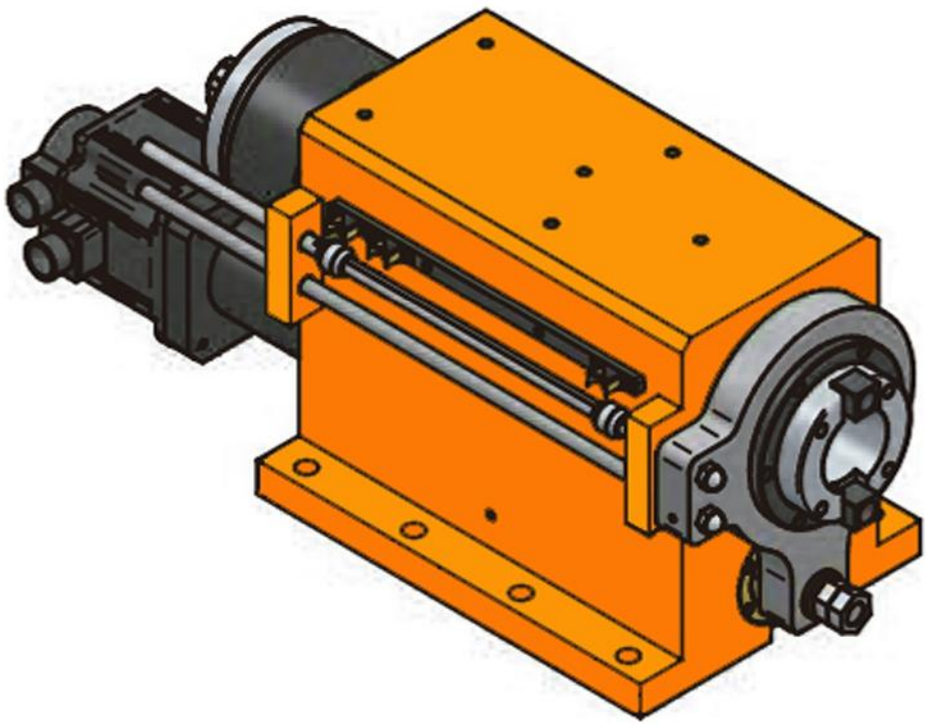

Characteristics & Dimensions

MODEL	SSD15-150
Drilling Capacity (S45C)	Ø50
Maximum Stroke	150 mm.
Maximum Speed (r.p.m.)	1,600
Maximum Power (3 Phases)	5 Hp x 4P
Spindle Pulley	8M-62T, Ø156.50 x J x 25
Spindle Bearings	6014Z x 1 | 6012Z x 1 32014 x 1 | 32012 x 1
Pulley Bearings	6213ZZ x 2
Ball Screw Block Bearings	7205 x 2
Ball Screw Block Seals	TC30-50-10 x 2
Front Cover Seal	TC150-180-14 x 1
Piston Seal	TC90-110-12 x 1
Ball Screw	Ø32 x 5 x C5

** Roundness ≤ 0.003 mm.
*** All dimensions are given in millimeters.

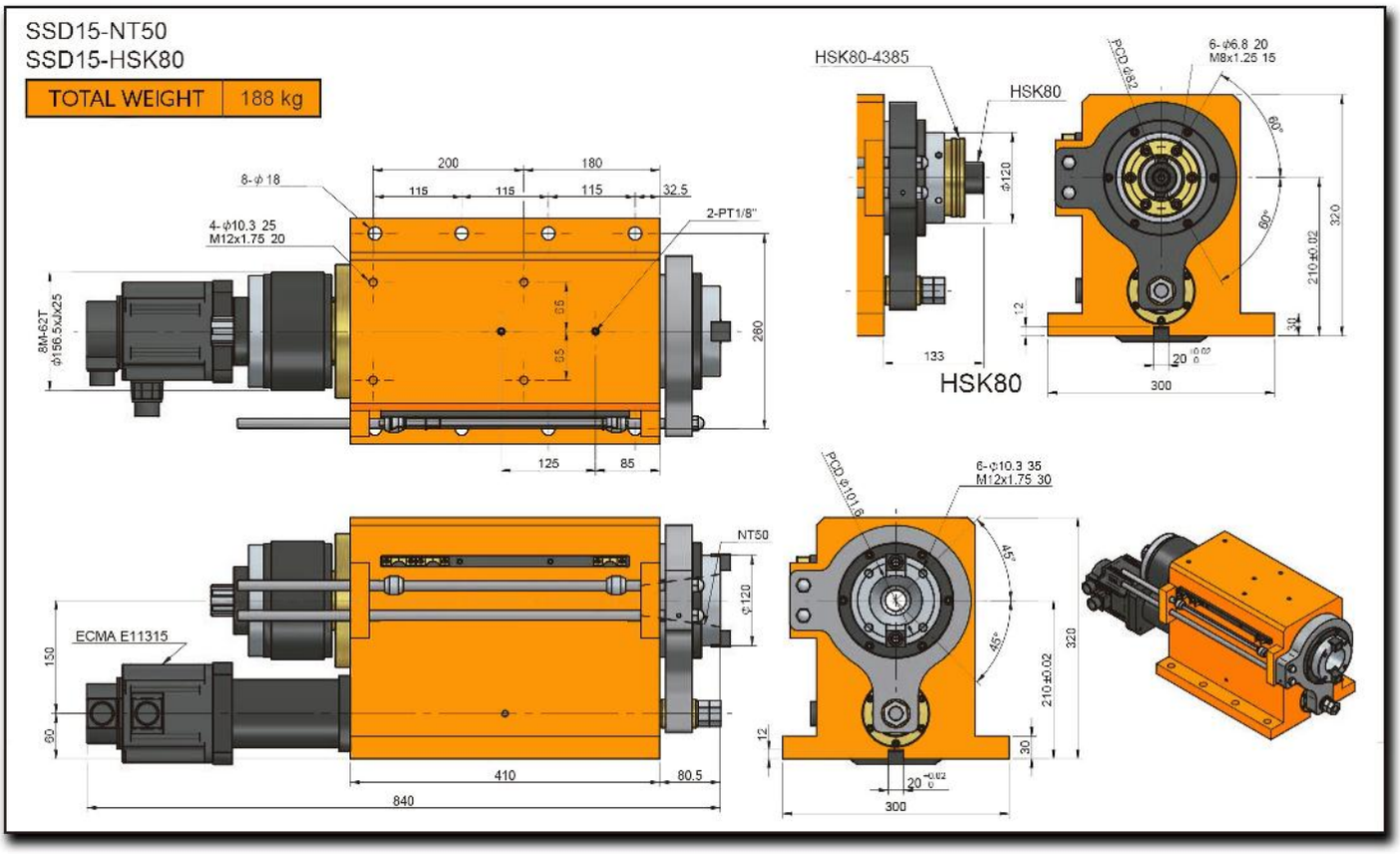
SSD15-NT50
SSD15-HSK80
TOTAL WEIGHT 188 kg
HSK80-4385
HSK80
HSK80
8-φ18
4-φ10.3 25
M12x1.75 20
2-PT1/8"
8M-62T
φ156.5xJx25
200
180
115
115
115
32.5
260
125
85
NT50
ECMA E11315
150
60
410
80.5
840
6-φ6.8 20
M8x1.25 15
PCD φ82
60°
60°
320
210±0.02
30
12
133
300
6-φ10.3 35
M12x1.75 30
PCD φ101.6
45°
45°
320
210±0.02
30
12
300

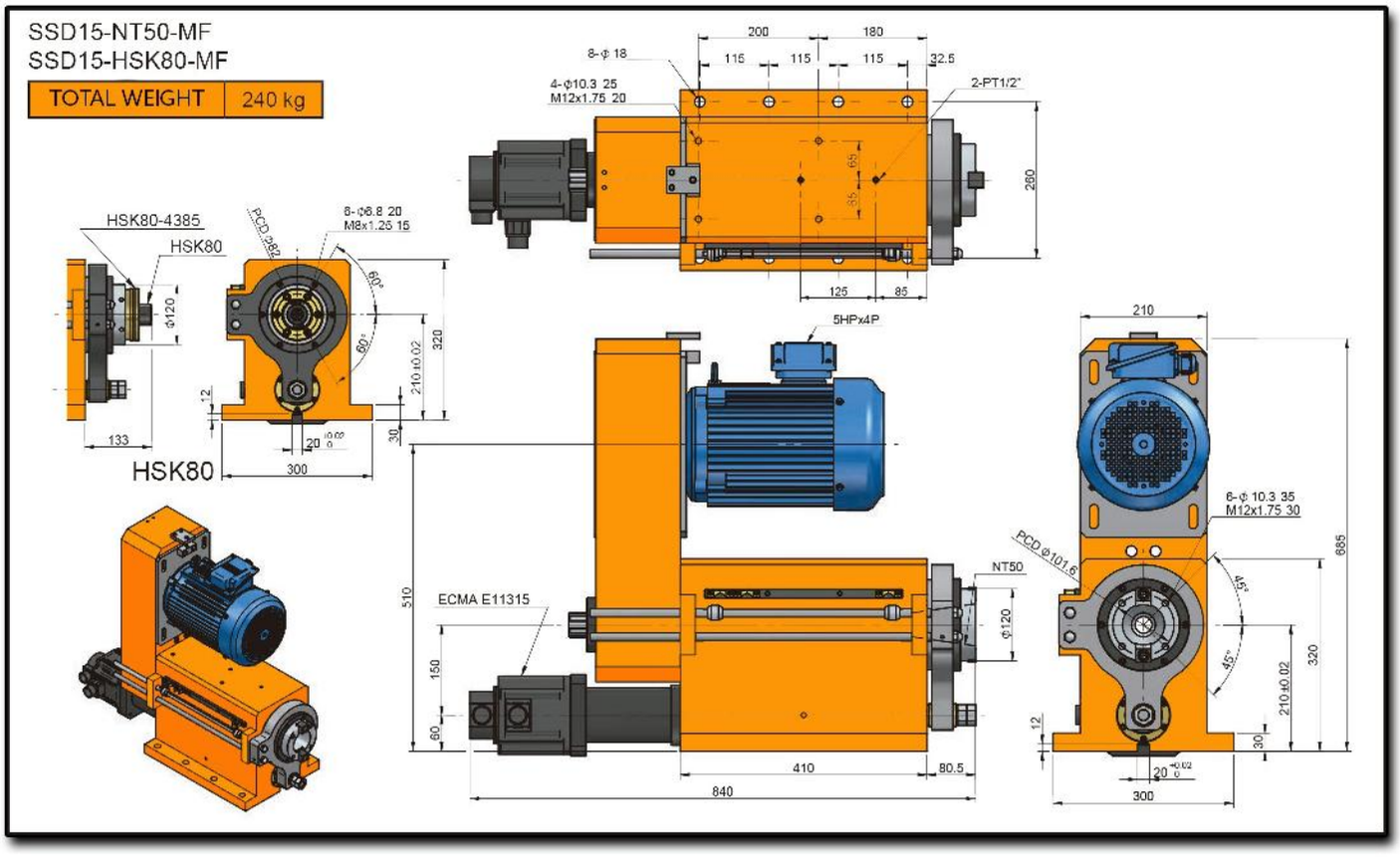
SSD15-NT50-MF
SSD15-HSK80-MF
TOTAL WEIGHT
240 kg
HSK80-4385
HSK80
PCD 282
8-φ6.8 20
M8x1.25 15
HSK80
8-φ 18
4-φ10.3 25
M12x1.75 20
2-PT1/2"
5HPx4P
ECMA E11315
NT50
PCD φ101.6
6-φ 10.3 35
M12x1.75 30
200
180
115
115
115
32.5
260
125
85
210
685
320
210±0.02
300
510
150
60
410
80.5
840
133
12
30
45°
60°

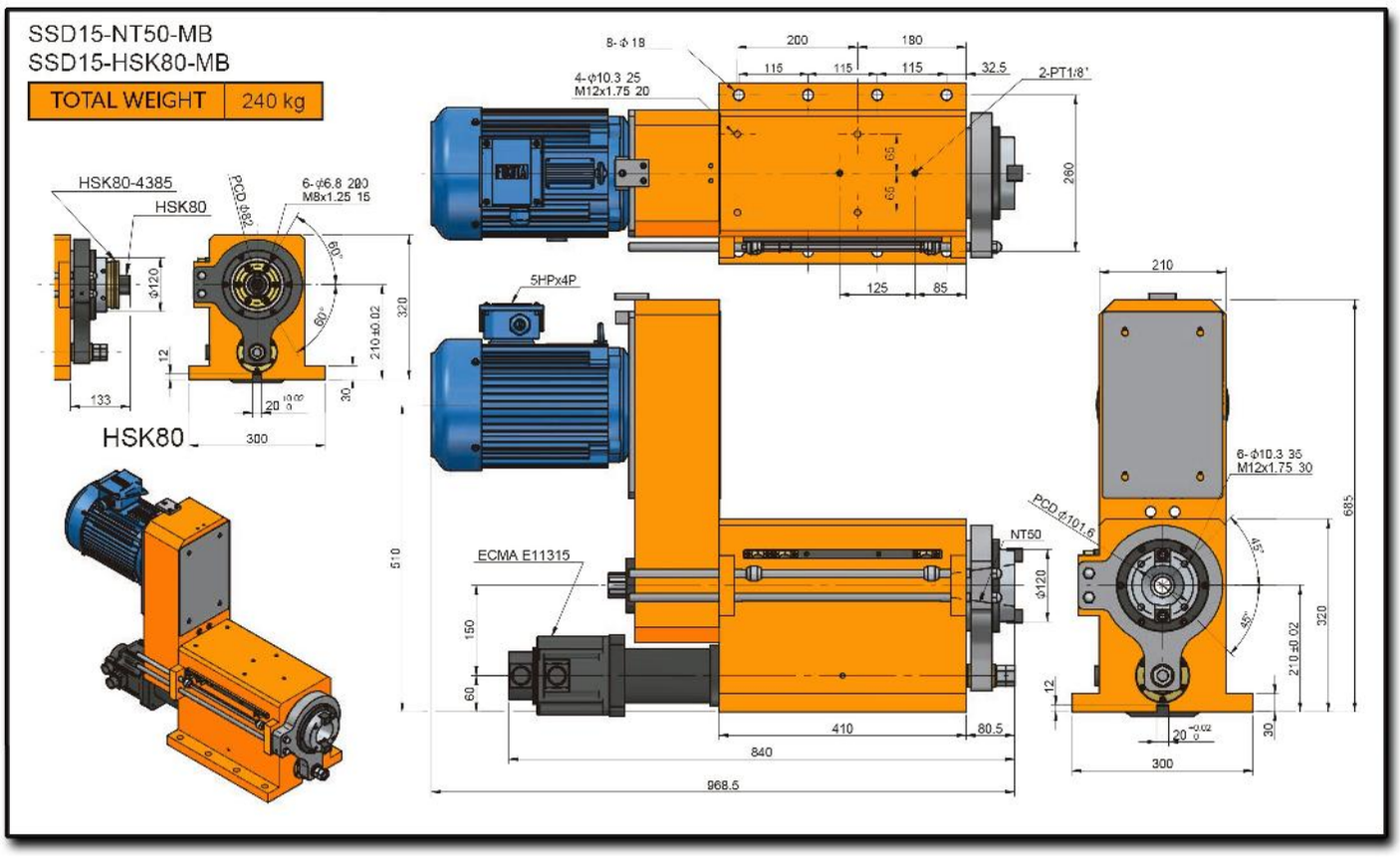
SSD15-NT50-MB
SSD15-HSK80-MB
TOTAL WEIGHT
240 kg
HSK80-4385
HSK80
PCD ϕ82
6-ϕ6.8 200
M8x1.25 15
HSK80
8-ϕ18
4-ϕ10.3 25
M12x1.75 20
2-PT1/8'
5HPx4P
ECMA E11315
NT50
PCD ϕ101.6
6-ϕ10.3 35
M12x1.75 30
200
180
115
115
115
32.5
260
125
85
210
685
320
210±0.02
510
150
60
410
80.5
840
968.5
300
133
12
30
20

SSD15H-150

High Performance Drilling & Tapping Servo Spindle Head

Patent No. M446677

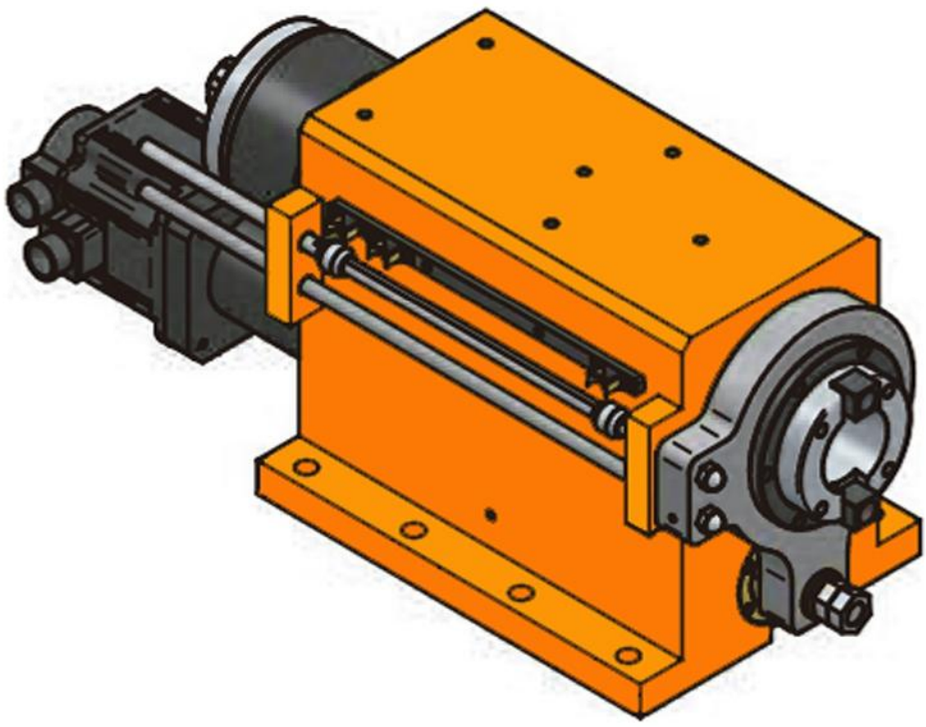

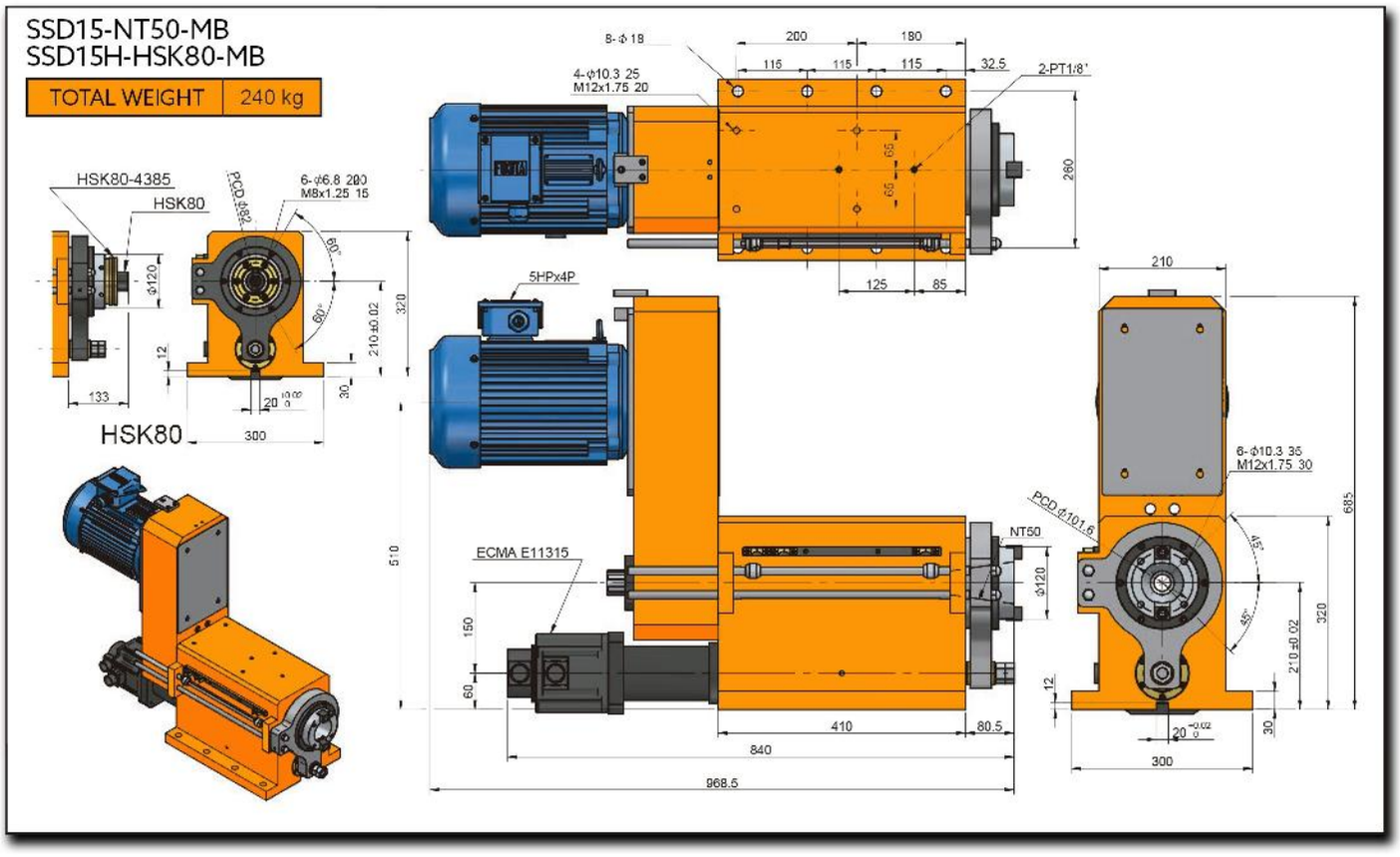
SSD15-NT50-MB
SSD15H-HSK80-MB
TOTAL WEIGHT
240 kg
HSK80-4385
HSK80
PCD ϕ82
6-ϕ6.8 200
M8x1.25 15
HSK80
8-ϕ18
4-ϕ10.3 25
M12x1.75 20
2-PT1/8'
5HPx4P
ECMA E11315
NT50
PCD ϕ101.6
6-ϕ10.3 35
M12x1.75 30
200
180
115
115
115
32.5
260
125
85
210
685
320
210±0.02
510
150
60
410
80.5
840
968.5
300
133
12
30
ϕ120
60°
45°

Characteristics & Dimensions

MODEL	SSD15H-150
Drilling Capacity (S45C)	*Ø50*
Maximum Stroke	*150 mm.*
Maximum Speed (r.p.m.)	*4,000*
Maximum Power (3 Phases)	*5 H.p x 4P*
Spindle Pulley	*8M-62T, Ø156.50 x J x 25*
Spindle Bearings	*7014 x 2* *7012 x 2*
Pulley Bearings	*6213ZZ x 2*
Ball Screw Block Bearings	*7205 x 2*
Ball Screw Block Seals	*TC30-50-10 x 2*
Front Cover Seal	*TC150-180-14 x 1*
Piston Seal	*TC90-110-12 x 1*
Ball Screw	*Ø32 x 5 x C5*

*** Roundness ≤ 0.003 mm.*
**** All dimensions are given in millimeters.*

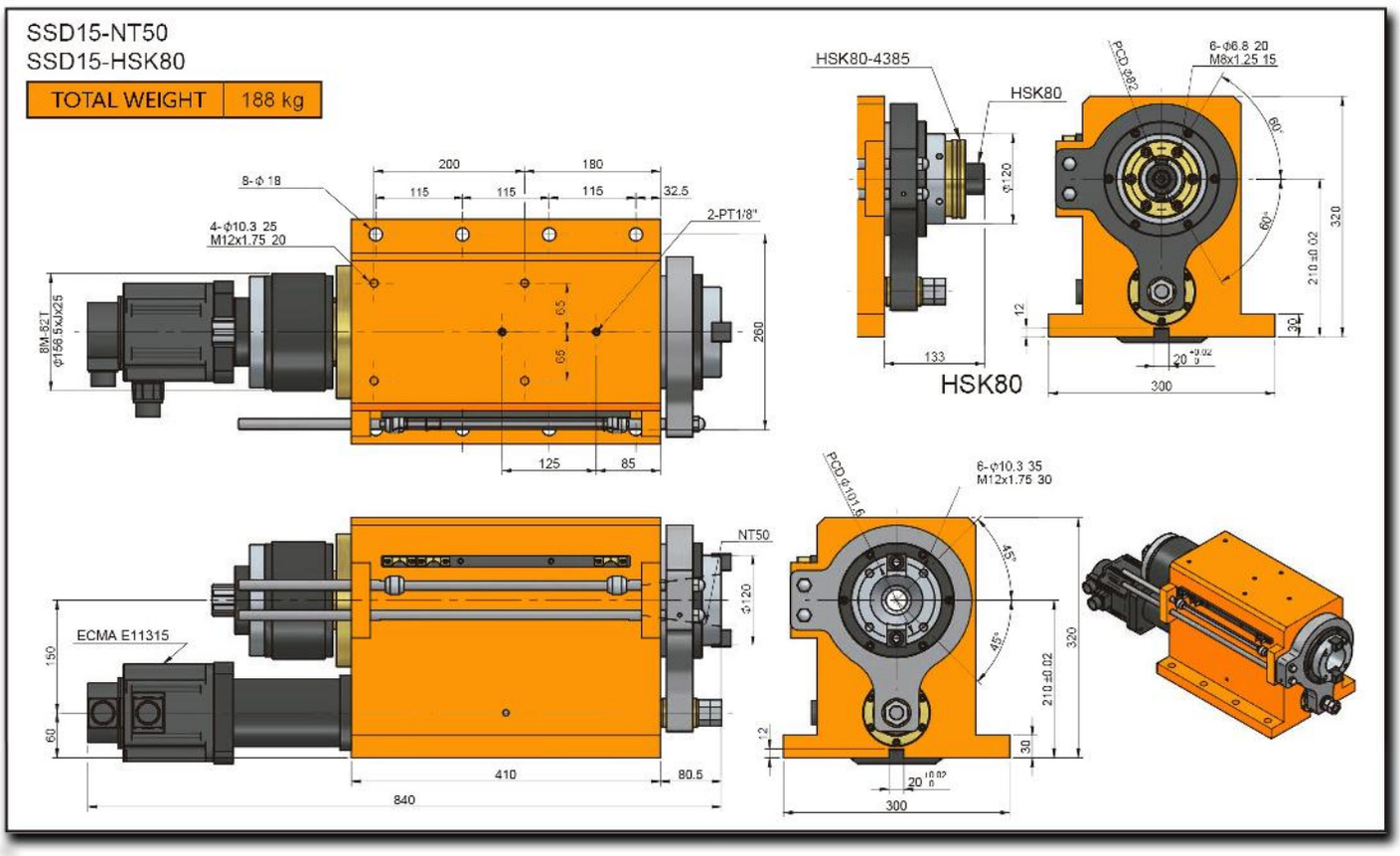
SSD15-NT50
SSD15-HSK80
TOTAL WEIGHT
188 kg
HSK80-4385
HSK80
6-φ6.8 20
M8x1.25 15
8-φ 18
4-φ10.3 25
M12x1.75 20
2-PT1/8"
200
180
115
115
115
32.5
260
125
85
NT50
ECMA E11315
410
80.5
840
6-φ10.3 35
M12x1.75 30
320
300
133
HSK80

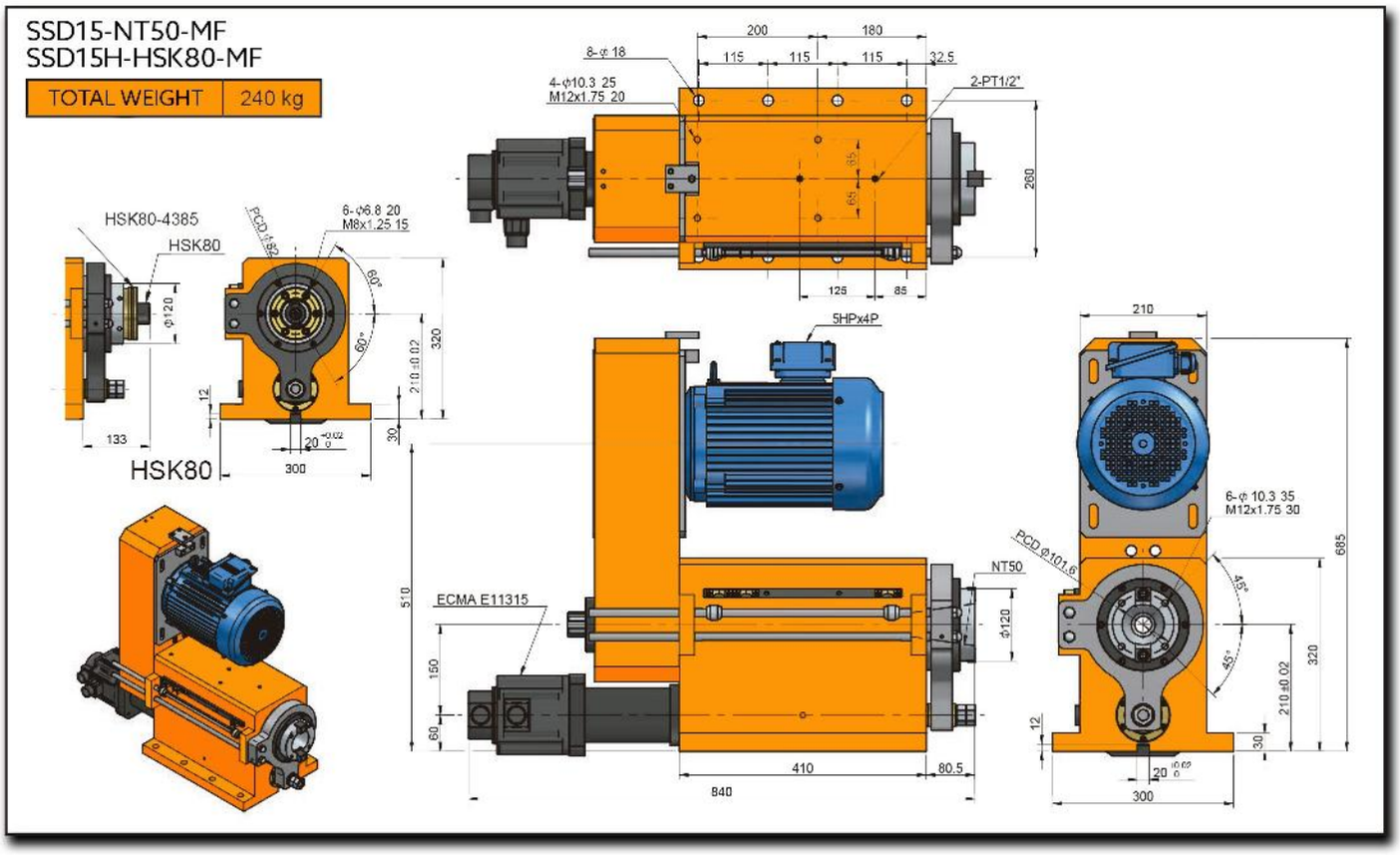
SSD15-NT50-MF
SSD15H-HSK80-MF
TOTAL WEIGHT
240 kg
HSK80-4385
HSK80
HSK80
6-φ6.8 20
M8x1.25 15
8-φ 18
4-φ10.3 25
M12x1.75 20
2-PT1/2"
5HPx4P
ECMA E11315
NT50
6-φ 10.3 35
M12x1.75 30
PCD φ101.6
200
180
115
115
115
32.5
260
125
85
210
685
320
210±0.02
300
410
80.5
840
510
150
60
133
12
30
45°
60°

SSFC SERIES

SERVO TAPPING/DRILLING HEAD WITH AUTOMATIC TOOL CHANGER SYSTEM FLANGE TYPE

SSFC11-120M-BT40

Drilling/Tapping Spindle Head With Automatic Tool Changer System Flange Type

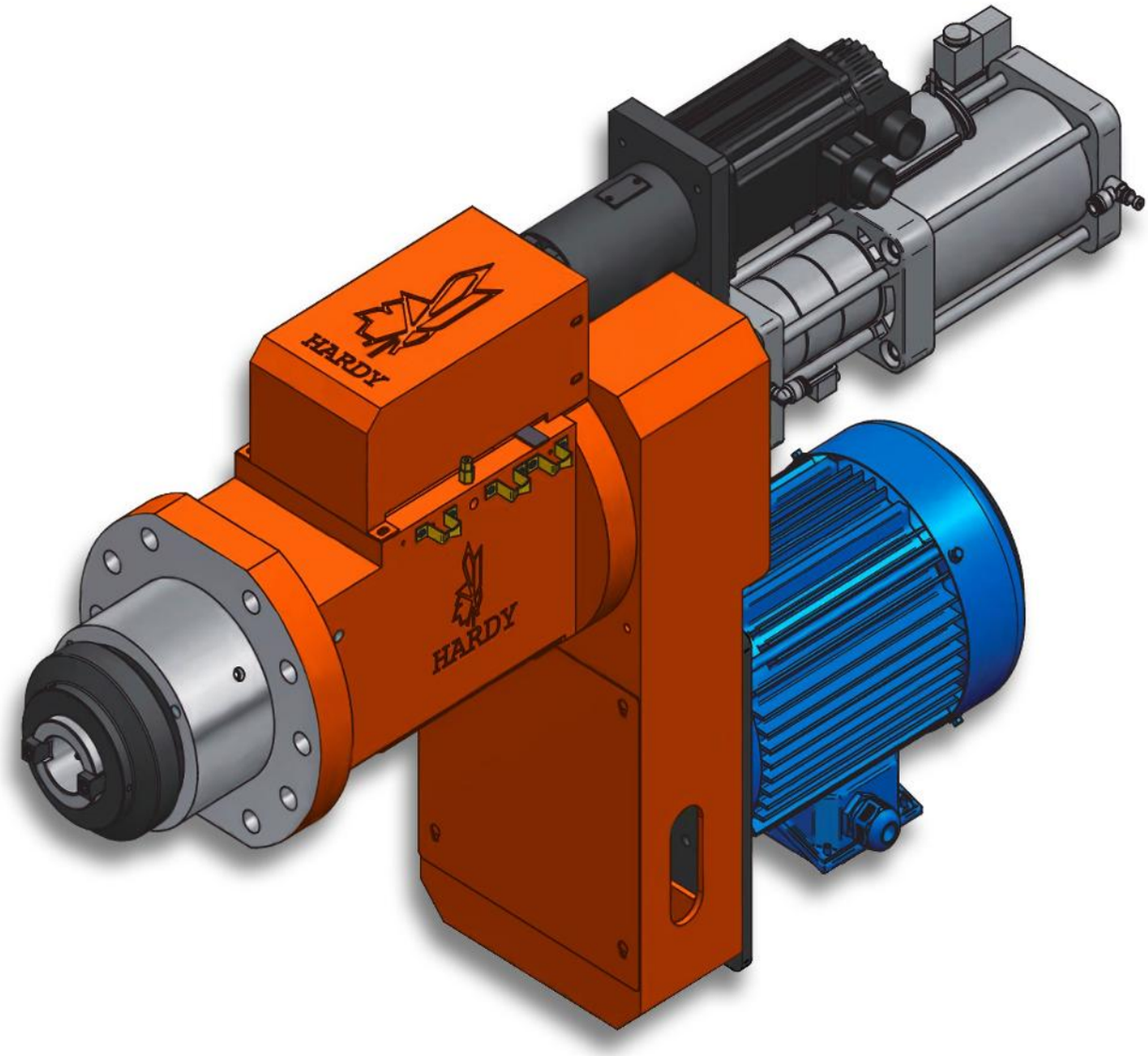

Characteristics & Dimensions

MODEL	SSFC11-120M
Maximum Drilling Capacity *(S45C)*	*Ø35*
Spindle Type	*BT-40*
Maximum Spindle Stroke	*120.00*
Maximum Spindle Speed *(r.p.m.)*	*2,200.00*
Maximum Spindle Power *(3 Phases)*	*3HP x 4P (2.2 Kw.)*
3 Phases Motor *(Optional)*	*5HP x 4P (3.7 Kw.)*
Spindle Pulley	*8M-64T*
Spindle Bearings	*6210ZZ x 2 | 30210 x 2*
Pulley Bearings	*6015ZZ x 2*
Front Cover Seal	*TC110-130-13 x 1*
Spindle Seal	*TC75-90-12 x 1*
Piston O-Ring	*P110 x 2*
Front Cover O-Ring	*G85 x 1 | G110 x 1*

**** Roundness ≤ 0.003mm.*
***** All dimensions are given in millimeters.*

SSFC11H-120M-BT40

High Performance Drilling/Tapping Spindle Head With Automatic Tool Changer System Flange Type

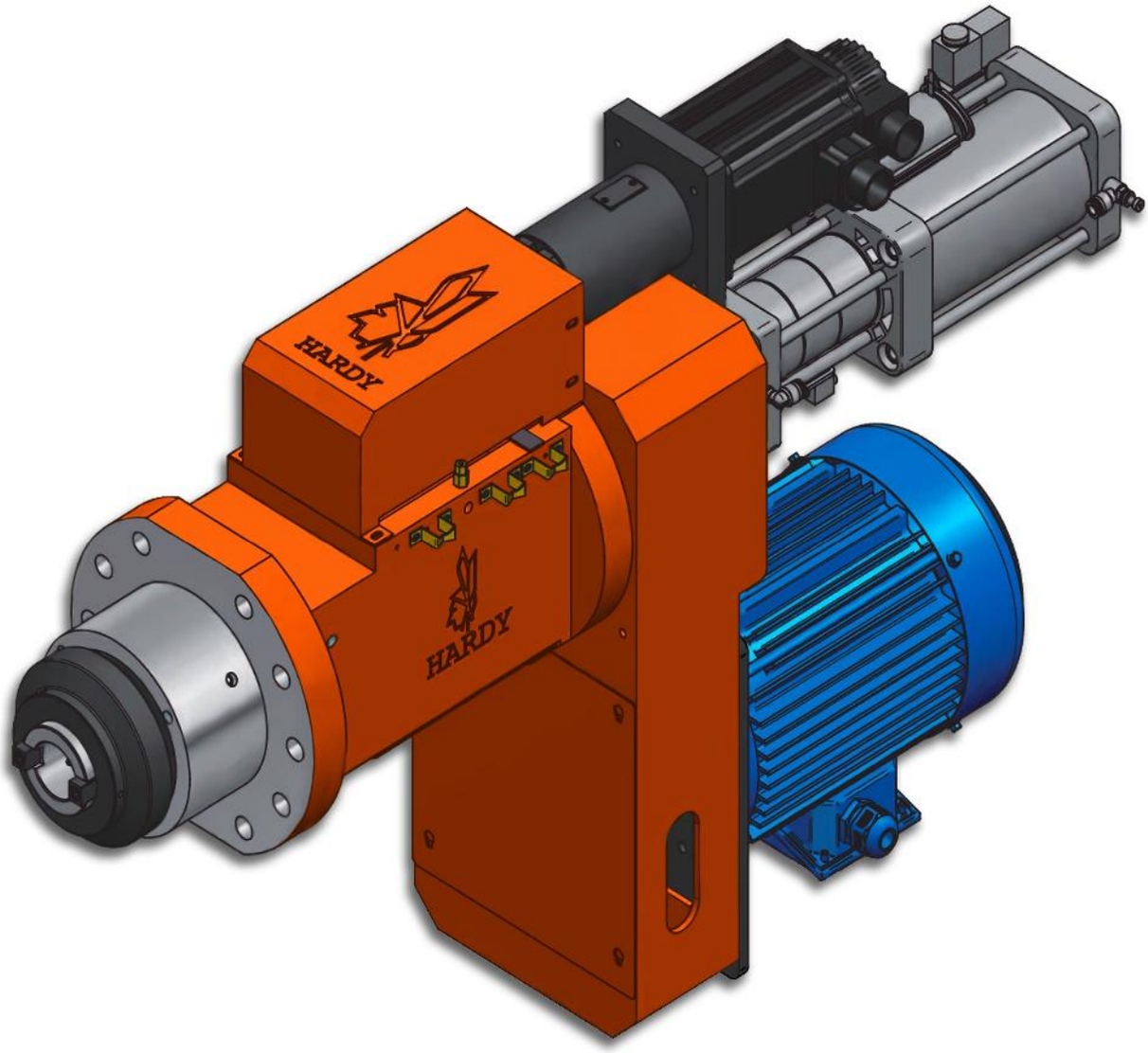

Characteristics & Dimensions

MODEL	SSFC11H-120M
Maximum Drilling Capacity *(S45C)*	*Ø35*
Spindle Type	*BT-40*
Maximum Spindle Stroke	*120.00*
Maximum Spindle Speed *(r.p.m.)*	*6,000.00*
Maximum Spindle Power *(3 Phases)*	*3HP x 4P (2.2 Kw.)*
3 Phases Motor *(Optional)*	*5HP x 4P (3.7 Kw.)*
Spindle Pulley	*8M-64T*
Spindle Bearings	*6210ZZ x 2 | 30210 x 2*
Pulley Bearings	*6015ZZ x 2*
Front Cover Seal	*TC110-130-13 x 1*
Spindle Seal	*TC75-90-12 x 1*
Piston O-Ring	*P110 x 2*
Front Cover O-Ring	*G85 x 1 | G110 x 1*

**** Roundness ≤ 0.003mm.*
***** All dimensions are given in millimeters.*

SSFD SERIES

DRILLING/TAPPING SPINDLE HEAD FLANGE TYPE

SSFD11-120

Servo Facing Spindle Head Flange Type

Patent No. M510810

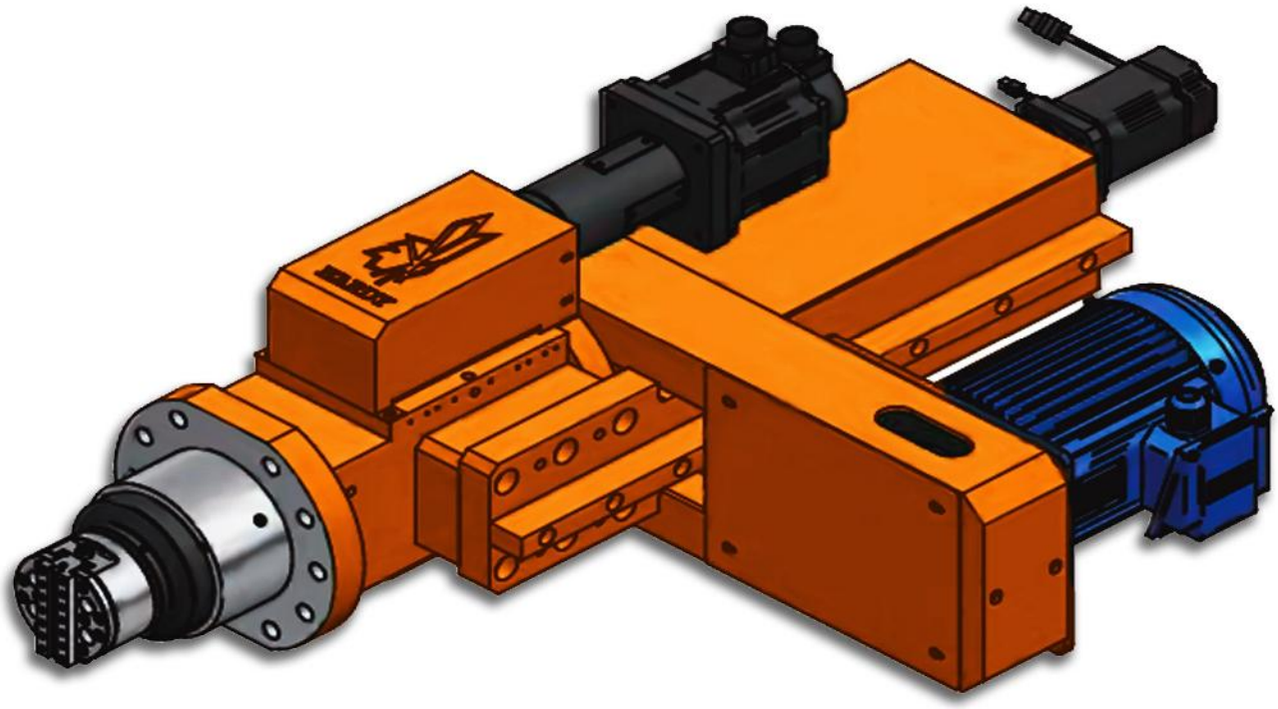

Characteristics & Dimensions

MODEL	SSFD11-120M-FB45
Maximum Stroke	*120*
Maximum Spindle Speed *(r.p.m.)*	*1,600.00*
Maximum 3-Phase Equipment Power	*3 H.P. X 4P*
Spindle Pulley	*8M-64T x 56.5W*
Spindle Bearings	*6210ZZ x 2 | 30210 x 2*
Pulley Bearings	*6015ZZ x 2*
Front Cover Seals	*TC110-130-13 x 1*
Spindle Seals	*TC75-90-12 x 1*
Piston O-Rings	*P110 x 2*
Front Cover O-Rings	*G85 x 1 | G110 x 1*
Spindle Feed Packed Screw	*Ø25 x5 x C5*
Facing Slide Packed Screw	*Ø20 x 5 x C5*
Ball Screw Bearing Housing Bearings	*7203 x 4*
Ball Screw Bearing Housing Seals	*TC20-40-8 x 1 | TC24-40-8 x 1 TC24-38-8 x 2*
Facing Head Bearings	*7207 x 2 | 7203 x 2*
Facing Head Seals	*TC45-70-8 x 1 | TC24-40-8 x 1 | TC24-38-8 x 1*
Single Slide Facing Head	*FA-408*
Facing Slide Stroke	*8.00 mm*

** Slide Auto Repeat ≤ 0.005 mm.
*** Roundness ≤ 0.003mm.
**** All dimensions are given in millimeters.

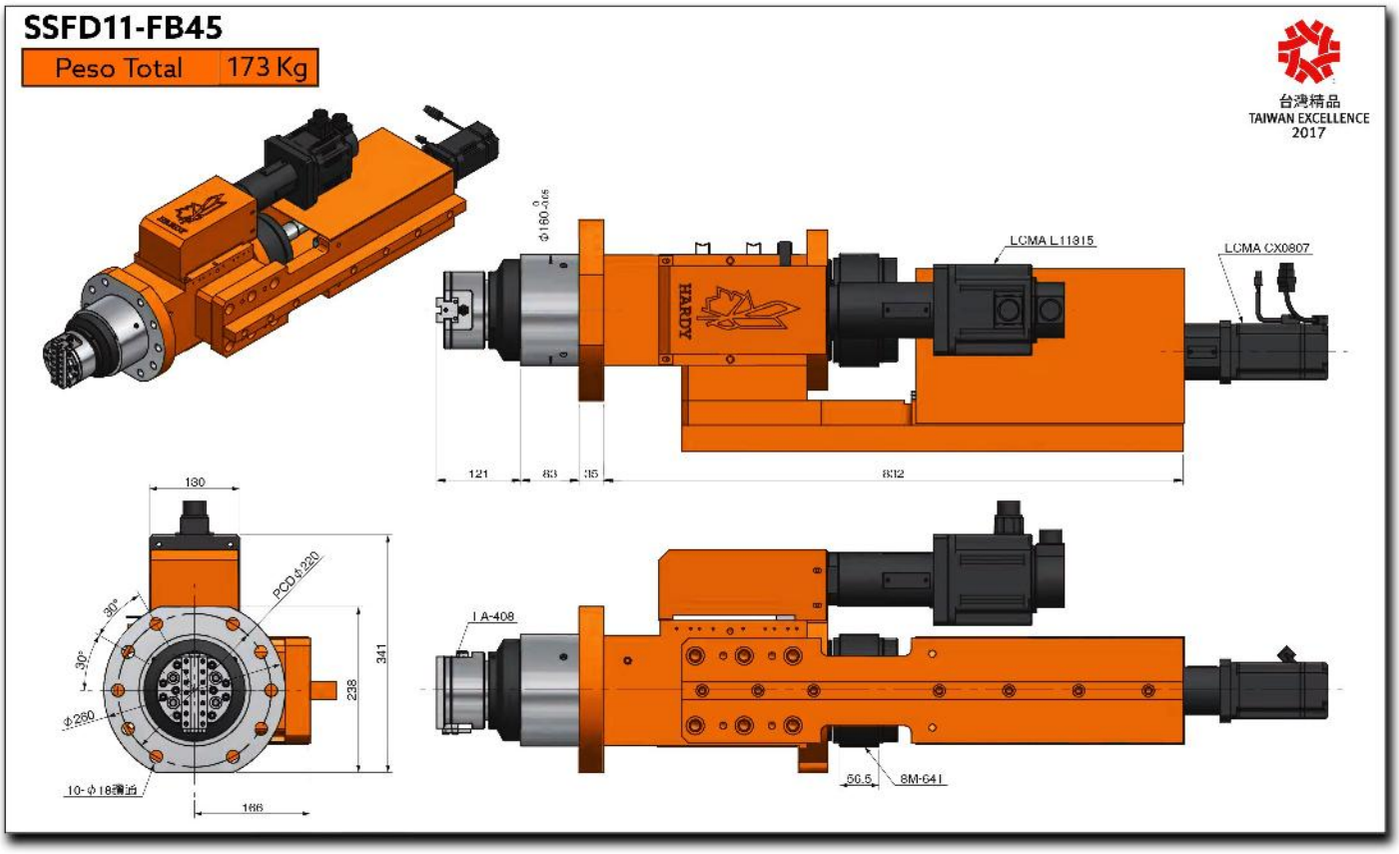
SSFD11-FB45
Peso Total 173 Kg
台灣精品
TAIWAN EXCELLENCE
2017
LCMA L11315
LCMA CX0807
HARDY
121
83
35
832
130
PCD φ220
30°
30°
φ260
10-φ18
166
238
341
I A-408
56.5
8M-641

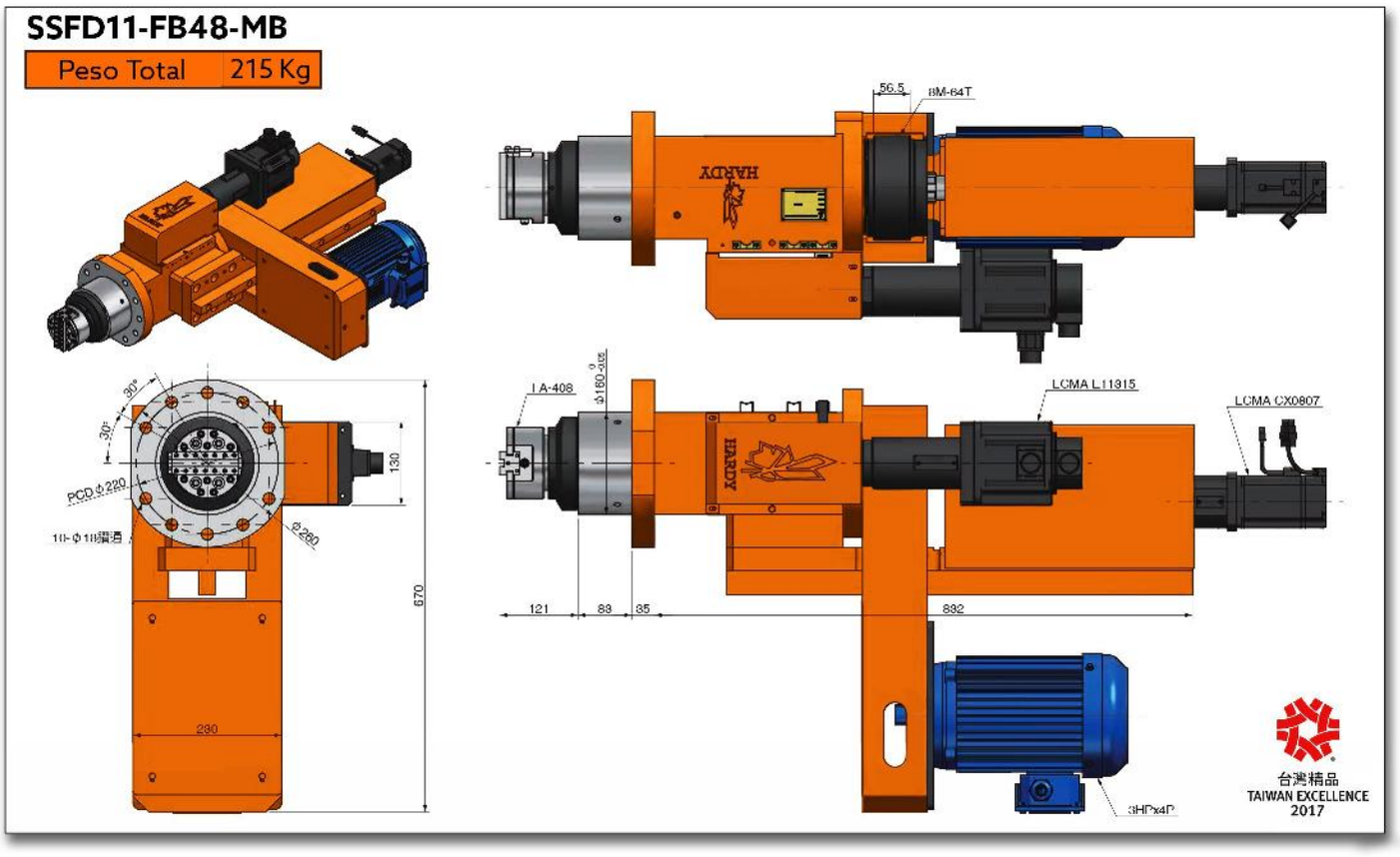
SSFD11-FB48-MB
Peso Total 215 Kg
56.5
BM-64T
HARDY
LA-408
LCMA L11315
LCMA CX0807
121
89
85
882
PCD Φ220
Φ280
130
670
230
台灣精品
TAIWAN EXCELLENCE
2017

SSFDL SERIES

DRILLING/TAPPING SPINDLE HEAD WITH LINEAR RAIL FLANGE TYPE

SSFDL11-120MK

Drilling & Tapping Spindle Head With Linear Rail Flange Type

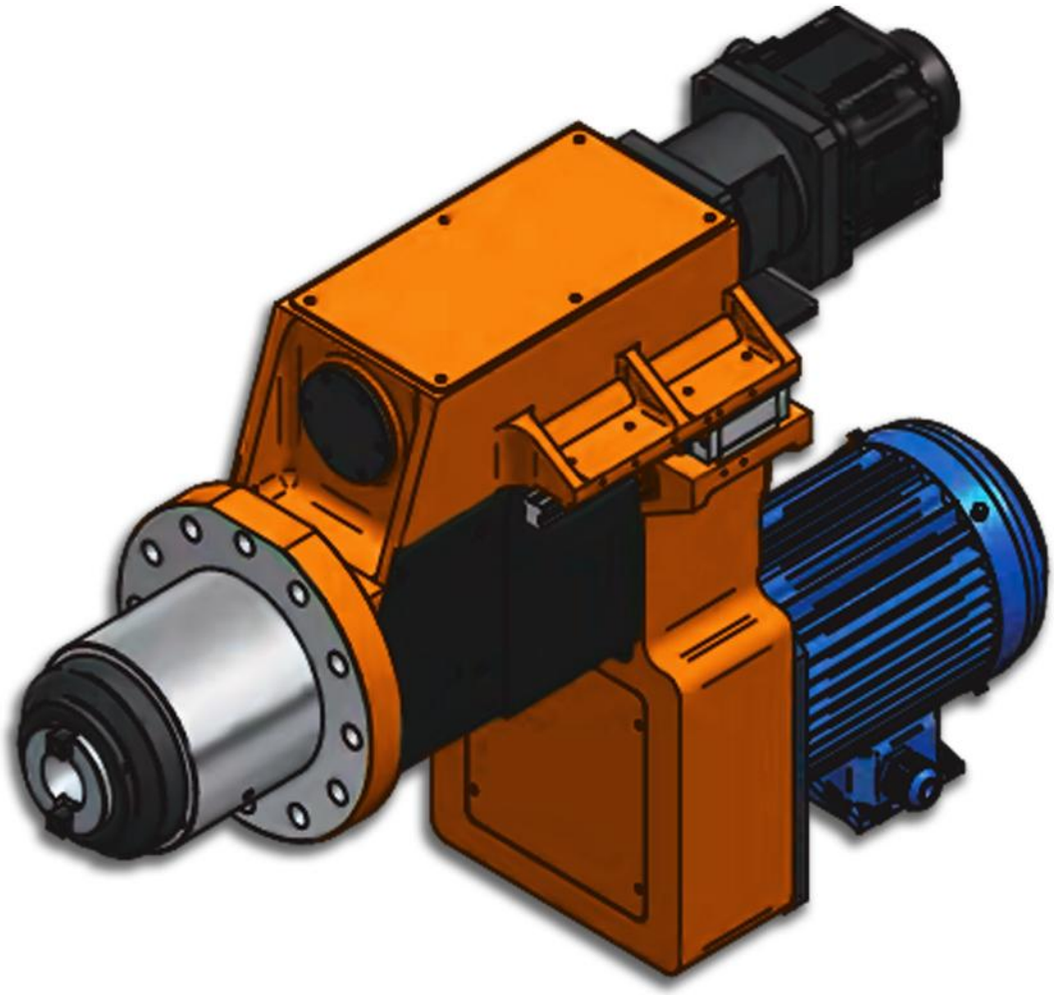

Characteristics & Dimensions

MODEL	SSFDL11-120MK-NT40
Maximum Drilling Capacity *(S45C)*	*Ø35*
Maximum Tapping Capacity *(S45C)*	*M35*
Maximum Spindle Stroke	*120.00*
Maximum Spindle Speed *(r.p.m.)*	*1,800.00*
Maximum Spindle Power *(3 Phases)*	*3HP x 49*
Spindle Pulley	*8M-50T x 62W*
Spindle Bearing	*6210Z x 2 | 30210 x 2*
Bearing Of Ballscrew Bearing Block	*7205 x 2*
Seal Of Ballscrew Bearing Block	*TC32-48-8 x 1*
Front Cover Seal	*TC110-130-13 x 1*
Front Cover O-Ring	*G85 x 1 | G110 x 1*
Spindle Seal	*TC75-90-12 x 1*
Piston O-Ring	*P110 x 2*
Ball Screw Type	*Ø32 x 5 x C5*

**** Roundness ≤ 0.003mm.*
***** All dimensions are given in millimeters.*

SSFDL11-120MK-NT40

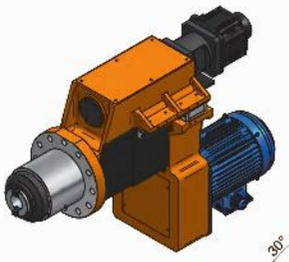

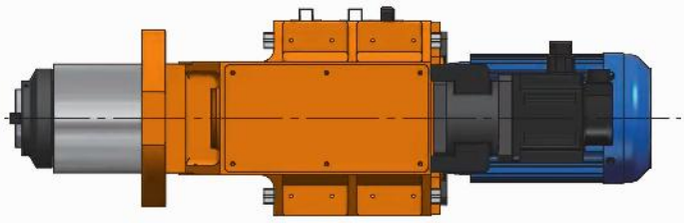

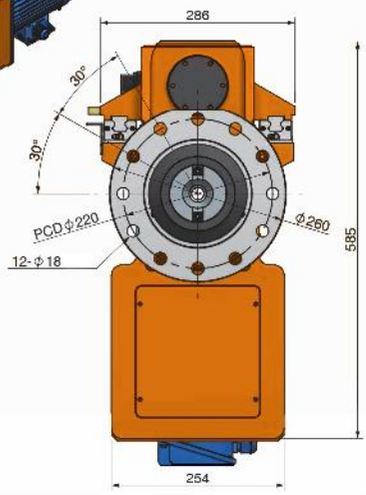

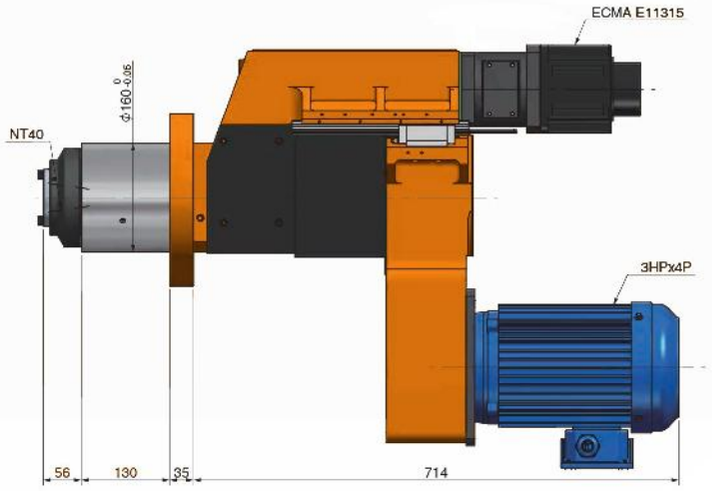

SSFDL11H-120MK

High Performance Drilling & Tapping Spindle Head With Linear Rail Flange Type

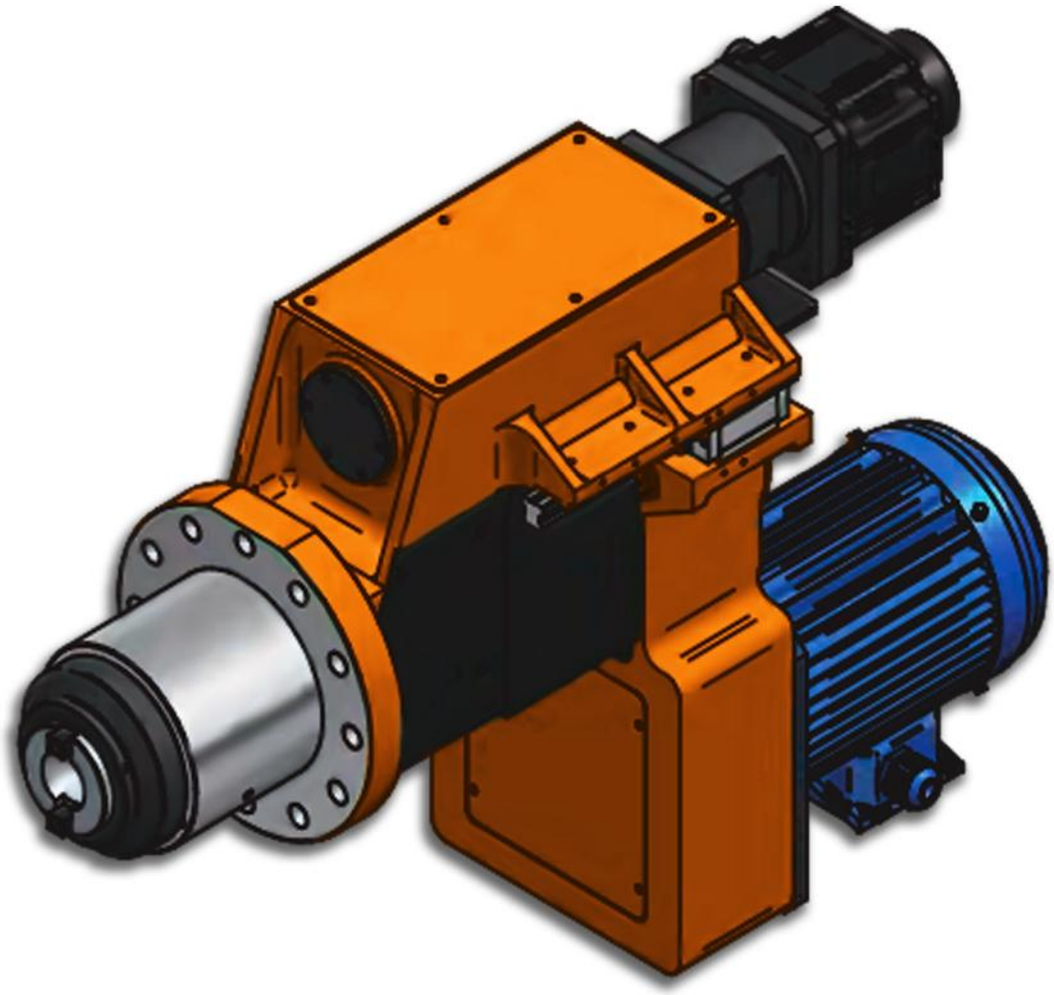

Characteristics & Dimensions

MODEL	SSFDL11H-120MK-NT40
Maximum Drilling Capacity *(S45C)*	***Ø35***
Maximum Tapping Capacity *(S45C)*	***M35***
Maximum Spindle Stroke	***120.00***
Maximum Spindle Speed *(r.p.m.)*	***4,000.00***
Maximum Spindle Power *(3 Phases)*	***3HP x 49***
Spindle Pulley	***8M-50T x 62W***
Spindle Bearing	***7210 x 4***
Bearing Of Ballscrew Bearing Block	***7205 x 2***
Seal Of Ballscrew Bearing Block	***TC32-48-8 x 1***
Front Cover Seal	***TC110-130-13 x 1***
Front Cover O-Ring	***G85 x 1 | G110 x 1***
Spindle Seal	***TC75-90-12 x 1***
Piston O-Ring	***P110 x 2***
Ball Screw Type	***Ø32 x 5 x C5***

**** Roundness ≤ 0.003mm.*
***** All dimensions are given in millimeters.*

SSFDL11H-120MK-NT40

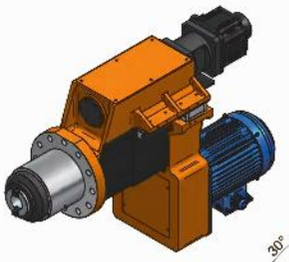

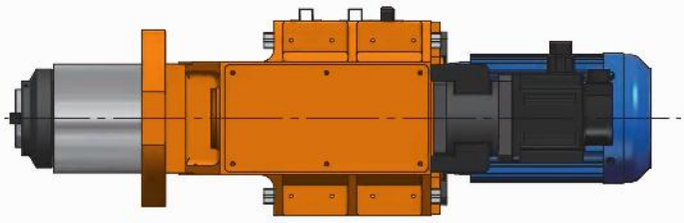

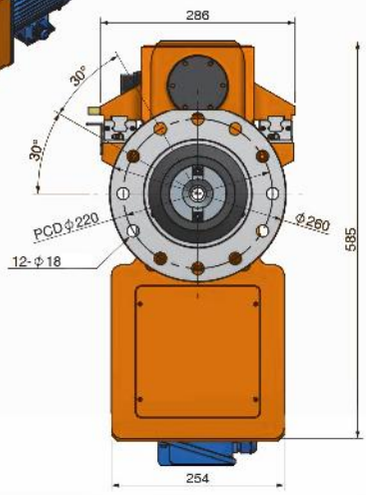

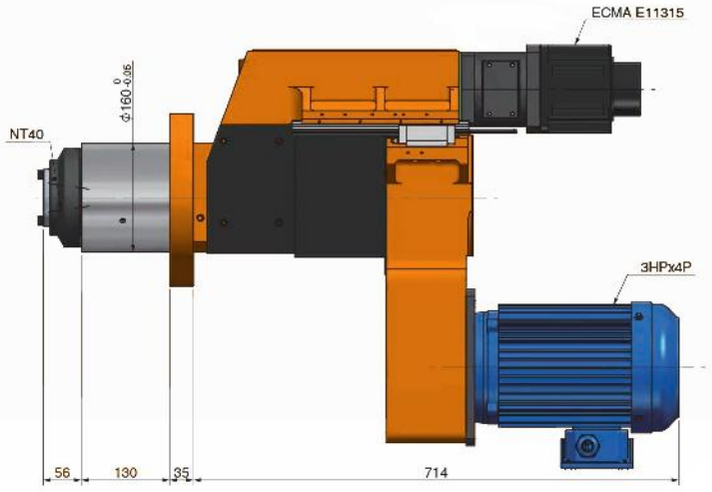

SSFSD SERIES

SERVO FACING SPINDLE HEADS FLANGE TYPE

SSFSD09-120M-NT30

Servo Facing Spindle Head Flange Type

Patent No. ***M510810***
Patent SIPO No. ***201520726205.6***

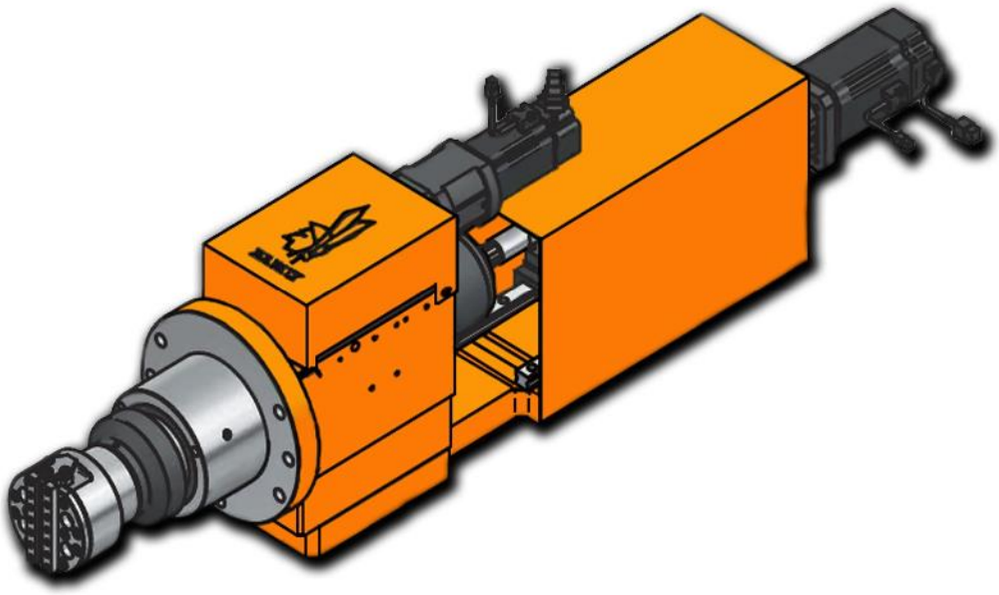

Characteristics & Dimensions

MODEL	SSFSD09-120M-NT30
Maximum Stroke	Ø50
Maximum Speed (r.p.m.)	150 mm.
Electric Power Maximum Power	1,600
Spindle Pulley	5 H.p. x 4P
Spindle Bearings	8M-62T | Ø156.5 x J x 25
Pulley Bearings	6014Z x 1 | 6012Z x 1 32014 x 1 |32012 x 1
Front Cover Seals	6213ZZ x 2
Spindle Seals	7205 x 2
Piston O-Rings	TC30-50-10 x 2
Front Cover O-Rings	TC150-180-14 x 1
Front Cover O-Rings	G120 x 1 / G150 x 1
Feeding Ball Screw	TC90-110-12 x 1
Lateral Ball Screw	P150 x 2
Ball Screw Block Bearings	Ø32 x 5 x C5
Ball Screw Block Seals	TC30-50-10 x 2
Facing Head Bearings	TC150-180-14 x 1
Facing Head Seals	G120 x 1 / G150 x 1
Single Slide Facing Head	TC90-110-12 x 1
Slide Stroke	P150 x 2

** Roundness ≤ 0.003 mm.
*** Slider Self-Repeatability ≤ 0.005 mm.
**** All dimensions are given in millimeters.

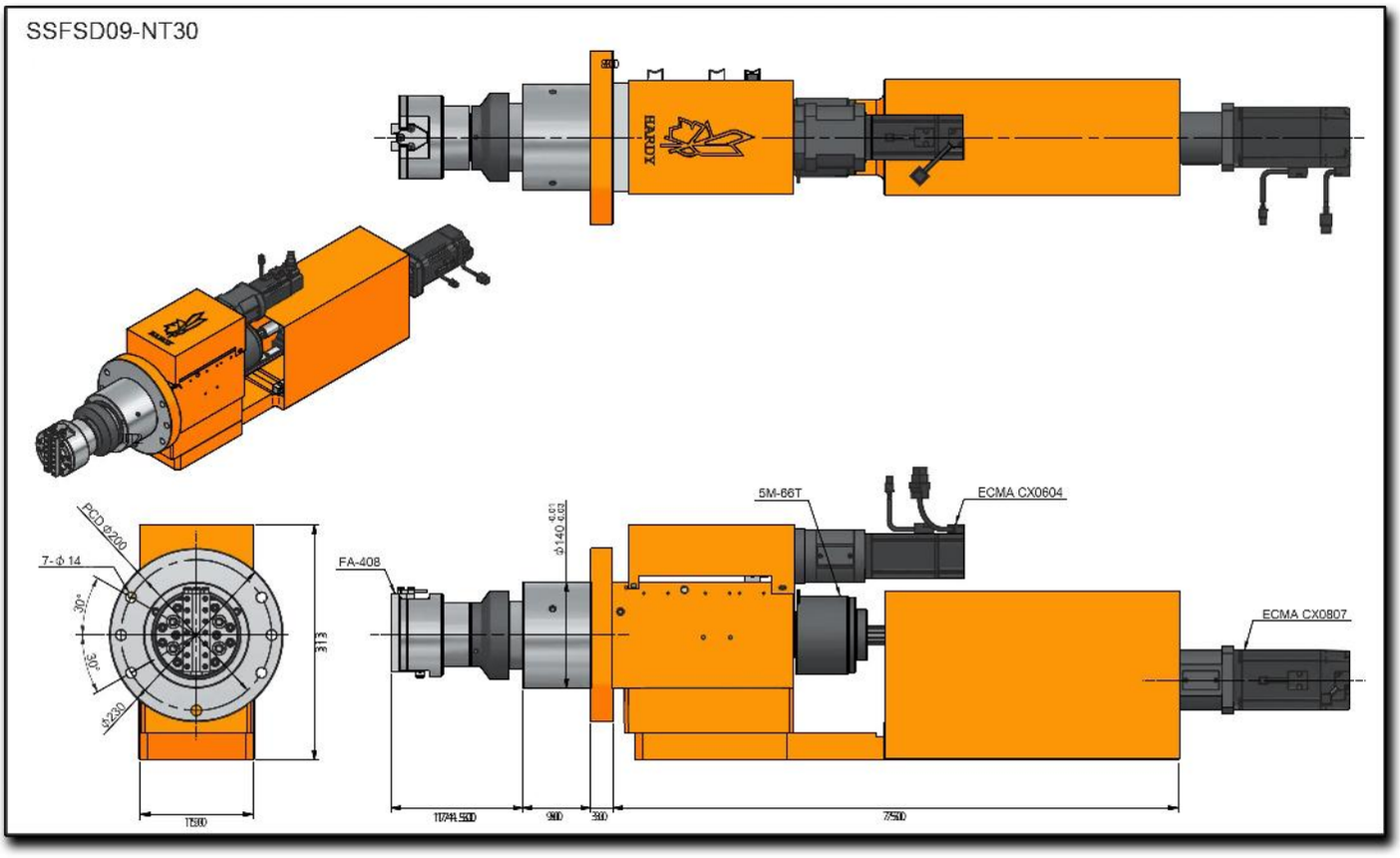
SSFSD09-NT30
ERDY
PCD ø200
7- ϕ 14
30°
30°
ϕ230
313
1500
FA-408
ϕ140 6.01 6.03
5M-66T
ECMA CX0604
ECMA CX0807
11744.5500
900
380
7500

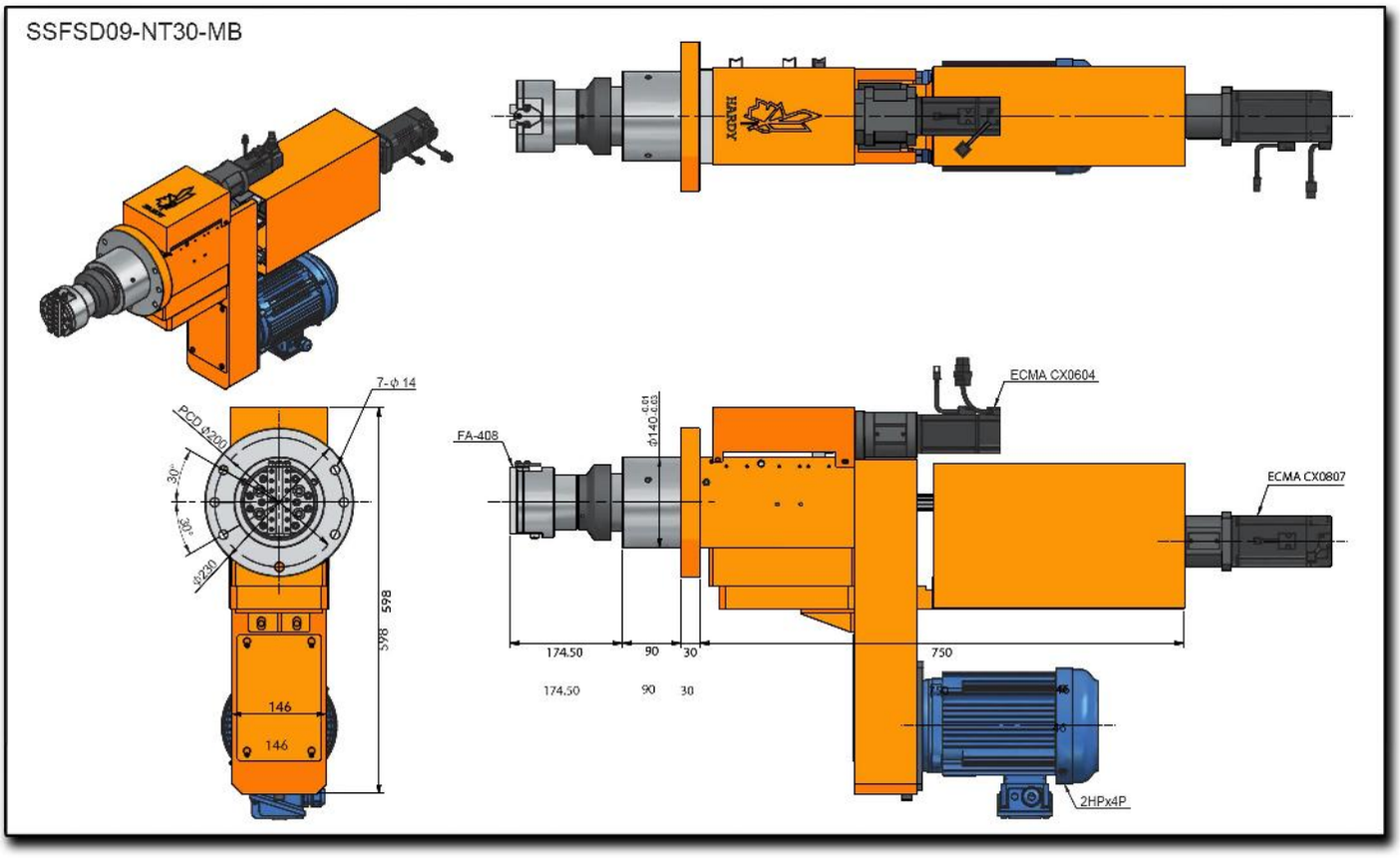
SSFSD09-NT30-MB
HARDY
7-ϕ 14
PCD ϕ200
30°
30°
ϕ230
598
598
146
146
FA-408
ϕ140
ECMA CX0604
ECMA CX0807
174.50
90
30
750
174.50
90
30
2HPx4P

SSFSD11-120M-FB45

Servo Facing Spindle Head Flange Type

Patent No. ***M510810***
Patent SIPO No. ***201520726205.6***

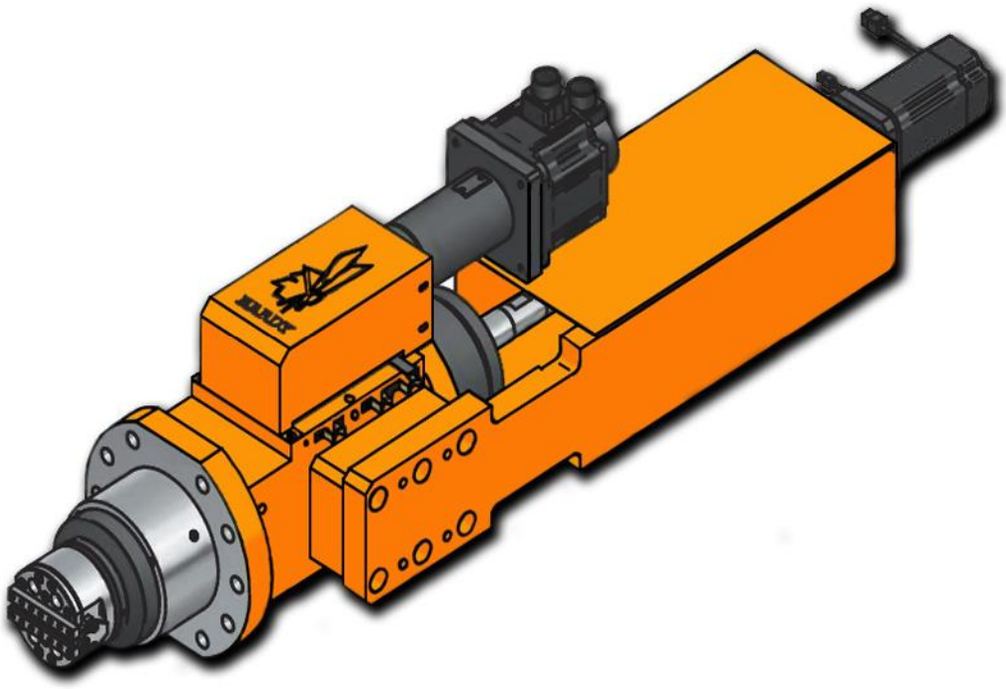

Characteristics & Dimensions

MODEL	SSFSD11-120M-FB45
Maximum Stroke	*120.00 mm*
Maximum Speed (r.p.m.)	*1600*
Electric Power Maximum Power	*3 H.P. x 4P*
Spindle Pulley	*8M-64T*
Spindle Bearings	*6210ZZ x 2 | 30210 x 2*
Pulley Bearings	*6015ZZ x 2*
Front Cover Seals	*TC110-130-13 x 1*
Spindle Seals	*TC75-90-12 x 1*
Piston O-Rings	*P110 x 2*
Front Cover O-Rings	*G85 x 1 | G110 x 1*
Front Cover O-Rings	*Ø25 x 5 x C5*
Feeding Ball Screw	*Ø20 x 20 x C5*
Lateral Ball Screw	*7203 x 4*
Ball Screw Block Bearings	*TC24-40-8 x 2 | TC24-38-8 x 2*
Ball Screw Block Seals	*7207 x 2 | TC24-38-8- x 2*
Facing Head Bearings	*7207 x 2 | 7203 x 2*
Facing Head Seals	*TC45-70-8 x 1 | TC24-40-8 x 1 | TC24-38-8 x 1*
Single Slide Facing Head	*FA-408*
Slide Stroke	*8 mm.*

*** Roundness* ***≤ 0.003 mm.***
**** Slider Self-Repeatability* ***≤ 0.005 mm.***
***** All dimensions are given in millimeters.*

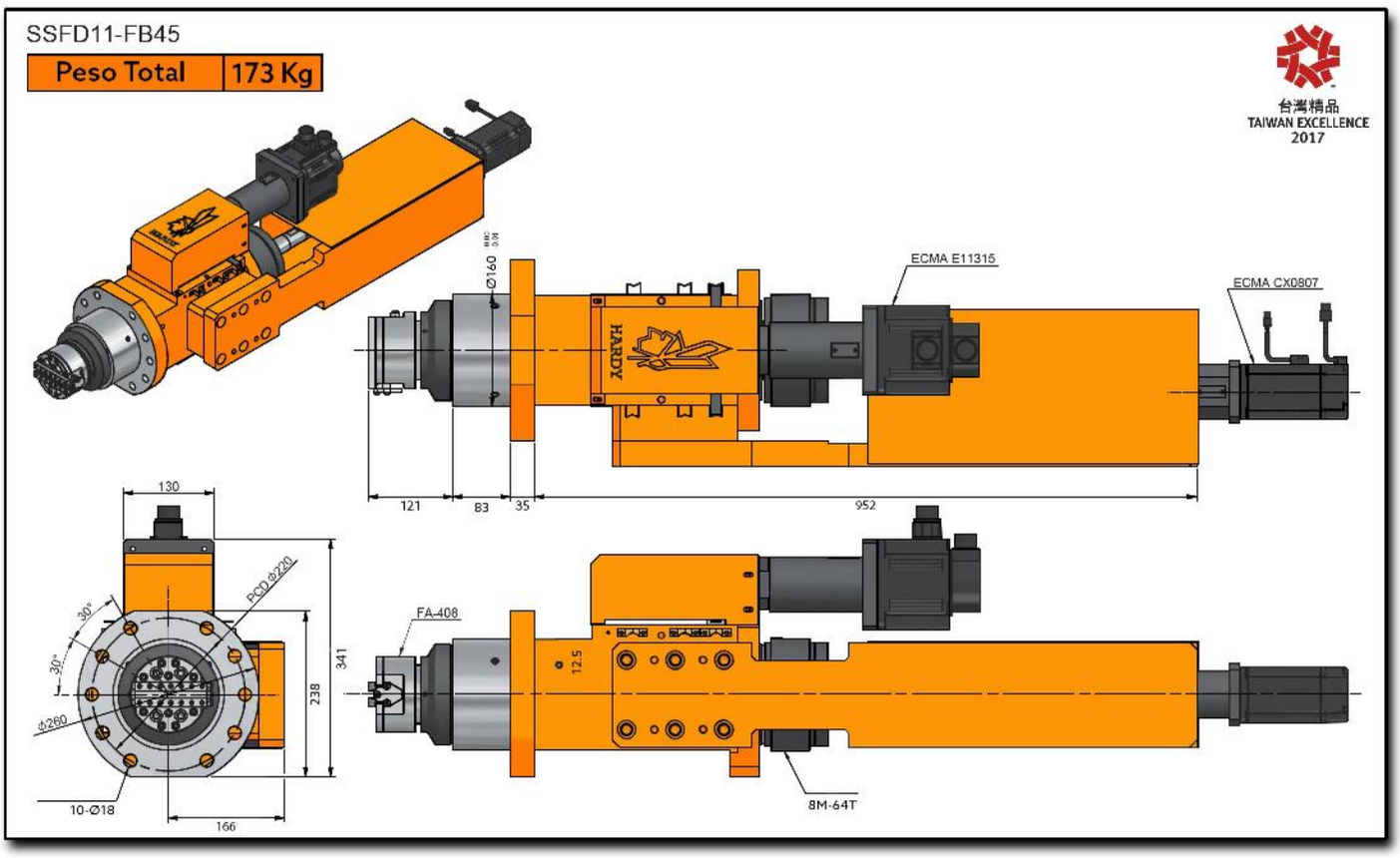
SSFD11-FB45
Peso Total
173 Kg
台灣精品
TAIWAN EXCELLENCE
2017
ECMA E11315
ECMA CX0807
Ø160
HARDY
121
83
35
952
130
PCD Ø220
30°
30°
Ø260
10-Ø18
166
238
341
FA-408
12.5
8M-64T

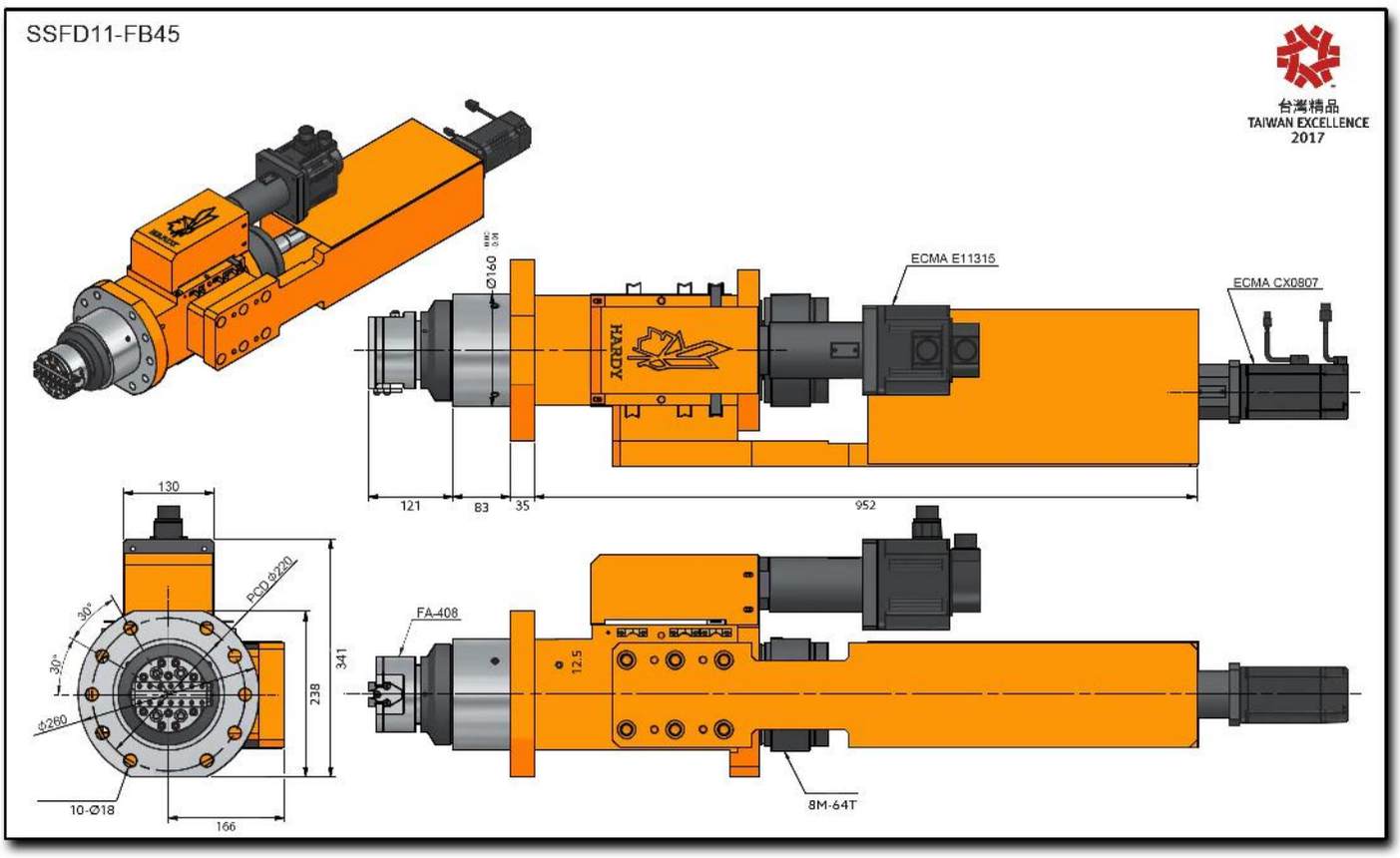
SSFD11-FB45
台灣精品
TAIWAN EXCELLENCE
2017
ECMA E11315
ECMA CX0807
Ø160
HARDY
121
83
35
952
130
PCD Ø220
30°
30°
Ø260
10-Ø18
166
238
341
FA-408
12.5
8M-64T

SSFSD12-150M-NT40

Servo Facing Spindle Head Flange Type

Patent No. ***M510810***
Patent SIPO No. ***201520726205.6***

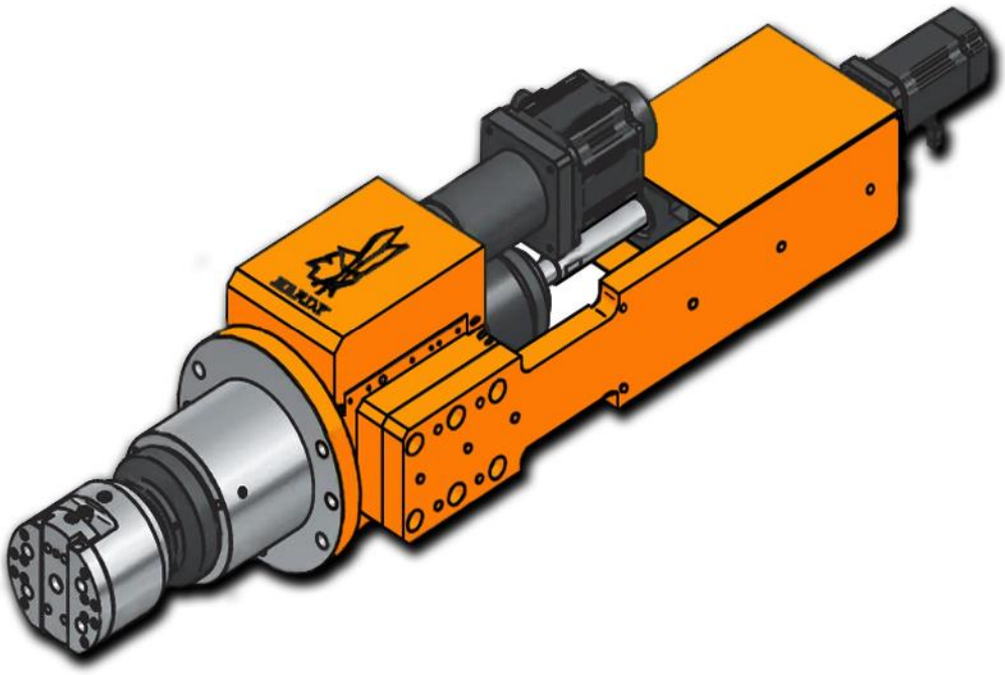

Characteristics & Dimensions

MODEL	SSFSD12-150M-NT40
Maximum Stroke	*150.00 mm*
Maximum Speed (r.p.m.)	*1200*
Electric Power Maximum Power	*3 H.P. x 4P*
Spindle Pulley	*8M-54T*
Spindle Bearings	*6011Z x 1 | 6009Z x 1* *32011 x 1 | 32009 x 1*
Pulley Bearings	*6211ZZ x 2*
Front Cover Seals	*TC120-145-12 x 1*
Spindle Seals	*TC75-90-12 x 1*
Piston O-Rings	*P120 x 2*
Front Cover O-Rings	*G85 x 1 | G120 x 1*
Feeding Ball Screw	*Ø25 x 5 x C5*
Lateral Ball Screw	*Ø20 x 5 x C5*
Ball Screw Block Bearings	*7204 x 2 | 7203 x 2*
Ball Screw Block Seals	*TC24-42-8 x 1 | TC26-42-8 x 1* *TC20-40-8 x 1 | TC24-38-8 x 1*
Facing Head Bearings	*7207 x 2 | 7203 x 2*
Facing Head Seals	*TC45-70-8 x 1* *TC24-40-8 x 1 1 TC24-38-8 x 1*
Single Slide Facing Head	*FA-610*
Lateral Slide Stroke	*10 mm.*

*** Roundness* ***≤ 0.003 mm.***
**** Slider Self-Repeatability* ***≤ 0.005 mm.***
***** All dimensions are given in millimeters.*

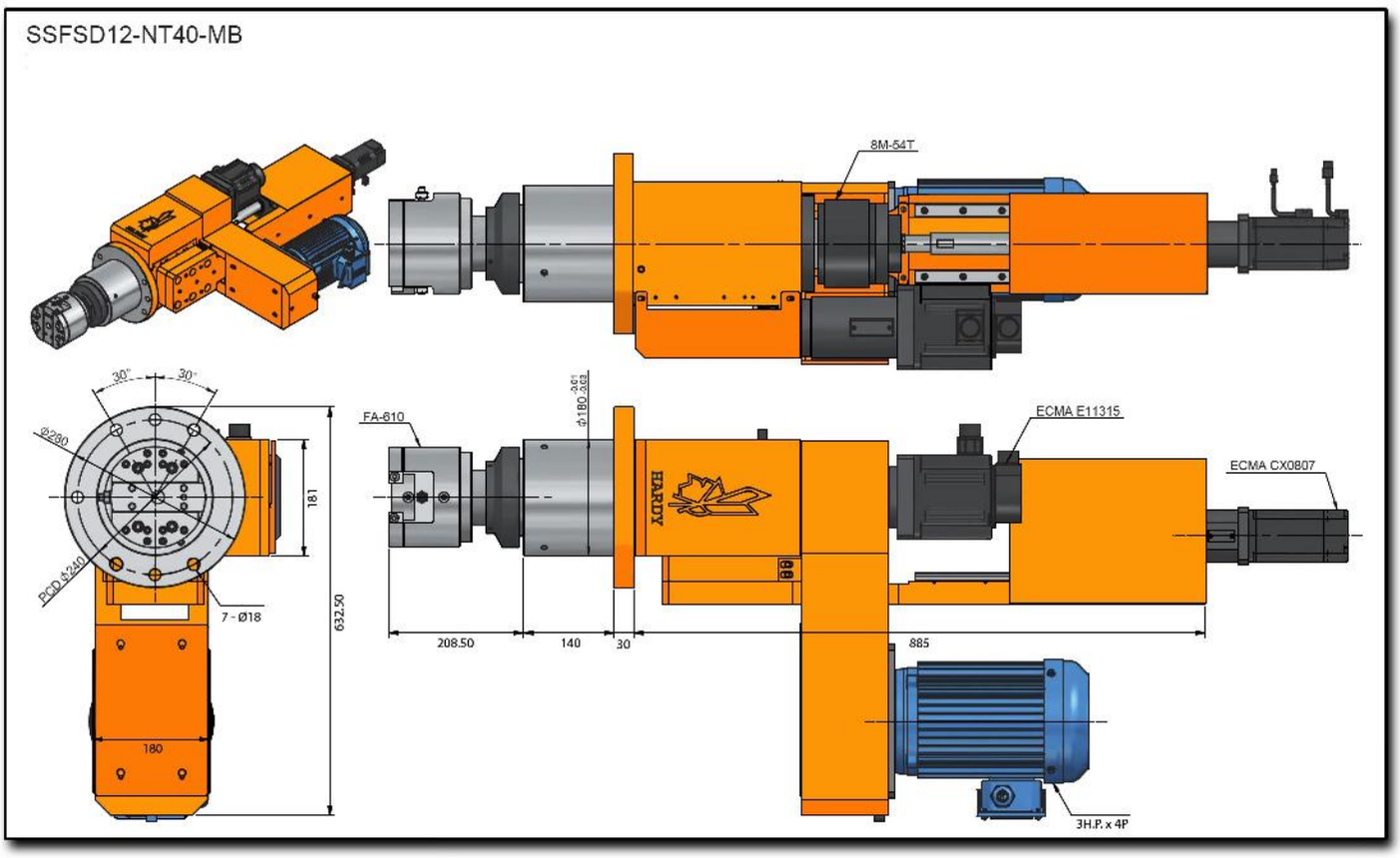
SSFSD12-NT40-MB
8M-54T
30°
30°
Ø280
181
PCD 240
7 - Ø18
632.50
180
FA-610
ECMA E11315
ECMA CX0807
HARDY
208.50
140
30
885
3H.P. x 4P

SSFSD12-NT40

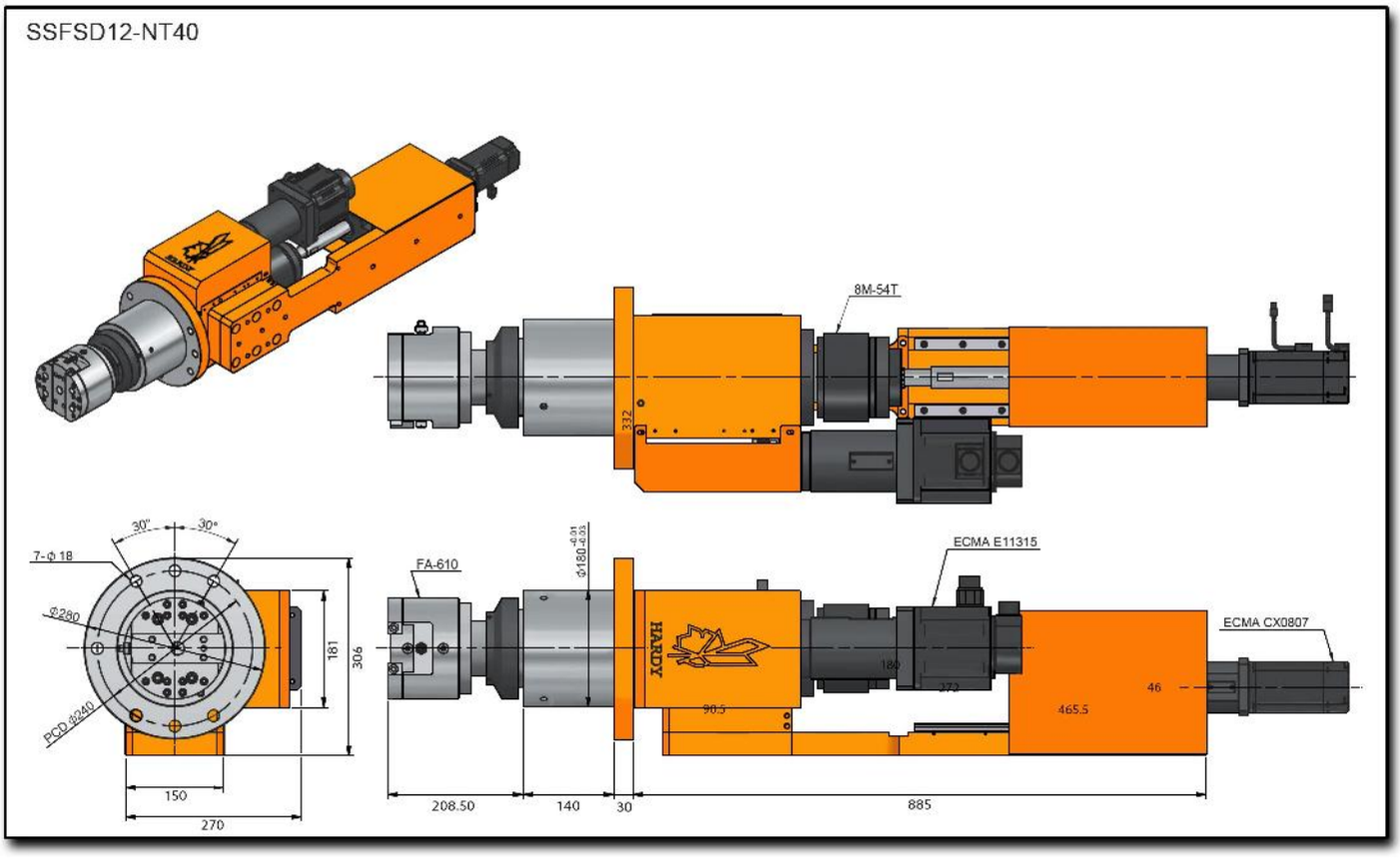

SSFSD15-150M-FB45

Servo Facing Spindle Head Flange Type

Patent No. ***M510810***
Patent SIPO No. ***201520726205.6***

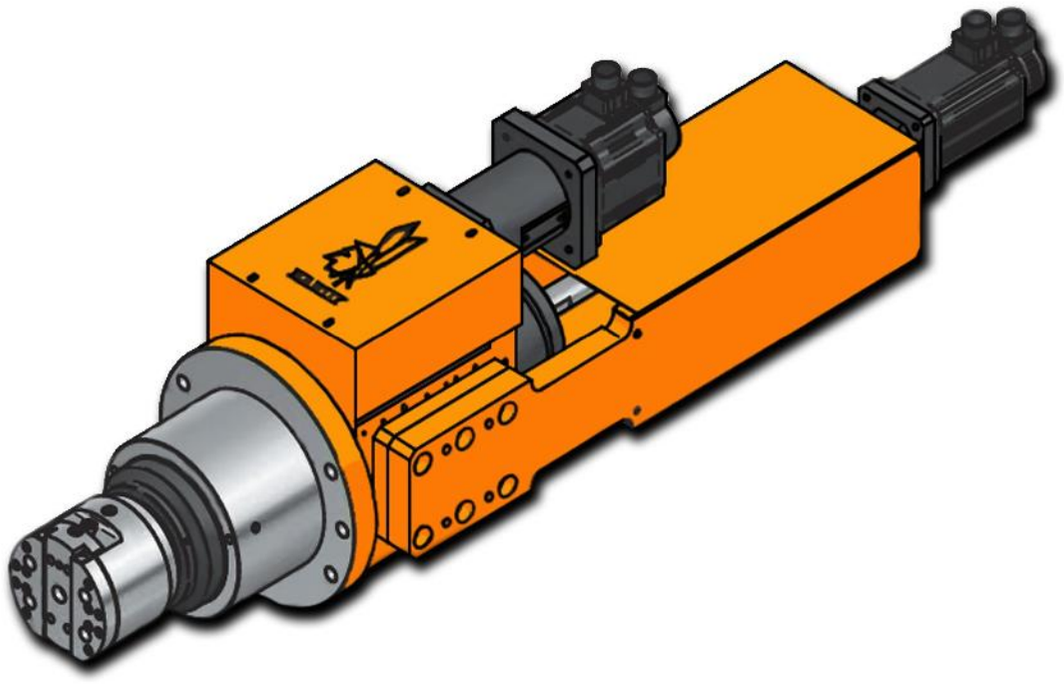

Characteristics & Dimensions

MODEL	SSFSD15-150M-NT40
Maximum Stroke	*150.00 mm*
Maximum Speed (r.p.m.)	*1200*
Electric Power Maximum Power	*5.00 H.P. x 4P*
Spindle Pulley	*8M-62T*
Spindle Bearings	*6014Z x 1 | 6012Z x 1* *32014 x 1 | 32012 x 1*
Pulley Bearings	*6213ZZ x 2*
Front Cover Seals	*TC150-180-14 x 1*
Spindle Seals	*TC90-110-12 x 1*
Piston O-Rings	*P150 x 2*
Front Cover O-Rings	*G120 x 1 | G150 x 1*
Feeding Ball Screw	*Ø32 x 5 x C5*
Lateral Ball Screw	*Ø20 x 5 x C5*
Ball Screw Block Bearings	*7205 x 2 | 7203 x 2*
Ball Screw Block Seals	*TC30-50-10 x 2* *TC20-40-8 x 1 | TC24-38-8 x 1*
Facing Head Bearings	*7207 x 2 | 7203 x 2*
Facing Head Seals	*TC45-70-8 x 1* *TC24-40-8 x 1 1 TC24-38-8 x 1*
Single Slide Facing Head	*FA-610*
Lateral Slide Stroke	*10 mm.*

*** Roundness* ***≤ 0.003 mm.***
**** Slider Self-Repeatability* ***≤ 0.005 mm.***
***** All dimensions are given in millimeters.*

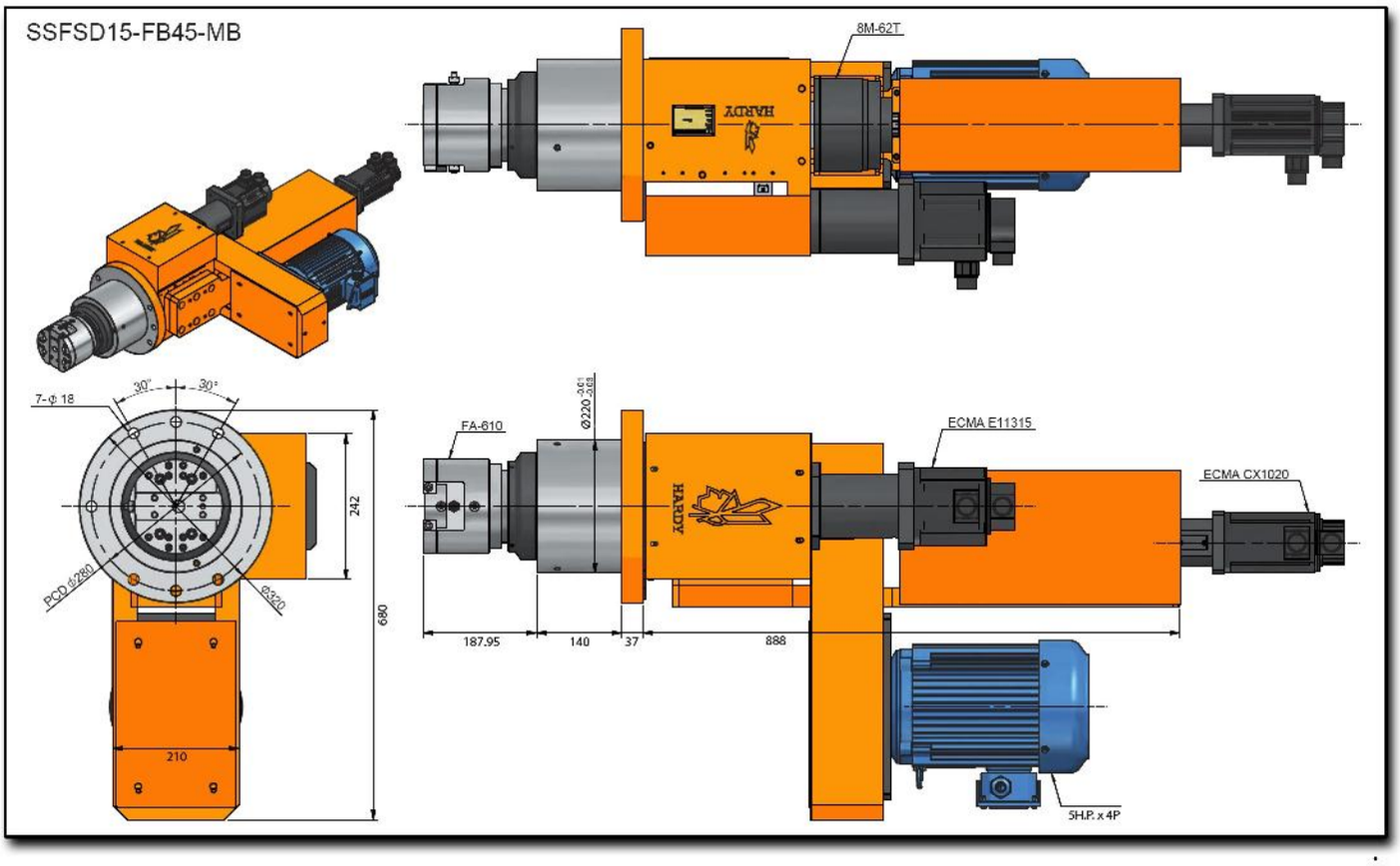
SSFSD15-FB45-MB
8M-62T
HARDY
7-φ 18
30°
30°
242
PCD φ280
φ320
680
210
FA-610
Ø220 -0.01 -0.03
ECMA E11315
ECMA CX1020
HARDY
187.95
140
37
888
5H.P. x 4P

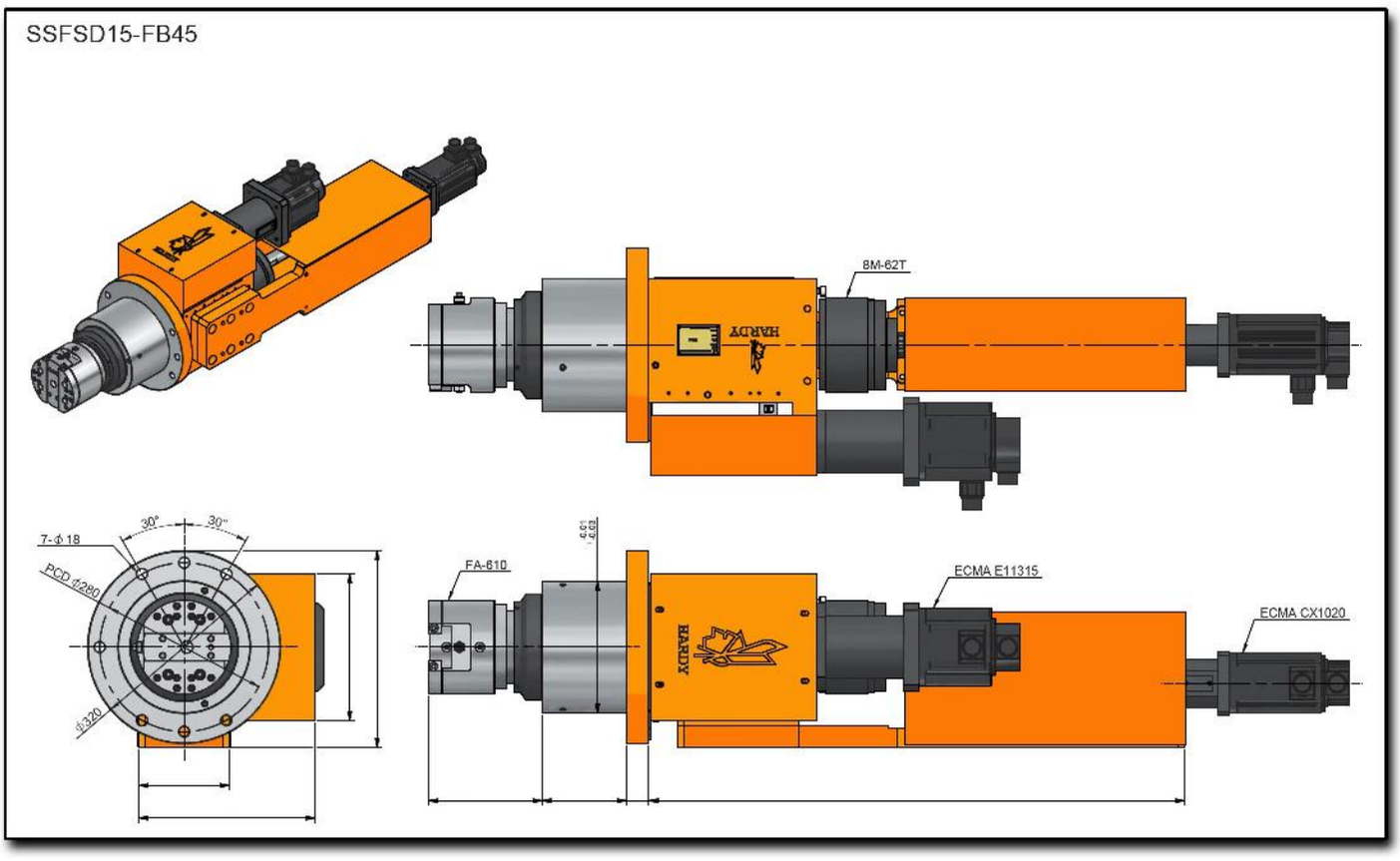
SSFSD15-FB45
BM-62T
HARDY
7-Φ 18
30°
30°
PCD Φ280
Φ320
FA-610
ECMA E11315
ECMA CX1020
HARDY

S - SR FACING SERIES

FACING SPINDLES

S60-A_2-4 FA-408

Servo Facing Spindle Head Square Housing Device

(With Single Slide Head)

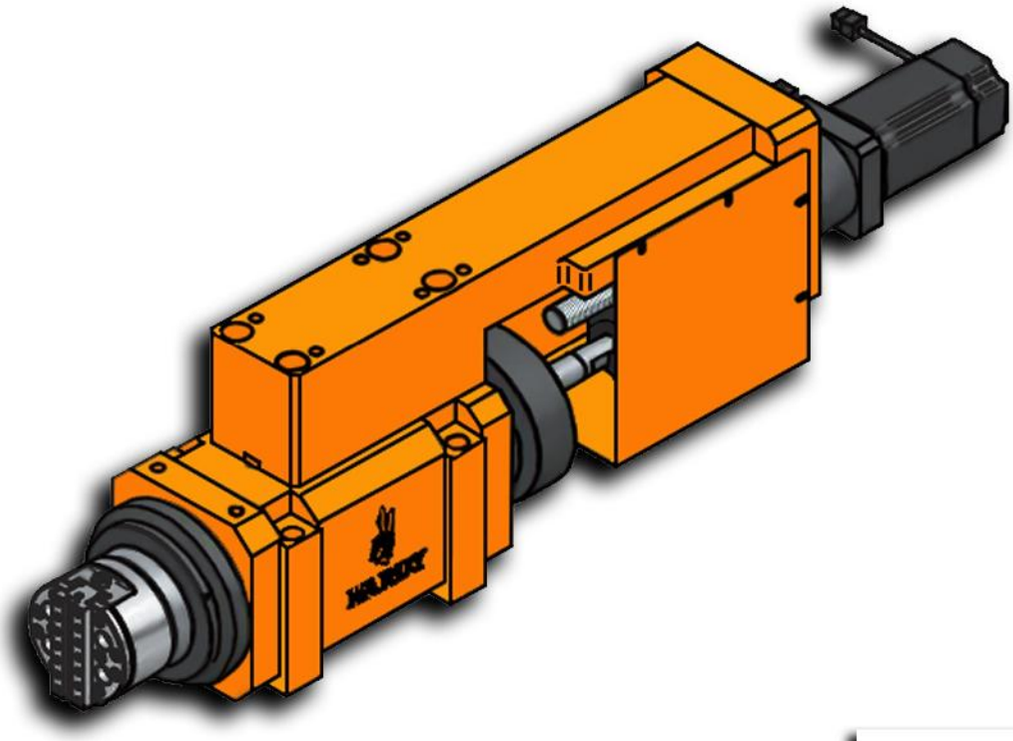

台灣精品 2017
TAIWAN EXCELLENCE

Characteristics & Dimensions

MODEL	S60-A_2-4
Maximum Speed *(r.p.m.)*	*1,200*
Maximum Horsepower *(3 Phases)*	*2 H.p. x 4*
Spindle Pulley	*8M - 60T*
Spindle Bearings	*32211 x 1 / 6211Z x 1* *32212 x 1 / 6212Z x 1*
Ball Screw Bearing Block Bearings	*7204 x 2*
Ball Screw Bearing Block Seals	*TC26 - 42 - 8 x 2*
Facing Head Bearings	*7204 x 4*
Single-Slide Facing Head Model	*FA - 408*
Facing Head Slider Stroke	*8.00 mm.*

*** Roundness* ***≤ 0.003 mm.***
**** Slider Self-Repeatability* ***≤ 0.005 mm.***
***** All dimensions are given in millimeters.*

S60-A_2-4 FA-408

台灣精品2017
TAIWAN EXCELLENCE



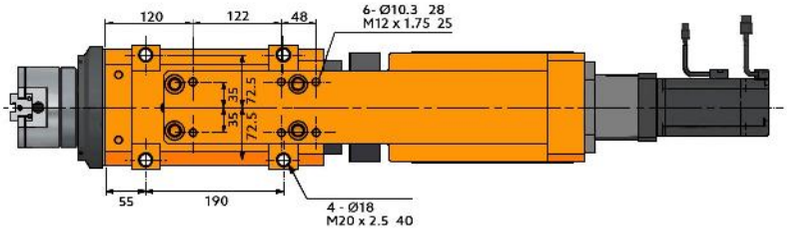

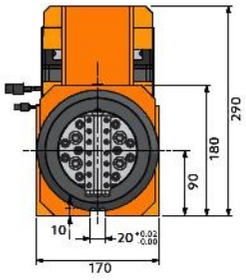

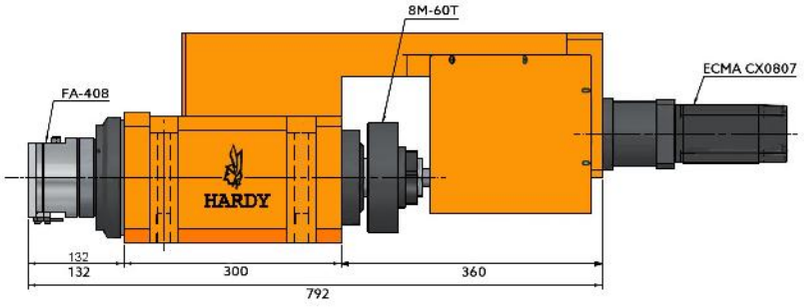

S60-A_2-4 FA-408

台灣精品2017
TAIWAN EXCELLENCE

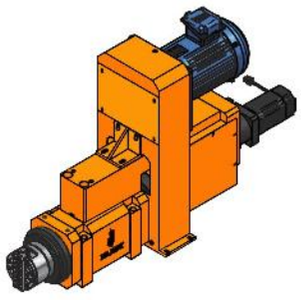

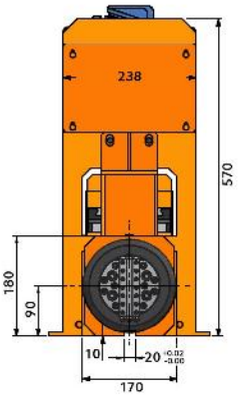

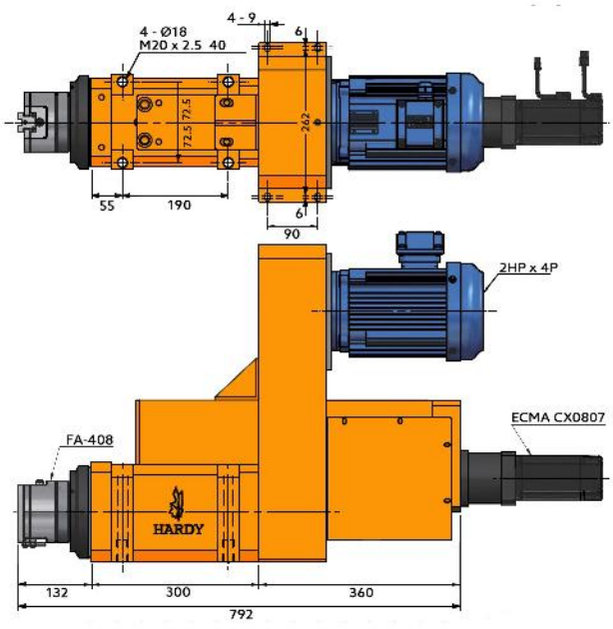

S60-A_2-4 FA-610

Servo Facing Spindle Head Square Housing Device

(With Single Slide Head)

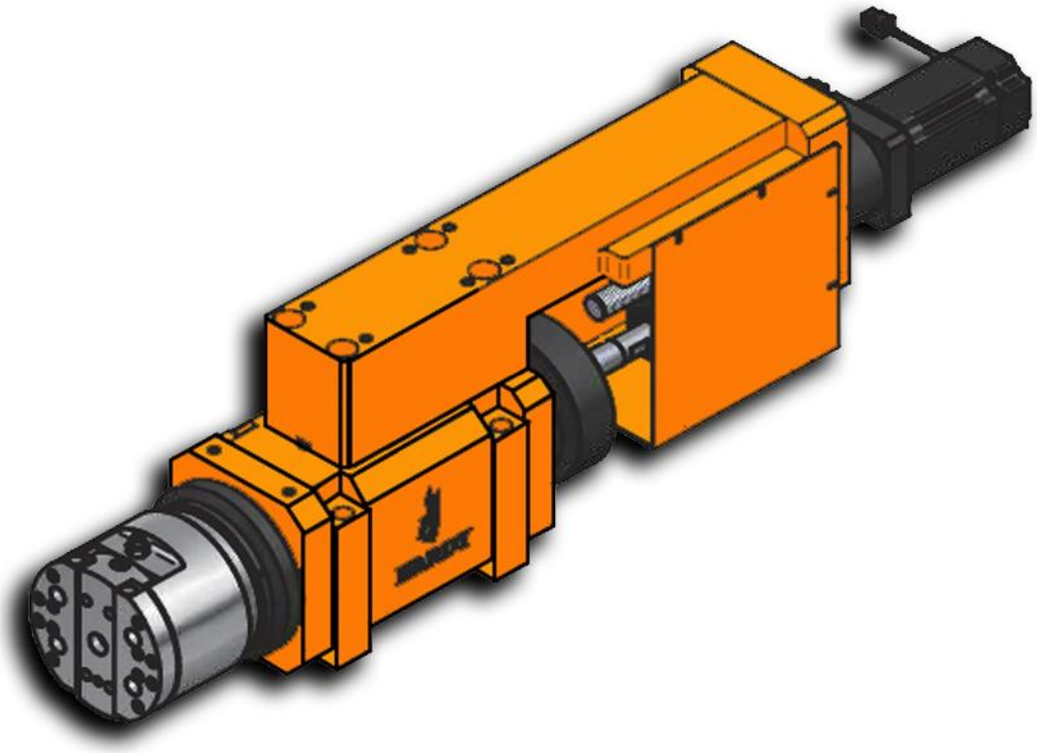

台灣精品 2017
TAIWAN EXCELLENCE

Characteristics & Dimensions

MODEL	S60-A_2-4
Maximum Speed (r.p.m.)	*1,200*
Maximum Horsepower (3 Phases)	*2 H.p. x 4*
Spindle Pulley	*8M - 60T*
Spindle Bearings	*32211 x 1 / 6211Z x 1* *32212 x 1 / 6212Z x 1*
Ball Screw Bearing Block Bearings	*7204 x 2*
Ball Screw Bearing Block Seals	*TC26 - 42 - 8 x 2*
Facing Head Bearings	*7204 x 4*
Single-Slide Facing Head Model	*FA - 610*
Facing Head Slider Stroke	*10.00 mm.*

*** Roundness* ***≤ 0.003 mm.***
**** Slider Self-Repeatability* ***≤ 0.005 mm.***
***** All dimensions are given in millimeters.*

台灣精品 2017
TAIWAN EXCELLENCE



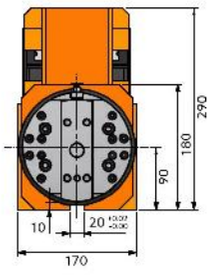

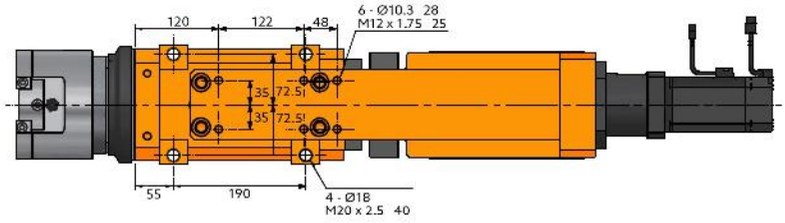

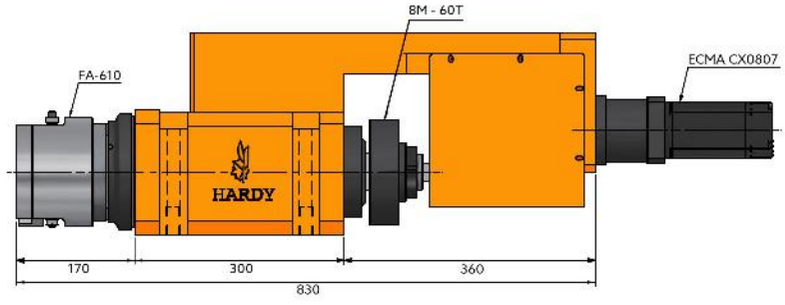

S60-A_2-4-FA-610-MB

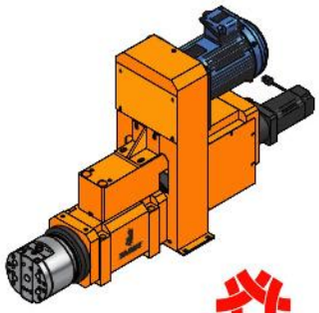

台灣精品2017
TAIWAN EXCELLENCE

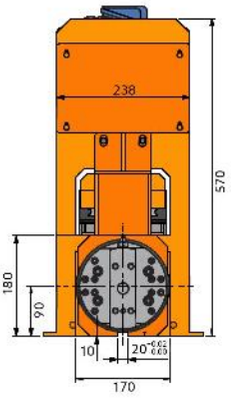

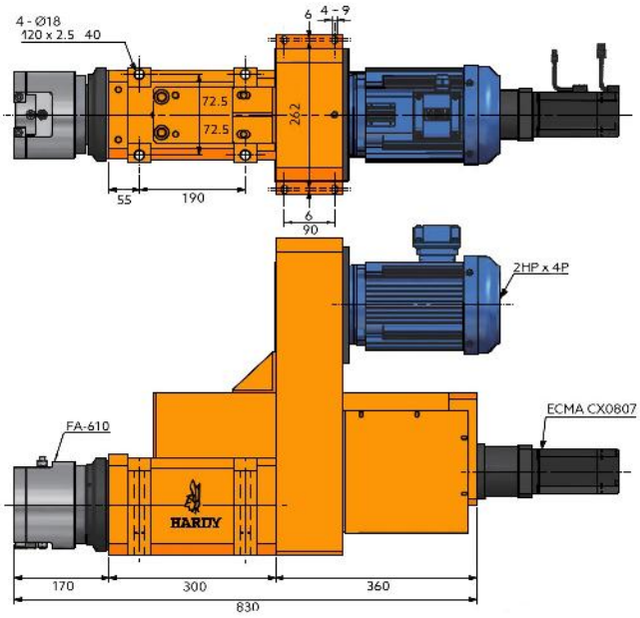

S80-A_2-5 FA-812

Servo Facing Spindle Head Square Housing Device

(With Single Slide Head)

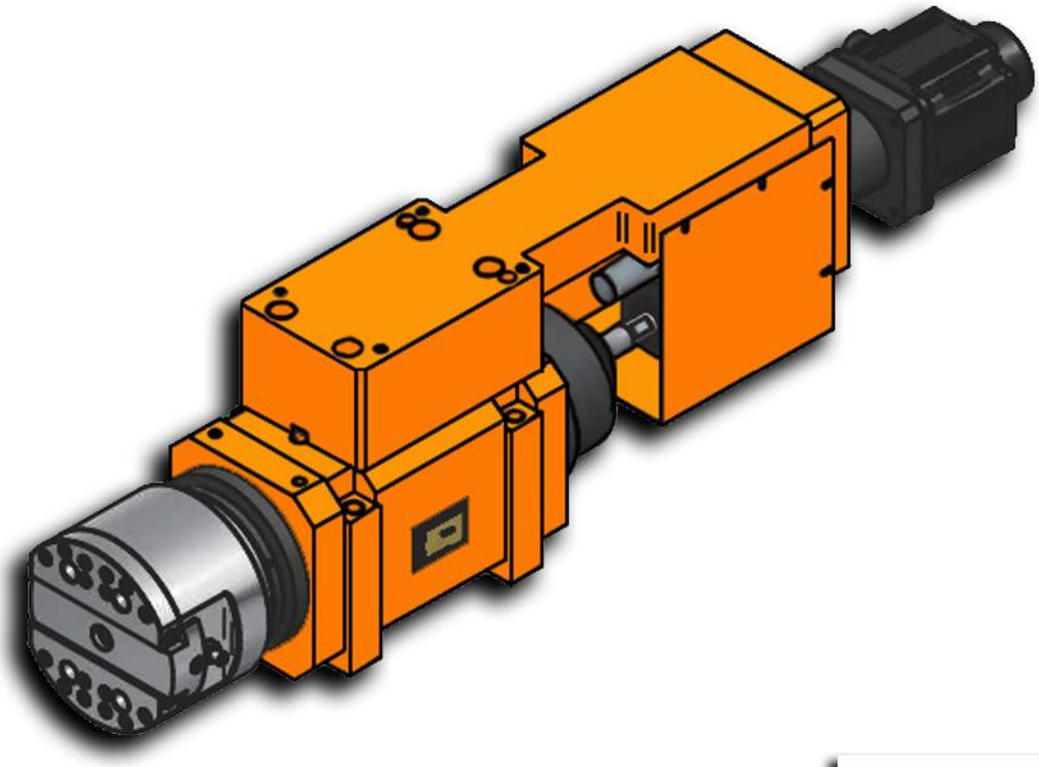

台灣精品 2017
TAIWAN EXCELLENCE

Characteristics & Dimensions

MODEL	S80H-A_2-5
Maximum Speed (r.p.m.)	*2,500*
Maximum Horsepower (3 Phases)	*3 H.p. x 4*
Spindle Pulley	*8M - 60T*
Spindle Bearings	*7216 x 4*
Ball Screw Bearing Block Bearings	*7205 x 2*
Ball Screw Bearing Block Seals	*TC30-50-10 x 2*
Facing Head Bearings	*7204 x 4*
Single-Slide Facing Head Model	*FA-812*
Facing Head Slider Stroke	*12 mm.*

*** Roundness* ***≤ 0.003 mm.***
**** Slider Self-Repeatability* ***≤ 0.005 mm.***
***** All dimensions are given in millimeters.*

S80-A_2-5 FA-812

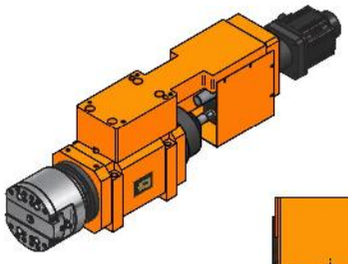

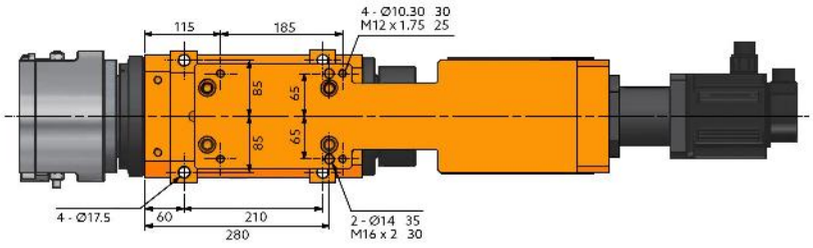

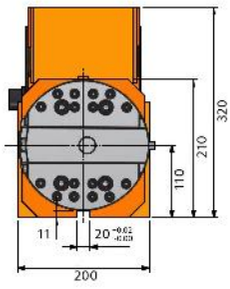

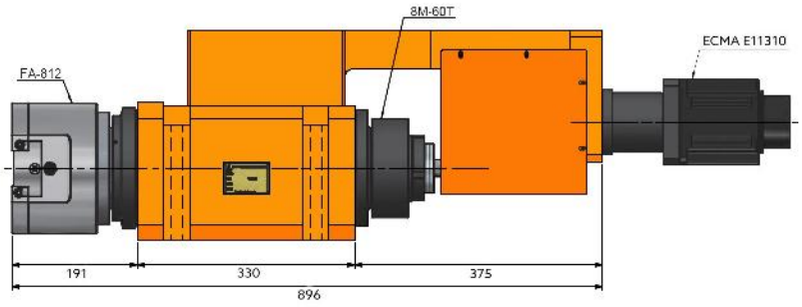

S80-A_2-5 FA-812-MB

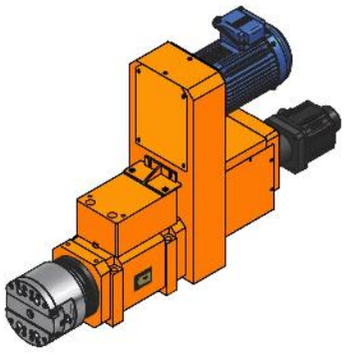

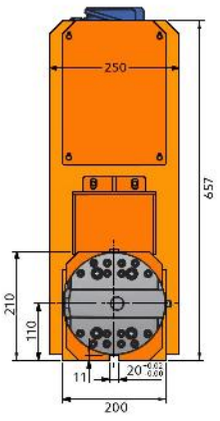

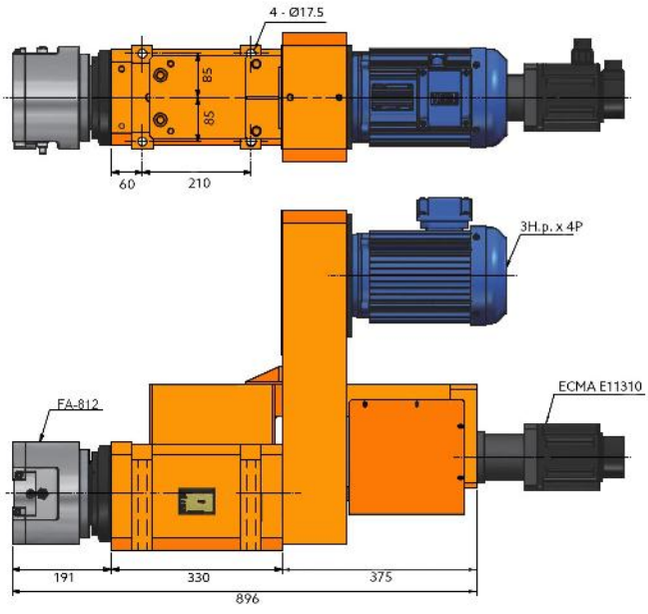

S80-A_2-5 FA-830

High Performance Servo Facing Spindle Head Square Housing Device

(With Single Slide Head)

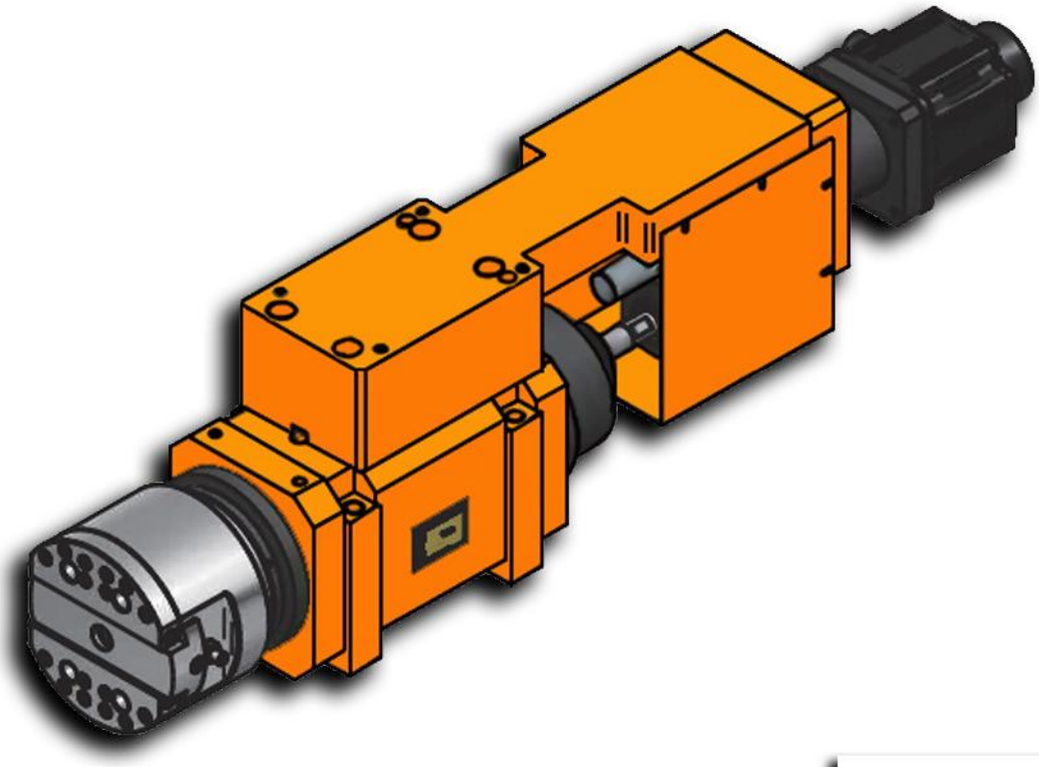

台灣精品 2017
TAIWAN EXCELLENCE

Characteristics & Dimensions

MODEL	S80-A_2-5
Maximum Speed (r.p.m.)	*1,200*
Maximum Horsepower (3 Phases)	*3 H.p. x 4*
Spindle Pulley	*8M - 60T*
Spindle Bearings	*32216 x 2 / 6216 x 2*
Ball Screw Bearing Block Bearings	*7205 x 2*
Ball Screw Bearing Block Seals	*TC30-50-10 x 2*
Facing Head Bearings	*7204 x 4*
Single-Slide Facing Head Model	*FA-830*
Facing Head Slider Stroke	*30 mm.*

*** Roundness* ***≤ 0.003 mm.***
**** Slider Self-Repeatability* ***≤ 0.005 mm.***
***** All dimensions are given in millimeters.*

S80-A_2-5 FA-830

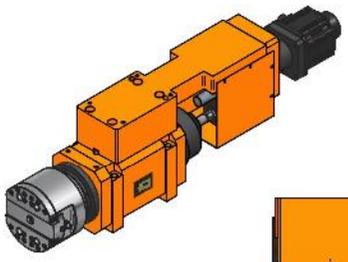

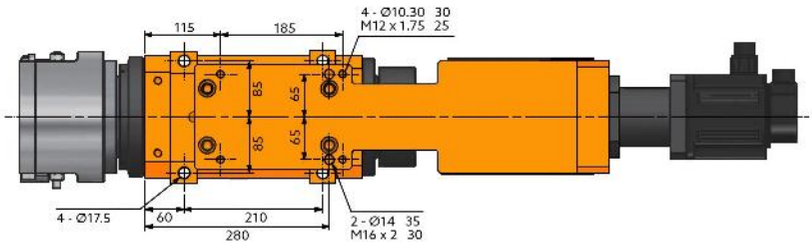

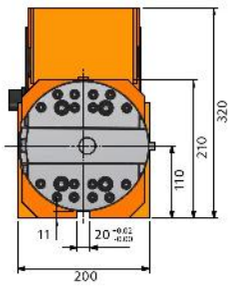

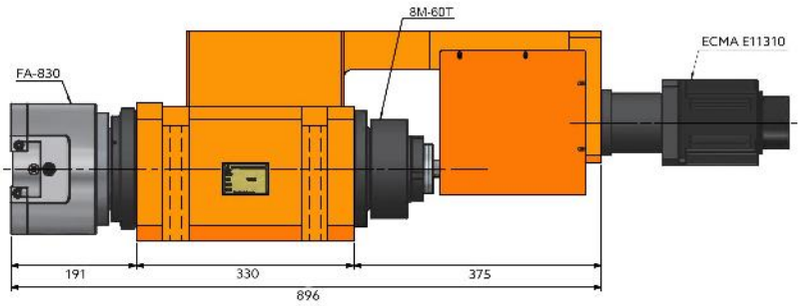

S80-A_2-5 FA-830-MB

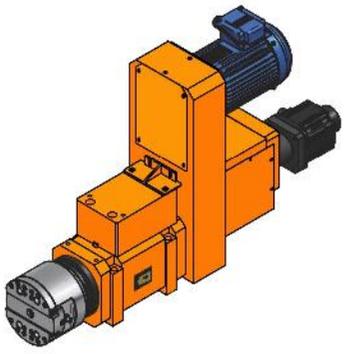

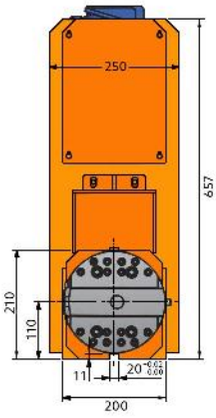

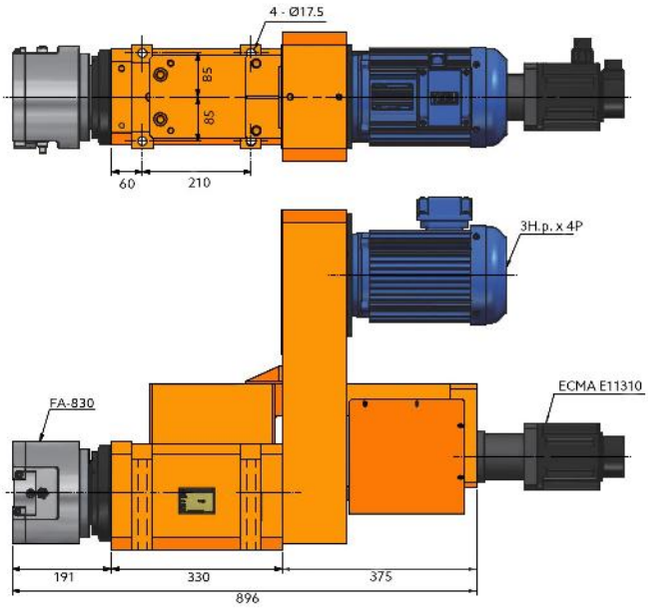

S80-A_2-5 FD-880

Servo Facing Spindle Head Square Housing Device

(With Double Slide Head)

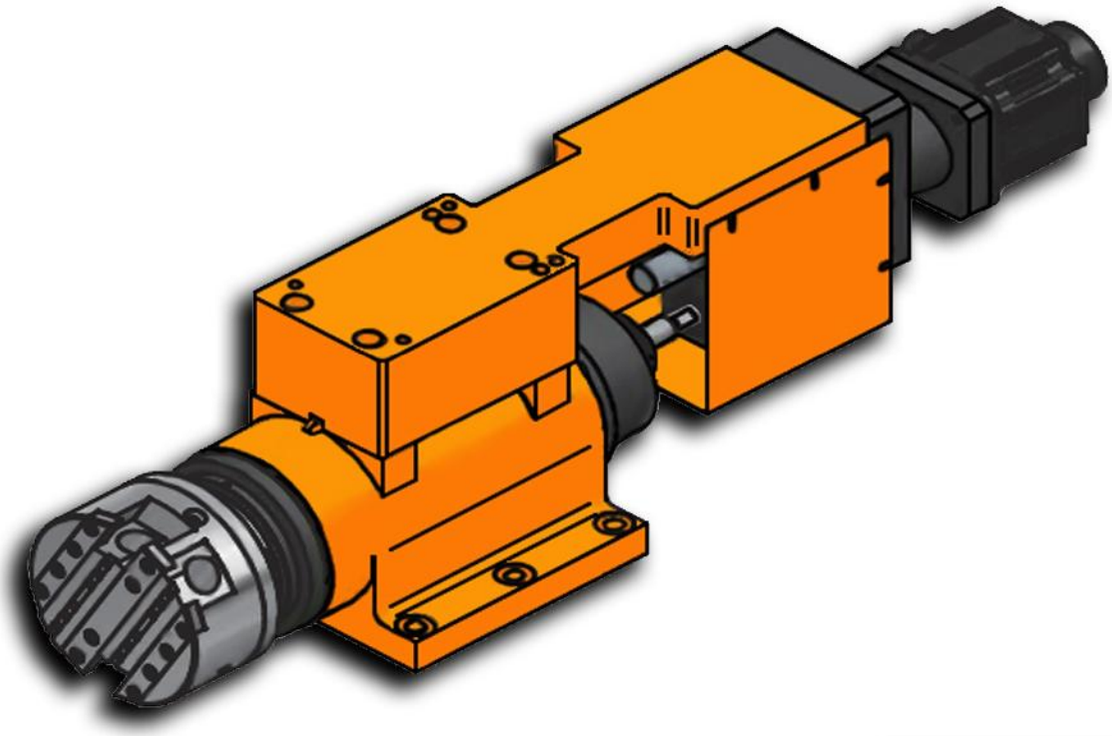

台灣精品 2017
TAIWAN EXCELLENCE

Characteristics & Dimensions

MODEL	S80-A_2-5
Maximum Speed (r.p.m.)	*1,200*
Maximum Horsepower (3 Phases)	*3 H.p. x 4*
Spindle Pulley	*8M - 60T*
Spindle Bearings	*32216 x 2 / 6216 x 2*
Ball Screw Bearing Block Bearings	*7205 x 2*
Ball Screw Bearing Block Seals	*TC30-50-10 x 2*
Facing Head Bearings	*7204 x 4*
Single-Slide Facing Head Model	*FD-880*
Facing Head Slider Stroke	*80 mm.*

*** Roundness* ***≤ 0.003 mm.***
**** Slider Self-Repeatability* ***≤ 0.005 mm.***
***** All dimensions are given in millimeters.*

S80-A_2-5 FD-880-MB

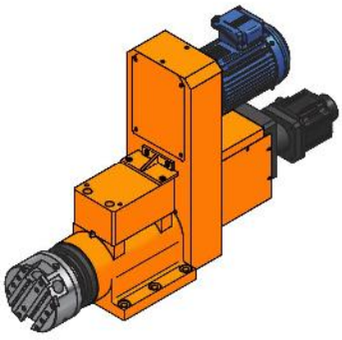

台灣精品2017
TAIWAN EXCELLENCE

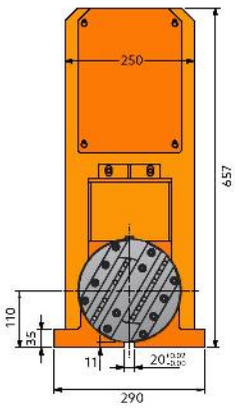

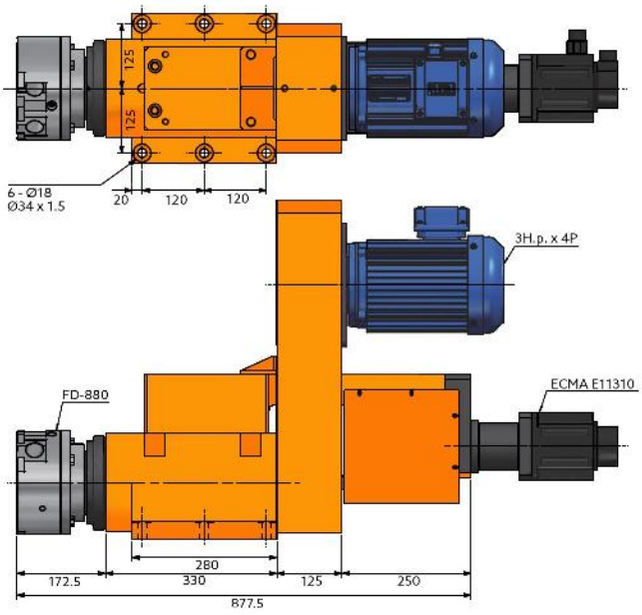

S80-A_2-5 FD-880

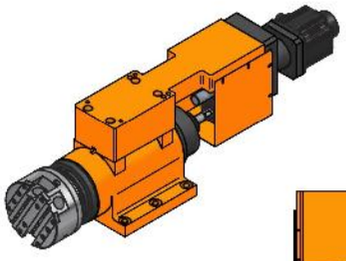

台灣精品 2017
TAIWAN EXCELLENCE

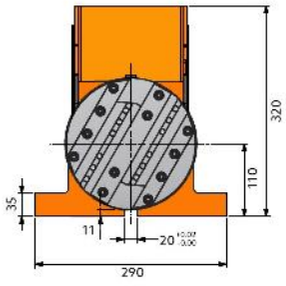

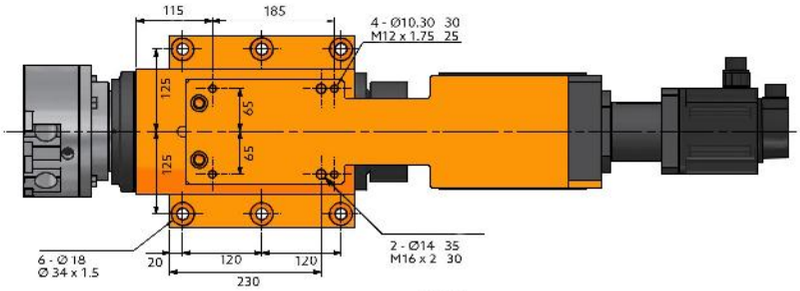

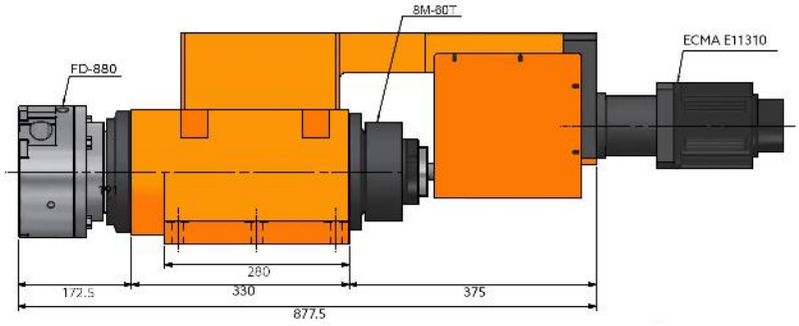

SR60-A_2-4 FA-408

Servo Facing Spindle Head Round Housing Device

(With Single Slide Head)

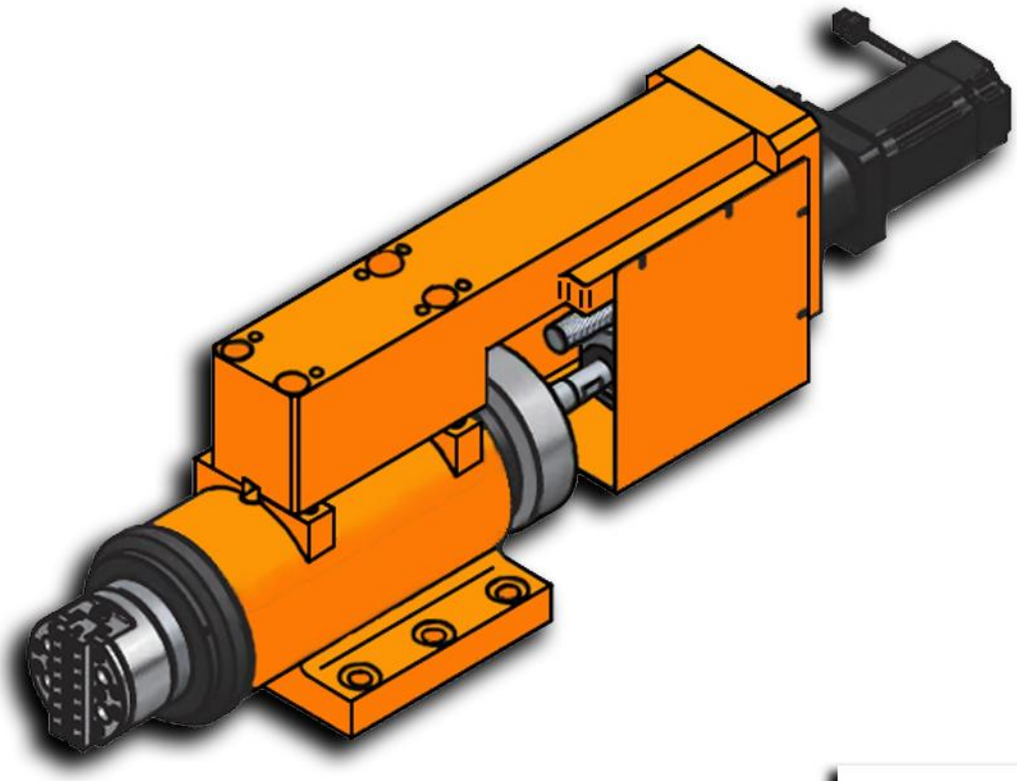

台灣精品 2017
TAIWAN EXCELLENCE

Characteristics & Dimensions

MODEL	SR60-A_2-4
Maximum Speed *(r.p.m.)*	*1,200*
Maximum Horsepower *(3 Phases)*	*2 H.p. x 4*
Spindle Pulley	*8M - 60T*
Spindle Bearings	*32211 x 1 / 6211Z x 1* *32212 x 1 / 6212Z x 1*
Ball Screw Bearing Block Bearings	*7204 x 2*
Ball Screw Bearing Block Seals	*TC26 - 42 - 8 x 2*
Facing Head Bearings	*7204 x 4*
Single-Slide Facing Head Model	*FA - 408*
Facing Head Slider Stroke	*8.00 mm.*

*** Roundness* ***≤ 0.003 mm.***
**** Slider Self-Repeatability* ***≤ 0.005 mm.***
***** All dimensions are given in millimeters.*

SR60-A_2-4 FA-408

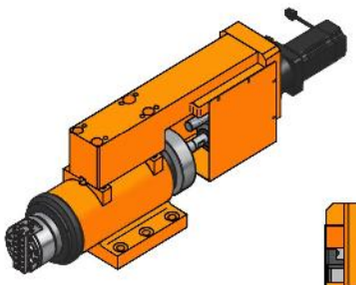

台灣精品 2017
TAIWAN EXCELLENCE

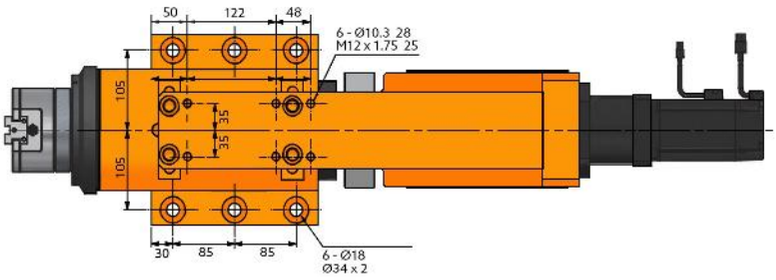

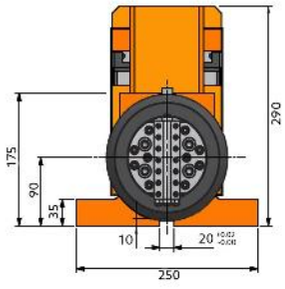

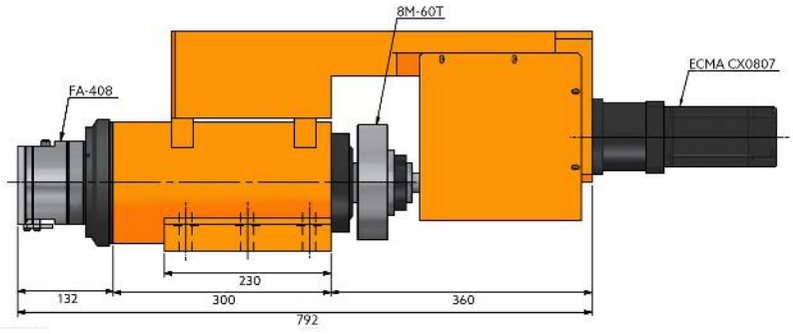

SR60-A_2-4 FA-408 MB

台灣精品 2017
TAIWAN EXCELLENCE

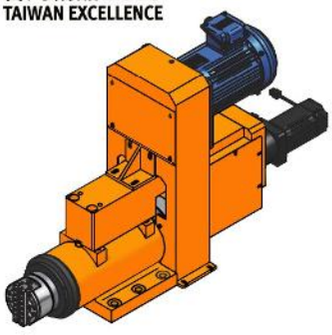

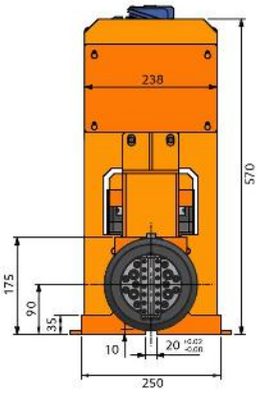

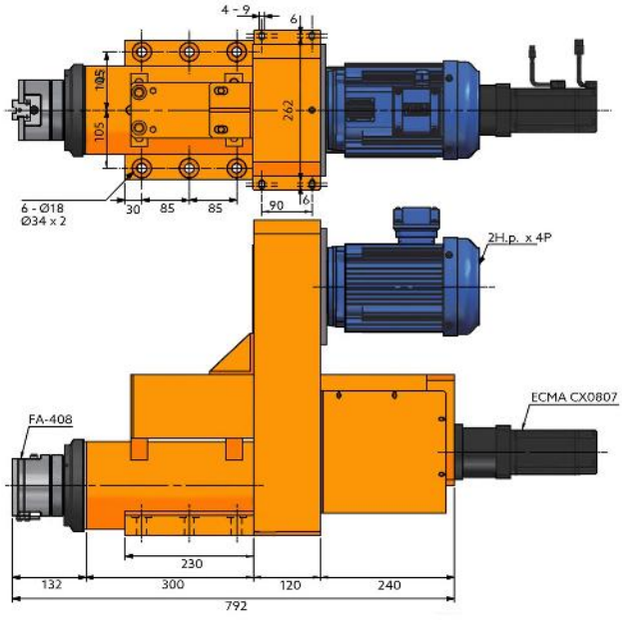

SR60-A_2-4 FA-610

Servo Facing Spindle Head Round Housing Device

(With Single Slide Head)

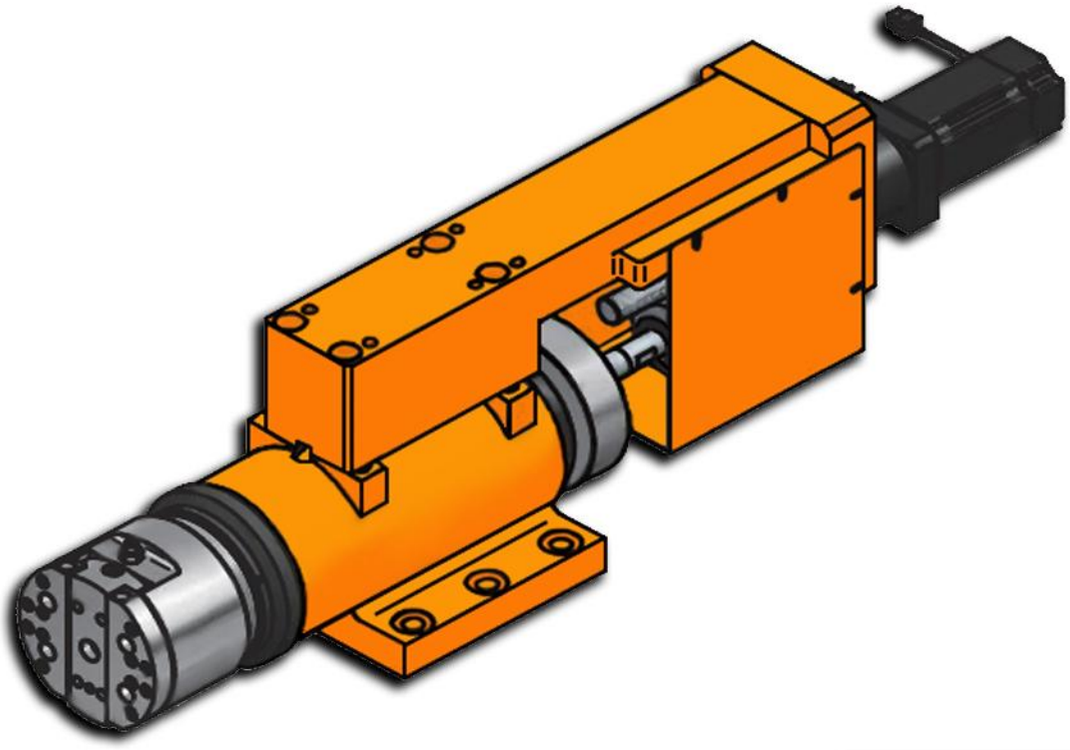

台灣精品 2017
TAIWAN EXCELLENCE

Characteristics & Dimensions

MODEL	SR60-A_2-4
Maximum Spindle Speed (r.p.m.)	*1,200*
Motor Power (3 Phases)	*2 H.p. x 4*
Spindle Pulley	*8M - 60T*
Spindle Bearings	*32211 x 1 / 6211Z x 2* *32212 x 1 / 6212Z x 2*
Bearings Of Ball Screw Bearing Block	*7204 x 2*
Seal Of Ball Screw Bearing Block	*TC26 - 42 - 8 x 2*
Facing Head Bearings	*7204 x 4*
Single-Slide Facing Head Model	*FA-610*
Facing Head Slider Stroke	*10 mm.*

*** Roundness* ***≤ 0.003 mm.***
**** Slider Self-Repeatability* ***≤ 0.005 mm.***
***** All dimensions are given in millimeters.*

SR60-A_2-4 FA-610

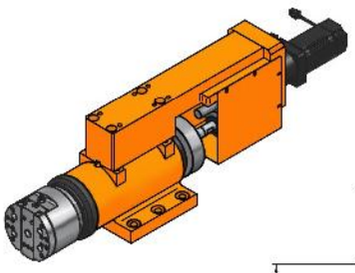

台灣精品 2017
TAIWAN EXCELLENCE

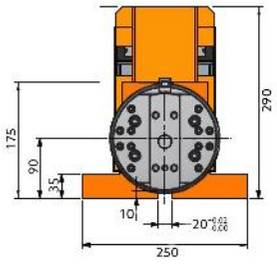

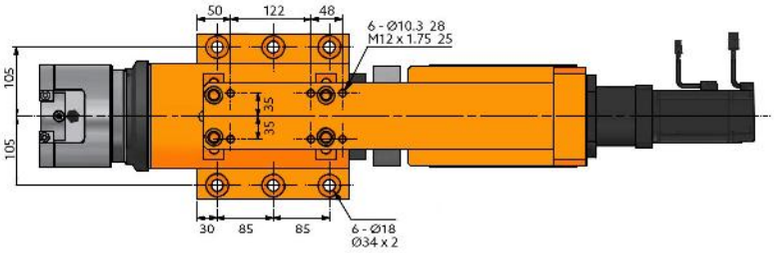

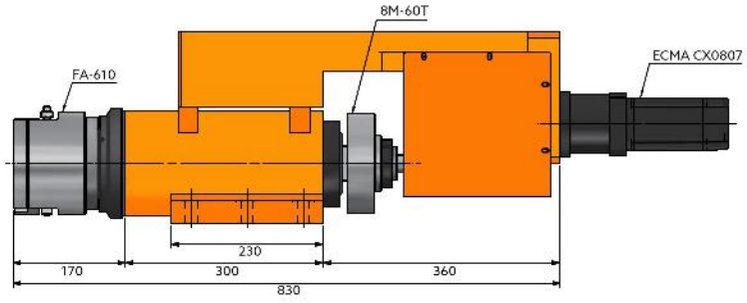

SR60-A_2-4 FA-610 MB

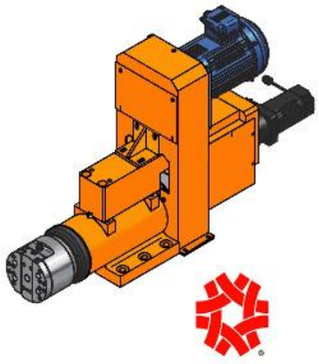

台灣精品2017
TAIWAN EXCELLENCE

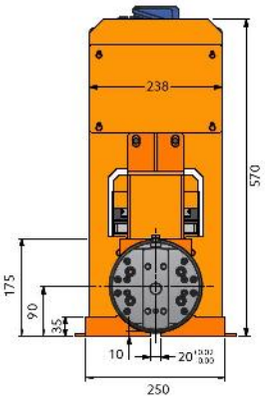

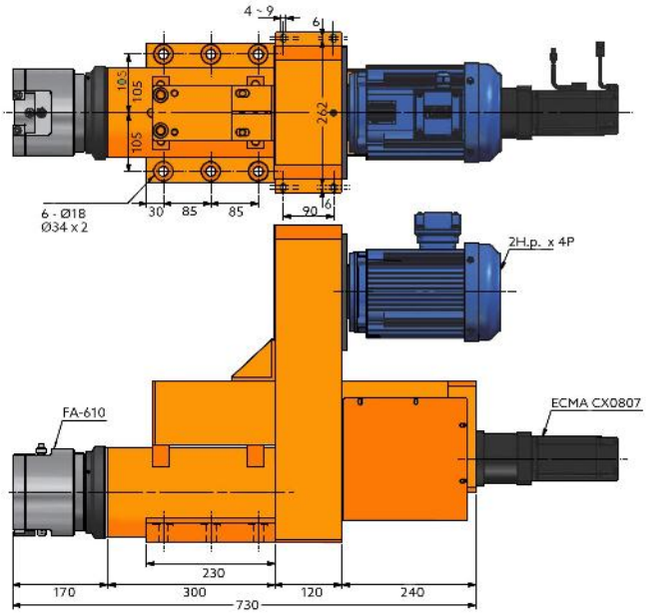

SR80-A_2-5 FA-812

Servo Facing Spindle Head Round Housing Device

(With Single Slide Head)

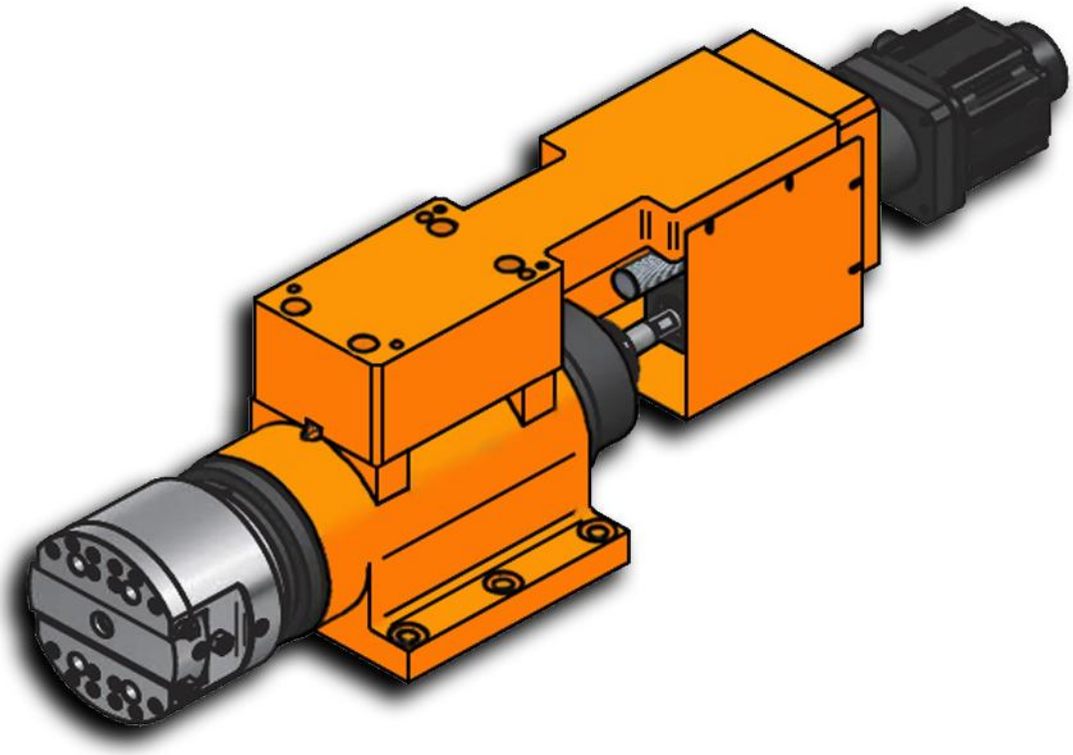

台灣精品 2017
TAIWAN EXCELLENCE

Characteristics & Dimensions

Model	SR80-A_2-5
Maximum Spindle Speed (r.p.m.)	*1,200*
Motor Power (3 Phases)	*3 H.p. x 4*
Spindle Pulley	*8M - 60T*
Spindle Bearings	*32216 x 2 / 6216Z x 2*
Bearings Of Ball Screw Bearing Block	*7205 x 2*
Seal Of Ball Screw Bearing Block	*TC30 - 50 - 10 x 2*
Facing Head Bearings	*7204 x 4*
Single-Slide Facing Head Model	*FA-812*
Facing Head Slider Stroke	*12 mm.*

*** Roundness* ***≤ 0.003 mm.***
**** Slider Self-Repeatability* ***≤ 0.005 mm.***
***** All dimensions are given in millimeters.*

SR80-A_2-5 FA-812

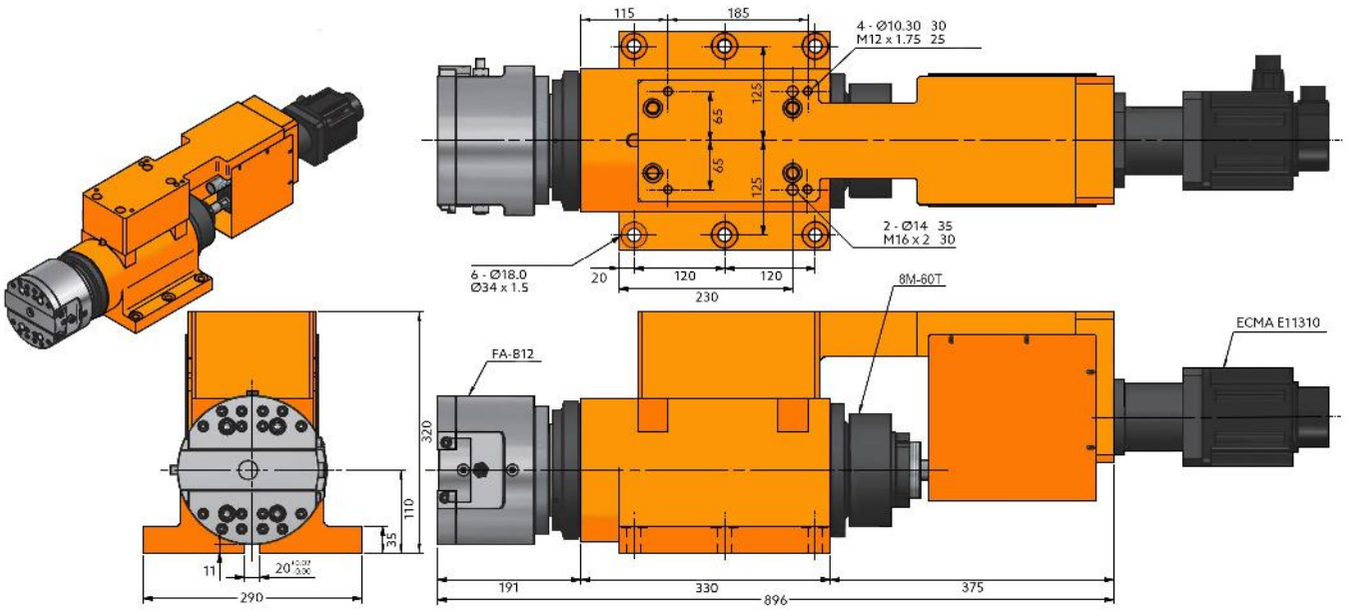

SR80-A_2-5 FA-812-MB

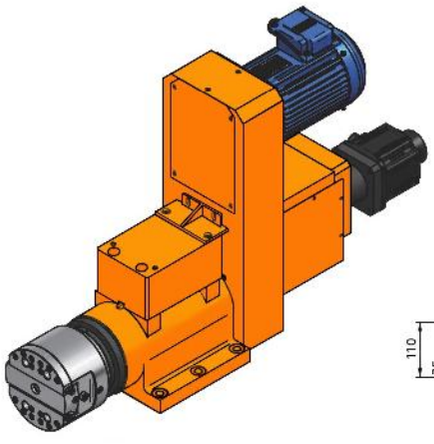

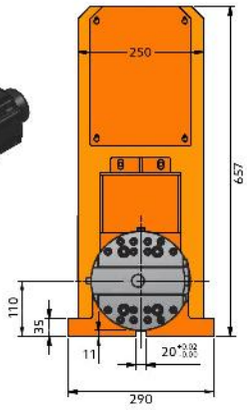

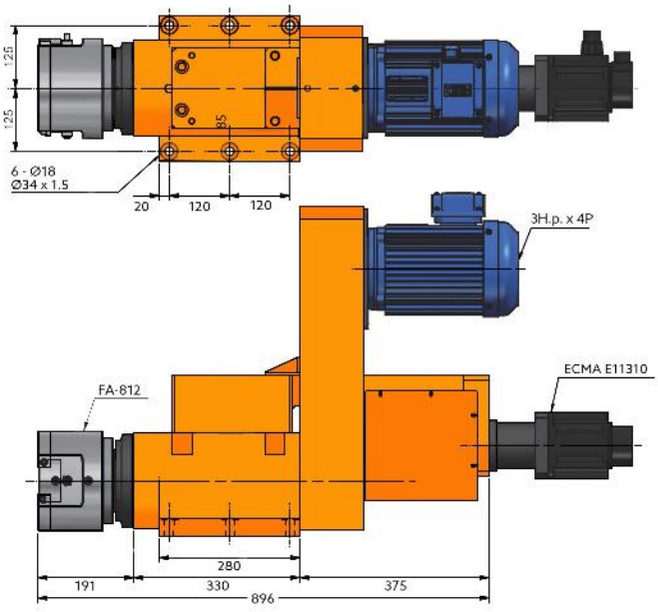

SR80-A_2-5 FA-830

Servo Facing Spindle Head Round Housing Device

(With Single Slide Head)

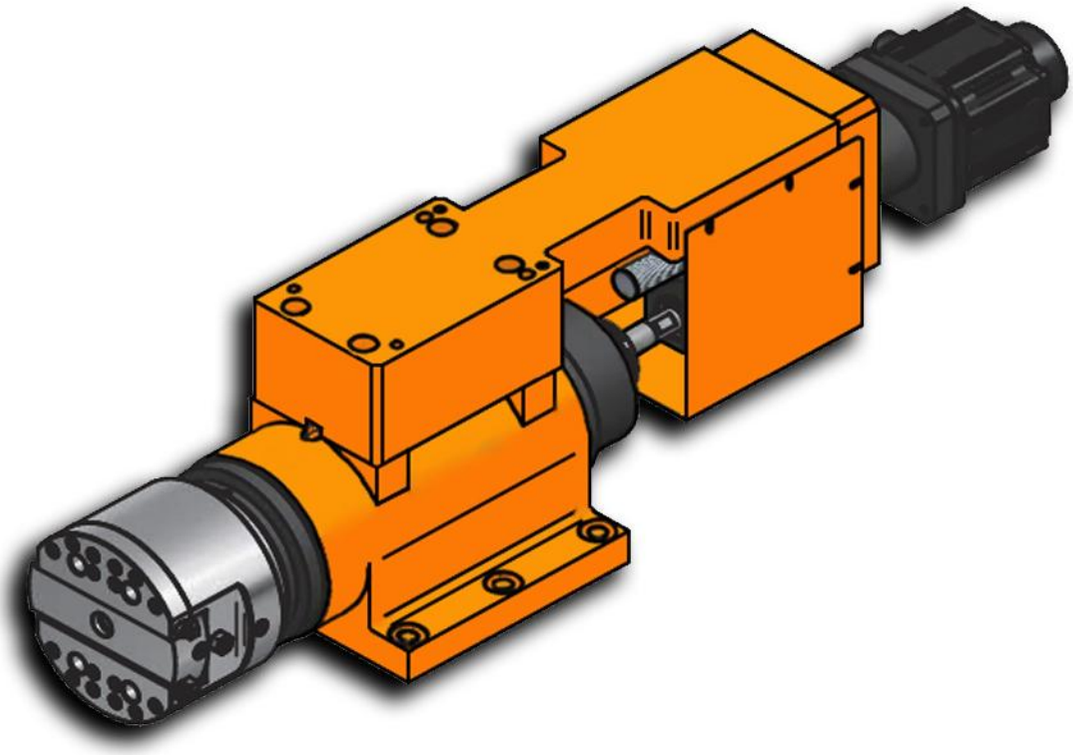

台灣精品 2017
TAIWAN EXCELLENCE

Characteristics & Dimensions

MODEL	SR80-A_2-5
Maximum Spindle Speed (r.p.m.)	*1,200*
Motor Power (3 Phases)	*3 H.p. x 4*
Spindle Pulley	*8M - 60T*
Spindle Bearings	*32216 x 2 / 6216Z x 2*
Bearings Of Ball Screw Bearing Block	*7205 x 2*
Seal Of Ball Screw Bearing Block	*TC30 - 50 - 10 x 2*
Facing Head Bearings	*7204 x 4*
Single-Slide Facing Head Model	*FA-830*
Facing Head Slider Stroke	*30 mm.*

*** Roundness* ***≤ 0.003 mm.***
**** Slider Self-Repeatability* ***≤ 0.005 mm.***
***** All dimensions are given in millimeters.*

SR80-A_2-5 FA-830-MB

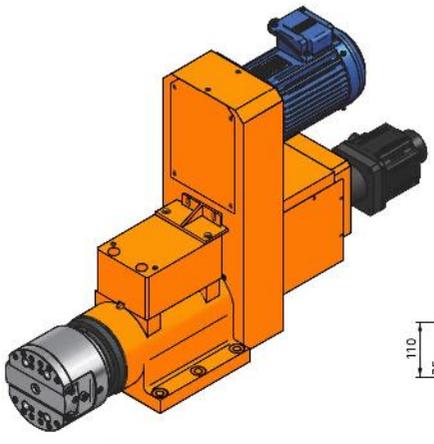

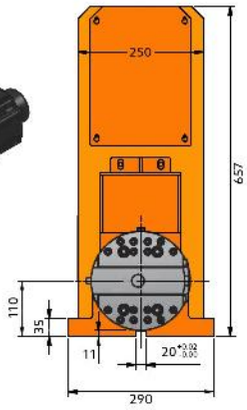

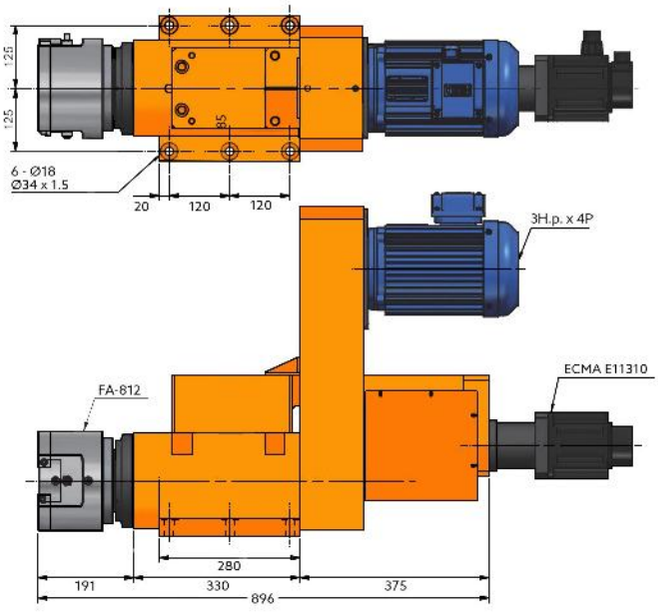

SR80-A_2-5 FA-830

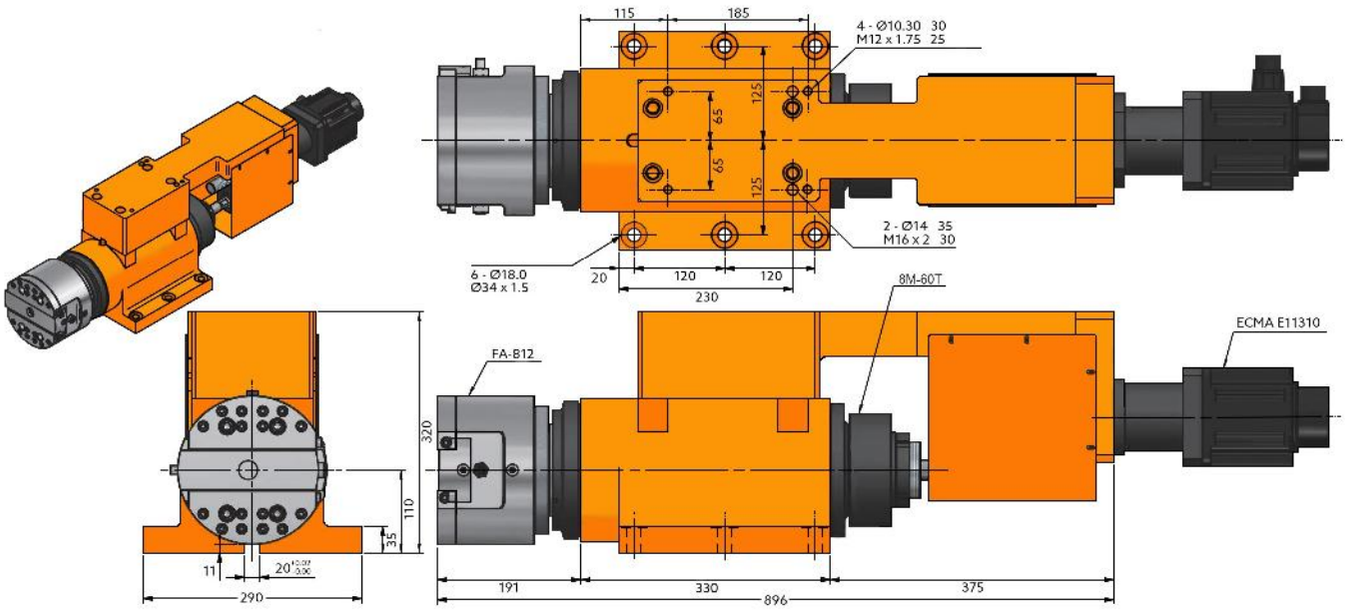

SR80-A_2-5 FD-880

Servo Facing Spindle Head Round Housing Device

(With Double Slide Head)

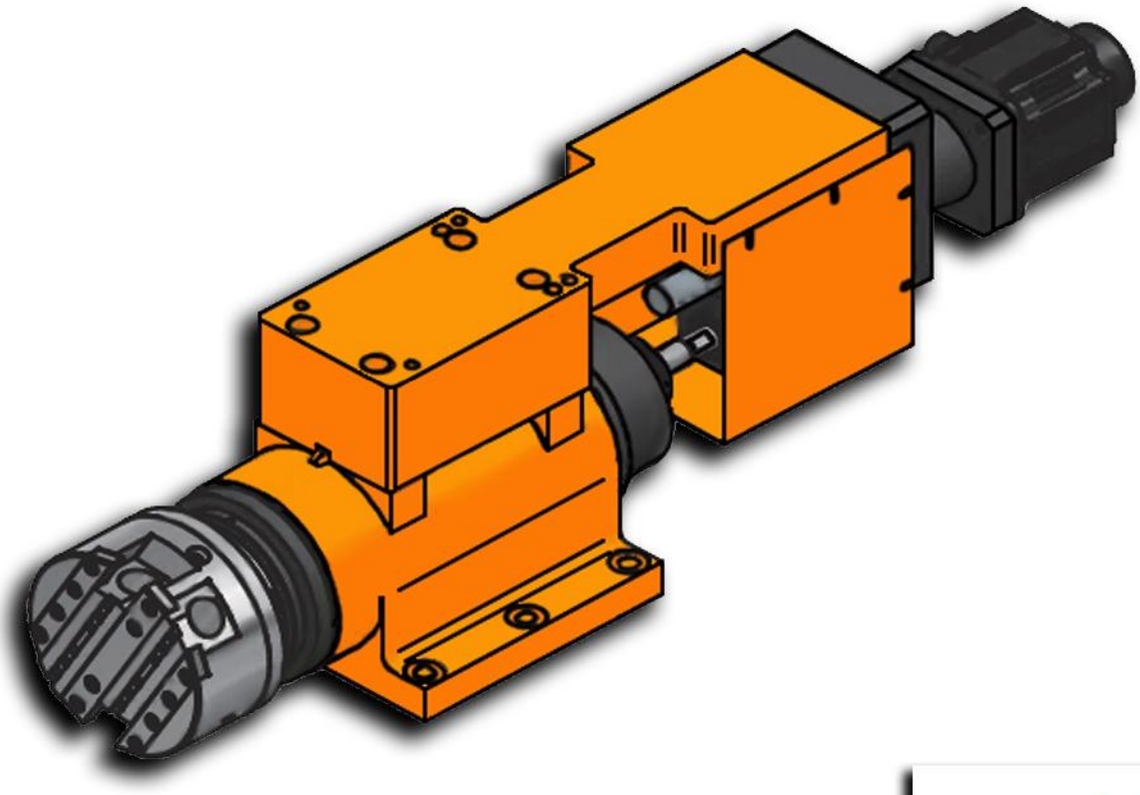

台灣精品 2017
TAIWAN EXCELLENCE

Characteristics & Dimensions

MODEL	SR80H-A_2-5
Maximum Spindle Speed (r.p.m.)	*2,500*
Motor Power (3 Phases)	*3 H.p. x 4*
Spindle Pulley	*8M - 60T*
Spindle Bearings	*7215 x 4*
Bearings Of Ball Screw Bearing Block	*7205 x 2*
Seal Of Ball Screw Bearing Block	*TC30 - 50 - 10 x 2*
Facing Head Bearings	*7204 x 4*
Single-Slide Facing Head Model	*FD-880*
Facing Head Slider Stroke	*80 mm.*

*** Roundness* ***≤ 0.003 mm.***
**** Slider Self-Repeatability* ***≤ 0.005 mm.***
***** All dimensions are given in millimeters.*

SR80-A_2-5 FD-880

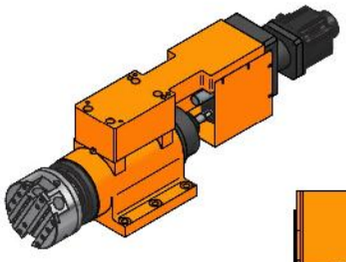

台灣精品 2017
TAIWAN EXCELLENCE

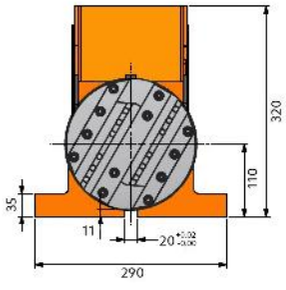

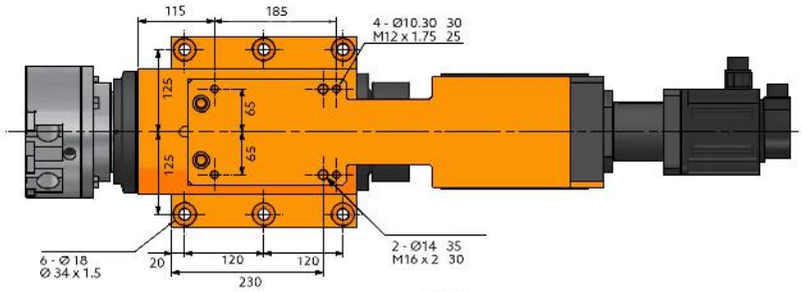

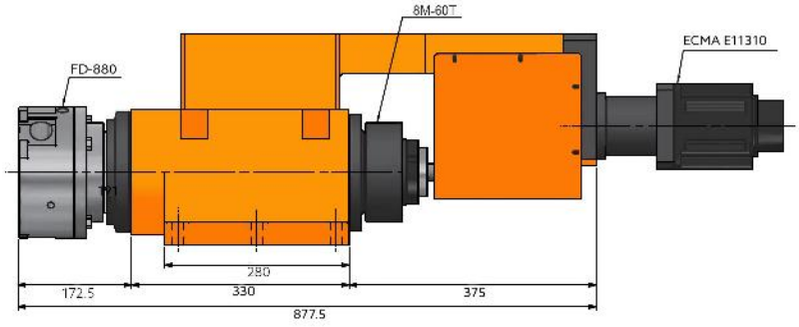

SR80-A$_2$-5 FD-880-MB

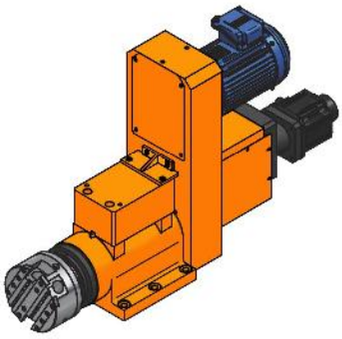

台灣精品2017
TAIWAN EXCELLENCE

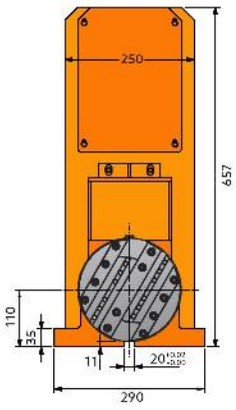

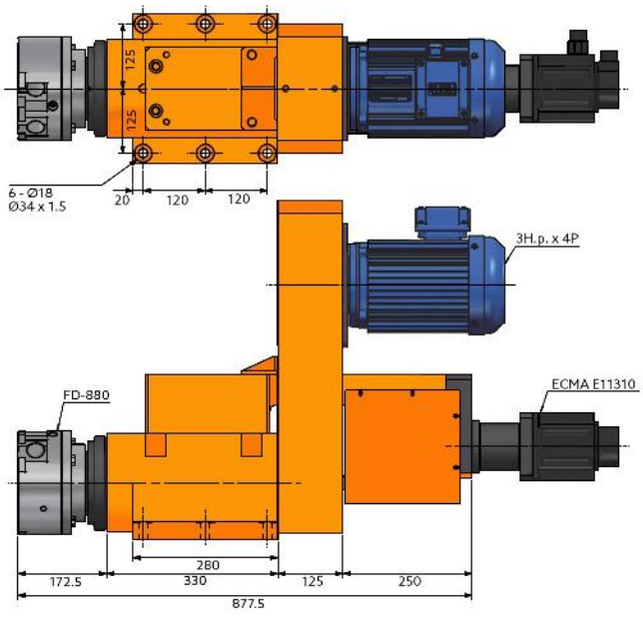

S80H-A_2-5 FA-812

High Performance Servo Facing Spindle Head Square Housing Device

(With Double Single Head)

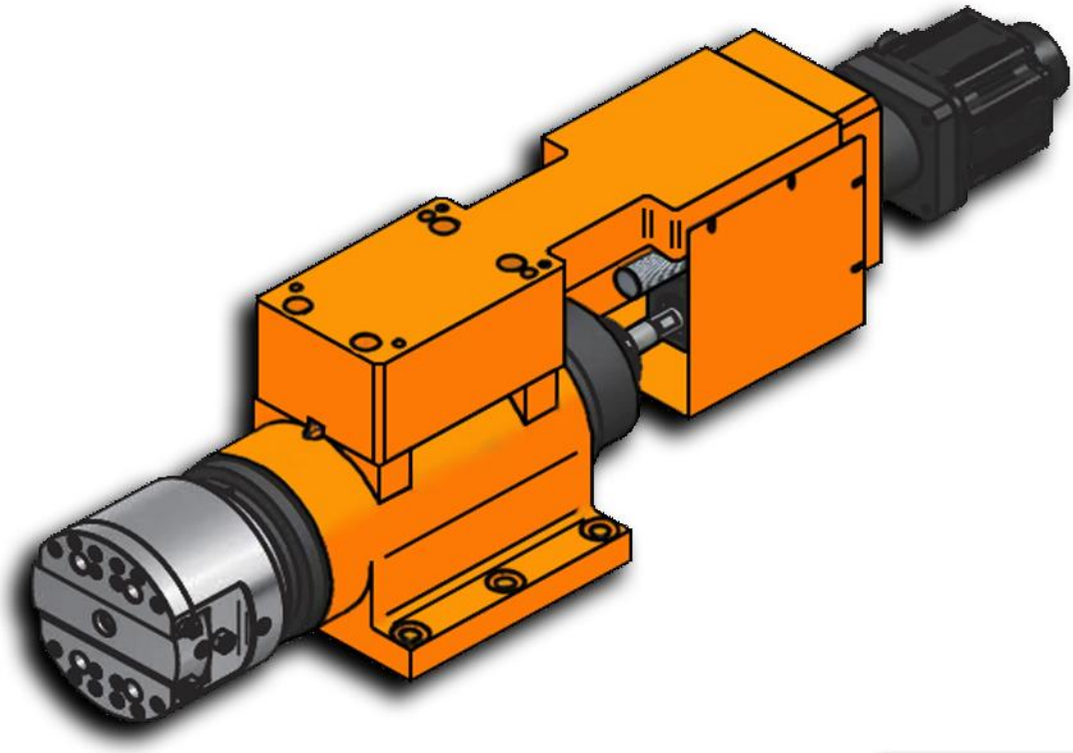

台灣精品 2017
TAIWAN EXCELLENCE

Characteristics & Dimensions

MODEL	S80H-A_2-5
Maximum Speed (r.p.m.)	*2,500*
Maximum Horsepower (3 Phases)	*3 H.p. x 4*
Spindle Pulley	*8M - 60T*
Spindle Bearings	*7216 x 4*
Ball Screw Bearing Block Bearings	*7205 x 2*
Ball Screw Bearing Block Seals	*TC30-50-10 x 2*
Facing Head Bearings	*7204 x 4*
Single-Slide Facing Head Model	*FA-812*
Facing Head Slider Stroke	*12 mm.*

*** Roundness* ***≤ 0.003 mm.***
**** Slider Self-Repeatability* ***≤ 0.005 mm.***
***** All dimensions are given in millimeters.*

S80H-A_2-5 FA-812

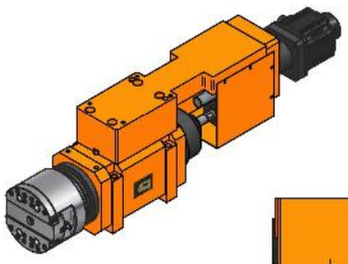

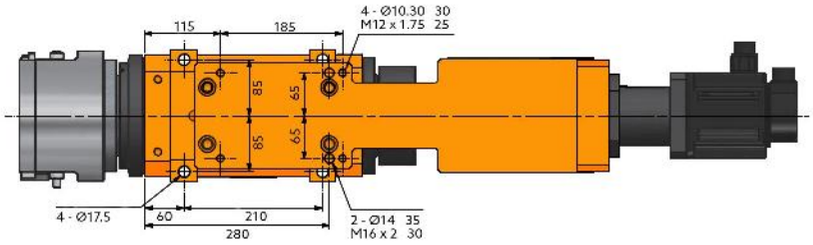

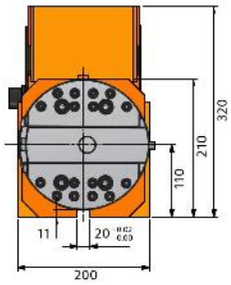

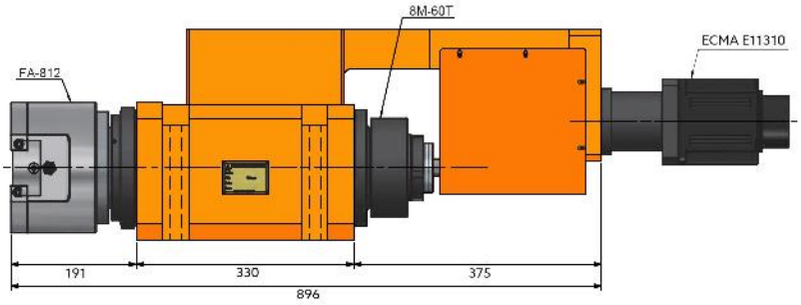

S80H-A_2-5 FA-812-MB

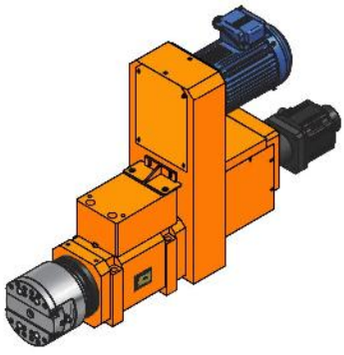

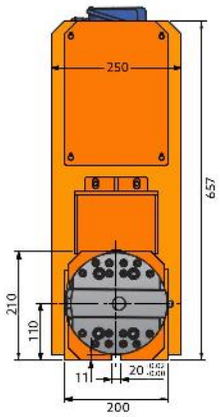

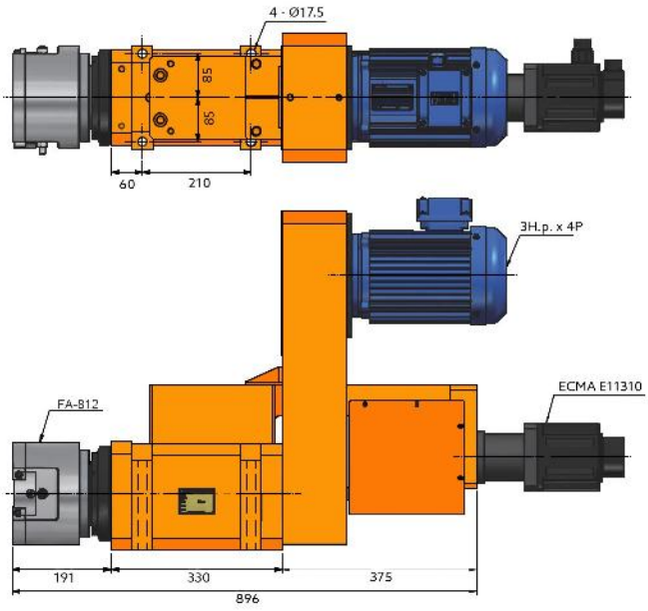

S80H-A_2-5 FA-830

High Performance Servo Facing Spindle Head Square Housing Device

(With Single Slide Head)

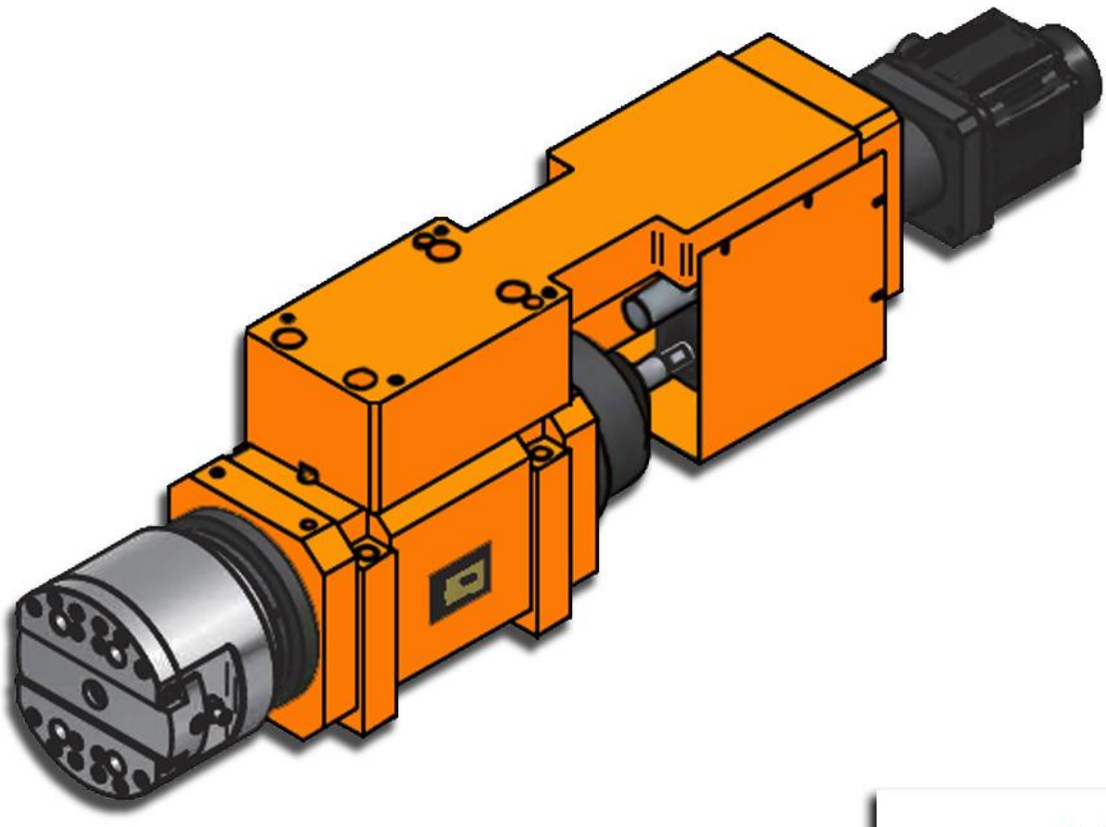

台灣精品 2017
TAIWAN EXCELLENCE

Characteristics & Dimensions

MODEL	S80H-A_2-5
Maximum Speed (r.p.m.)	*2,500*
Maximum Horsepower (3 Phases)	*3 H.p. x 4*
Spindle Pulley	*8M - 60T*
Spindle Bearings	*7216 x 4*
Ball Screw Bearing Block Bearings	*7205 x 2*
Ball Screw Bearing Block Seals	*TC30-50-10 x 2*
Facing Head Bearings	*7204 x 4*
Single-Slide Facing Head Model	*FA-830*
Facing Head Slider Stroke	*30 mm.*

*** Roundness* ***≤ 0.003 mm.***
**** Slider Self-Repeatability* ***≤ 0.005 mm.***
***** All dimensions are given in millimeters.*

S80H-A_2-5 FA-830-MB

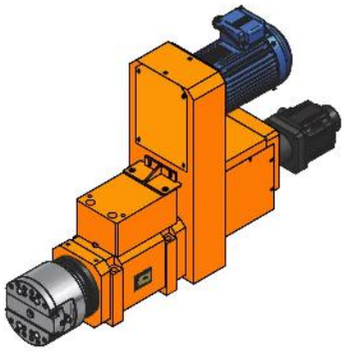

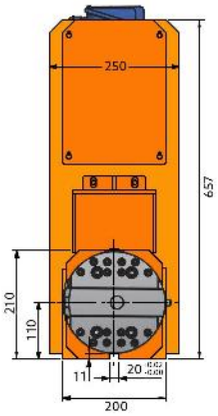

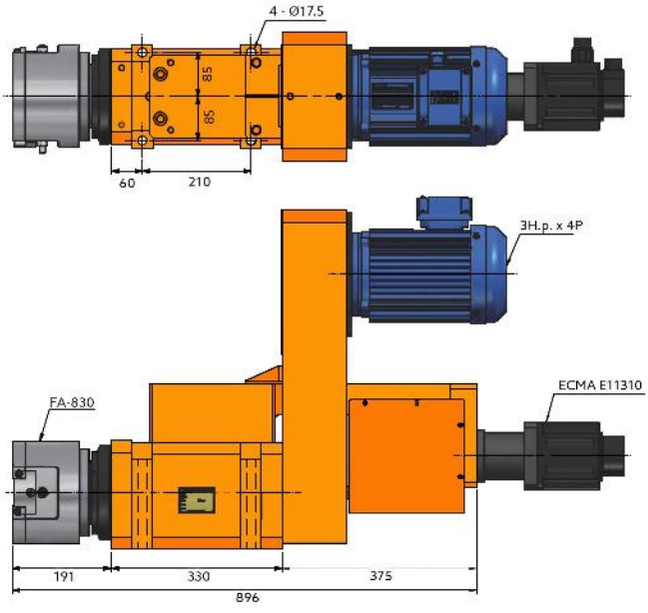

S80H-A_2-5 FA-830

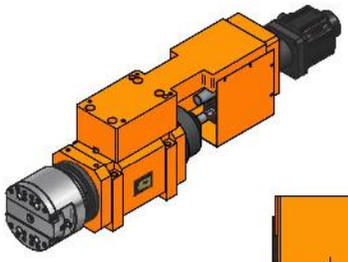

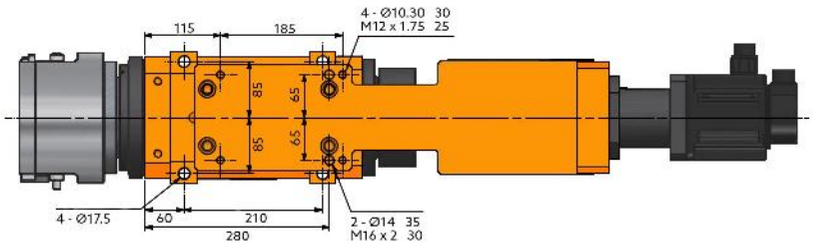

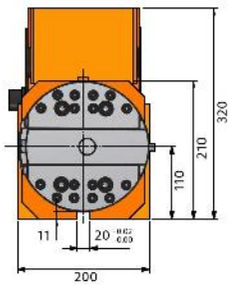

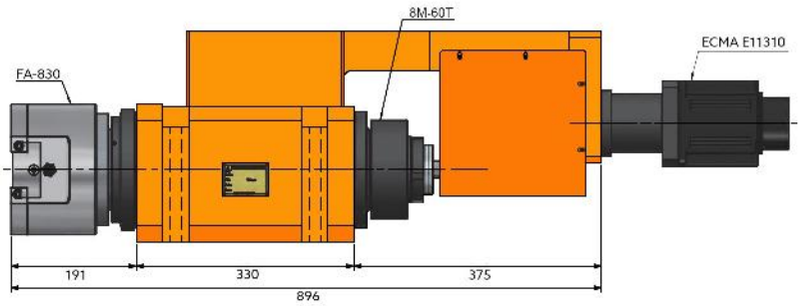

S80H-A_2-5 FD-880

High Performance Servo Facing Spindle Head Square Housing Device

(With Double Slide Head)

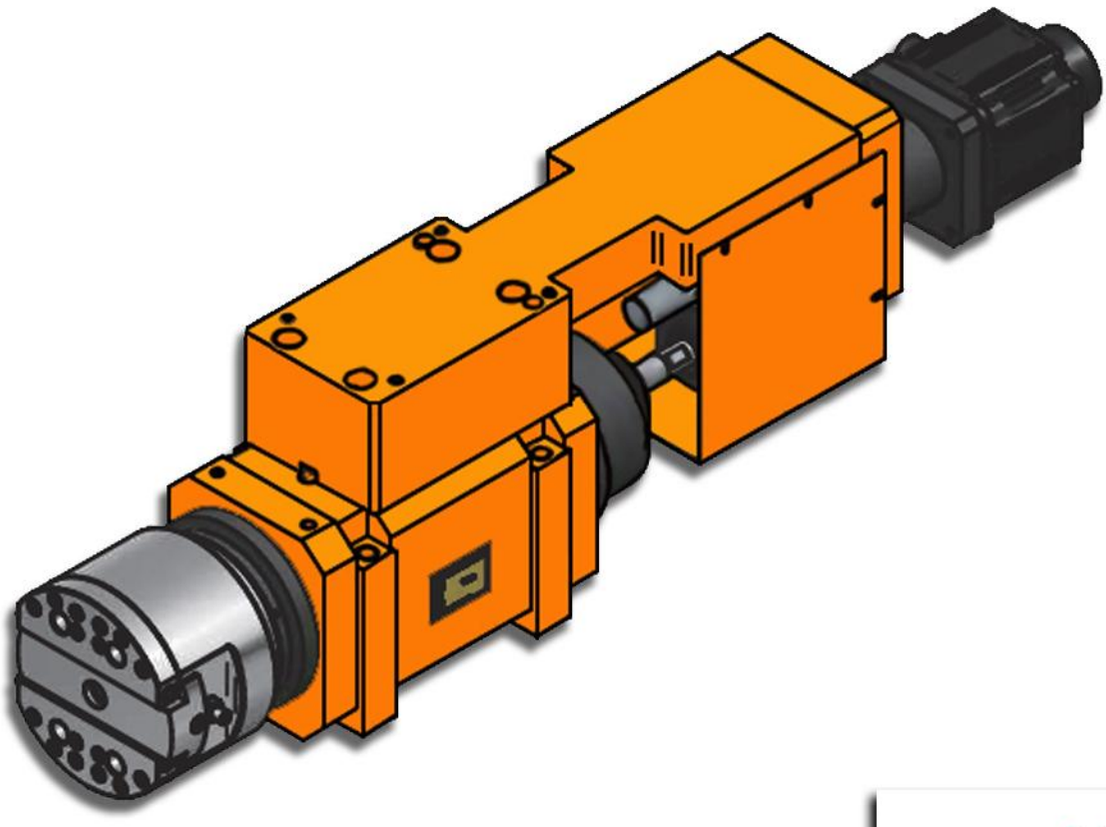

台灣精品 2017
TAIWAN EXCELLENCE

Characteristics & Dimensions

MODEL	S80H-A_2-5
Maximum Speed (r.p.m.)	*2,500*
Maximum Horsepower (3 Phases)	*3 H.p. x 4*
Spindle Pulley	*8M - 60T*
Spindle Bearings	*7216 x 4*
Ball Screw Bearing Block Bearings	*7205 x 2*
Ball Screw Bearing Block Seals	*TC30-50-10 x 2*
Facing Head Bearings	*7204 x 4*
Single-Slide Facing Head Model	*FD-880*
Facing Head Slider Stroke	*80 mm.*

*** Roundness* ***≤ 0.003 mm.***
**** Slider Self-Repeatability* ***≤ 0.005 mm.***
***** All dimensions are given in millimeters.*

S80H-A_2-5 FD-880

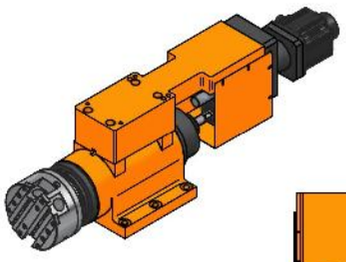

台灣精品 2017
TAIWAN EXCELLENCE

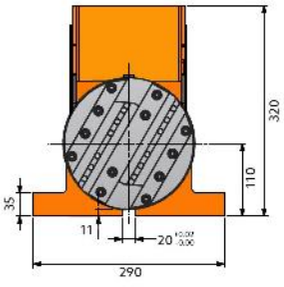

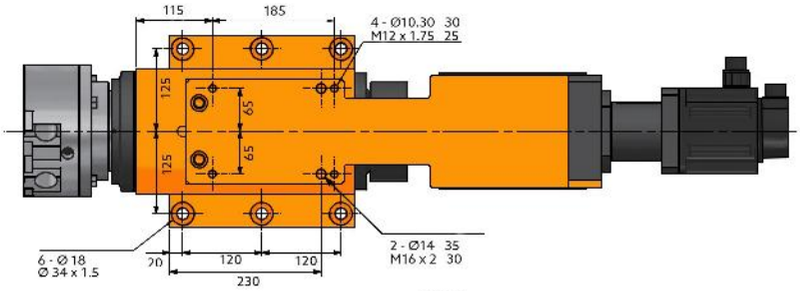

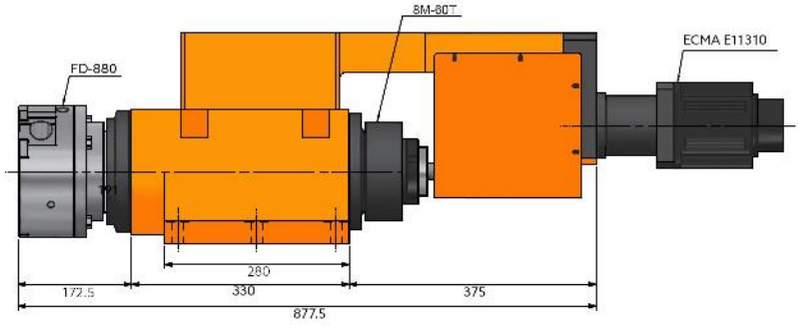

S80H-A_2-5 FD-880

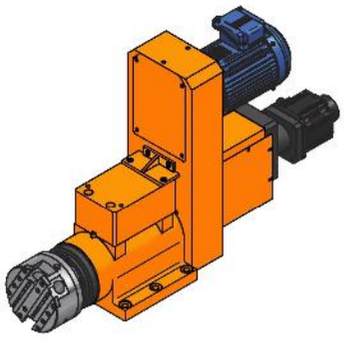

台灣精品2017
TAIWAN EXCELLENCE

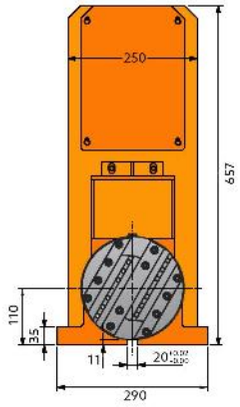

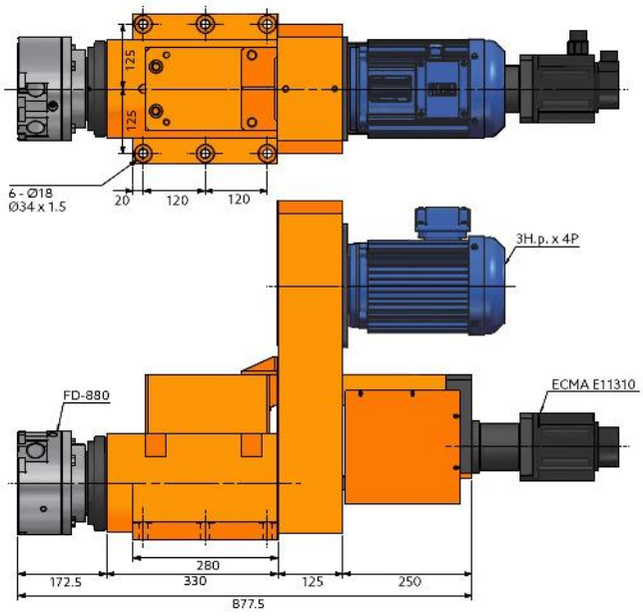

SR80H-A_2-5 FD-880

High Performance Servo Facing Spindle Head Round Housing Device

(With Double Slide Head)

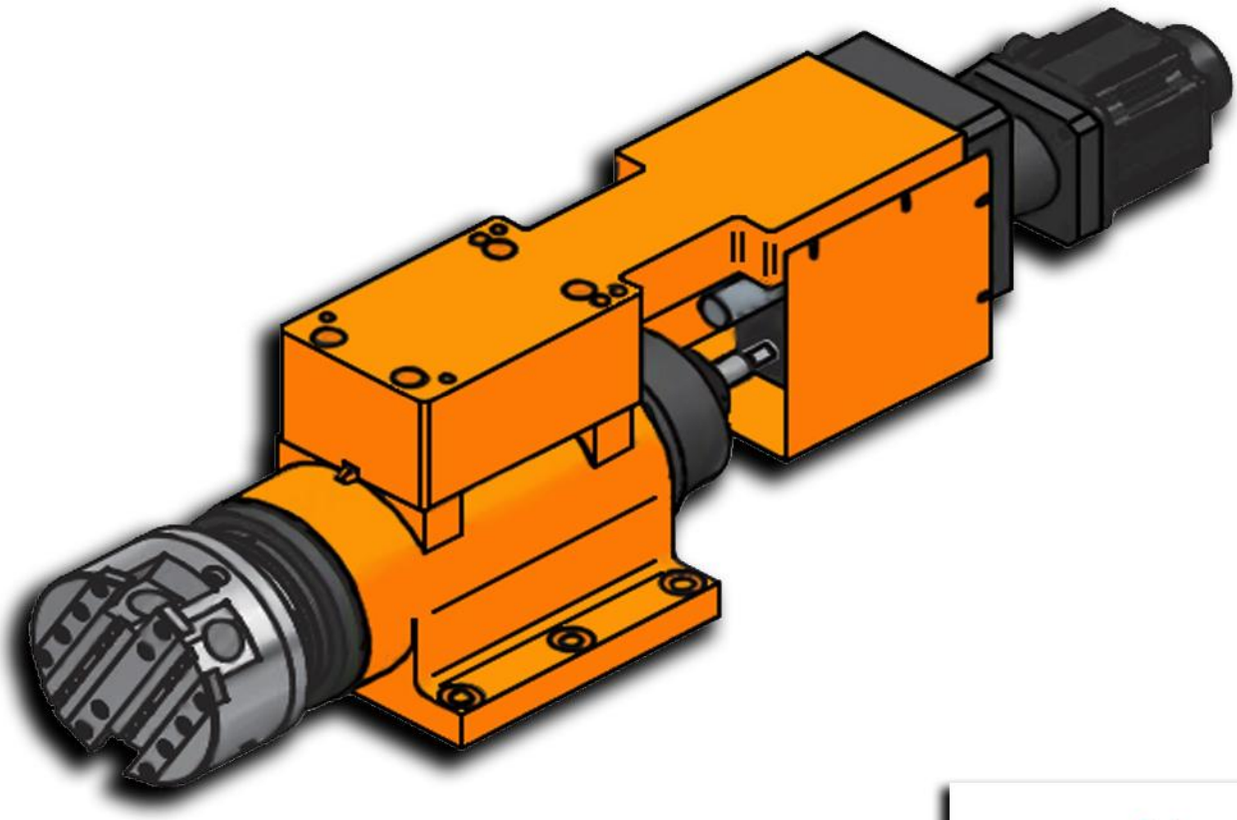

台灣精品 2017
TAIWAN EXCELLENCE

Characteristics & Dimensions

MODEL	SR80H-A_2-5
Maximum Spindle Speed (r.p.m.)	*2,500*
Motor Power (3 Phases)	*3 H.p. x 4*
Spindle Pulley	*8M - 60T*
Spindle Bearings	*7215 x 4*
Bearings Of Ball Screw Bearing Block	*7205 x 2*
Seal Of Ball Screw Bearing Block	*TC30 - 50 - 10 x 2*
Facing Head Bearings	*7204 x 4*
Single-Slide Facing Head Model	*FD-880*
Facing Head Slider Stroke	*80 mm.*

*** Roundness* ***≤ 0.003 mm.***
**** Slider Self-Repeatability* ***≤ 0.005 mm.***
***** All dimensions are given in millimeters.*

SR80H-A_2-5 FD-880

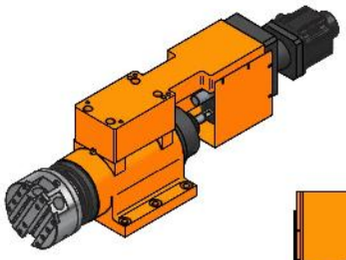

台灣精品 2017
TAIWAN EXCELLENCE

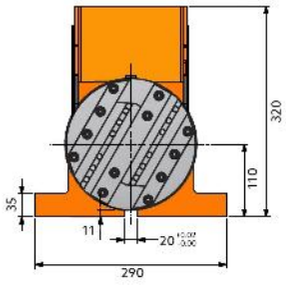

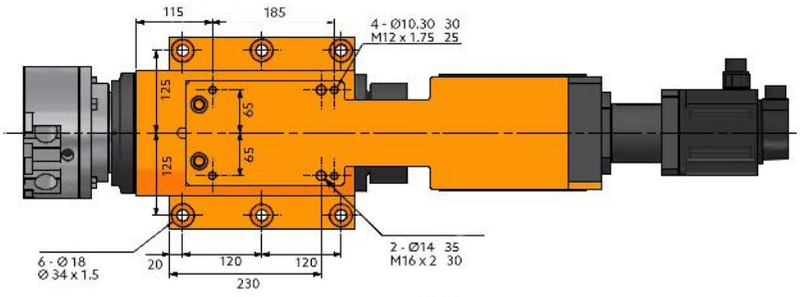

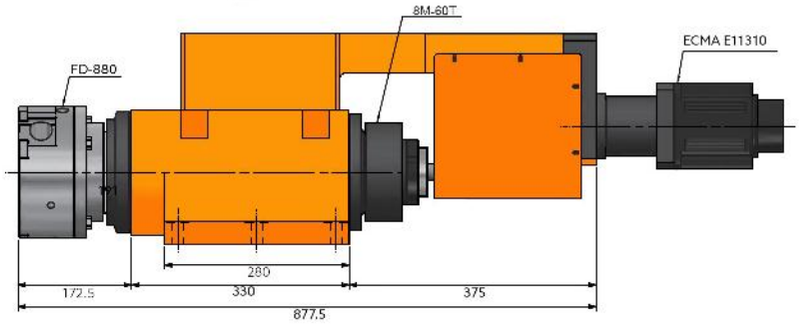

SR80H-A$_2$-5 FD-880-MB

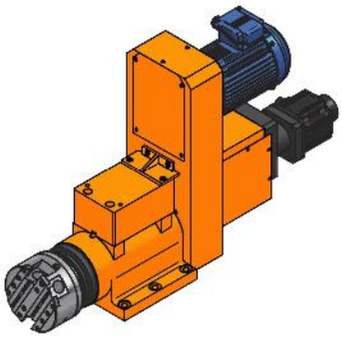

台灣精品2017
TAIWAN EXCELLENCE

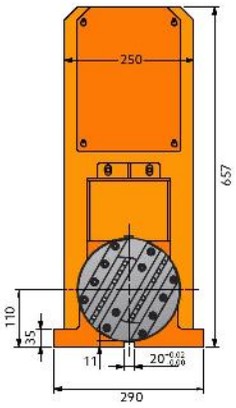

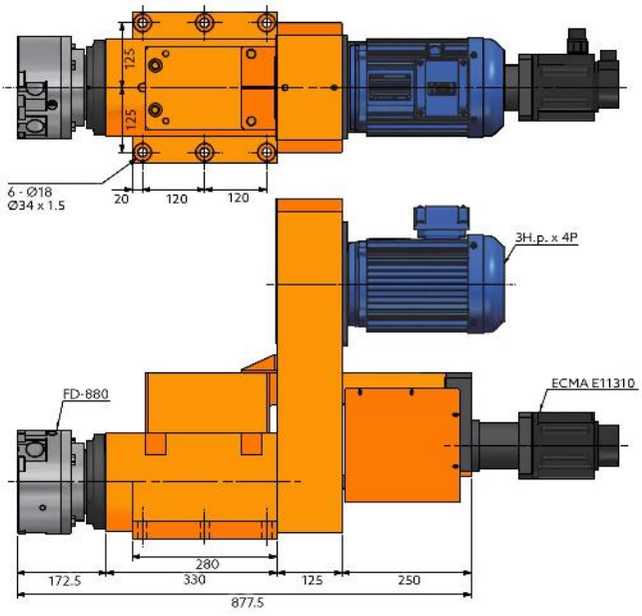

ST SERIES

TAPPING HEADS

STON-50M

Tapping Spindle Heads

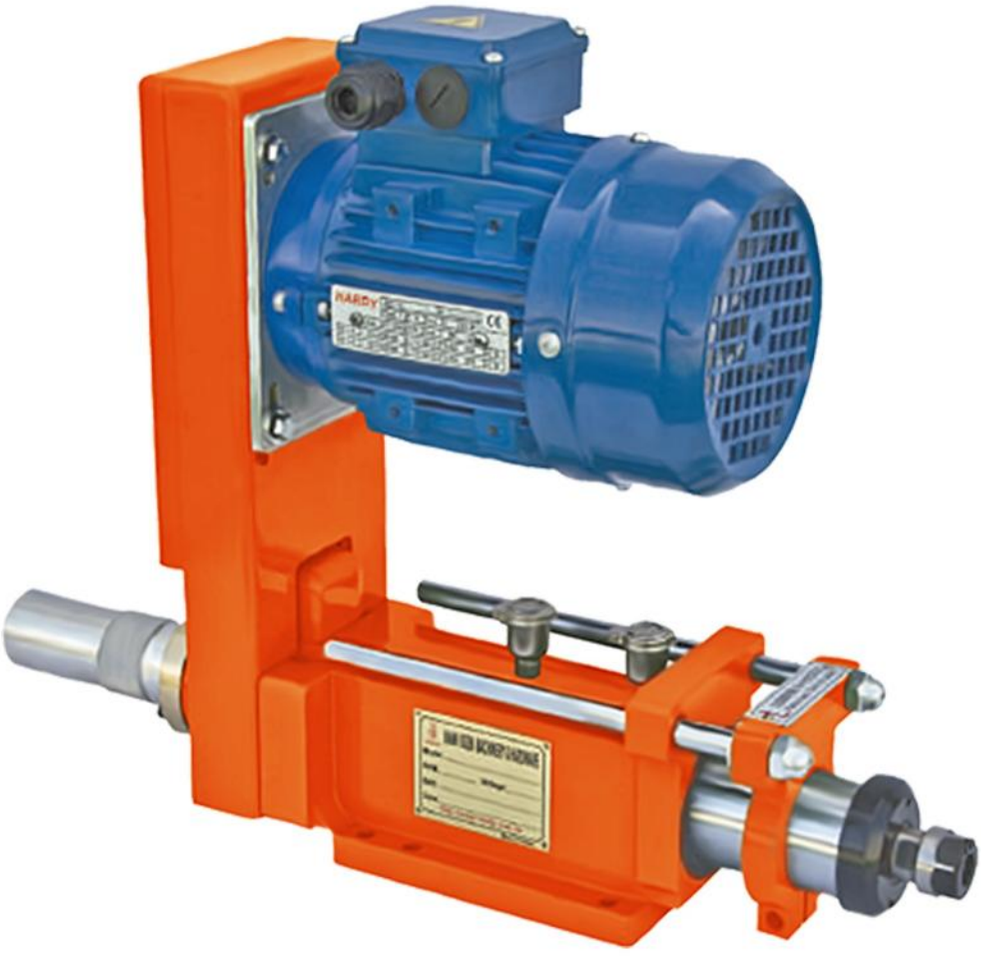

Characteristics & Dimensions

MODEL	ST0N-50M
Tapping Capacity *(S45C)*	*M6*
Maximum Stroke	*50*
Thread Guide Pitch	*0.25 ~ 1.25mm*
Electric Motor Power *(3 Phases)*	*½ H.p. (220/440 volts)*
System Net Weight *(Kg)*	*20.00*
Spindle Bearings	*6004ZZ x 3*
Pulley Bearings	*6906ZZ x 3*
Spindle Seals	*TC25 x 42 x 8* *TC50 x 62 x 10*
Transmission Belt	*5J-240*

*** Roundness ≤ 0.003mm.*
**** All dimensions are given in millimeters.*

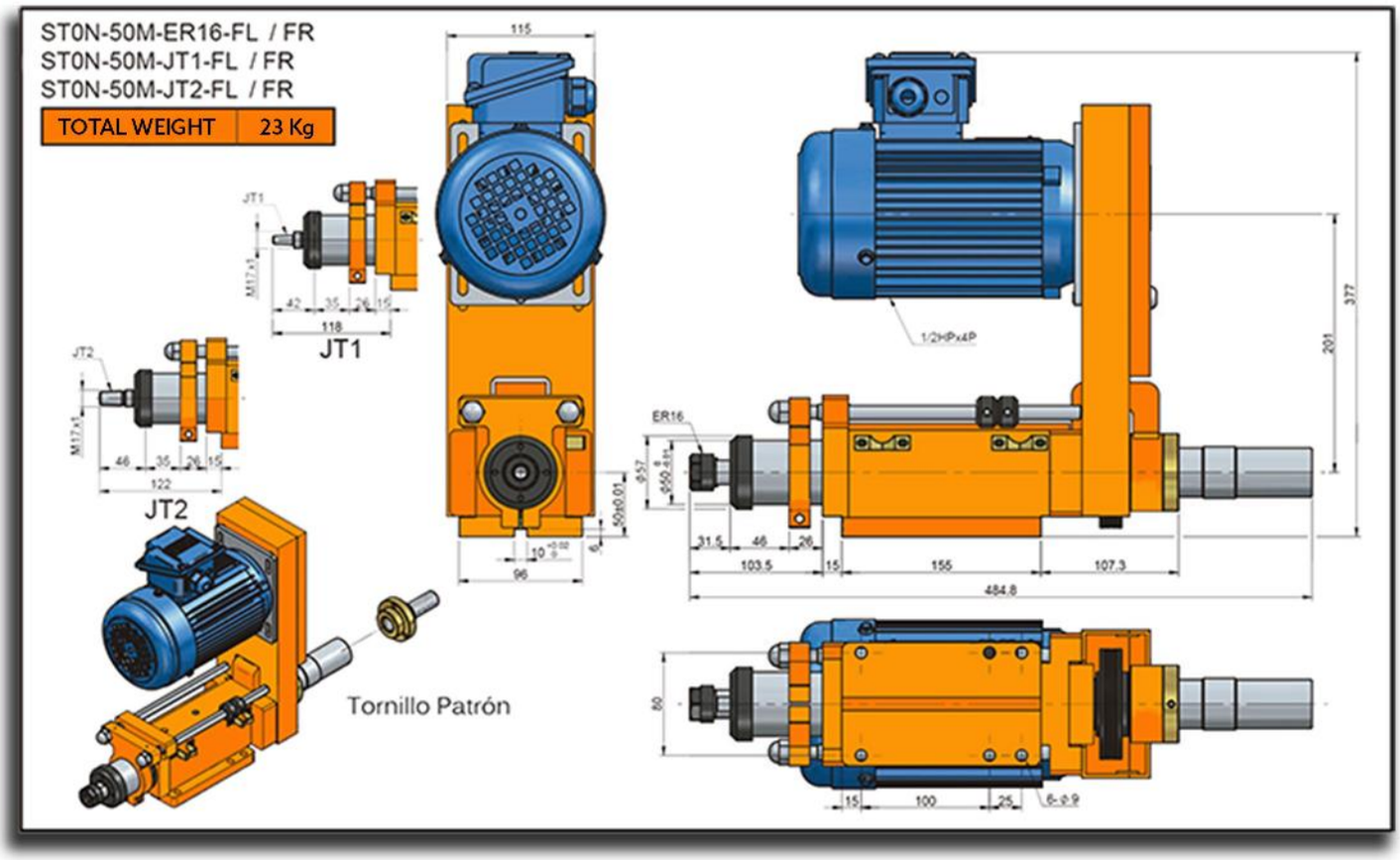
ST0N-50M-ER16-FL / FR
ST0N-50M-JT1-FL / FR
ST0N-50M-JT2-FL / FR
TOTAL WEIGHT 23 Kg
JT1
JT2
Tornillo Patrón
ER16
1/2HPx4P

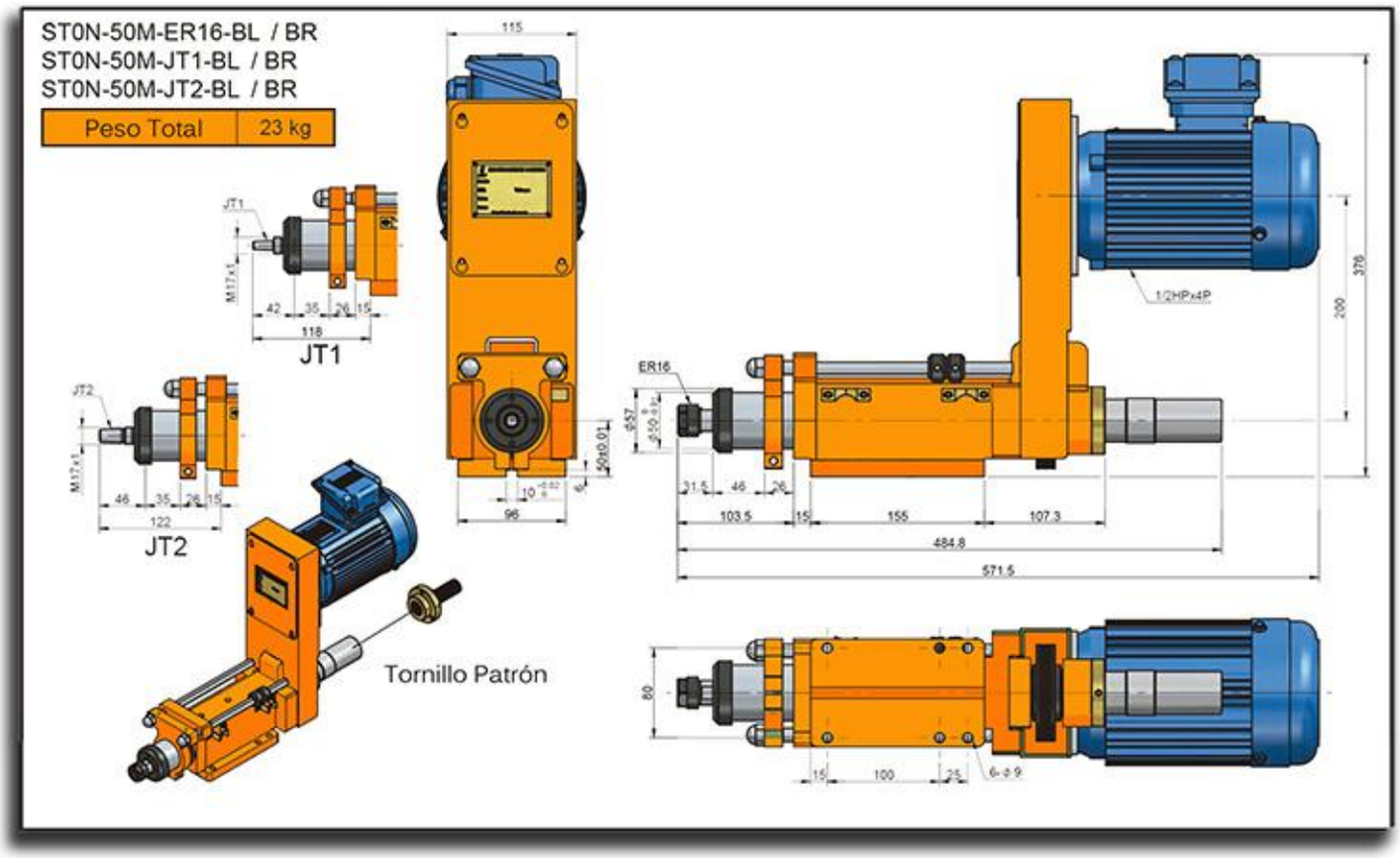
ST0N-50M-ER16-BL / BR
ST0N-50M-JT1-BL / BR
ST0N-50M-JT2-BL / BR
Peso Total
23 kg
JT1
JT2
Tornillo Patrón
ER16
1/2HPx4P
115
96
484.8
571.5

ST1N-65M

Tapping Spindle Heads



Characteristics & Dimensions

MODEL	ST1N-65M
Tapping Capacity (S45C)	*M12*
Maximum Stroke	*65*
Thread Guide Pitch	*0.40 ~ 2.00*
Electric Motor Power (3 Phases)	*1.00 H.p. (220/440 volts)*
System Net Weight (kg)	*42.00*
Spindle Bearings	*6004ZZ x 3*
Pulley Bearings	*6006ZZ x 3*
Spindle Seals	*TC25 x 42 x 8* *TC50 x 47T x 33W*
Transmission Belt	*A25 x Ø125* *8M x 47T x 33W*

*** Roundness ≤ 0.003mm.*
**** All dimensions are given in millimeters.*

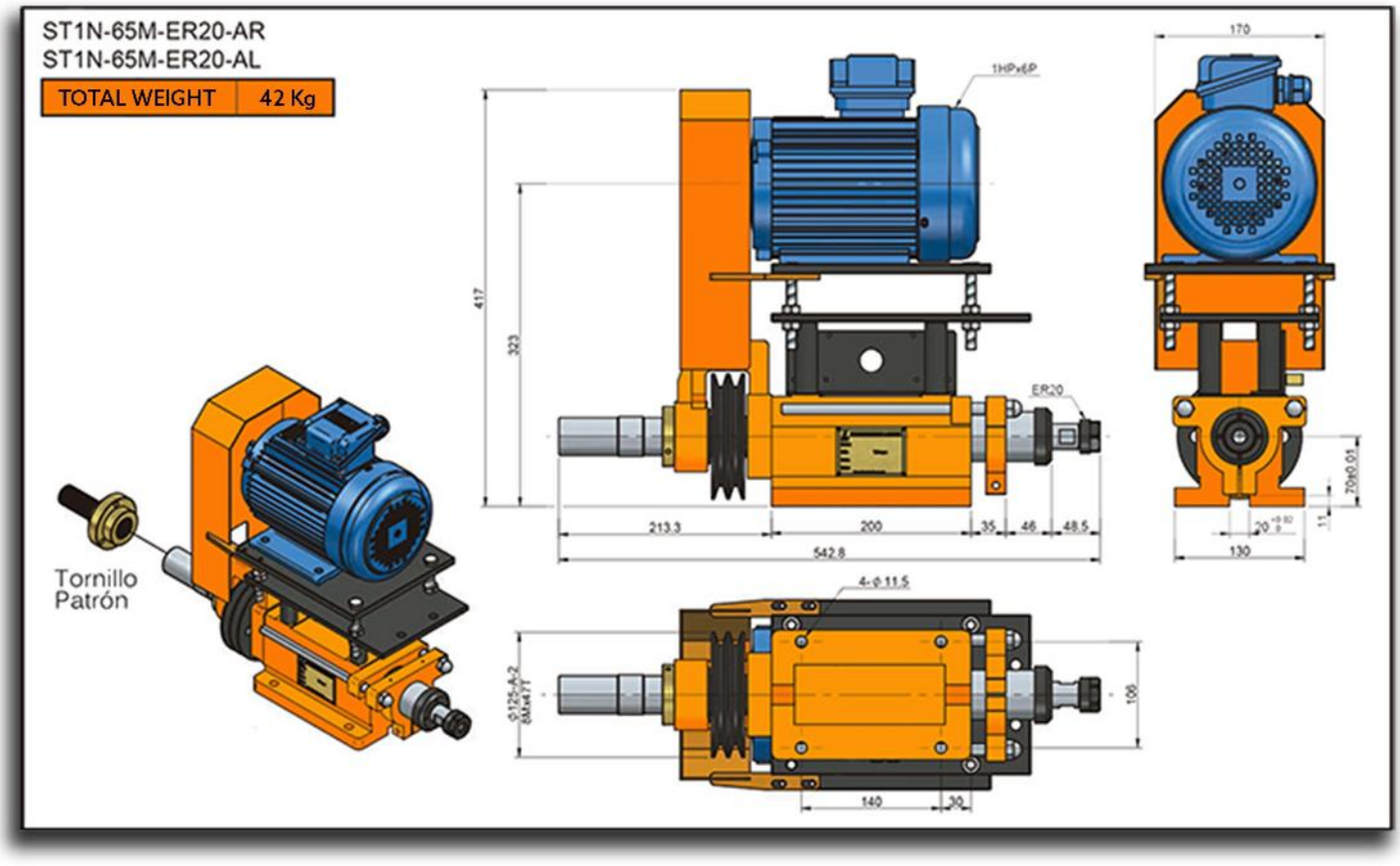
ST1N-65M-ER20-AR
ST1N-65M-ER20-AL
TOTAL WEIGHT
42 Kg
Tornillo
Patrón
1HPx6P
ER20
417
323
213.3
200
35
46
48.5
542.8
170
130
4-ø 11.5
140
30
100

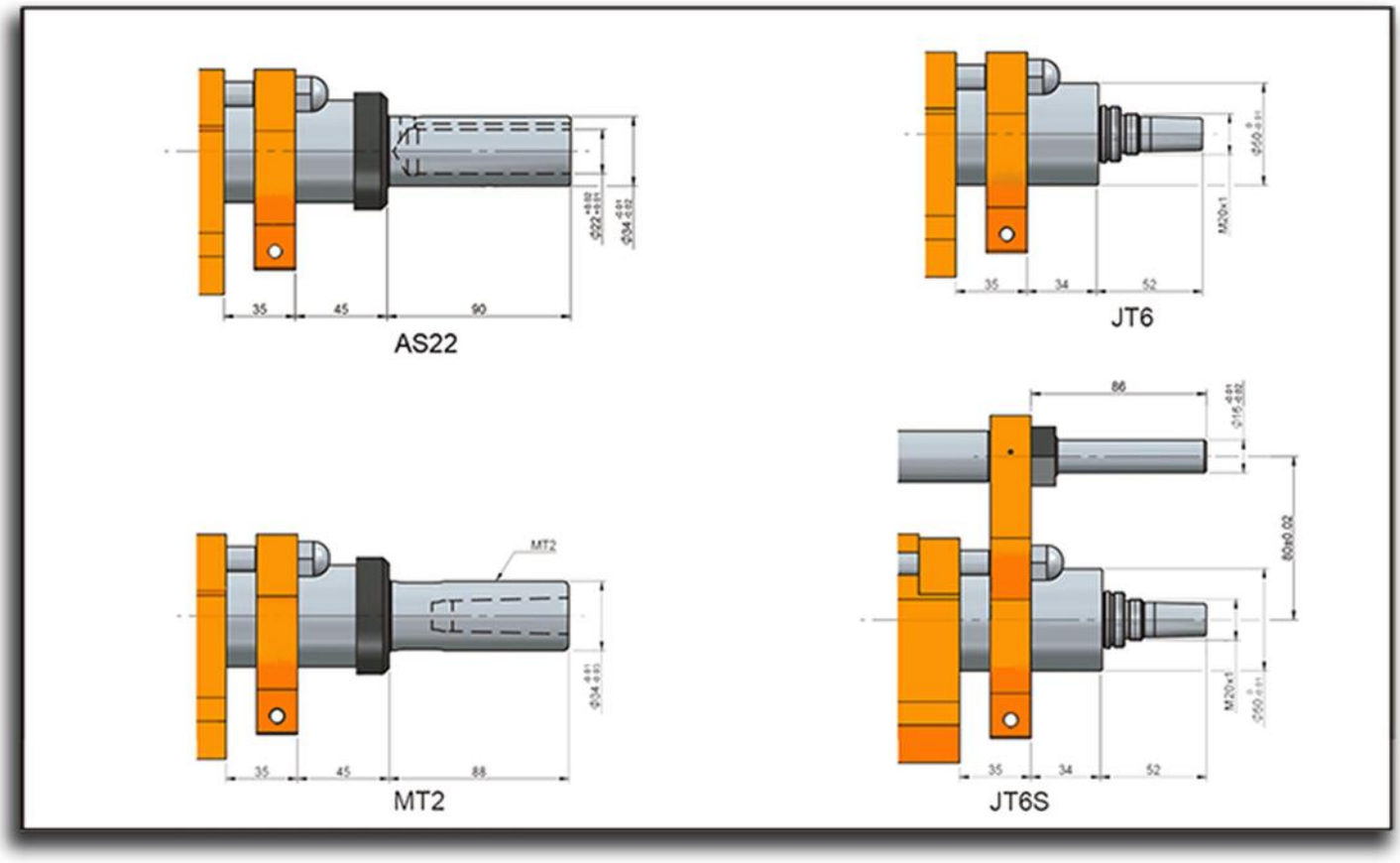
35
45
90
AS22
35
34
52
JT6
MT2
35
45
88
MT2
86
80±0.02
35
34
52
JT6S

ST2N-85M

Tapping Spindle Head



Characteristics & Dimensions

MODEL	ST2N-85M
Tapping Capacity (S45C)	*M30*
Maximum Stroke	*85*
Thread Guide Pitch	*0.70~ 2.50*
Electric Motor Power (3 Phases)	*1 H.p. (220/440 volts)*
System Net Weight	*80.00*
Spindle Bearings	*6008ZZ x 3*
Pulley Bearings	*6010ZZ x 3*
Spindle Seals	*TC45 x 68 x 12* *TC75 x 95 x 13*
Transmission Belt	*A2 x ØI50* *8M x 58T x 34W*

*** Roundness ≤ 0.003mm.*
**** All dimensions are given in millimeters.*

ST2N-85M-ER32-R-MF
ST2N-85M-ER32-L-MF

TOTAL WEIGHT	68 Kg

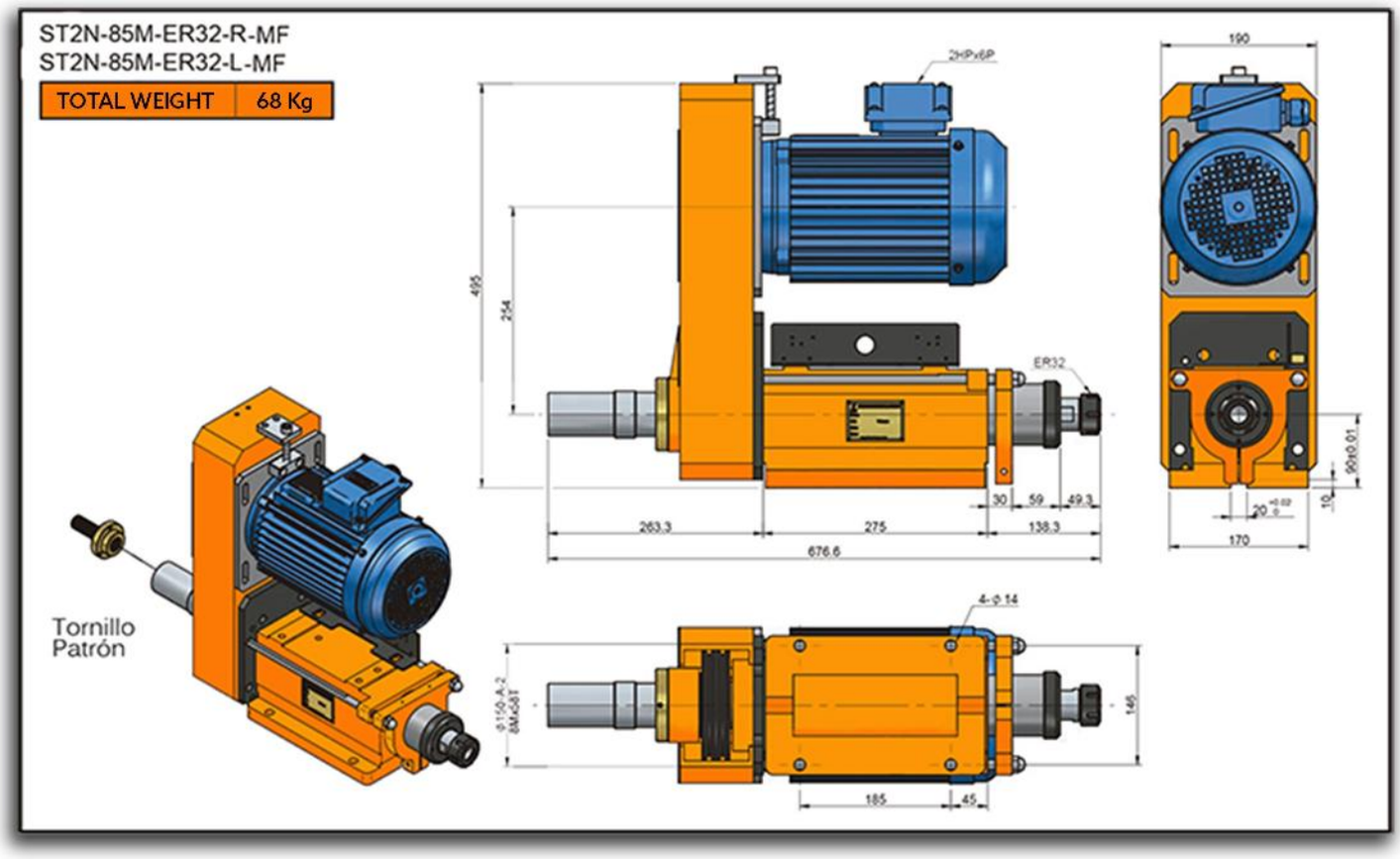

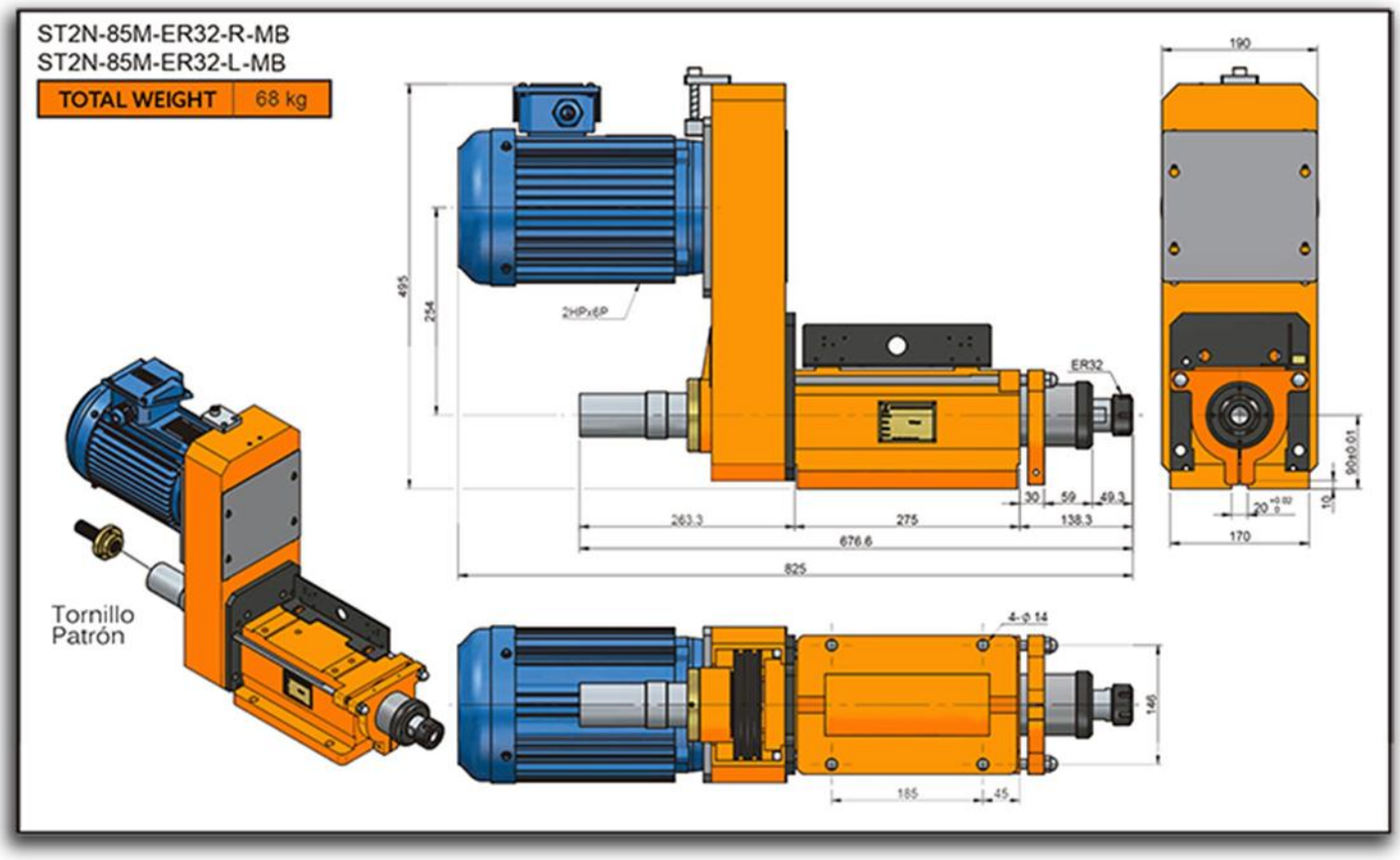
ST2N-85M-ER32-R-MB
ST2N-85M-ER32-L-MB
TOTAL WEIGHT 68 kg
Tornillo
Patrón
2HPx6P
ER32
495
254
263.3
275
676.6
825
30
59
49.3
138.3
190
170
4-ø 14
146
185
45

ST2N-85M-ER32-R-MB
ST2N-85M-ER32-L-MB

TOTAL WEIGHT	68 kg

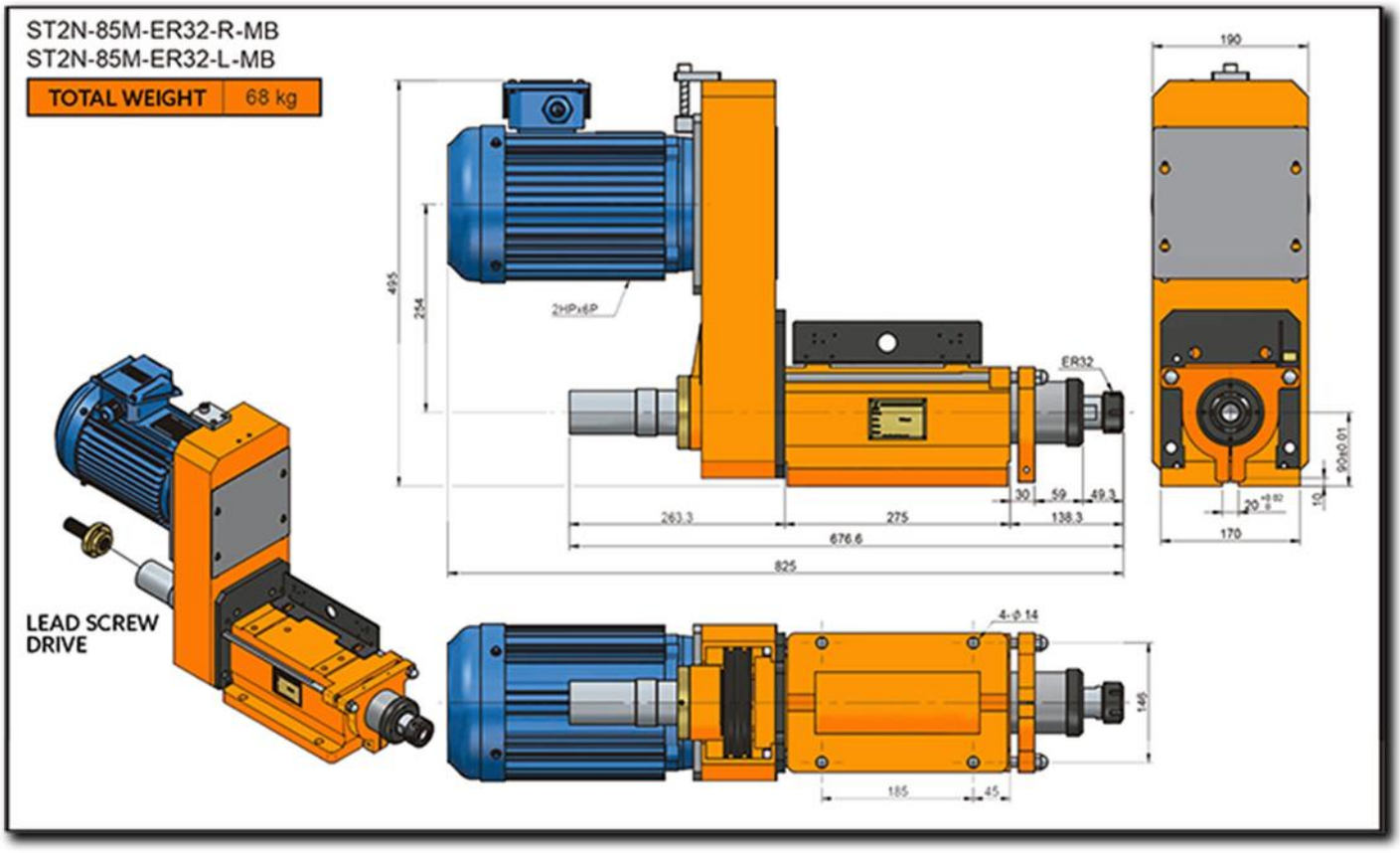

ST3N-90M

Cabezal Para Machueleado



Characteristics & Dimensions

MODEL	ST3N-90M
Tapping Capacity (S45C)	*M45*
Maximum Stroke	*90 mm (3.54")*
Thread Guide Pitch	*0.8 ~ 3.0 mm (0.031" ~ 0.118")*
Electric Motor Power (3 Phases)	*3.00 H.p. (220/440 volts)*
System Net Weight (kg)	*114.00 Kg (252 lb.)*
Spindle Bearings	*6210ZZ x 3*
Pulley Bearings	*6212ZZ x 2*
Spindle Seals	*TC60 x 90 x 10* *TC100 x 125 x 12* *TC70 x 92 x 10*
Transmission Belt	*8M x 48T x 40W* *RS40 -2-30T*

*** Roundness ≤ 0.003mm.*
**** All dimensions are given in millimeters.*

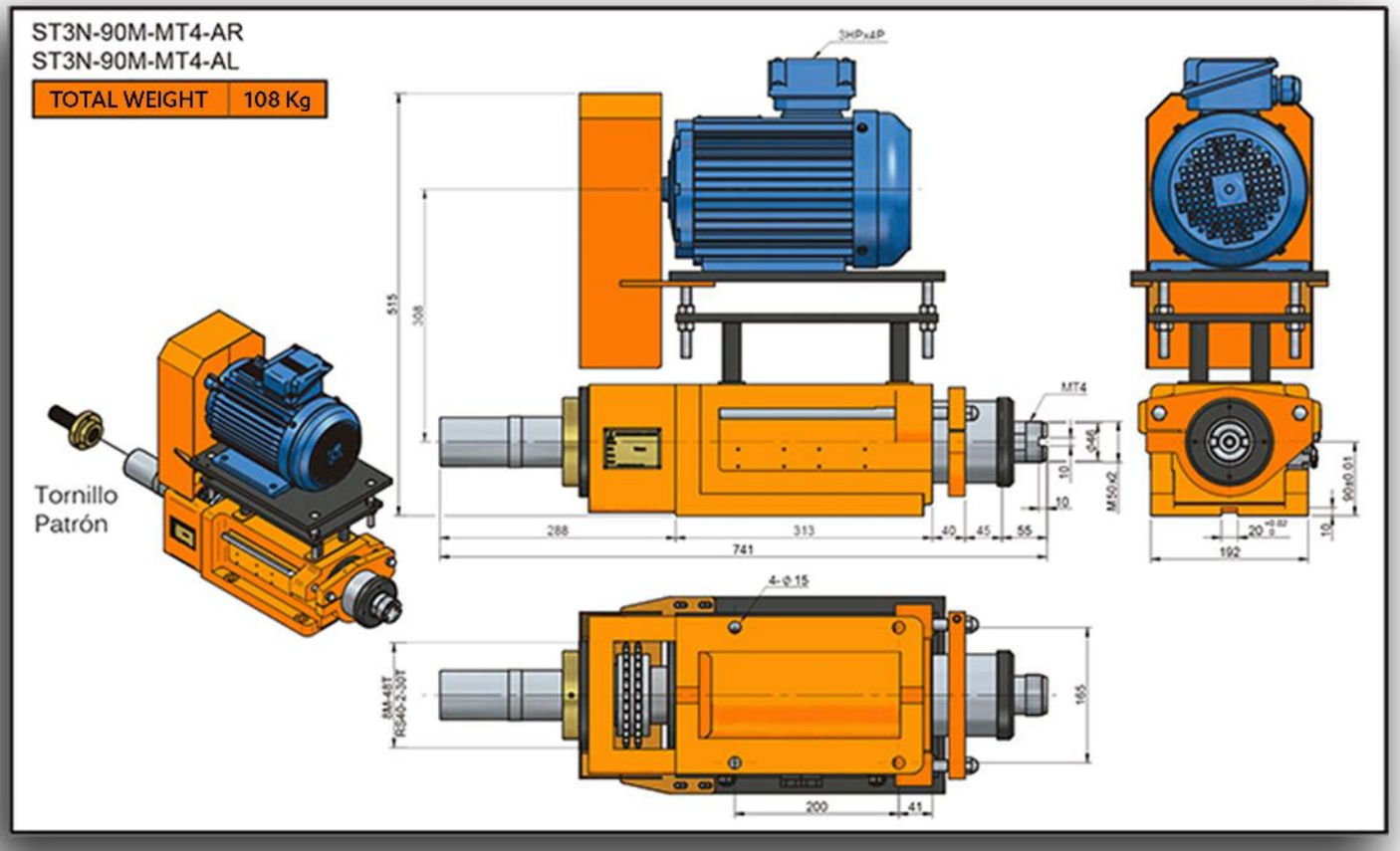
ST3N-90M-MT4-AR
ST3N-90M-MT4-AL
TOTAL WEIGHT 108 Kg
Tornillo
Patrón
MT4
288
313
741
192
200
41
165
515
308

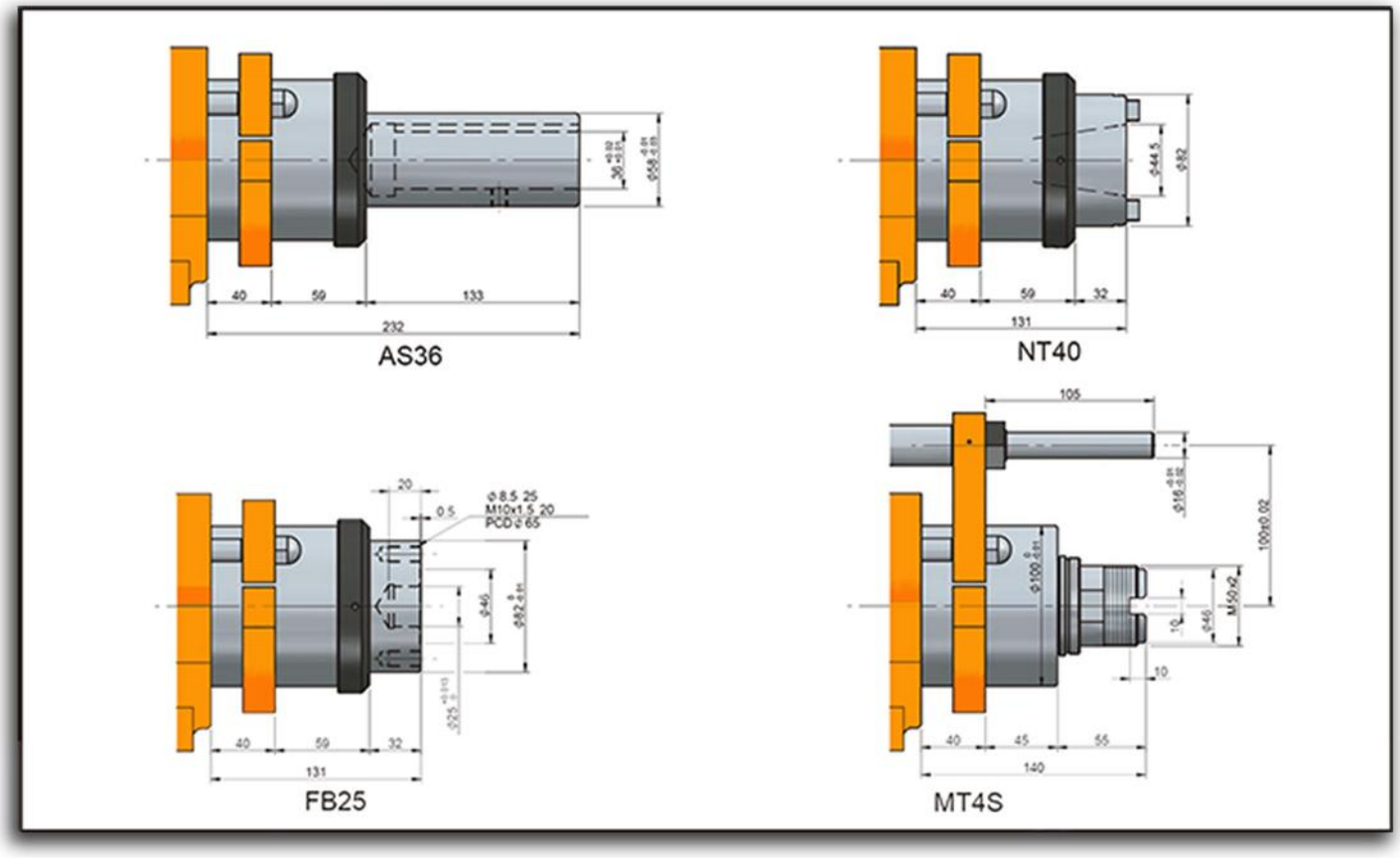
AS36
40
59
133
232
NT40
40
59
32
131
FB25
20
0.5
40
59
32
131
MT4S
105
40
45
55
140
10
10

ST & STD SERIES

MANUAL SLIDES WITH GRADUATED SCREW

ST-75A

LEAD SCREW DRIVE MANUAL SLIDE

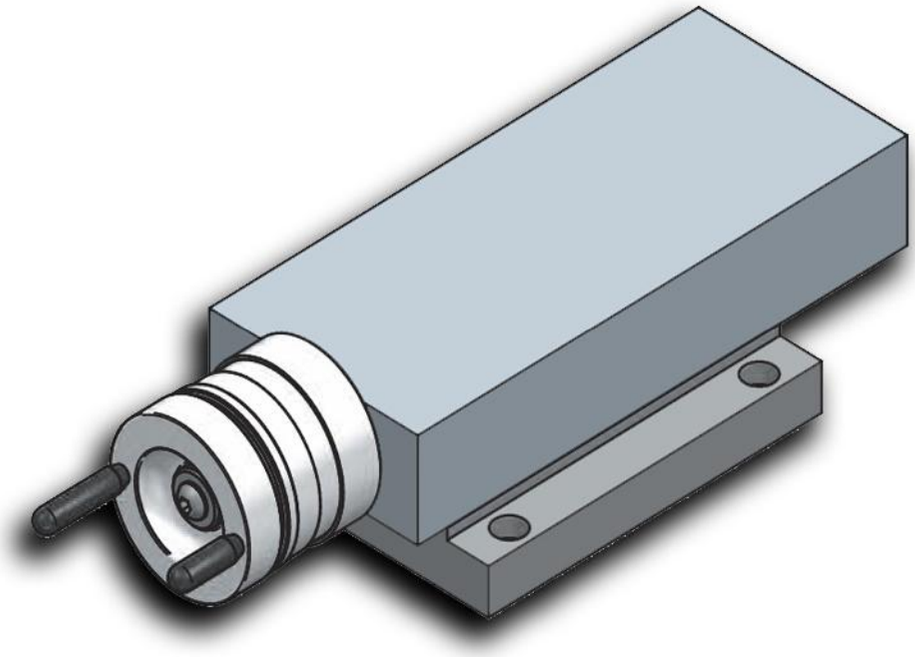

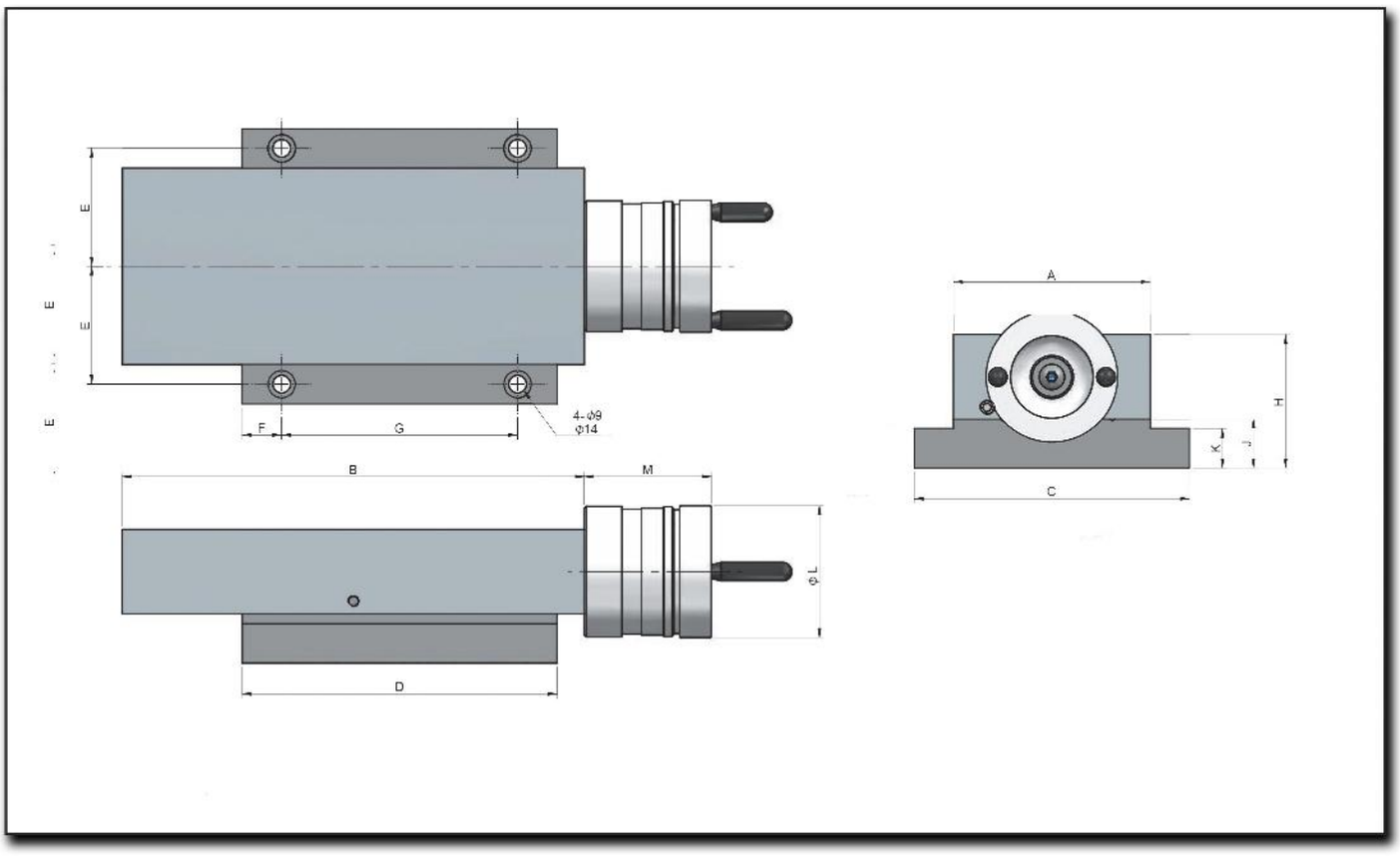
E
E
E
F
G
4-φ9
φ14
B
M
φL
D
A
H
K
J
C

Characteristics & Dimensions

MODEL	ST-75A
A x B	*75.00 x 180.00*
C x D	*105.00 x 155.00*
Maximum Slide Stroke	*75.00*
E	*45.00*
F	*32.50*
G	*90.00*
H	*60.00*
J	*20.00*
K	*15.00*
L	*Ø59*
M	*61.50*
Ball Screw	*2.0 x 0.02*
Total Device Weight (Kg)	*6.50*

***** All dimensions are given in millimeters.*

ST-100A

LEAD SCREW DRIVE MANUAL SLIDE

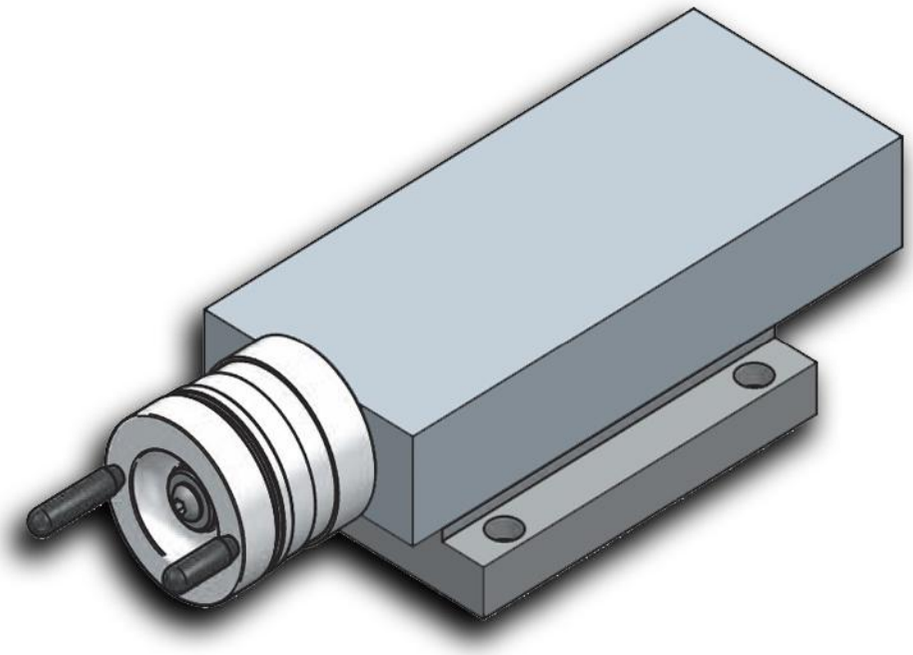

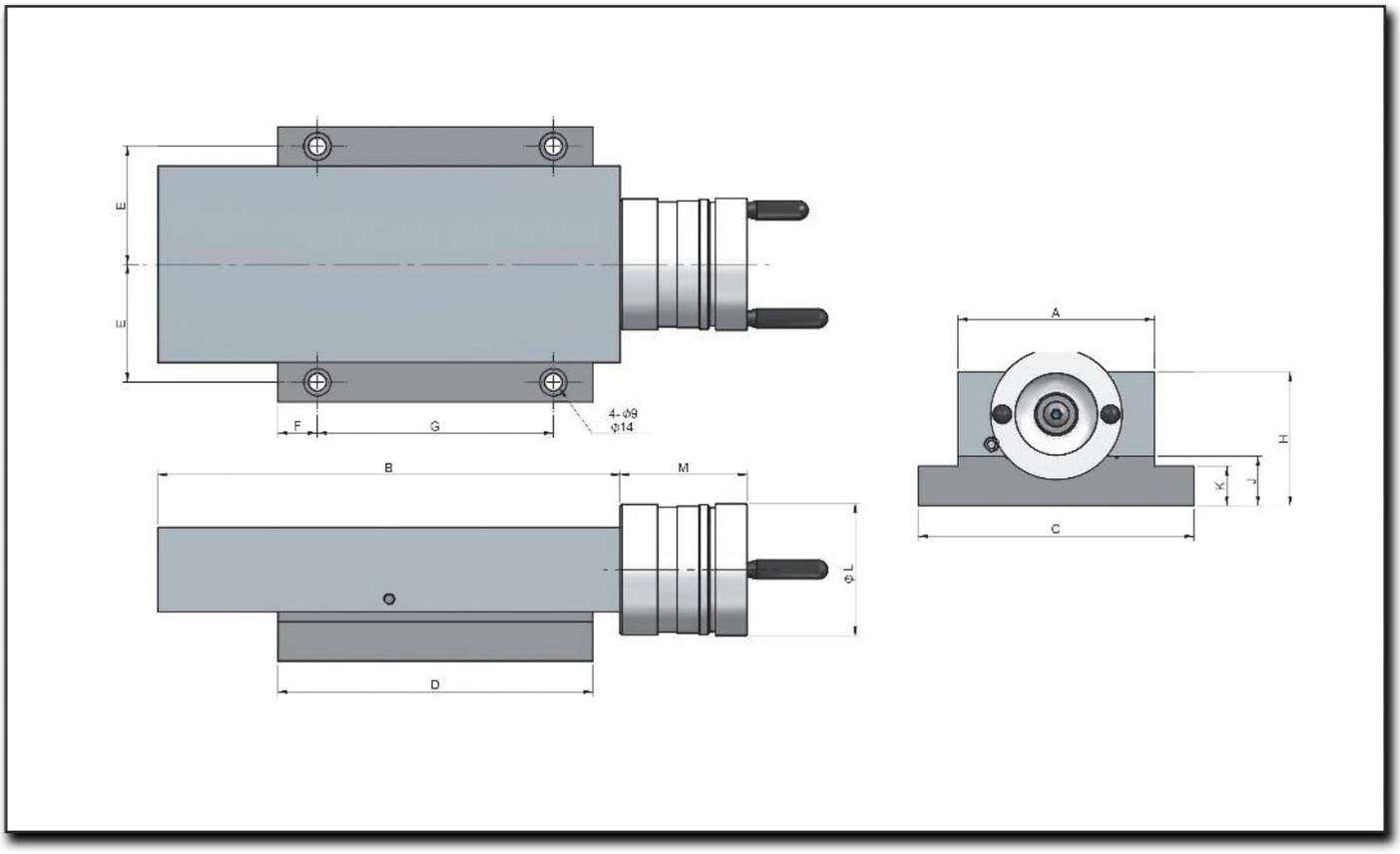
E
E
F
G
4-φθ
φ14
B
M
φL
D
A
H
K
J
C

Characteristics & Dimensions

MODEL	ST-100A
A x B	*100.00 x 235.00*
C x D	*140.00 x 160.00*
Maximum Slide Stroke	*100.00*
E	*60.00*
F	*20.00*
G	*120.00*
H	*68.00*
J	*25.00*
K	*20.00*
L	*Ø67*
M	*65.50*
Ball Screw	*2.0 x 0.02*
Total Device Weight (Kg)	*9.50*

***** All dimensions are given in millimeters.*

ST-1530A

LEAD SCREW DRIVE MANUAL SLIDE

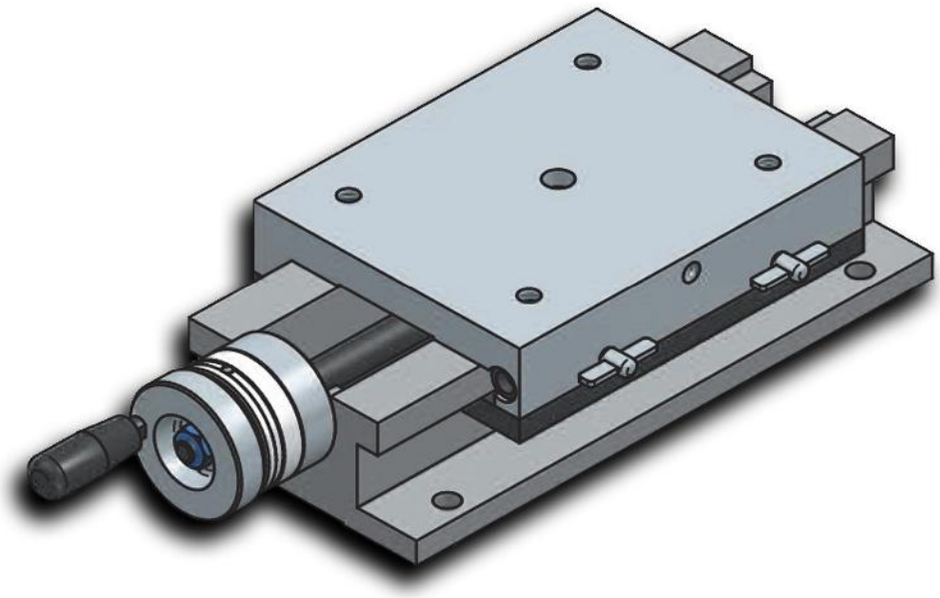

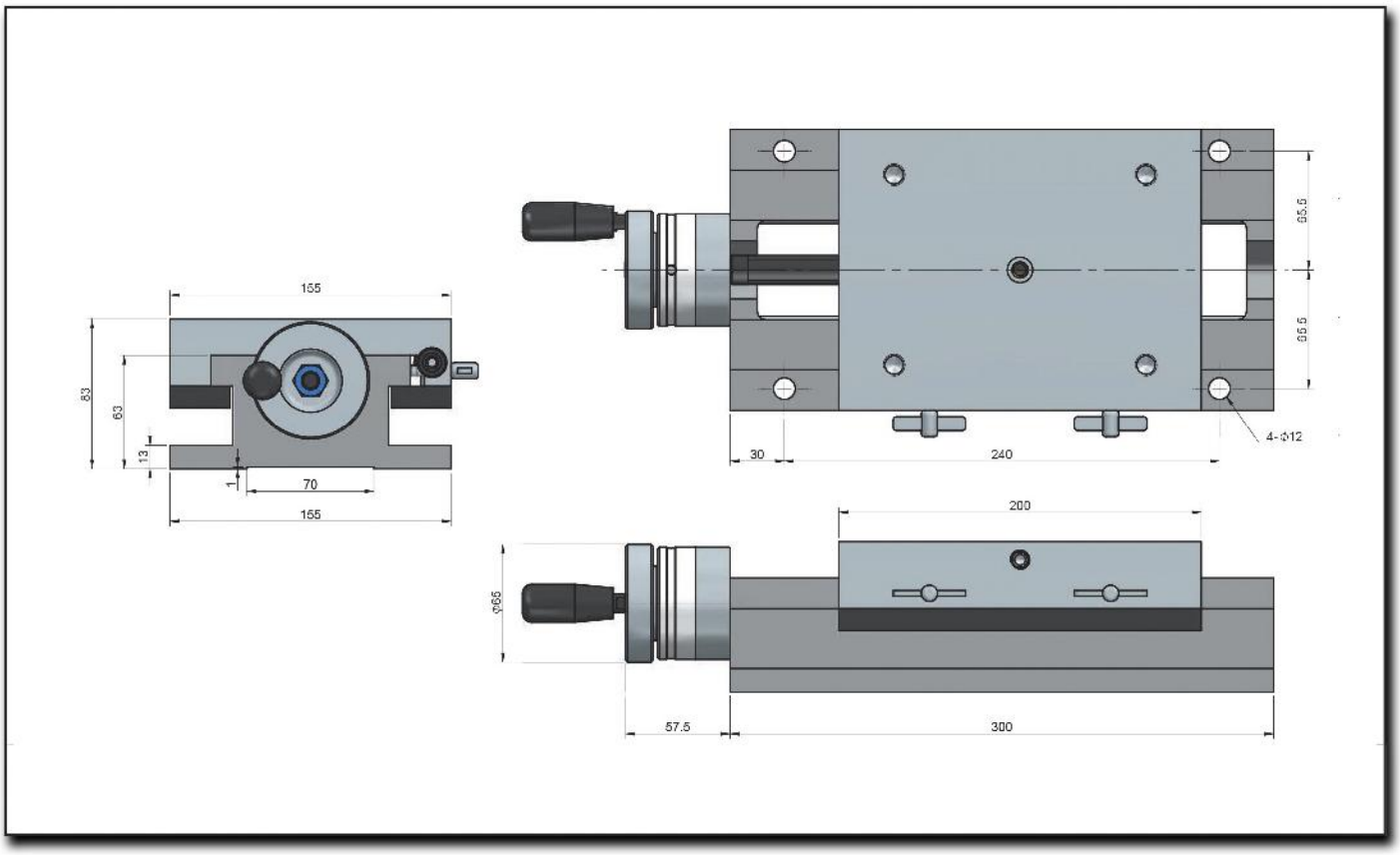
155
83
63
13
1
70
155
65.6
65.6
4-Ø12
30
240
200
Ø66
57.5
300

Characteristics & Dimensions

MODEL	ST-1530A
A x B	*155.00 x 200.00*
C x D	*155.00 x 300.00*
Mximum Slide Stroke	*100.00*
Ball Screw	*2.0 x 0.02*
Total Device Weight (Kg)	*16.00*

***** All dimensions are given in millimeters.*

ST-2040A

LEAD SCREW DRIVE MANUAL SLIDE

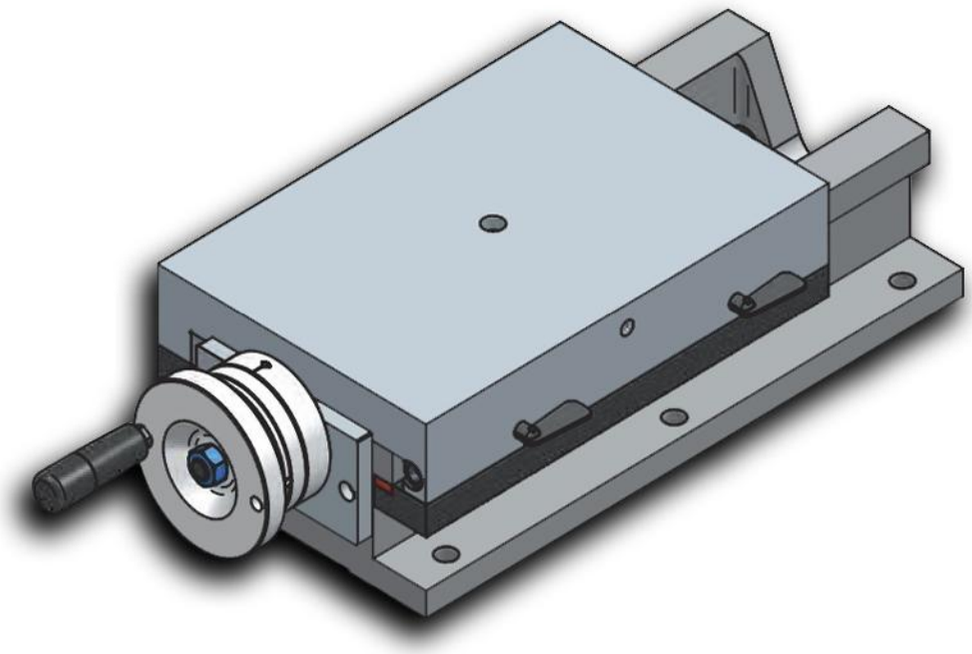

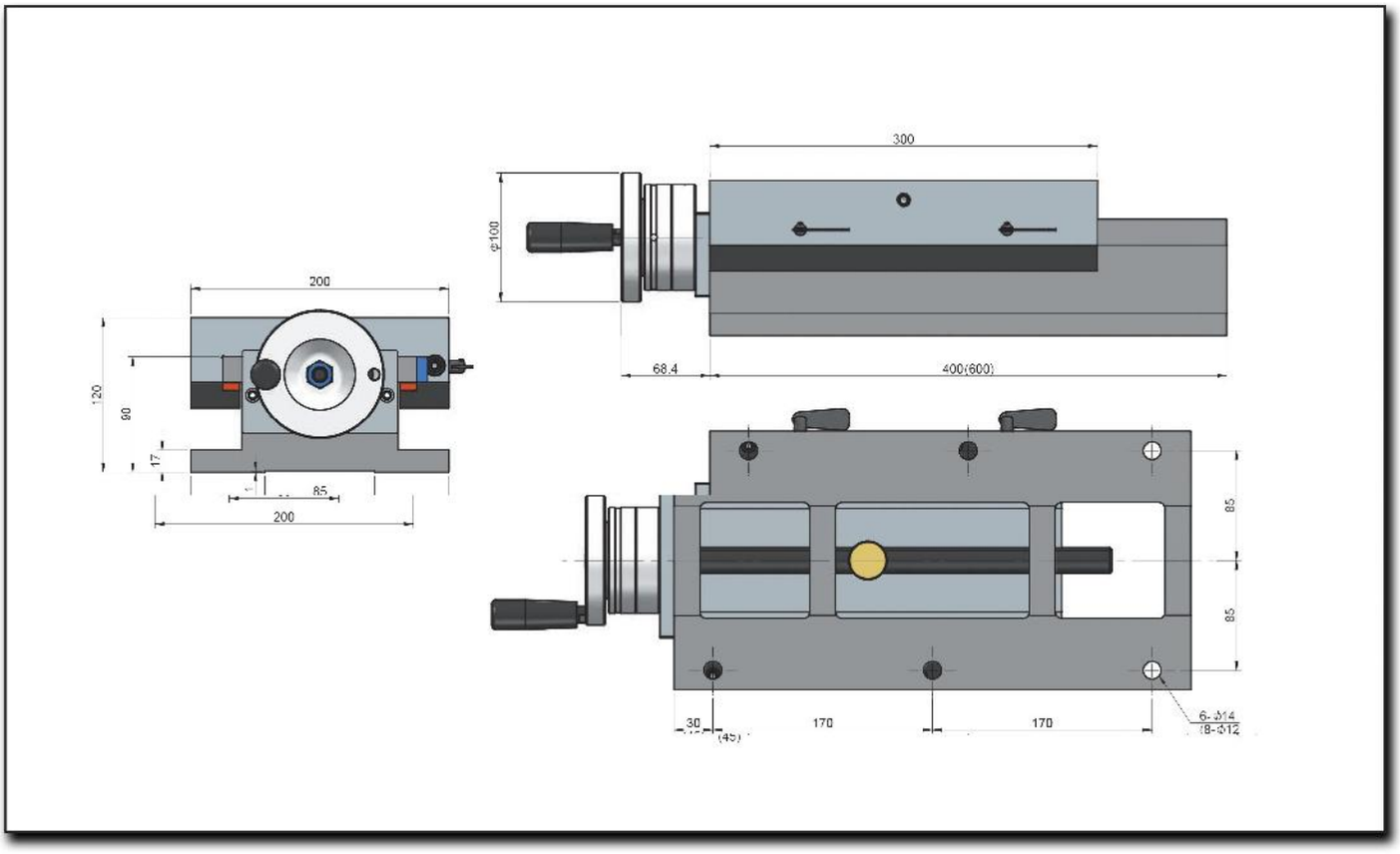
300
φ100
200
120
90
17
85
200
68.4
400(600)
85
85
30
170
170
6-Φ14
18-Φ12

Characteristics & Dimensions

MODEL	ST-2040A
A x B	*200.00 x 300.00*
C x D	*200.00 x 400.00*
Maximum Slide Stroke	*100.00*
Ball Screw	*4.0 x 0.02*
Total Device Weight (Kg)	*36.00*

***** All dimensions are given in millimeters.*

ST-2060A

LEAD SCREW DRIVE MANUAL SLIDE

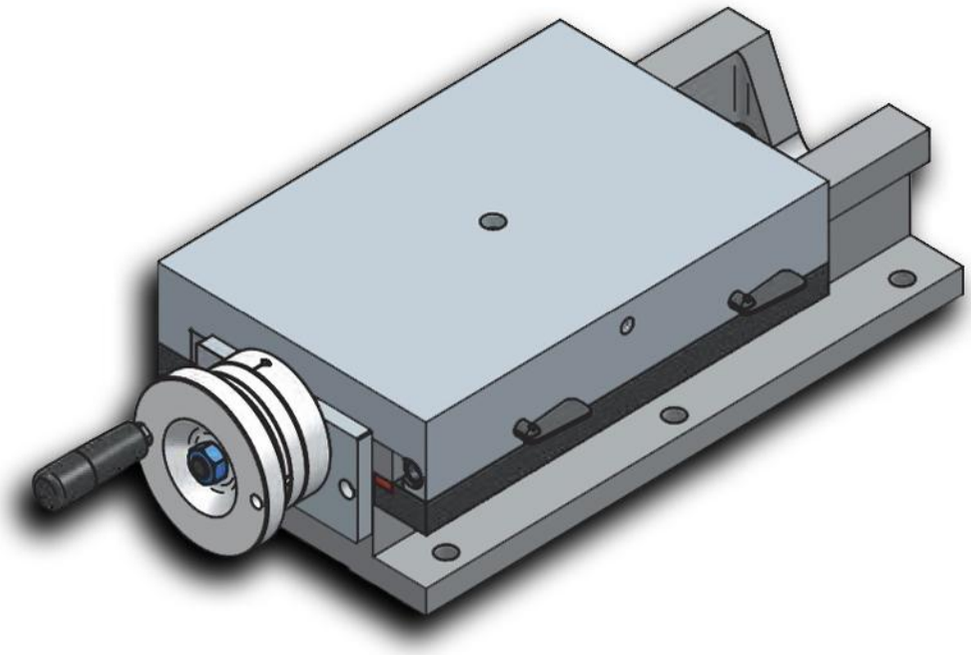

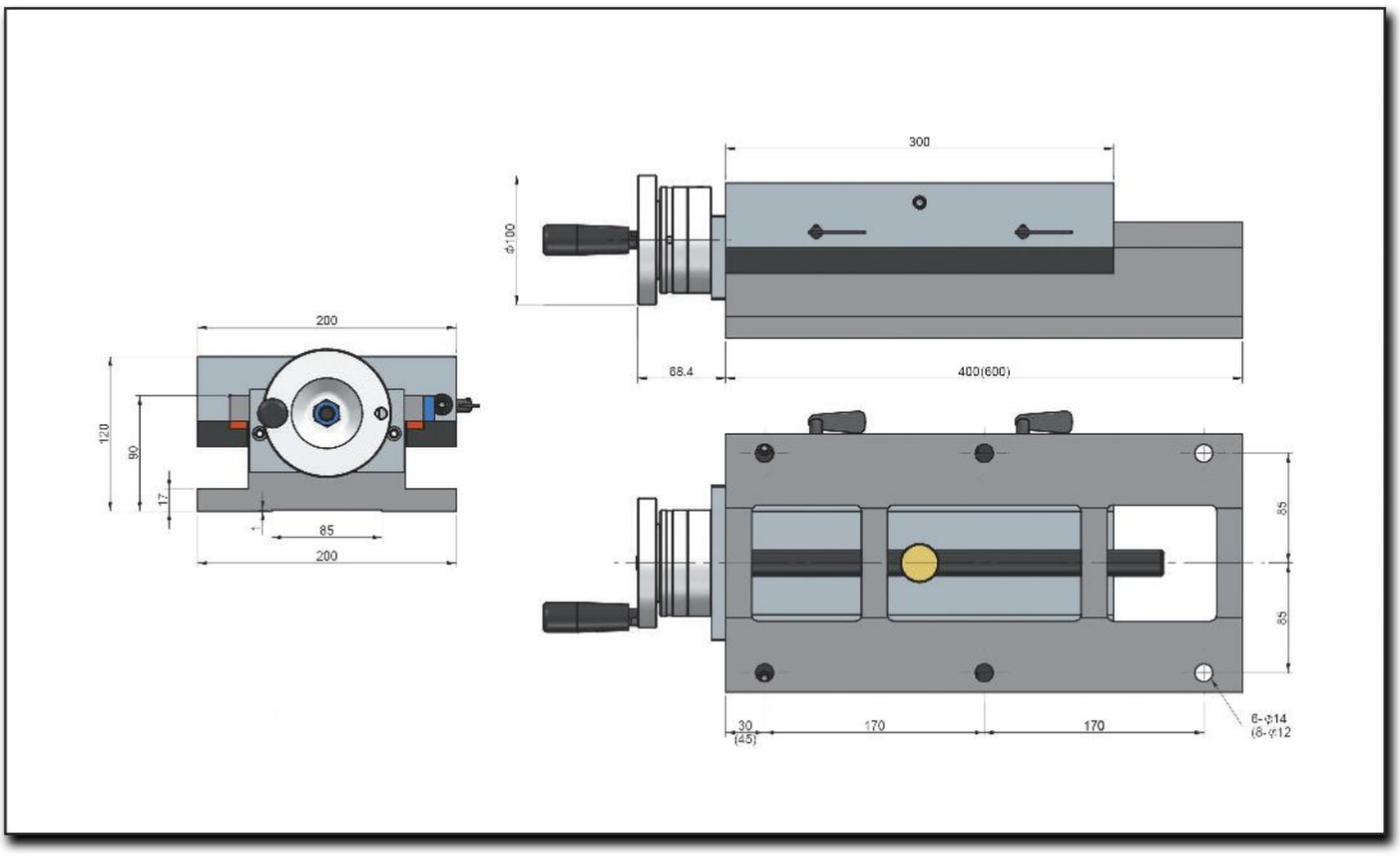
300
ϕ100
68.4
400(600)
200
120
90
17
85
200
85
85
30
(45)
170
170
6-ϕ14
(6-ϕ12

Characteristics & Dimensions

MODEL	ST-2060A
A x B	*200.00 x 300.00*
C x D	*200.00 x 600.00*
Maximum Slide Stroke	*300.00*
Ball Screw	*4.0 x 0.02*
Total Device Weight (Kg)	*47.00*

***** All dimensions are given in millimeters.*

ST-3050A

LEAD SCREW DRIVE MANUAL SLIDE

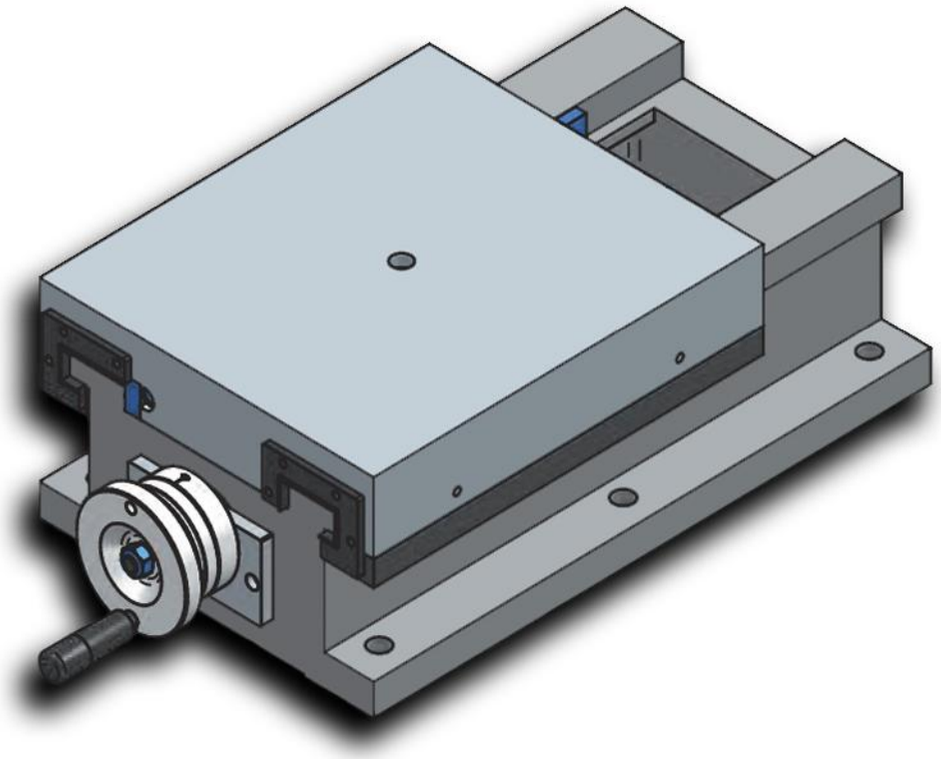

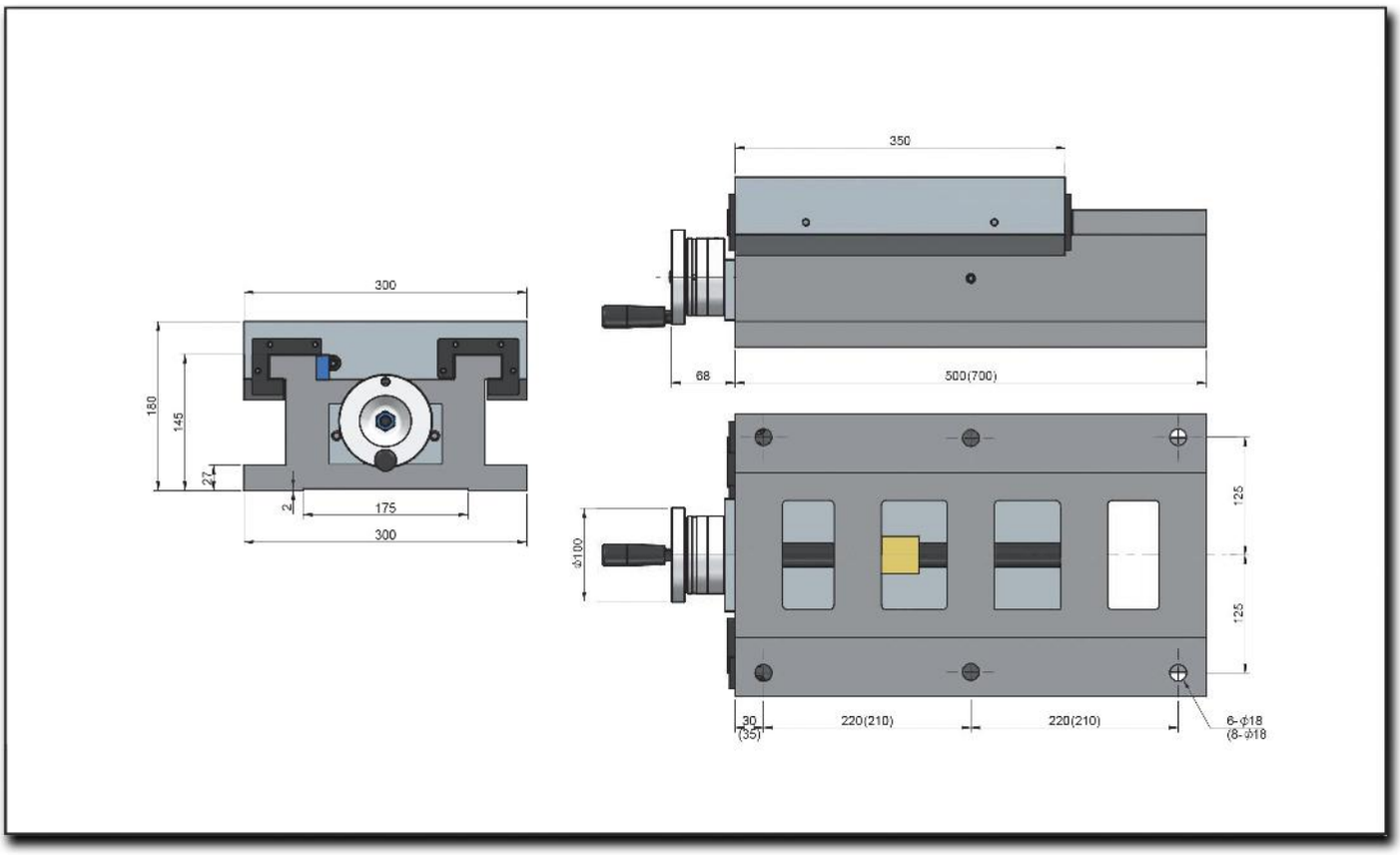
350
300
160
145
27
2
175
300
68
500(700)
φ100
125
125
30
(35)
220(210)
220(210)
6-φ18
(8-φ18

Characteristics & Dimensions

MODEL	ST-3050A
A x B	*300.00 x 350.00*
C x D	*300.00 x 500.00*
Maximum Slide Stroke	*150.00*
Ball Screw	*4.0 x 0.02*
Total Device Weight (Kg)	*93.00*

***** All dimensions are given in millimeters.*

ST-3070A

LEAD SCREW DRIVE MANUAL SLIDE

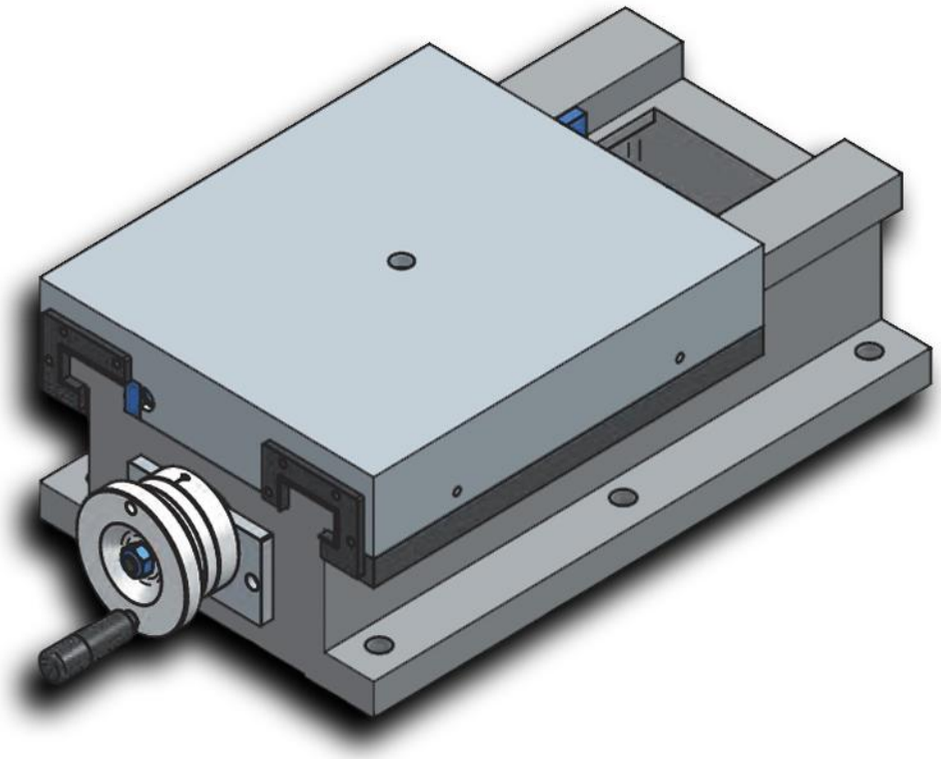

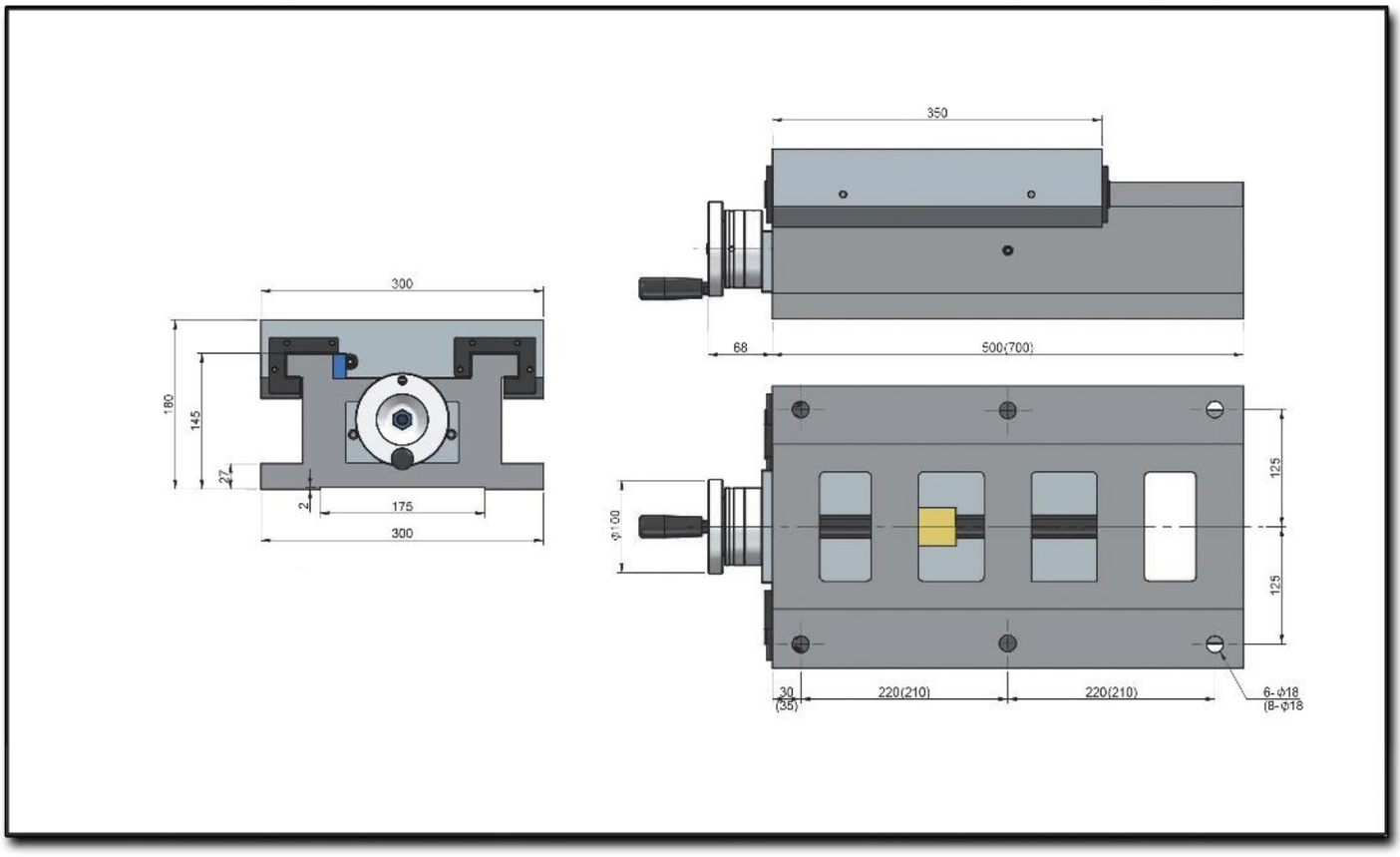
350
300
180
145
27
2
175
300
68
500(700)
125
125
Φ100
30
(35)
220(210)
220(210)
6-Φ18
(8-Φ18

Characteristics & Dimensions

MODEL	ST-3070A
A x B	*300.00 x 350.00*
C x D	*300.00 x 700.00*
Maximum Slide Stroke	*350.00*
Ball Screw	*4.0 x 0.02*
Total Device Weight (Kg)	*115.00*

***** All dimensions are given in millimeters.*

STD-1530

LEAD SCREW DRIVE MANUAL SLIDE

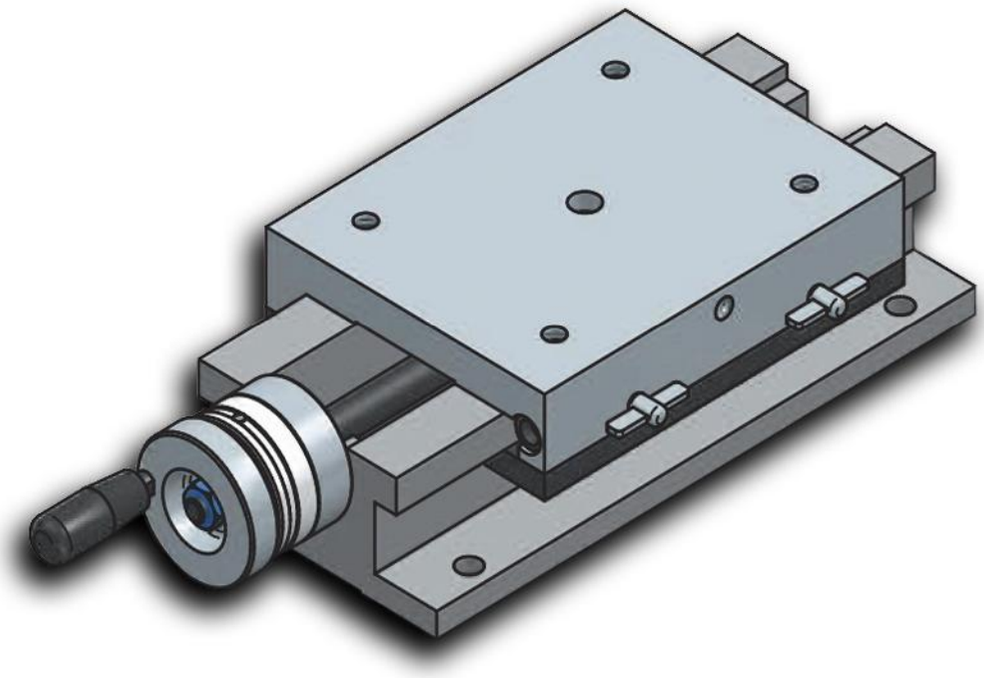

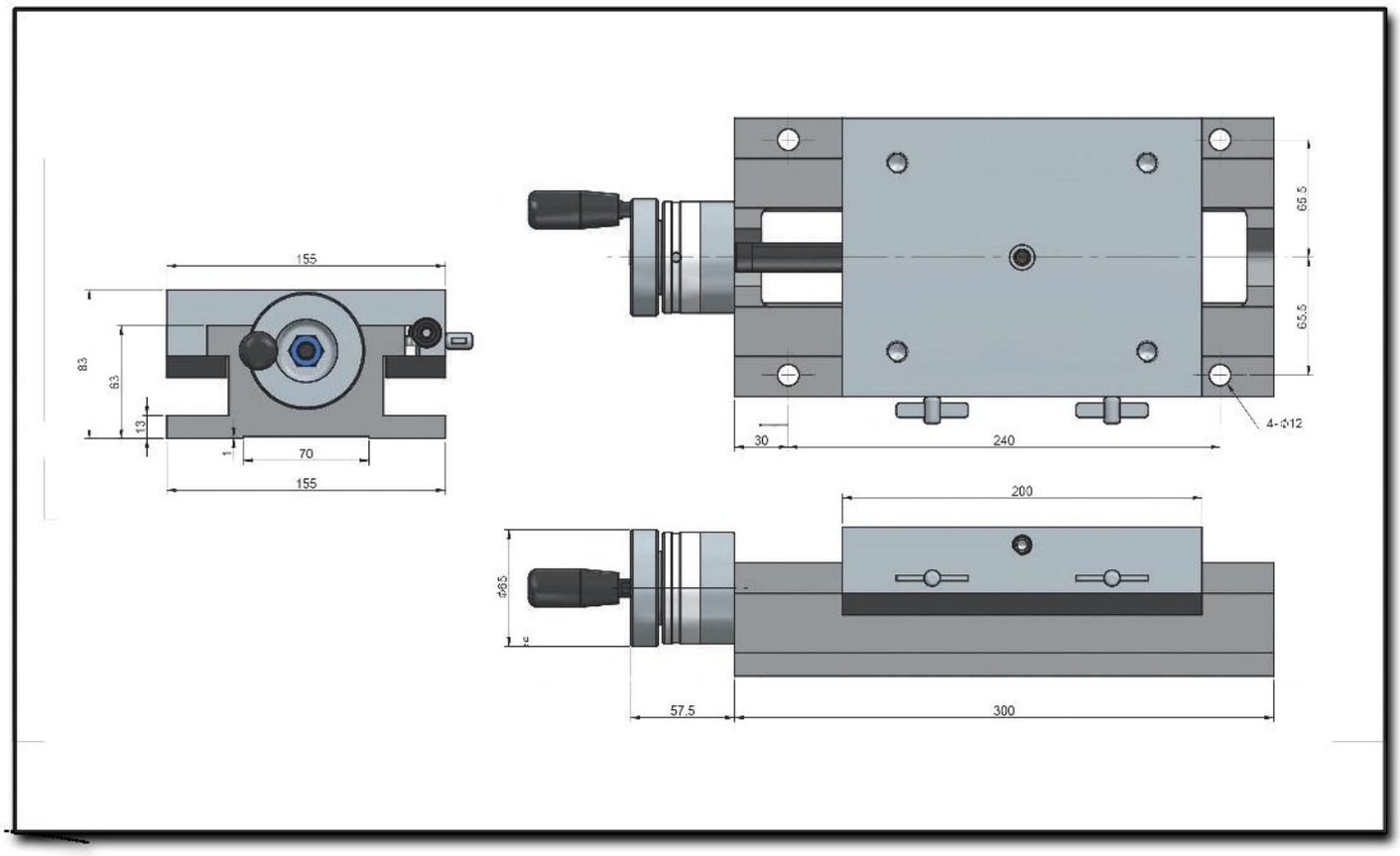
155
83
63
13
1
70
155
66.5
65.5
4-Φ12
30
240
200
Φ65
57.5
300

Characteristics & Dimensions

MODEL	STD-1530
A x B	*150.00 x 200.00*
C x D	*150.00 x 300.00*
Maximum Slide Stroke	*100.00*
Ball Screw	*2.0 x 0.01*
Total Device Weight (Kg)	*20.00*

***** All dimensions are given in millimeters.*

STD-2020

LEAD SCREW DRIVE MANUAL SLIDE

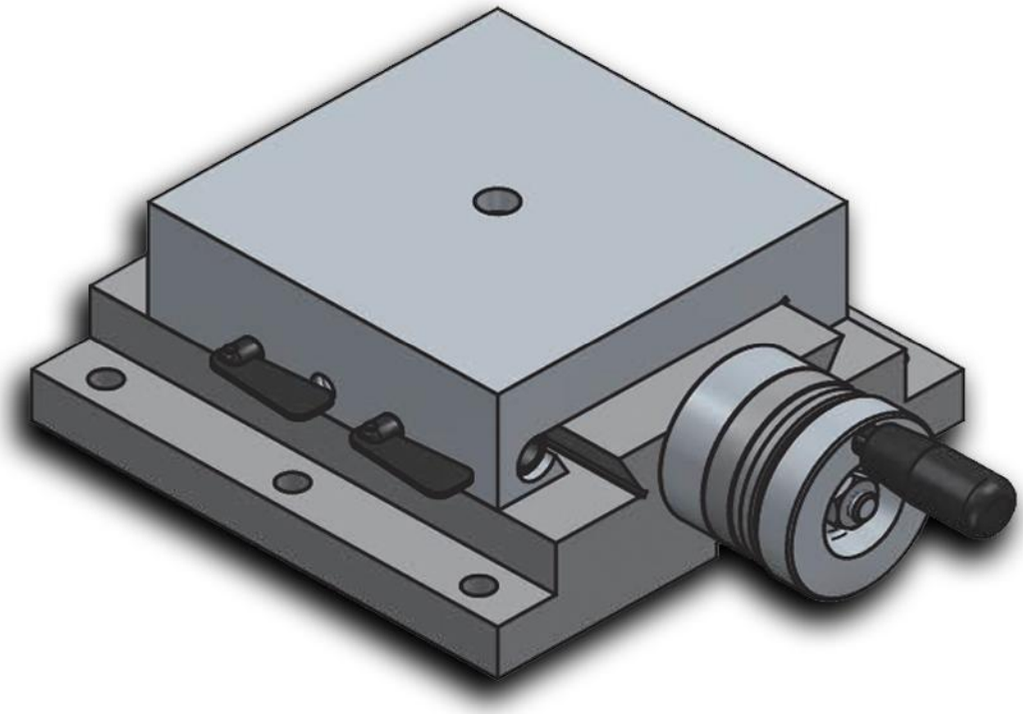

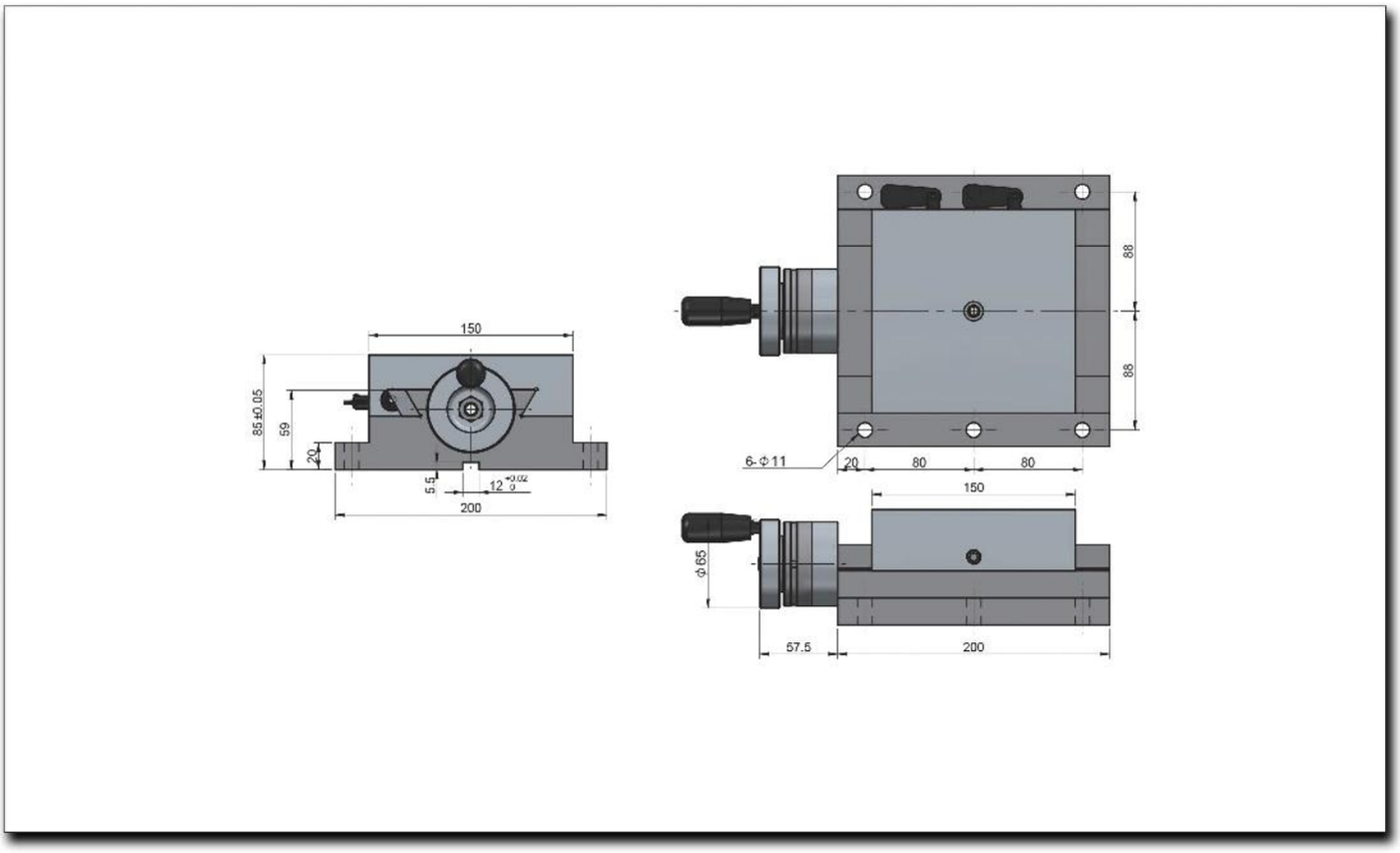
150
85±0.05
59
20
5.5
12
200
88
88
6-Φ11
20
80
80
150
Φ65
57.5
200

Characteristics & Dimensions

MODEL	STD-2020
A x B	*150.00 x 150.00*
C x D	*200.00 x 200.00*
Maximum Slide Stroke	*50.00*
Ball Screw	*2.0 x 0.01*
Total Device Weight (Kg)	*26.00*

***** All dimensions are given in millimeters.*

STD-2040

LEAD SCREW DRIVE MANUAL SLIDE

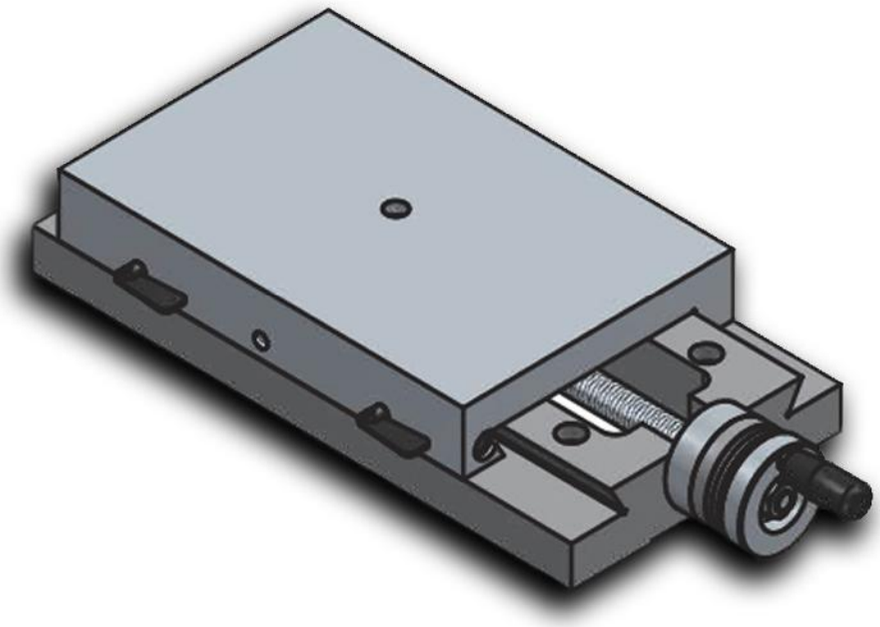

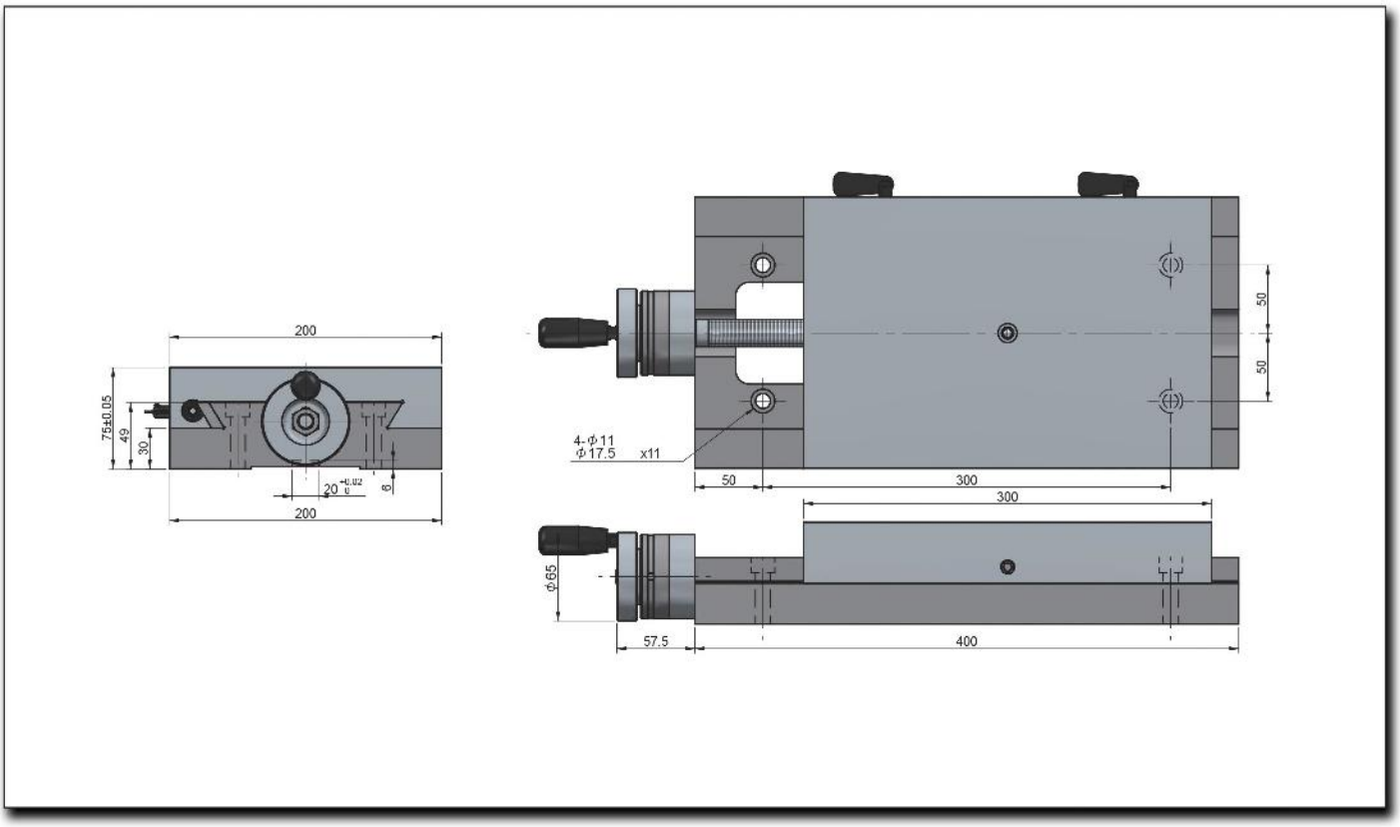
200
75±0.05
49
30
20
6
200
4-Φ11
Φ17.5
x11
50
50
300
300
Φ65
57.5
400

Characteristics & Dimensions

MODEL	STD-2040
A x B	*200.00 x 300.00*
C x D	*200.00 x 400.00*
Maximum Slide Stroke	*100.00*
Ball Screw	*4.00 x 0.02*
Total Device Weight (Kg)	*35.00*

***** All dimensions are given in millimeters.*

STD-3035

LEAD SCREW DRIVE MANUAL SLIDE

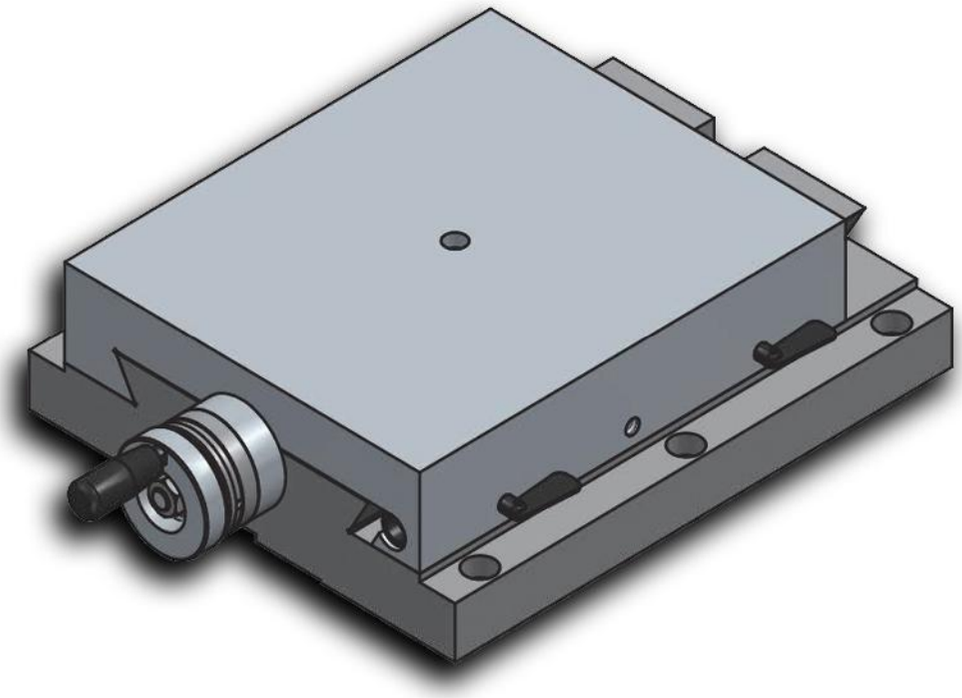

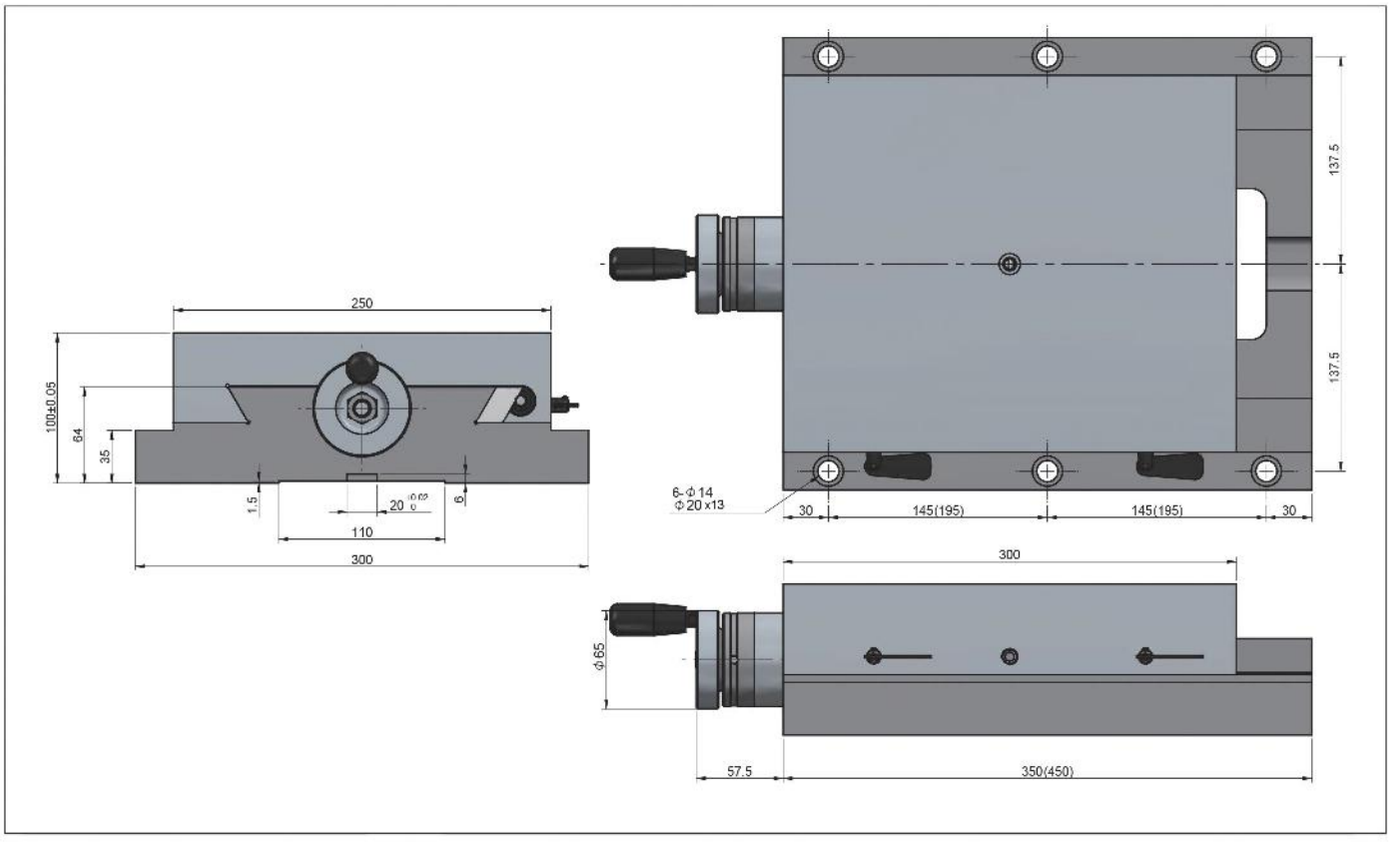
250
100±0.05
64
35
1.5
20
6
110
300
137.5
137.5
6-Φ14
Φ20x13
30
145(195)
145(195)
30
300
Φ65
57.5
350(450)

Characteristics & Dimensions

MODEL	STD-3035
A x B	*250.00 x 300.00*
C x D	*300.00 x 350.00*
Maximum Slide Stroke	*50.00*
Ball Screw	*4.00 x 0.02*
Total Device Weight (Kg)	*52.00*

***** All dimensions are given in millimeters.*

STD-3045

LEAD SCREW DRIVE MANUAL SLIDE

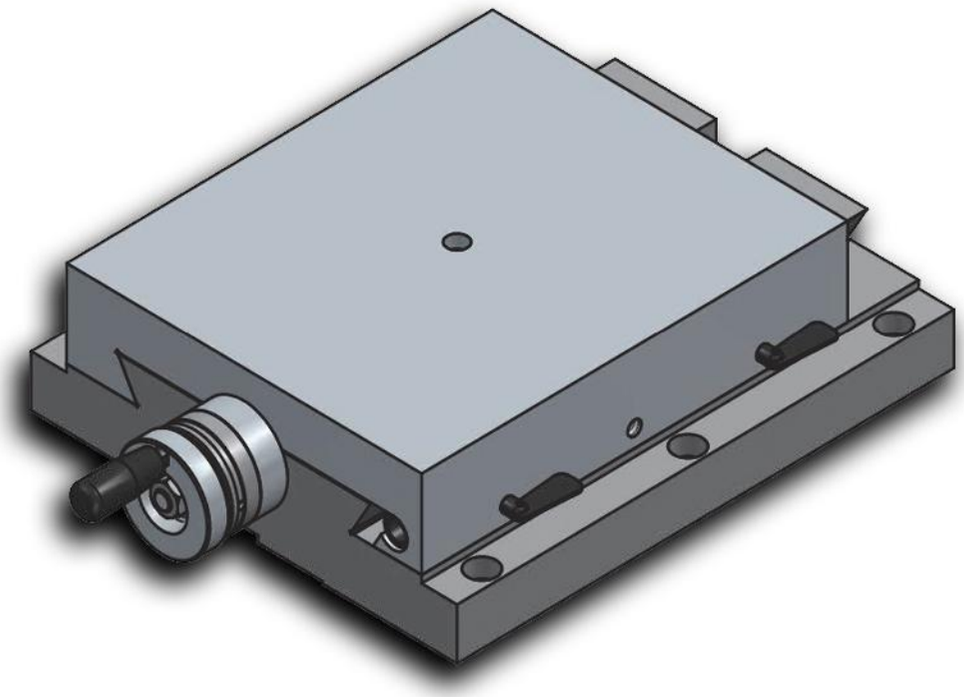

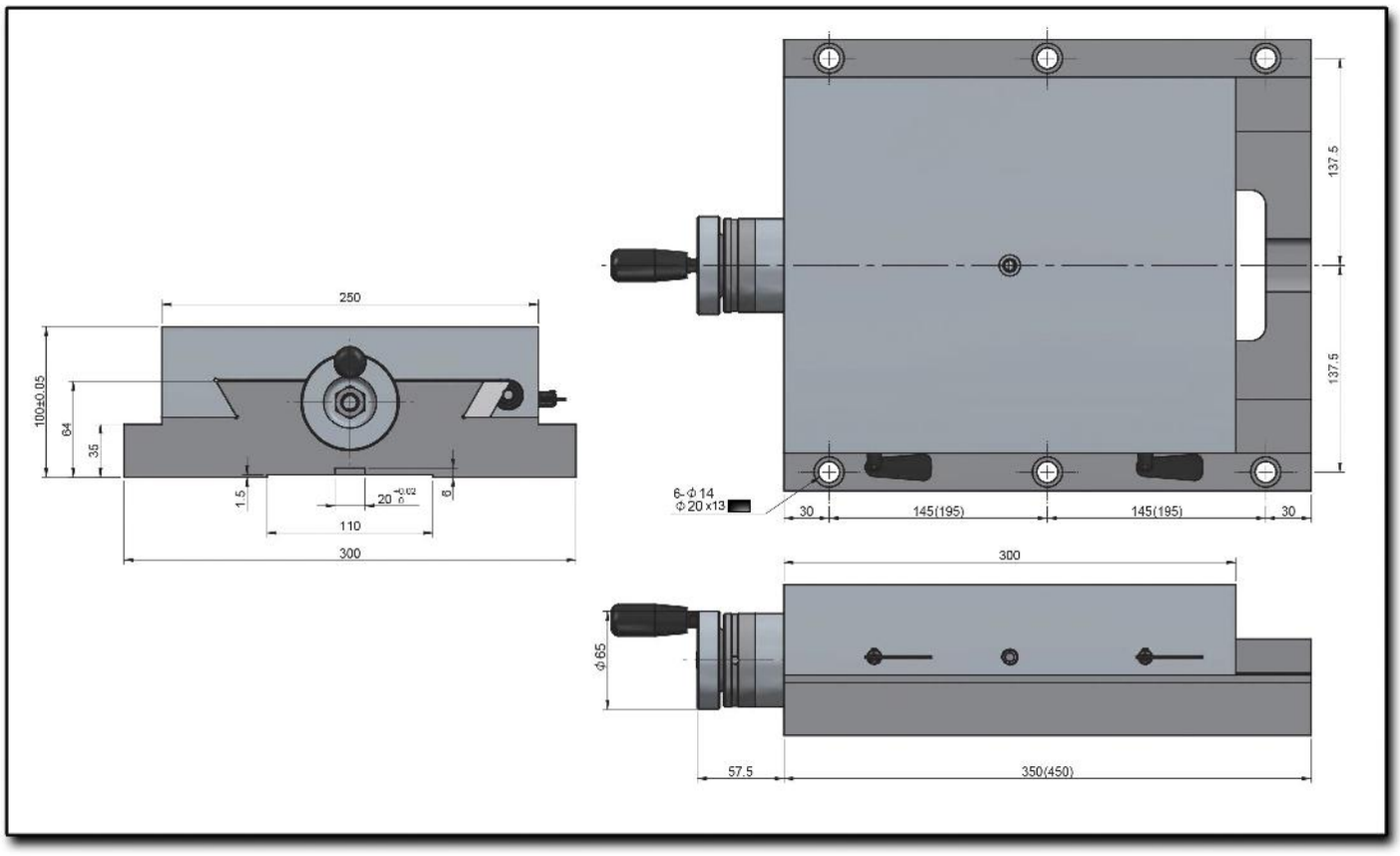
250
100±0.05
64
35
1.5
110
300
137.5
137.5
6-Φ 14
Φ 20 x13
30
145(195)
145(195)
30
300
Φ65
57.5
350(450)

Characteristics & Dimensions

MODEL	STD-3045
A x B	*250.00 x 300.00*
C x D	*300.00 x 450.00*
Maximum Slide Stroke	*150.00*
Ball Screw	*4.00 x 0.02*
Total Device Weight (Kg)	*56.00*

***** All dimensions are given in millimeters.*

STD-3650

LEAD SCREW DRIVE MANUAL SLIDE

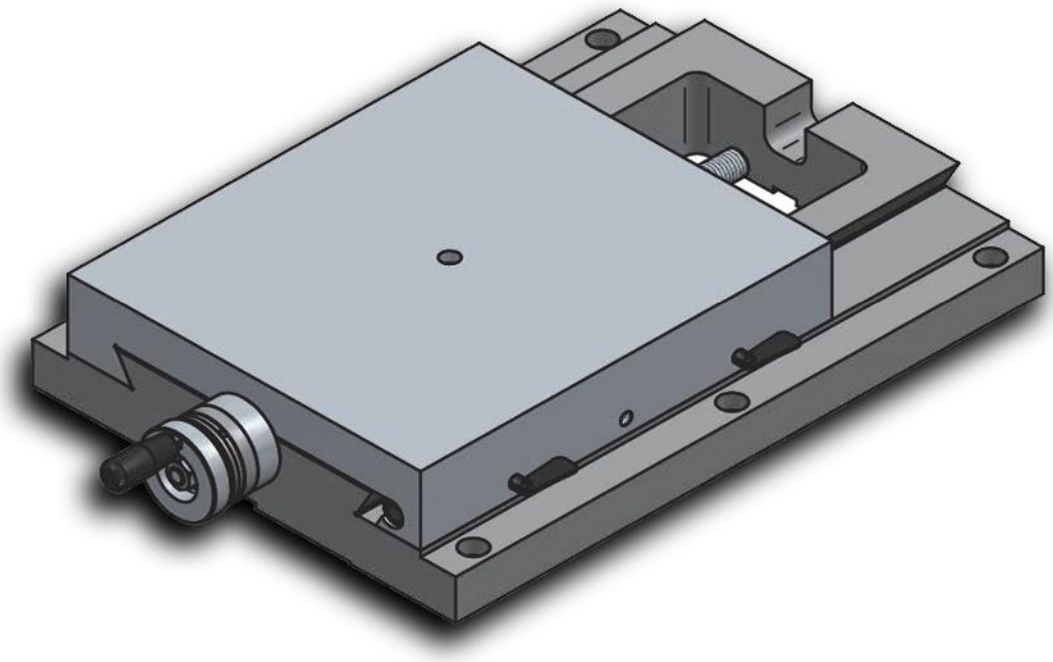

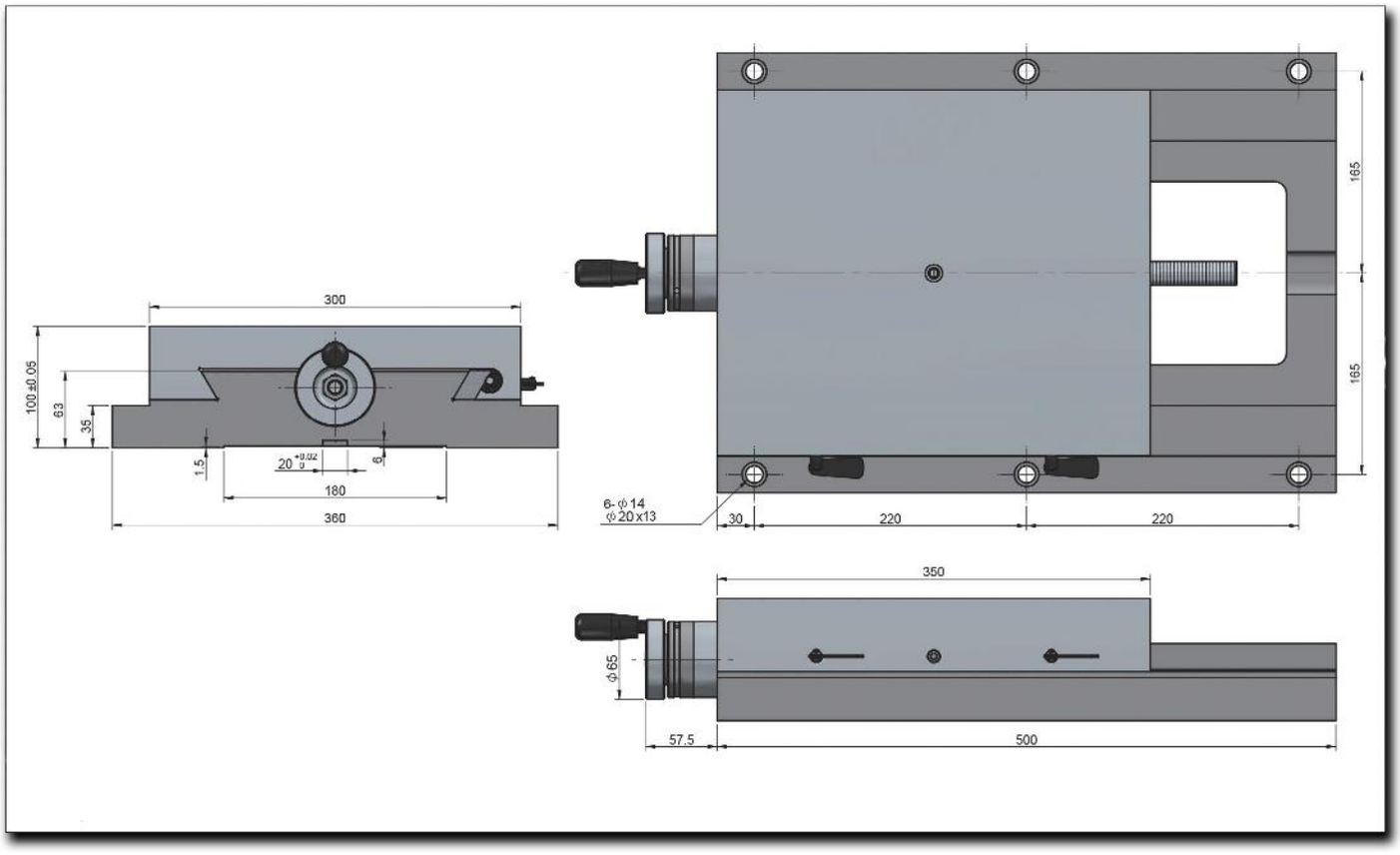
300
100±0.05
63
35
1.5
20 +0.02 0
6
180
360
6-φ14
φ20x13
30
220
220
165
165
350
φ65
57.5
500

Characteristics & Dimensions

MODEL	STD-3650
A x B	*300.00 x 350.00*
C x D	*360.00 x 500.00*
Maximum Slide Stroke	*150.00*
Ball Screw	*4.00 x 0.02*
Total Device Weight (Kg)	*72.00*

***** All dimensions are given in millimeters.*

SWHI SERIES

CNC HYDRAULIC GEAR COUPLING INDEXING TABLE

SWHI-255

CNC Hydraulic Gear Coupling Indexing Table

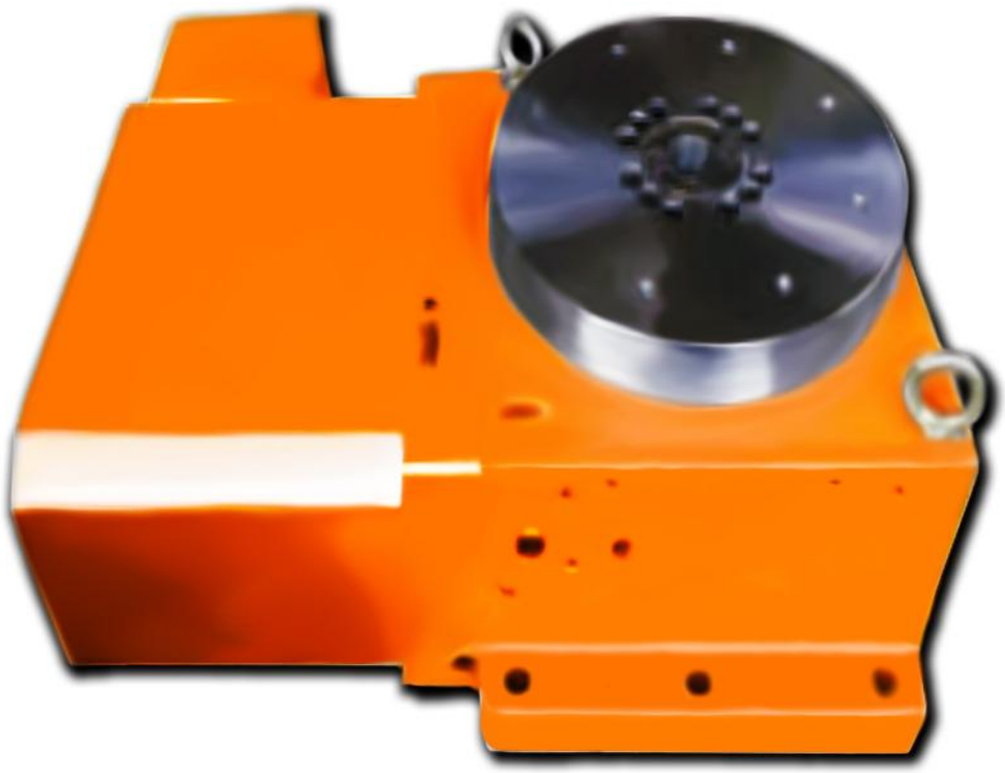

SWHI-255

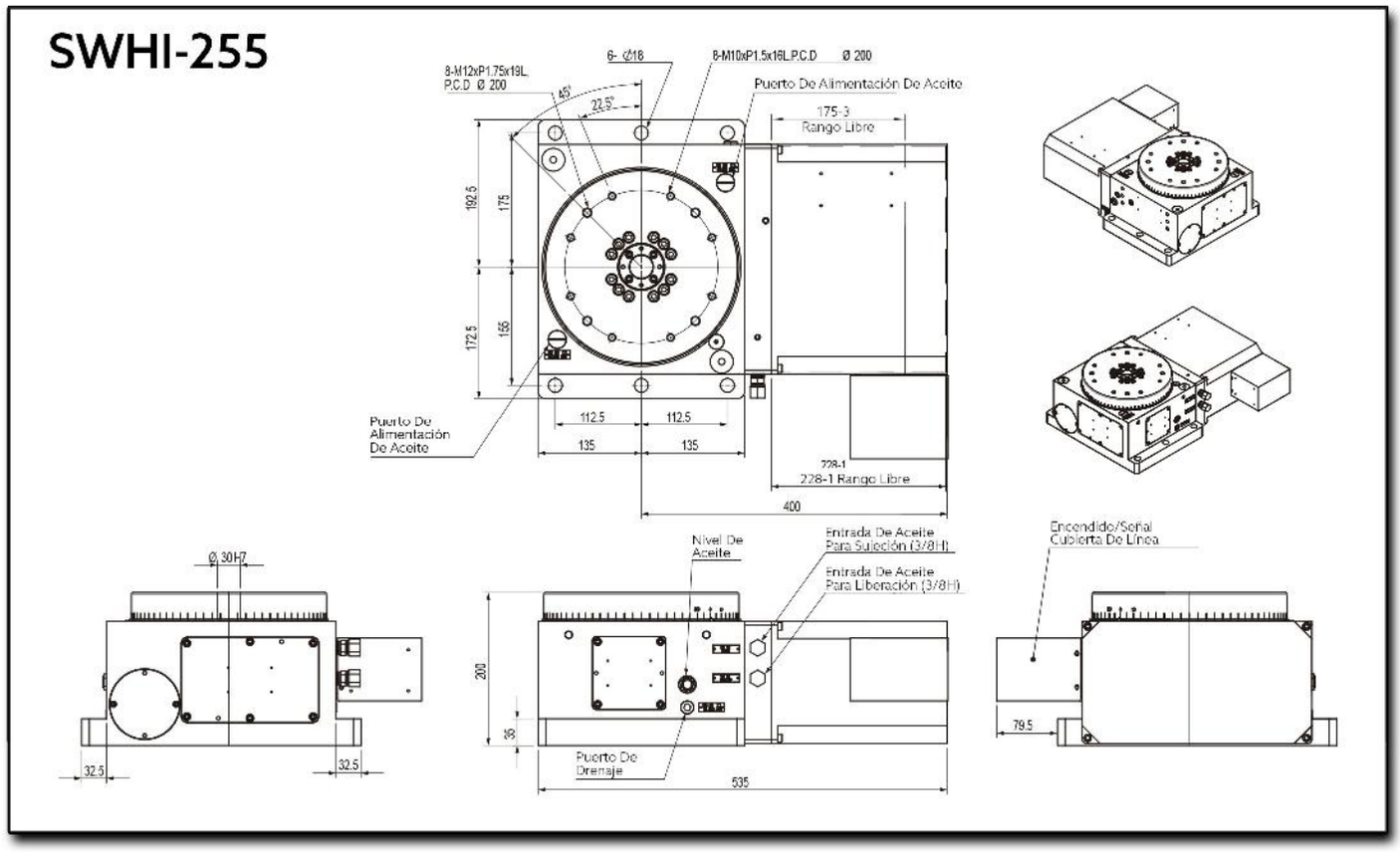
8-M12xP1.75x19L
P.C.D Ø 200
6- Ø18
8-M10xP1.5x16L P.C.D Ø 200
Puerto De Alimentación De Aceite
45°
22.5°
175-3
Rango Libre
192.5
175
172.5
155
112.5
112.5
135
135
Puerto De
Alimentación
De Aceite
228-1
228-1 Rango Libre
400
Ø 30H7
32.5
32.5
Nivel De
Aceite
Entrada De Aceite
Para Sujeción (3/8H)
Entrada De Aceite
Para Liberación (3/8H)
200
35
Puerto De
Drenaje
535
Encendido/Señal
Cubierta De Línea
79.5

Characteristics & Dimensions

MODEL	SWHI-255	
Table Diameter	Ø 255.00	
Height Of Table *(Horizontally)*	200.00	
Through-Hole Diameter	Ø30 H7	
Clamping Method *(Oil Pressure)(Kg7cm²)*	35.00	
Speed Reduction Ratio	1 : 120	
Maximum Speed Table *(4,000 r.p.m)*	33.30	
Allowable Workpiece Load *(Kg)*	250.00	
Minimum Increment *(deg.)*	1° / 5° / 15°	
Indexing Accuracy *(sec.)*	± 5.00	
Repeatability *(sec.)*	± 1.00	
Clamping Torque *(Nm)*	1,750.00	
Servo Motor Model *(Suggested)*	FANUC	α4i / β8is
	MITSUBISHI	HF-154S
Worm Allowable Torque *(Nm)*	250.00	
Total Weight *(Without Servo Motor)(Kg)*	125.00	

***** All dimensions are given in millimeters.

SWHI-400

CNC Hydraulic Gear Coupling Indexing Table

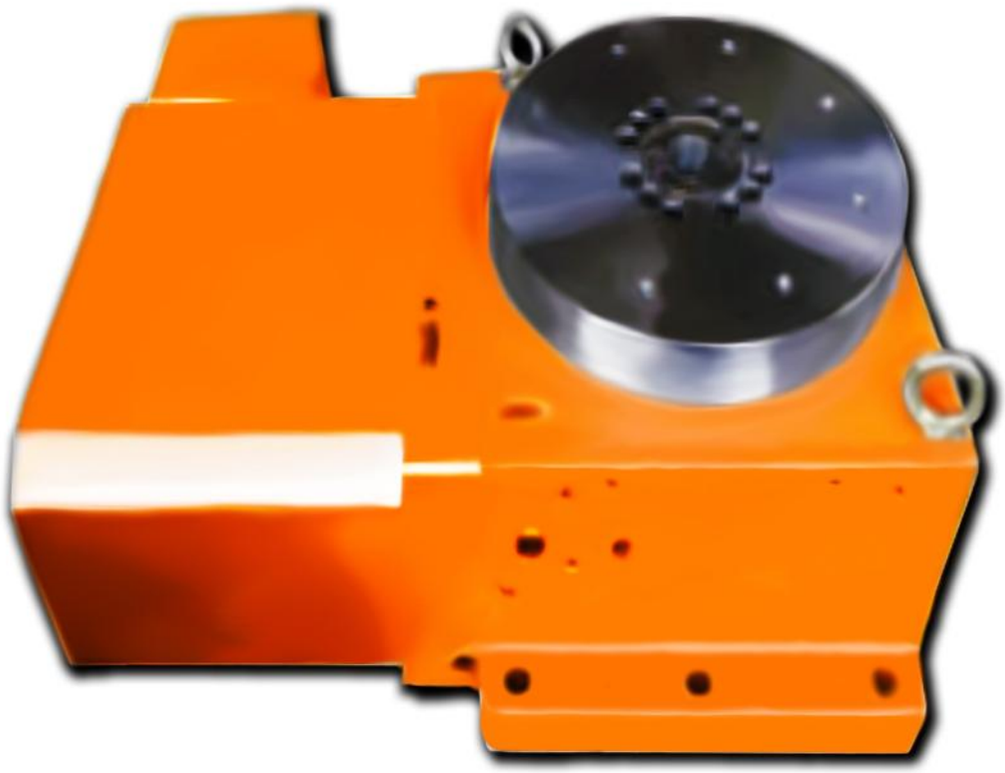

SWHI-400

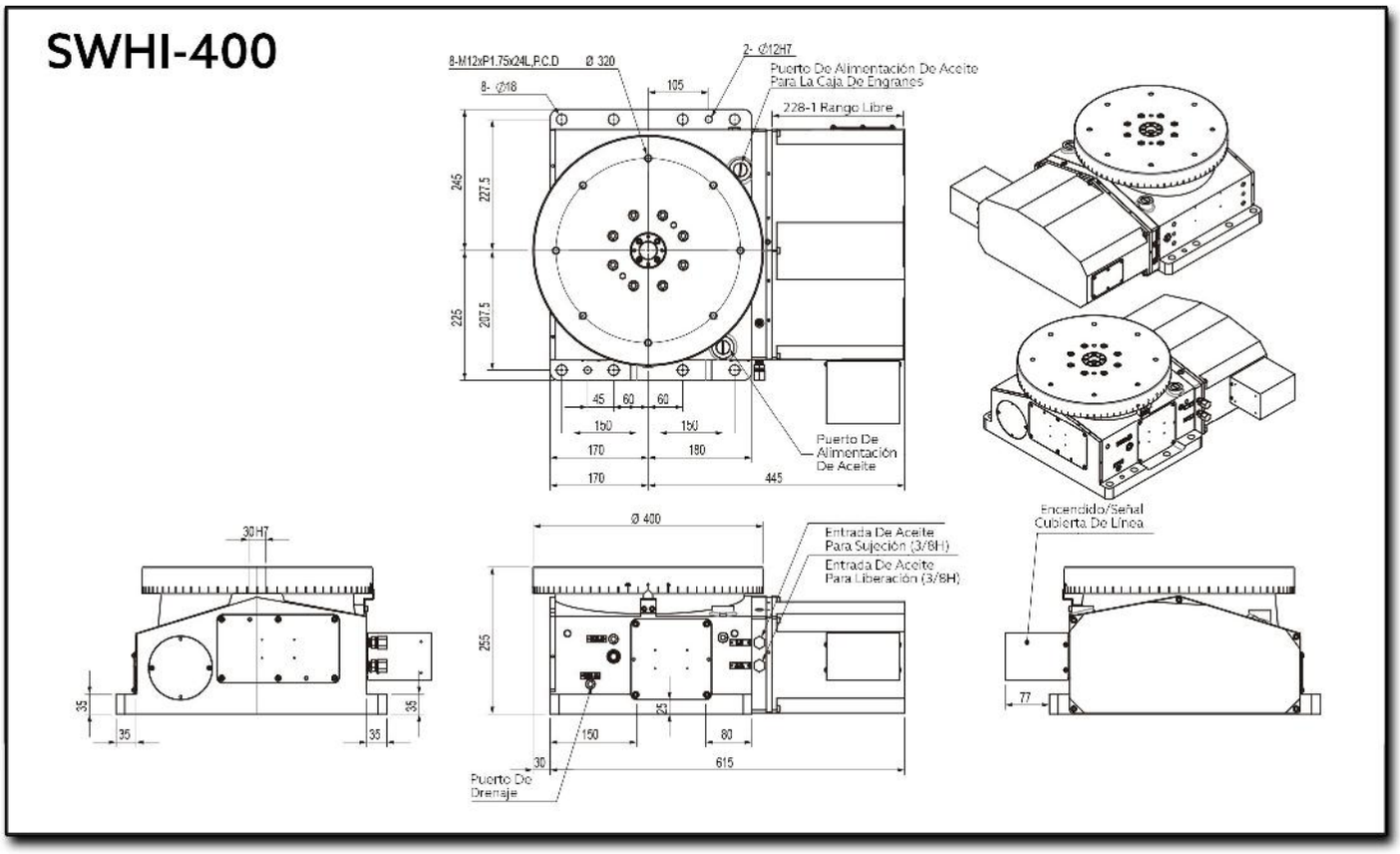
8-M12xP1.75x24L,P.C.D
Ø 320
8- Ø18
105
2- Ø12H7
Puerto De Alimentación De Aceite Para La Caja De Engranes
228-1 Rango Libre
245
227.5
225
207.5
45
60
60
150
150
170
180
170
445
Puerto De Alimentación De Aceite
30H7
35
35
35
35
Ø 400
Entrada De Aceite Para Sujeción (3/8H)
Entrada De Aceite Para Liberación (3/8H)
255
25
150
80
30
615
Puerto De Drenaje
Encendido/Señal Cubierta De Línea
77

Characteristics & Dimensions

MODEL	SWHI-400	
Table Diameter	*Ø 400.00*	
Height Of Table *(Horizontally)*	*255.00*	
Through-Hole Diameter	*Ø30 H7*	
Clamping Method *(Oil Pressure)(Kg7cm²)*	*35.00*	
Speed Reduction Ratio	*1 : 120*	
Maximum Speed Table *(4,000 r.p.m)*	*33.30*	
Allowable Workpiece Load *(Kg)*	*350.00*	
Minimum Increment *(deg.)*	*1° / 5° / 15°*	
Indexing Accuracy *(sec.)*	*± 5.00*	
Repeatability *(sec.)*	*± 1.00*	
Clamping Torque *(Nm)*	*2,500.00*	
Servo Motor Model *(Suggested)*	*FANUC*	*αi8 / β12is*
	MITSUBISHI	*HF-154S*
Worm Allowable Torque *(Nm)*	*750.00*	
Total Weight *(Without Servo Motor)(Kg)*	*205.00*	

***** All dimensions are given in millimeters.*

SWHI-500

CNC Hydraulic Gear Coupling Indexing Table

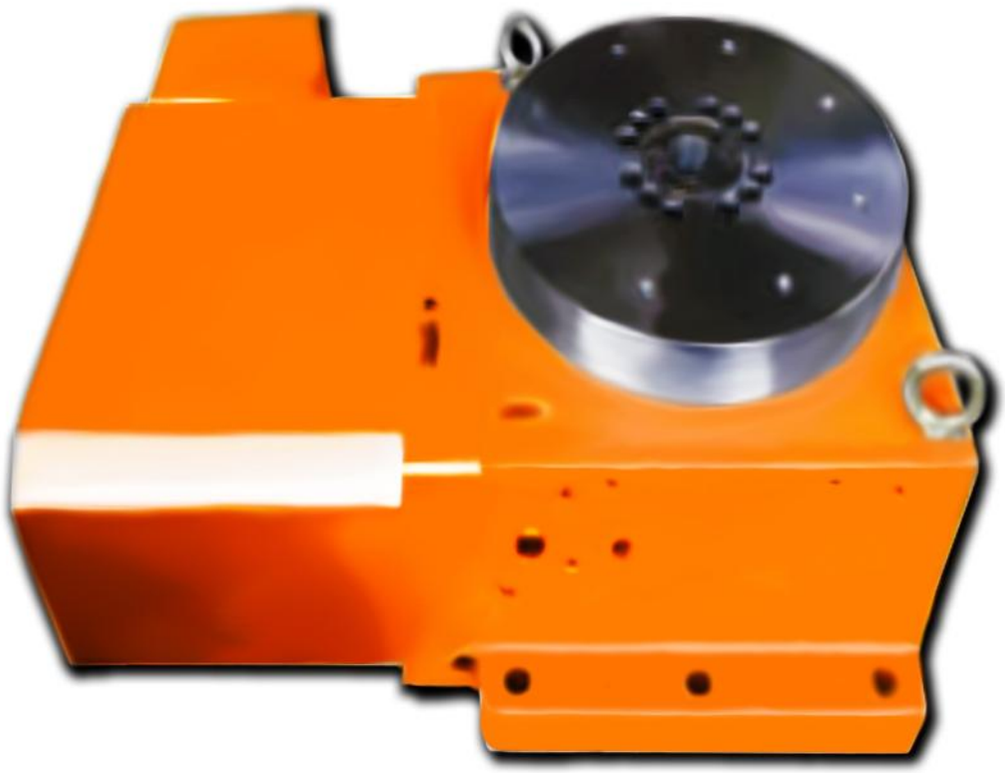

SWHI-500

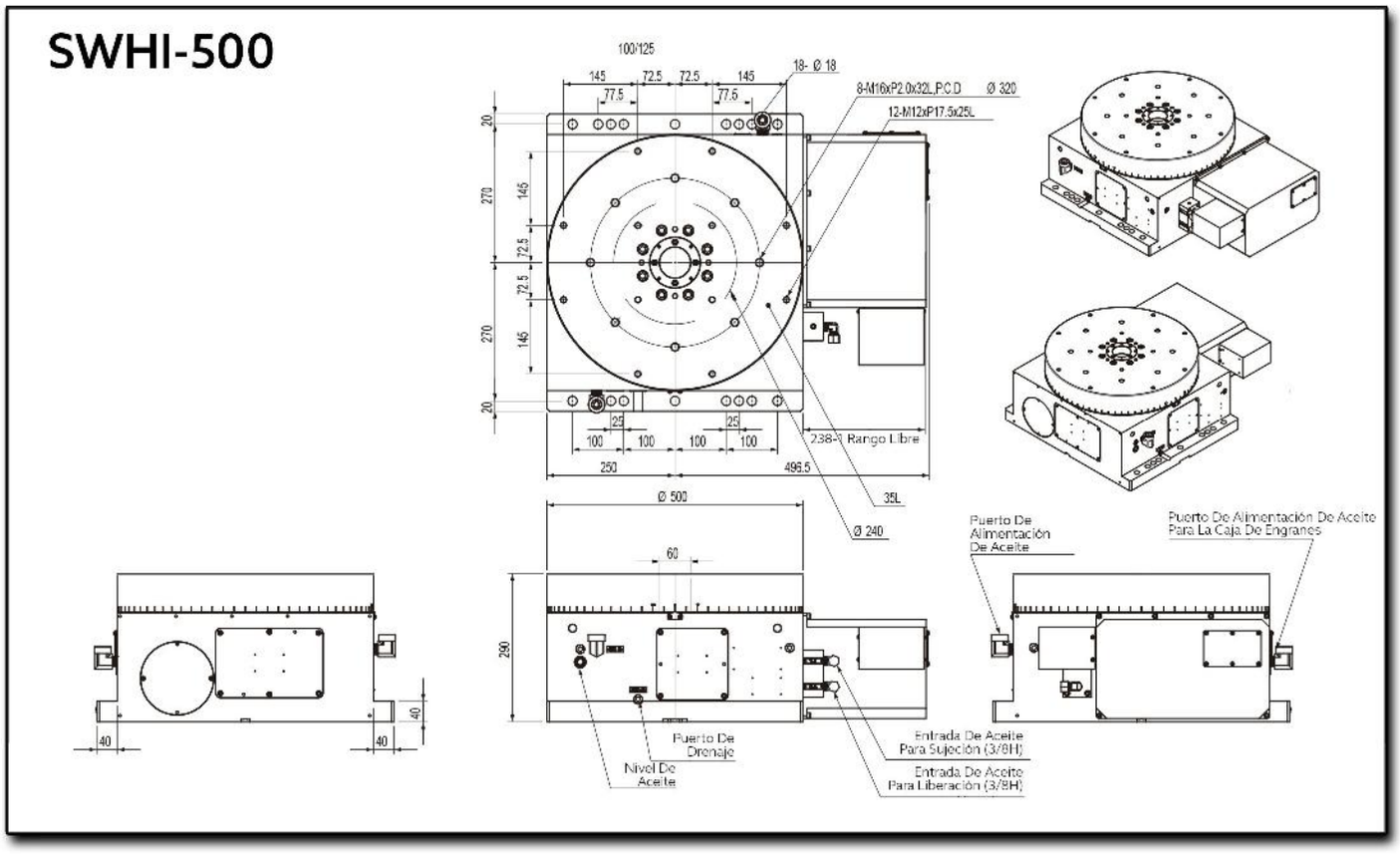
100/125
145
72.5
72.5
145
77.5
77.5
18- Ø 18
8-M16xP2.0x32L,P.C.D Ø 320
12-M12xP17.5x25L
20
270
145
72.5
72.5
145
270
20
25
25
100
100
100
100
238 Rango Libre
250
495.5
35L
Ø 240
Ø 500
60
290
40
40
40
Puerto De Alimentación De Aceite
Puerto De Alimentación De Aceite Para La Caja De Engranes
Puerto De Drenaje
Nivel De Aceite
Entrada De Aceite Para Sujeción (3/8H)
Entrada De Aceite Para Liberación (3/8H)

Characteristics & Dimensions

MODEL	SWHI-500	
Table Diameter	*Ø 500.00*	
Height Of Table *(Horizontally)*	*290.00*	
Through-Hole Diameter	*Ø60 H7*	
Clamping Method *(Oil Pressure)(Kg7cm²)*	*35.00*	
Speed Reduction Ratio	*1 : 120*	
Maximum Speed Table *(4,000 r.p.m)*	*25.00*	
Allowable Workpiece Load *(Kg)*	*1,200.00*	
Minimum Increment *(deg.)*	*1° / 5° / 15°*	
Indexing Accuracy *(sec.)*	*± 5.00*	
Repeatability *(sec.)*	*± 1.00*	
Clamping Torque *(Nm)*	*3,500.00*	
Servo Motor Model *(Suggested)*	*FANUC*	*α12i / β22is*
	MITSUBISHI	*HF-204S / HF-303S*
Worm Allowable Torque *(Nm)*	*1,700.00*	
Total Weight *(Without Servo Motor)(Kg)*	*410.00*	

***** All dimensions are given in millimeters.*

TY SERIES

HYDRAULIC/PNEUMATIC INDEXING TABLES

TY-180

Hydraulic / Pneumatic Indexing Tables



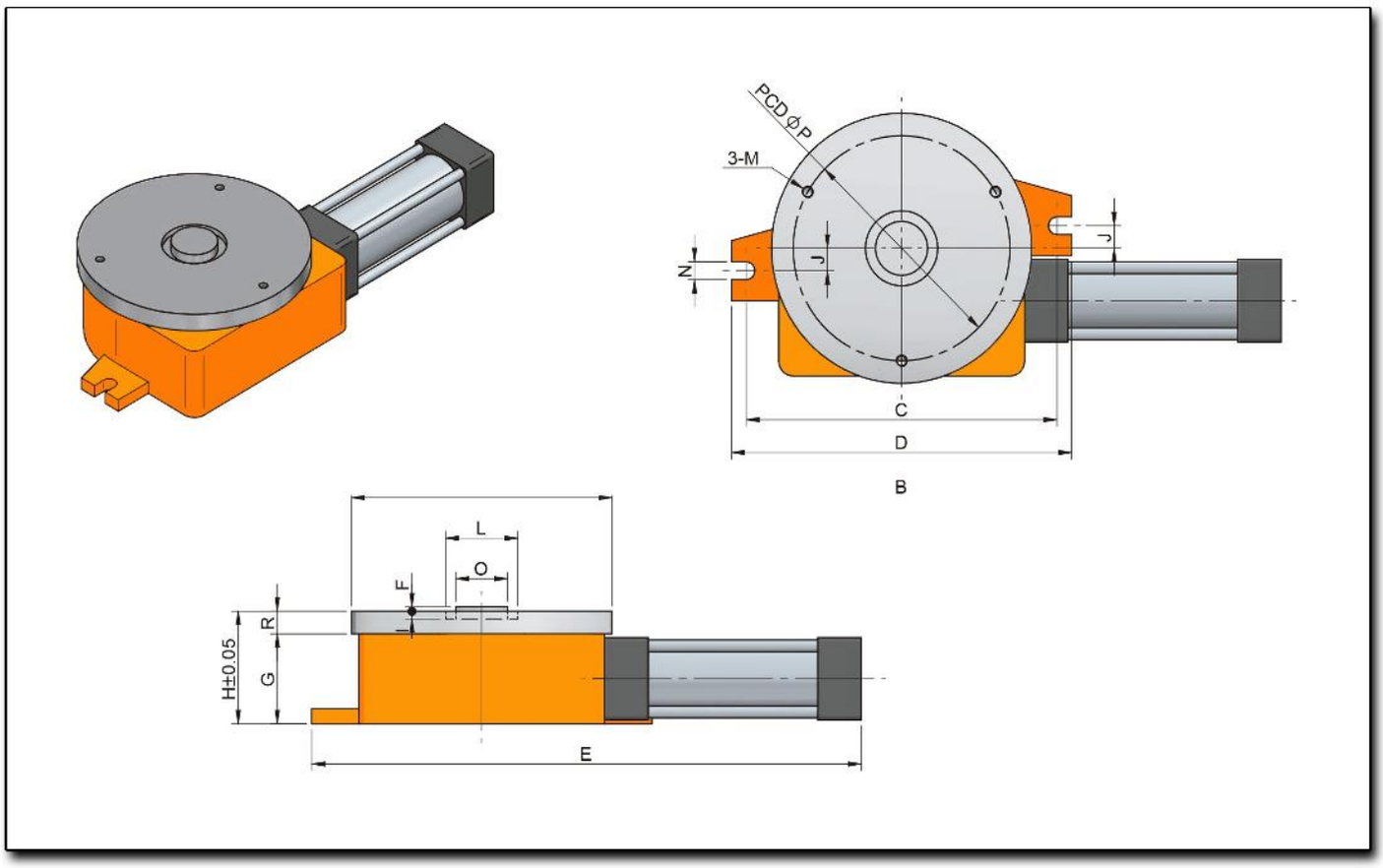
PCD ØP
3-M
N
J
J
C
D
B
L
O
F
R
H±0.05
G
E

Characteristics & Dimensions

MODEL	TY-180
Indexing Table Power	***6.00Kg/cm²*** *(Pneumatic)* ***15.00Kg/cm²*** *(Hydraulic)*
Table Diameter	***180.00***
Maximum Turning Table Load (Kg)	***50.00***
Rotating Direction	***Clock-Wise*** *or* ***Counter Clock-Wise***
Indexing Station Number	***4, 6, 8, 12, 24***
Accuracy	***±0.02 m/m***
Position Drive	***Ratchet Drive***
Total Device Weight	***11.00***
A	***Ø40 x 75∂***
B	***180.00***
C	***215.00***
D	***235.00***
E	***380.00***
F	***6.00***
G	***60.00***
H	***75.00***
I	***3.00***
J	***15.00***
L	***50.00***
M	***80 x P1.25***
N	***12.00***
O	***36.00***
P	***150.00***
R	***15.00***

*** Roundness: Within 0.003 millimeters.*
***** All dimensions are given in millimeters.*

TY-250

Hydraulic / Pneumatic Indexing Tables



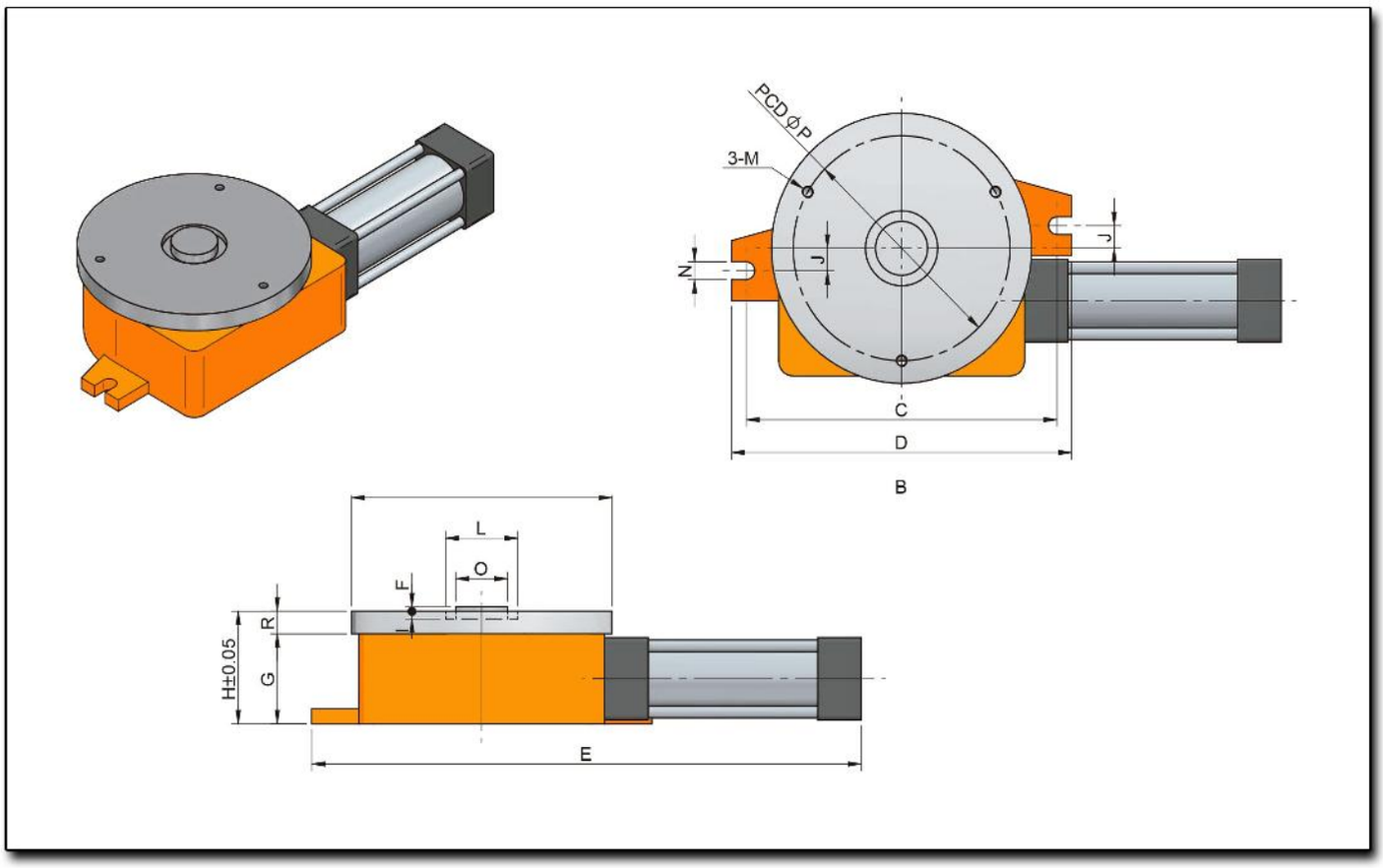
PCD ØP
3-M
N
J
J
C
D
B
L
O
F
R
H±0.05
G
E

Características & Dimensiones

Modelo	TY-250
Potencia De La Mesa	*6.00 Kgf/cm² / 15.00 Kgf/cm²*
Diámetro Del Disco De Carga	*Ø250°*
Carga Máxima	*100.00 Kg*
Dirección De Giro	*A Favor De Las Manecillas Del Reloj / En Contra De Las Manecillas Del Reloj*
Numero De Estaciones De Indexado	*4, 6, 8, 12 & 24*
Precisión	*± 0.02 m/m*
Sistema De Posicionamiento	*Por Trinquete*
Peso Del Dispositivo	*28.00 Kg.*
A	*Ø63 x 100∂*
B	*250.00*
C	*280.00*
D	*300.00*
E	*470.00*
F	*8.00*
G	*80.00*
H	*104.00*
I	*3.00*
J	*20.00*
L	*80.00*
M	*M10 x P1.50*
N	*15.00*
O	*50.00*
P	*200.00*
R	*24.00*

***** Todas las dimensiones están dadas en milímetros.*

TY-320

Hydraulic / Pneumatic Indexing Tables



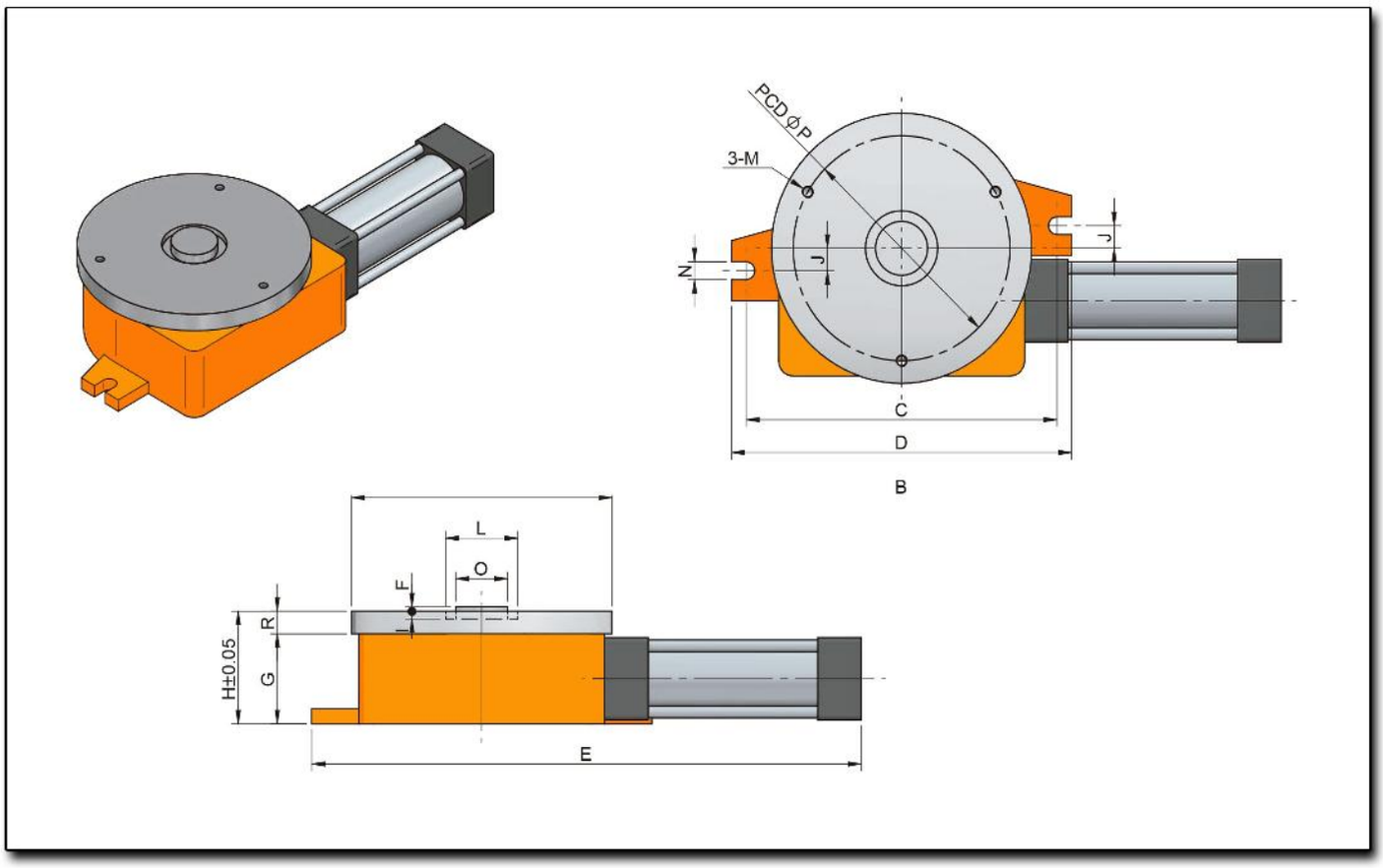
PCD ØP
3-M
N
J
J
C
D
B
L
O
F
R
H±0.05
G
E

Characteristics & Dimensions

MODEL	TY-320
Indexing Table Power	***6.00Kg/cm²*** *(Pneumatic)* ***15.00Kg/cm²*** *(Hydraulic)*
Table Diameter	***320.00***
Maximum Turning Table Load (Kg)	***200.00***
Rotating Direction	***Clock-Wise*** *or* ***Counter Clock-Wise***
Indexing Station Number	***4, 6, 8, 12, 24***
Accuracy	***±0.02 m/m***
Position Drive	***Ratchet Drive***
Total Device Weight	***58.00***
A	***Ø80 x 140∂***
B	***320.00***
C	***360.00***
D	***385.00***
E	***595.00***
F	***9.00***
G	***100.00***
H	***127.00***
I	***3.00***
J	***20.00***
L	***100.00***
M	***(4-M)/(M10 x P1.50)***
N	***20.00***
O	***58.00***
P	***260.00***
R	***27.00***

*** Roundness: Within 0.003 millimeters.*
**** All dimensions are given in millimeters.*

VAH SERIES

HIGH PERFORMANCE VERTICAL SLIDE

VAH220-300/420

Hi Performance Hydraulic Vertical Slide

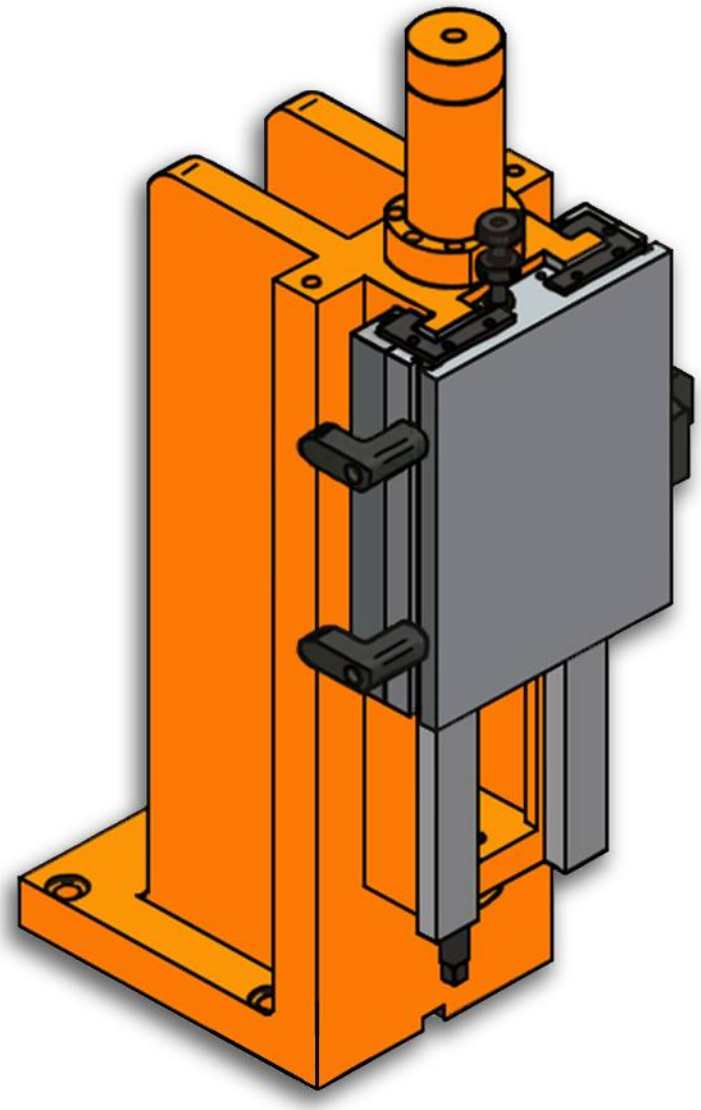

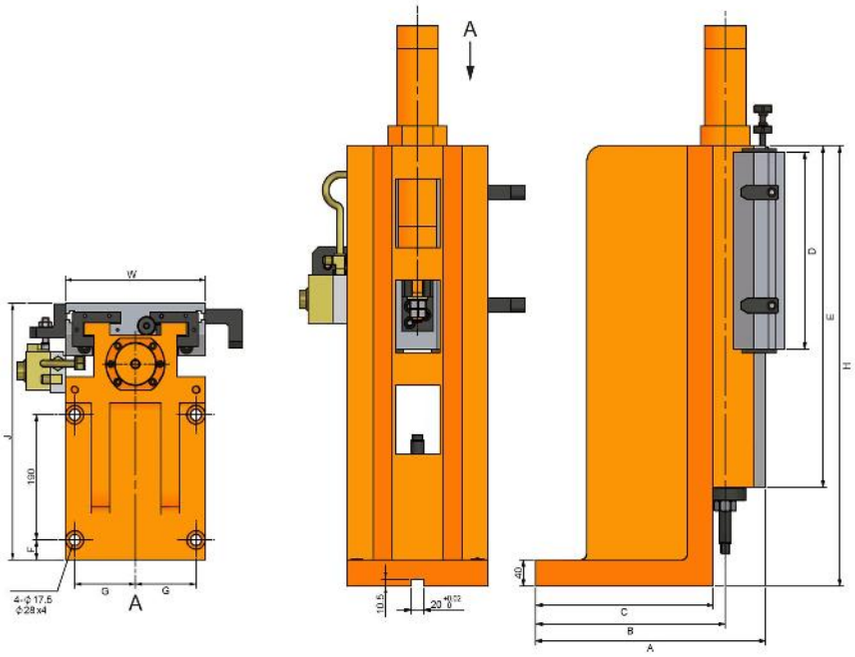
A
W
J
190
F
G
G
A
4-ϕ 17.5
ϕ 28 x4
10.5
20
40
D
E
H
C
B
A

Characteristics & Dimensions

MODEL	VAH220-300/420
A	*360.00*
B	*297.00*
C	*278.00*
D	*300.00*
E	*420.00*
F	*30.00*
G	*95.00*
J	*390.00*
W	*220.00*
H	*420.00*
Piston Diameter	*Ø50*
Maximum Slide Stroke	*100.00*
Total Device Weight	*115.00*

***** All dimensions are given in millimeters.*

VAH220-300/670

Hi Performance Hydraulic Vertical Slide

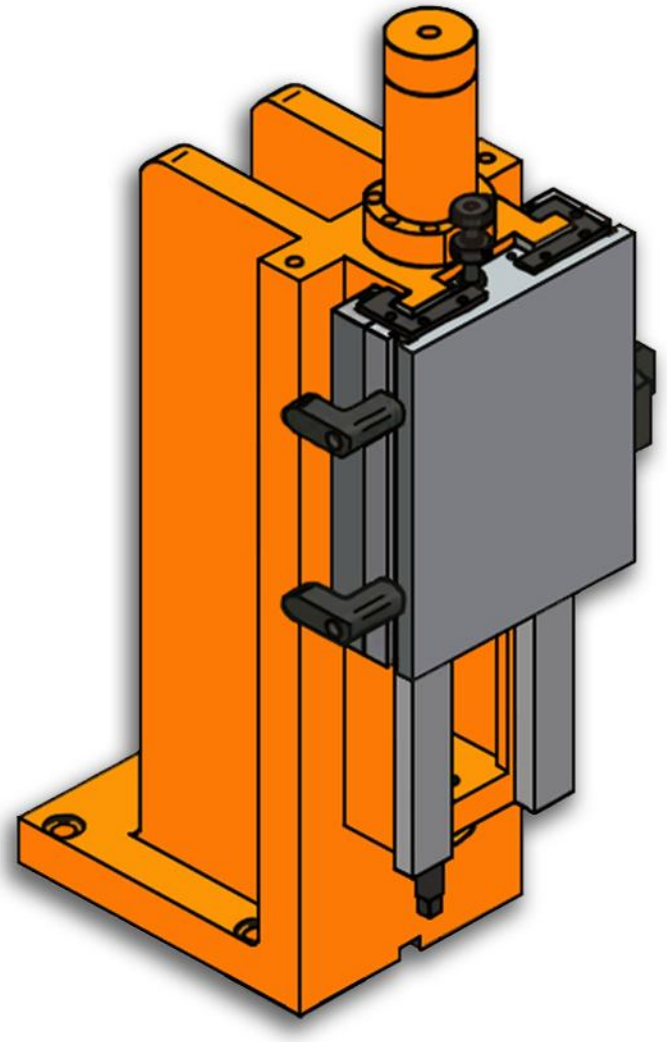

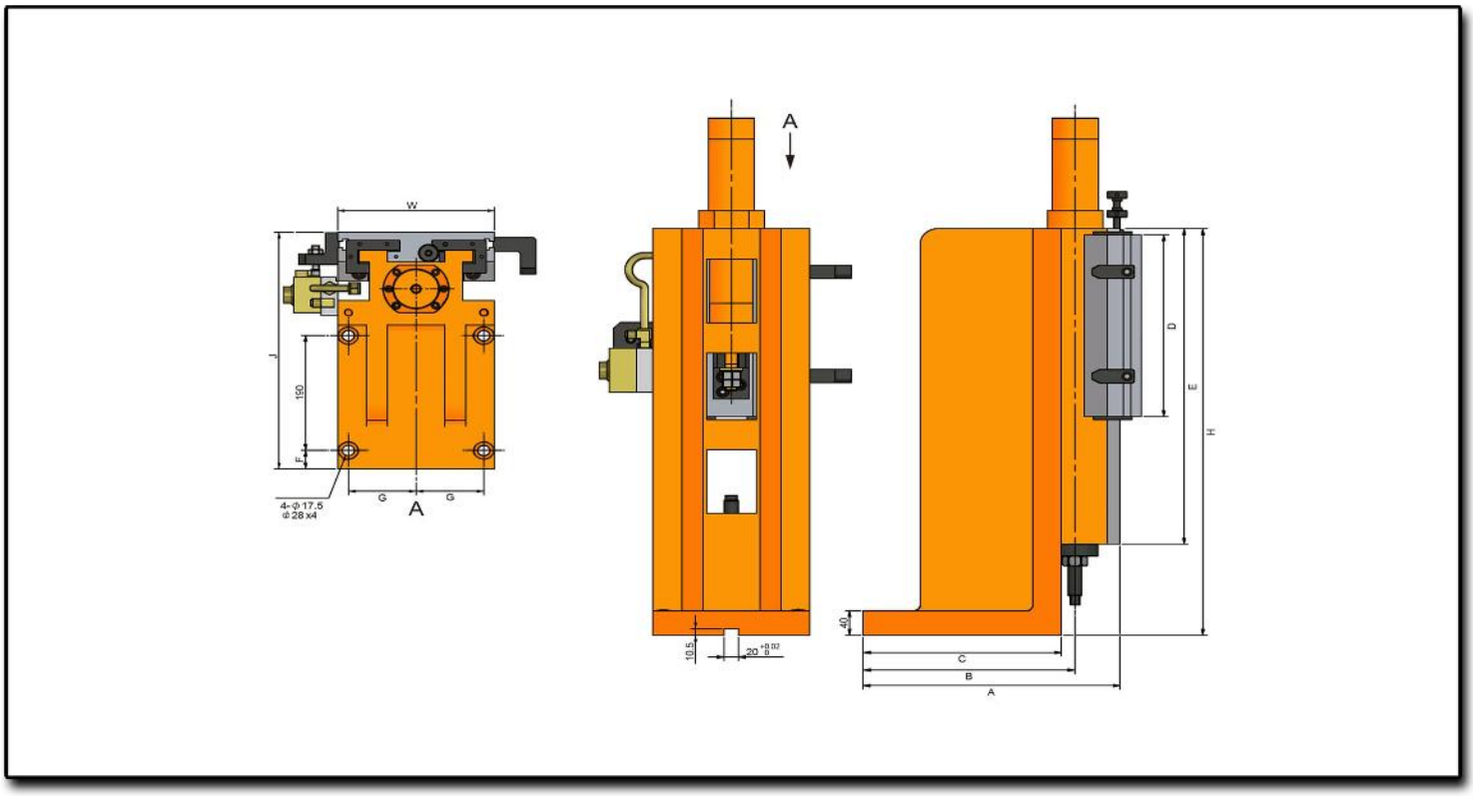
W
J
150
F
G
G
A
4-Φ17.5
Φ28x4
A
10.5
20 +0.02 0
40
C
B
A
D
E
H

Characteristics & Dimensions

MODEL	VAH220-300/670
A	*360.00*
B	*297.00*
C	*278.00*
D	*300.00*
E	*520.00*
F	*30.00*
G	*95.00*
J	*390.00*
W	*220.00*
H	*670.00*
Piston Diameter	*Ø50*
Maximum Slide Stroke	*200.00*
Total Device Weight	*147.00*

***** All dimensions are given in millimeters.*

VAH300-360/540

Hi Performance Hydraulic Vertical Slide

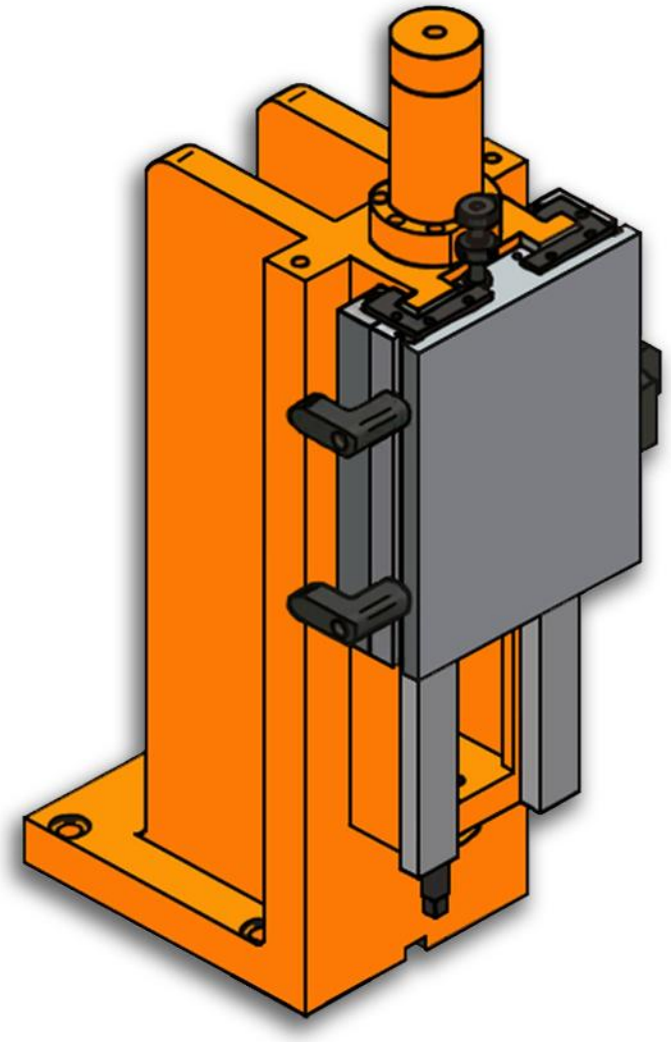

Characteristics & Dimensions

MODEL	VAH300-360/540
A	*400.00*
B	*315.00*
C	*273.00*
D	*360.00*
E	*500.00*
F	*25.00*
G	*130.00*
J	*450.00*
W	*300.00*
H	*540.00*
Piston Diameter	*Ø60*
Maximum Slide Stroke	*120.00*
Total Device Weight	*194.00*

***** All dimensions are given in millimeters.*

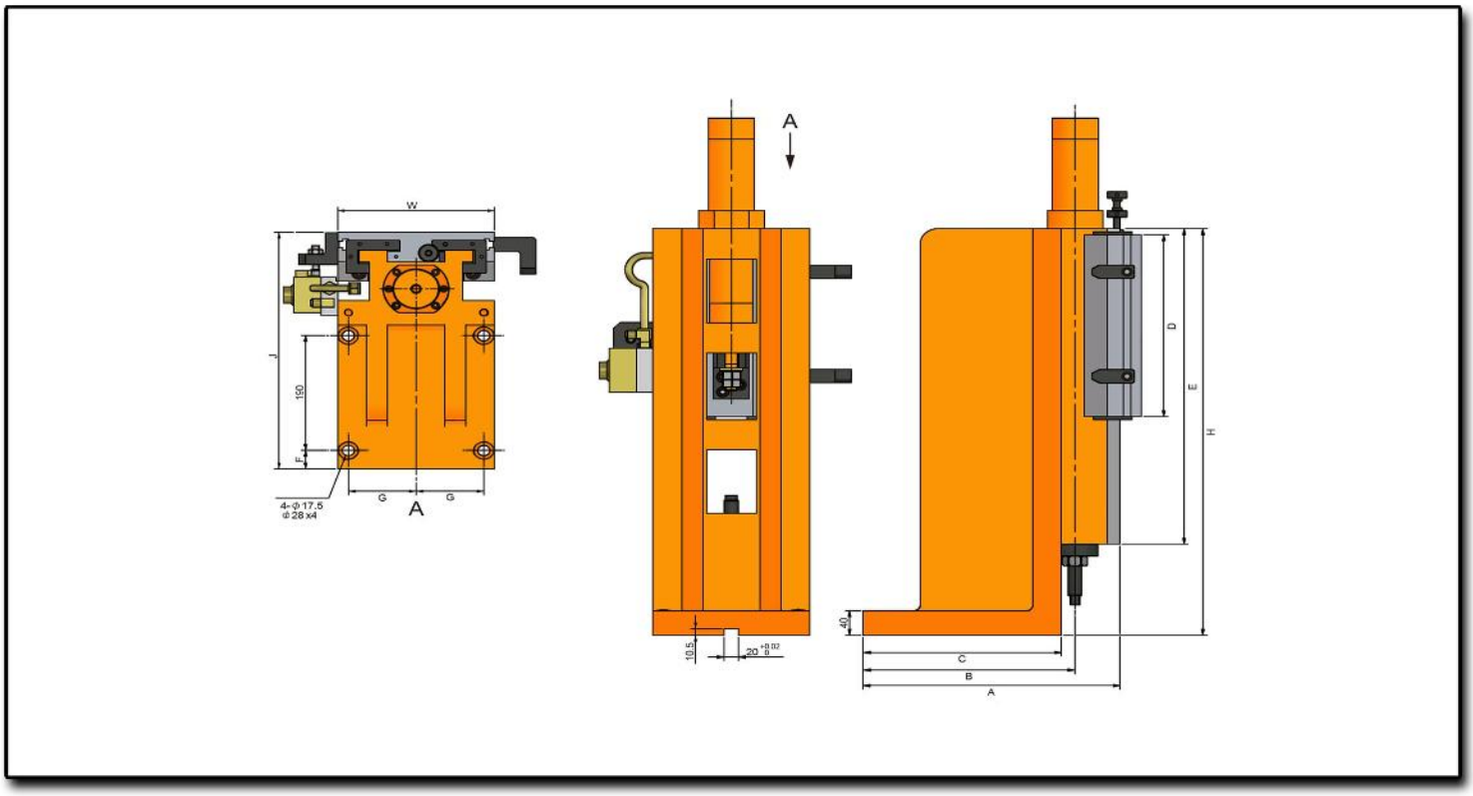
W
J
150
F
G
G
A
4-Φ17.5
Φ28x4
A
10.5
20 +0.02 0
40
C
B
A
D
E
H

VAH300-360/720

Hi Performance Hydraulic Vertical Slide

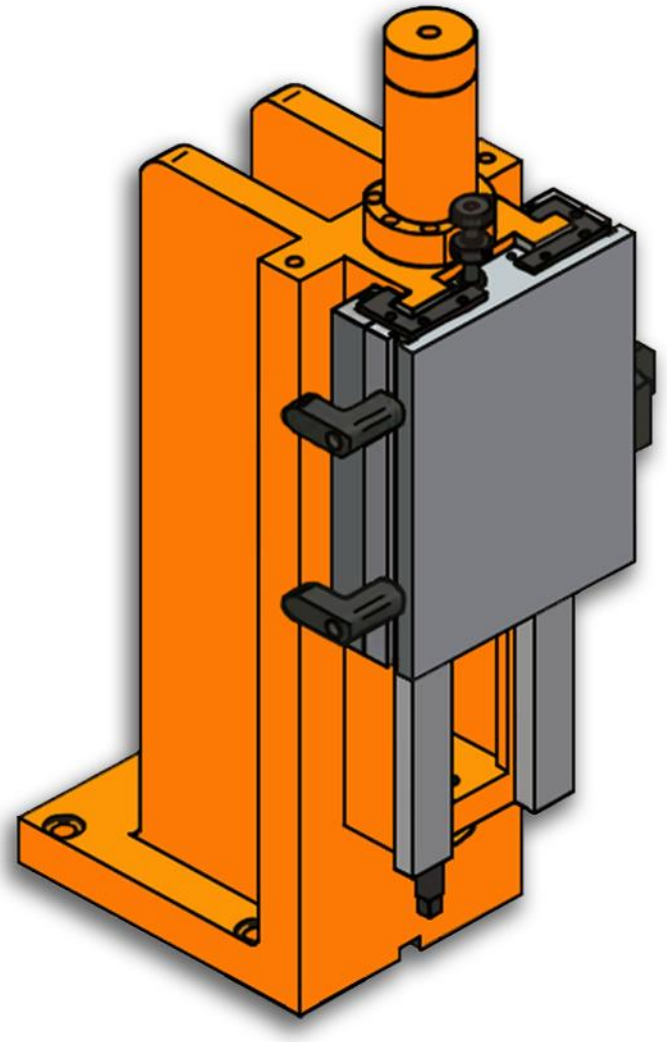

Characteristics & Dimensions

MODEL	VAH300-360/720
A	*400.00*
B	*315.00*
C	*273.00*
D	*360.00*
E	*600.00*
F	*25.00*
G	*130.00*
J	*450.00*
W	*300.00*
H	*720.00*
Piston Diameter	*Ø60*
Maximum Slide Stroke	*220.00*
Total Device Weight	*240.00*

***** All dimensions are given in millimeters.*

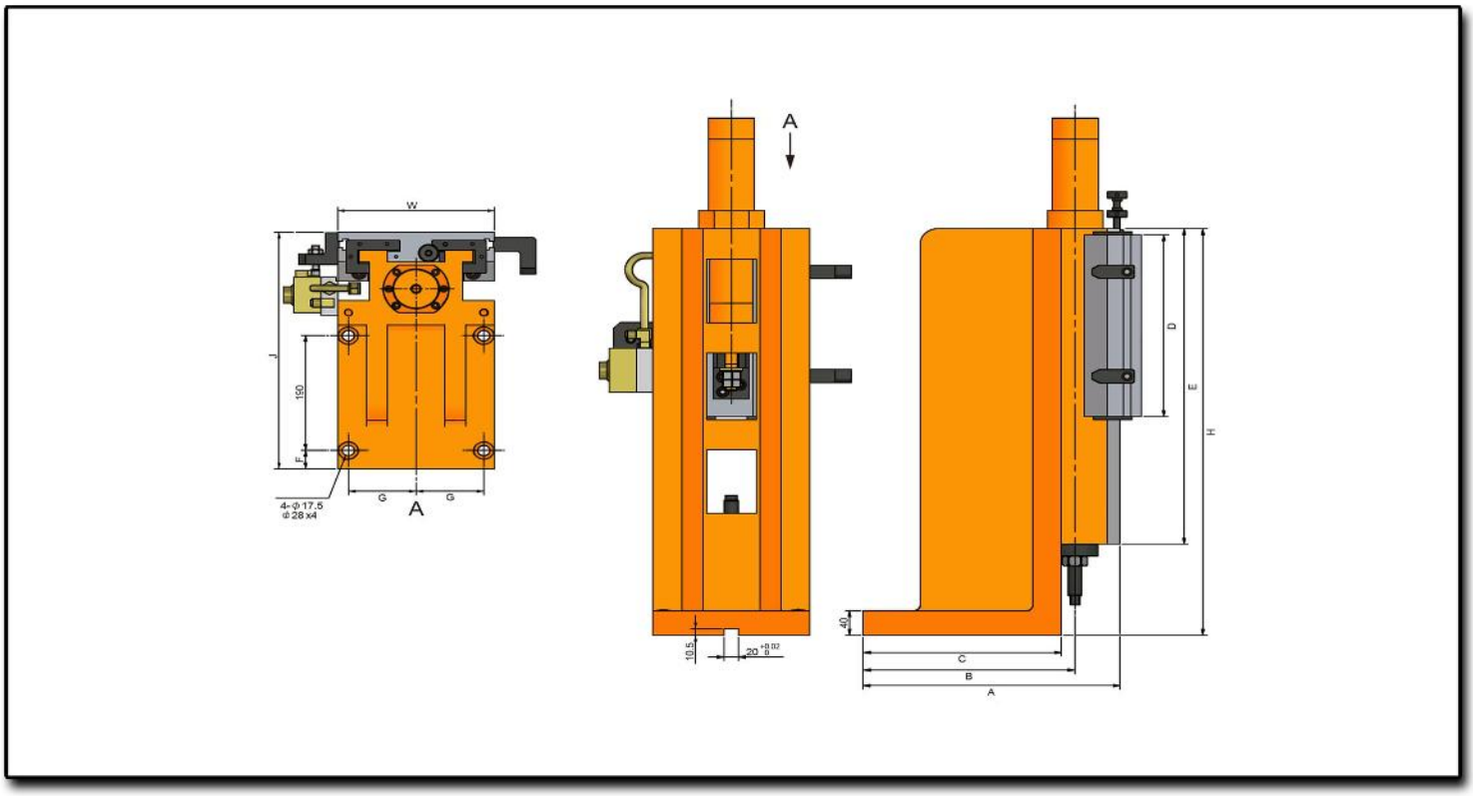
W
J
150
F
G
G
A
4-Φ17.5
Φ28x4
A
10.5
20 +0.02 0
40
C
B
A
D
E
H

VAH360-360/920

Hi Performance Hydraulic Vertical Slide

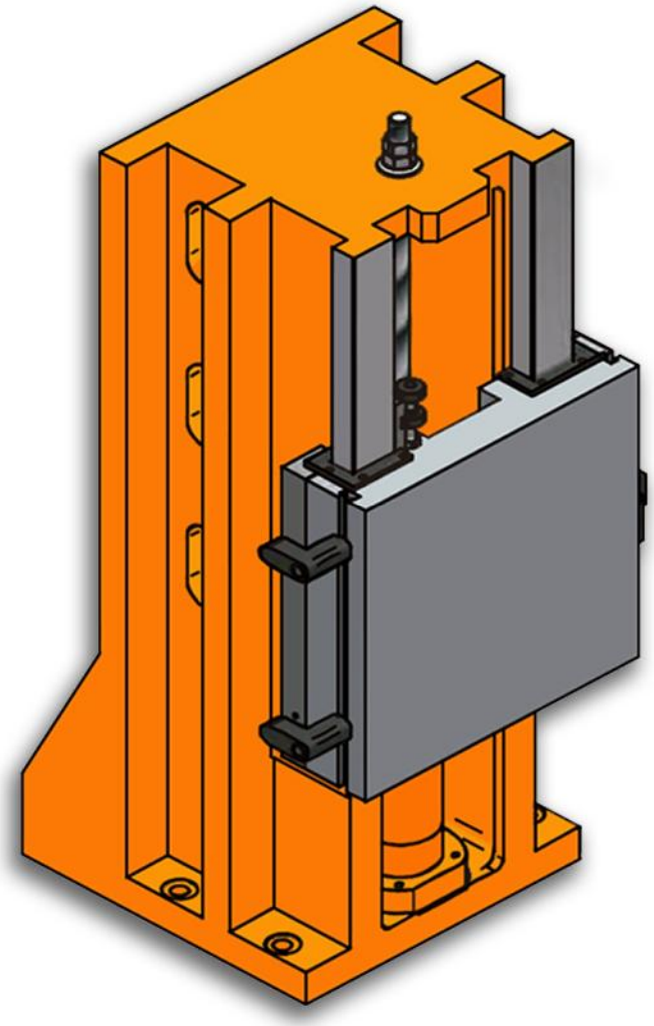

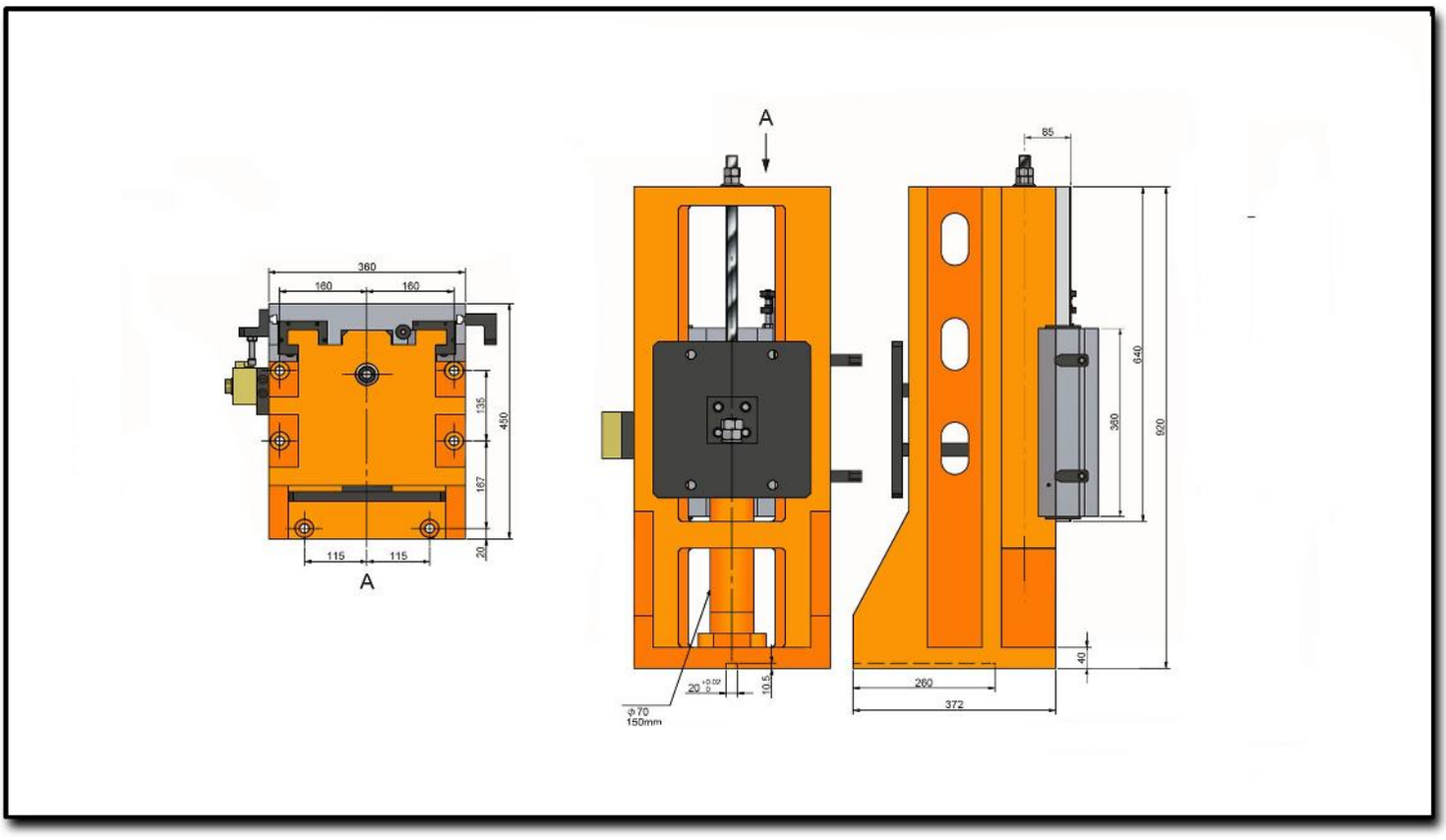
A
360
180
160
135
450
167
115
115
20
A
85
640
360
920
40
260
372
20 +0.02 0
10.5
ϕ 70
150mm

Characteristics & Dimensions

MODEL	VAH360-360/920
A	*372.00*
B	*322.00*
C	-
D	*360.00*
E	*640.00*
F	*20.00*
G	*115.00*
J	*450.00*
W	*360.00*
H	*920.00*
Piston Diameter	*Ø70*
Maximum Slide Stroke	*260.00*
Total Device Weight	*289.00*

**** All dimensions are given in millimeters.

VAP SERIES

PLATFORM VERTICAL SLIDE

VAP-100

Platform Vertical Slide

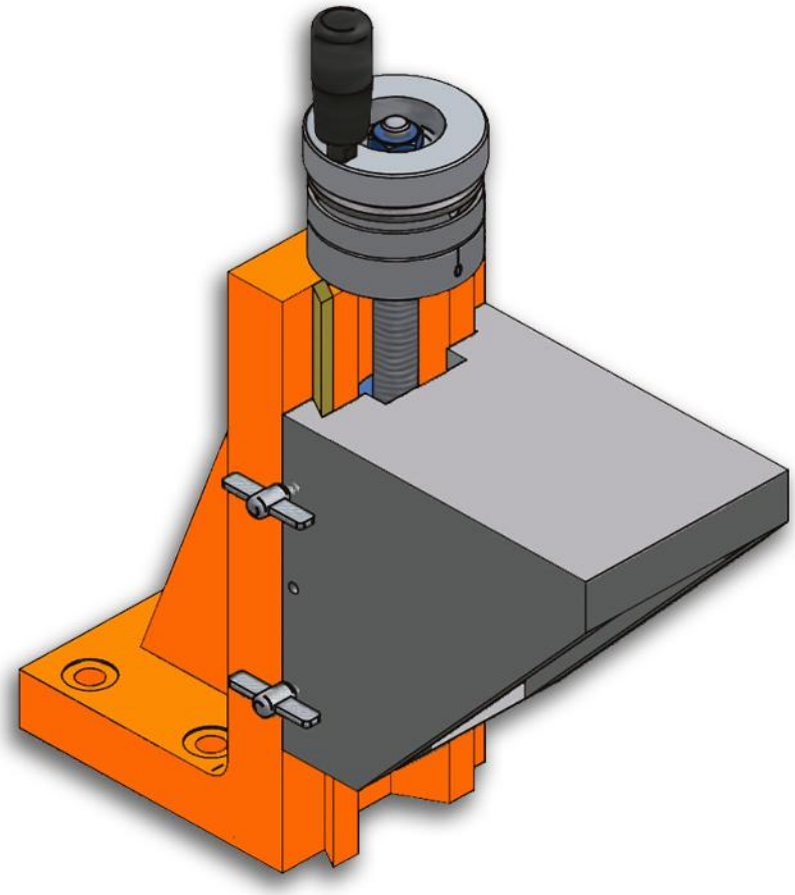

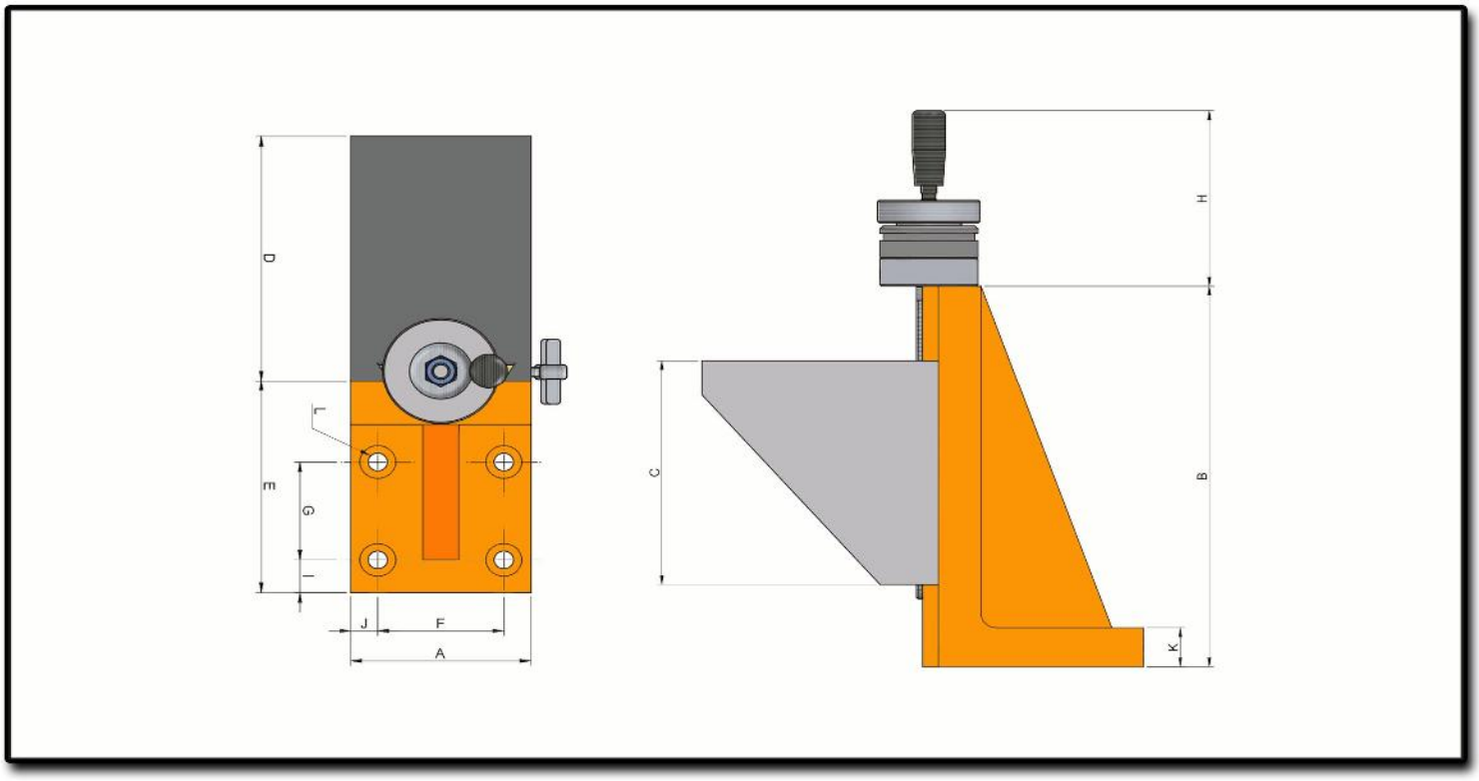
D
E
G
I
L
J
F
A
H
C
B
K

Characteristics & Dimensions

MODEL	VAP-100
A	*100.00*
B	*255.00*
C	*150.00*
D	*150.00*
E	*130.00*
F	*70.00*
G	*60.00*
H	*117.00*
I	*20.00*
J	*15.00*
K	*26.00*
L	*Ø4-11 | 20 x 1*
Total Device Weight	*15.00*

***** All dimensions are given in millimeters.*

VAP-150

Plaform Vertical Slide

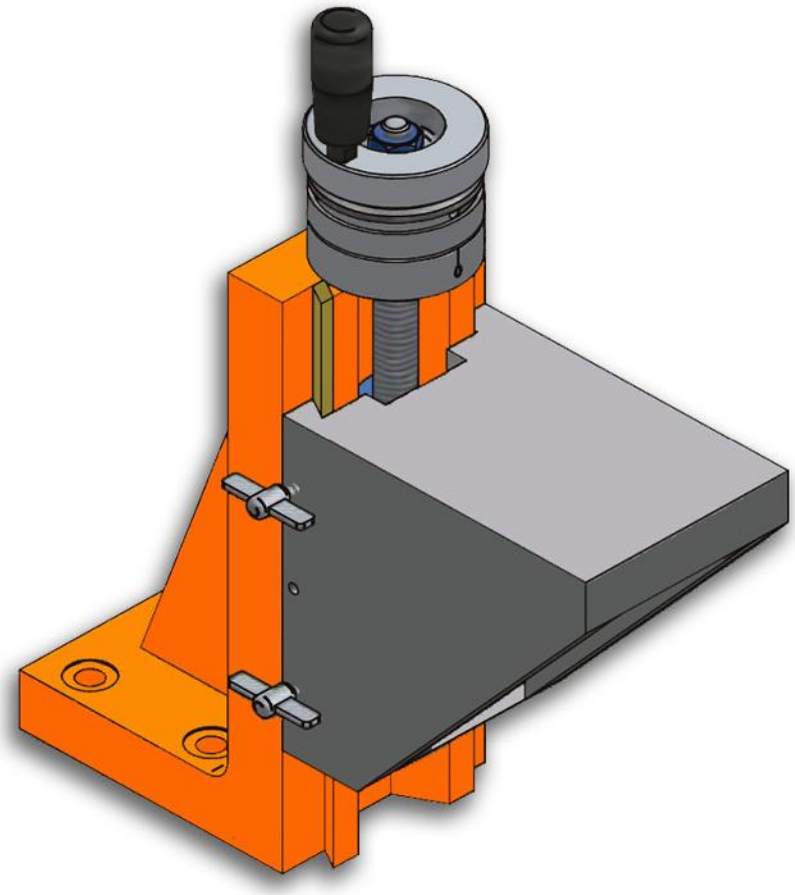

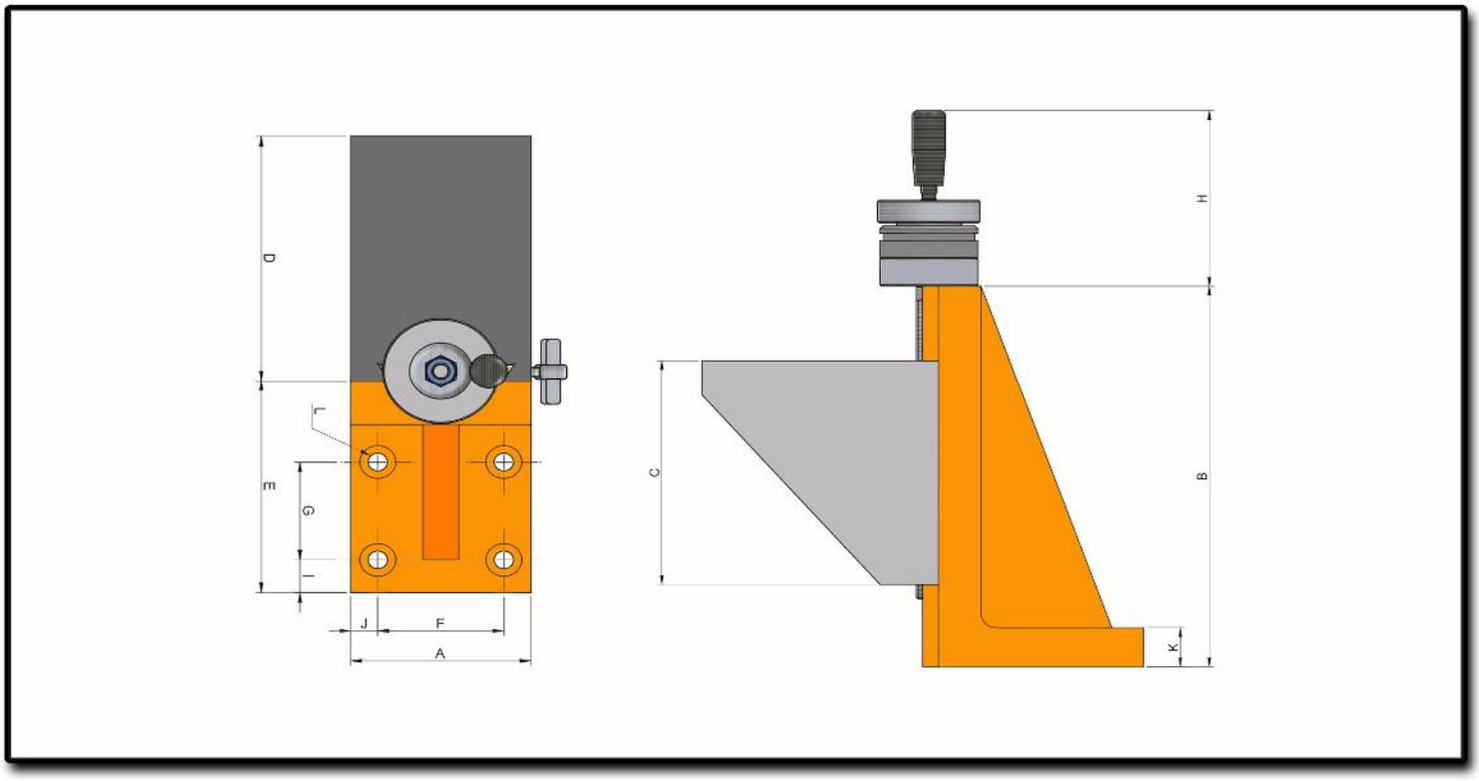
D
E
G
I
L
J
F
A
H
C
B
K

Characteristics & Dimensions

MODEL	VAP-150
A	*150.00*
B	*385.00*
C	*200.00*
D	*200.00*
E	*181.00*
F	*110.00*
G	*90.00*
H	*130.00*
I	*20.00*
J	*20.00*
K	*35.00*
L	*Ø4-13 | 23 x 1*
Total Device Weight	*40.00*

***** All dimensions are given in millimeters.*

VAP-200

Plaform Vertical Slide

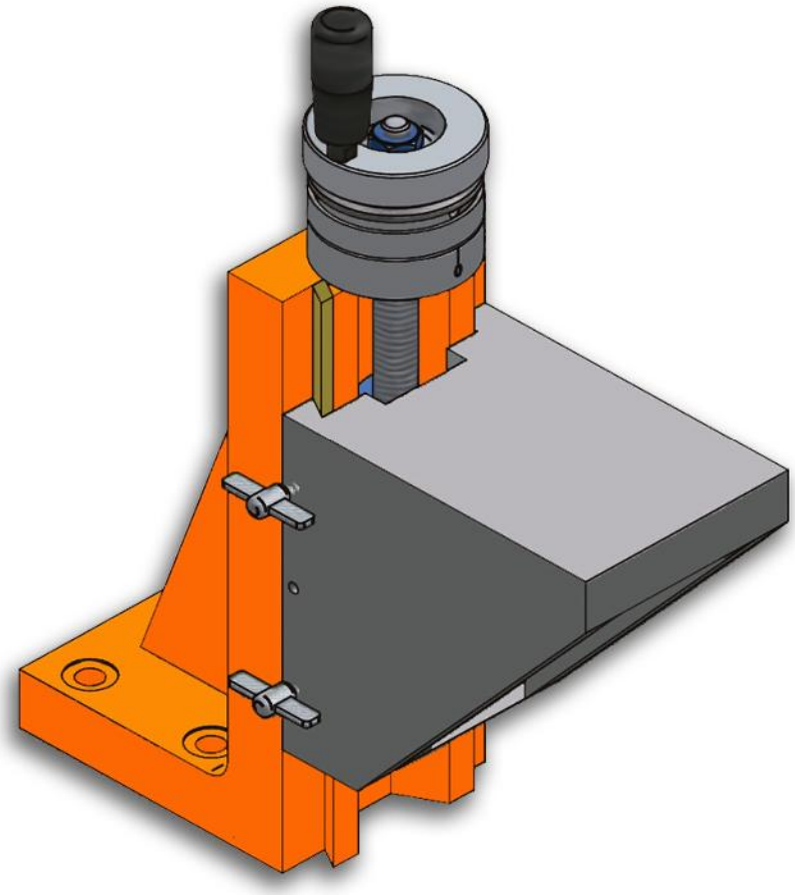

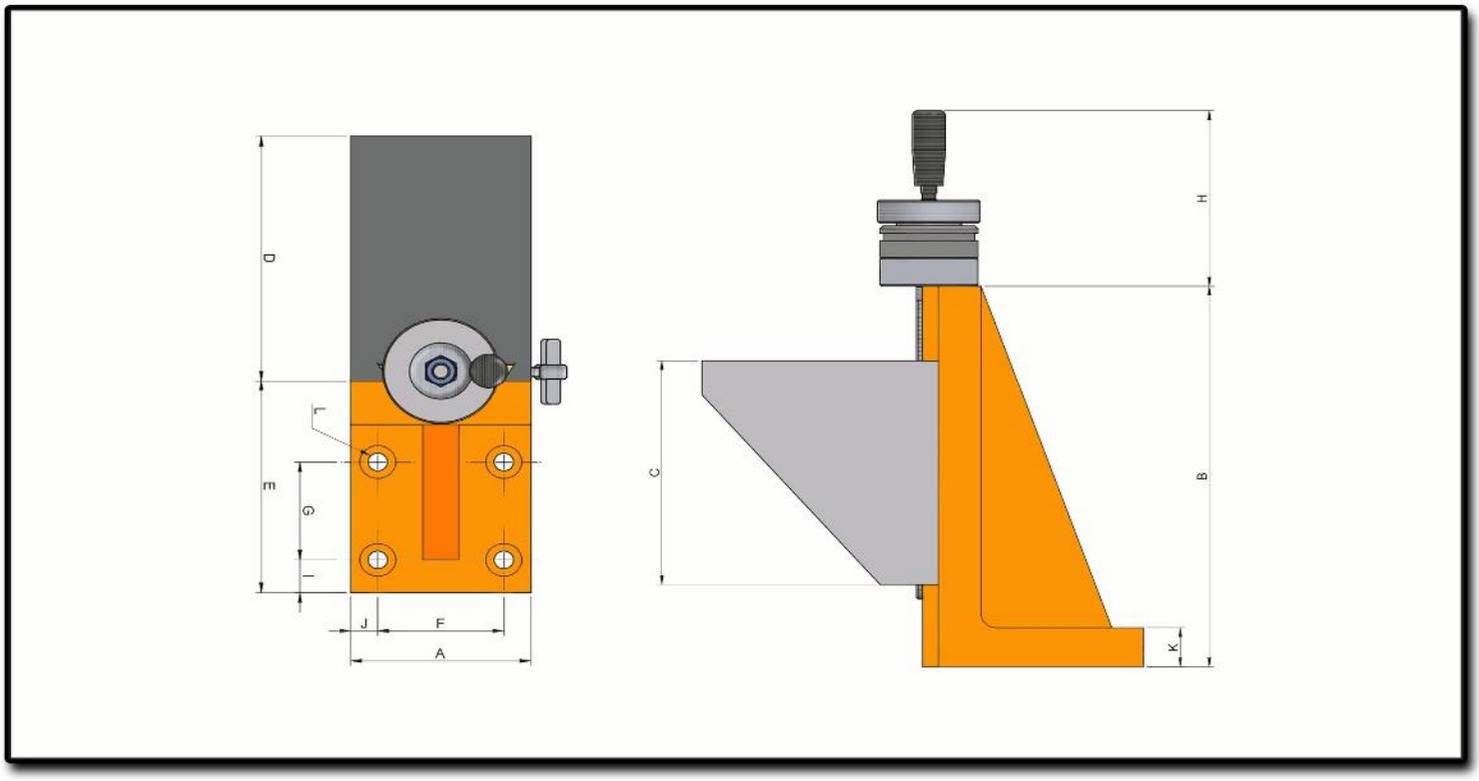
D
E
G
I
L
J
F
A
H
C
B
K

Characteristics & Dimensions

MODEL	VAP-200
A	*200.00*
B	*510.00*
C	*250.00*
D	*250.00*
E	*235.00*
F	*160.00*
G	*140.00*
H	*142.00*
I	*20.00*
J	*20.00*
K	*45.00*
L	*Ø4-17.50 | 26 x 1*
Total Device Weight	*82.00*

***** All dimensions are given in millimeters.*

VAS I SERIES

REINFORCED VERTICAL SLIDES WITH LEAD SCREW

VAS-100

Angular Vertical Slide

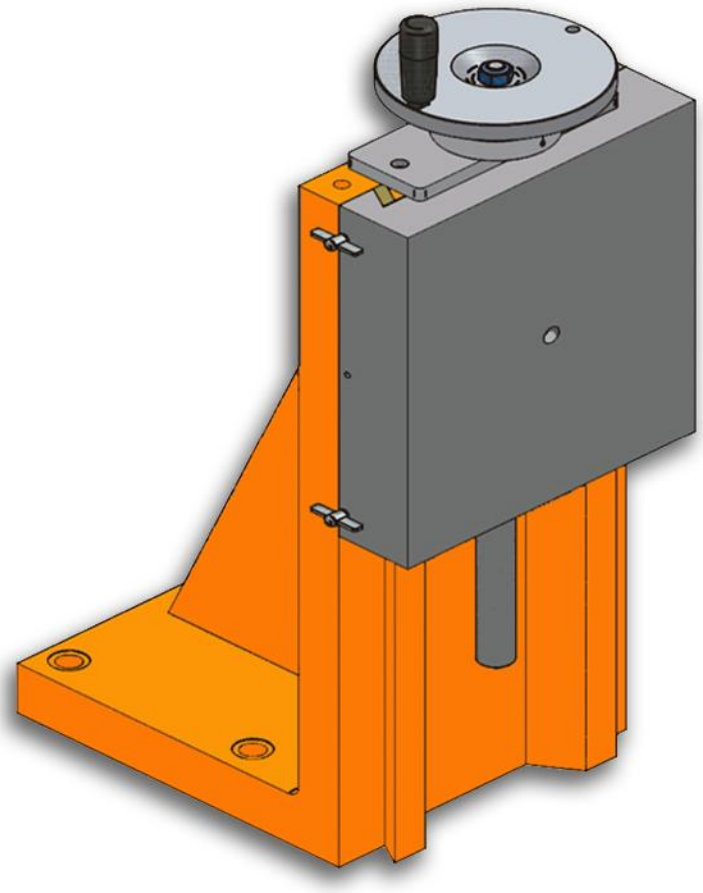

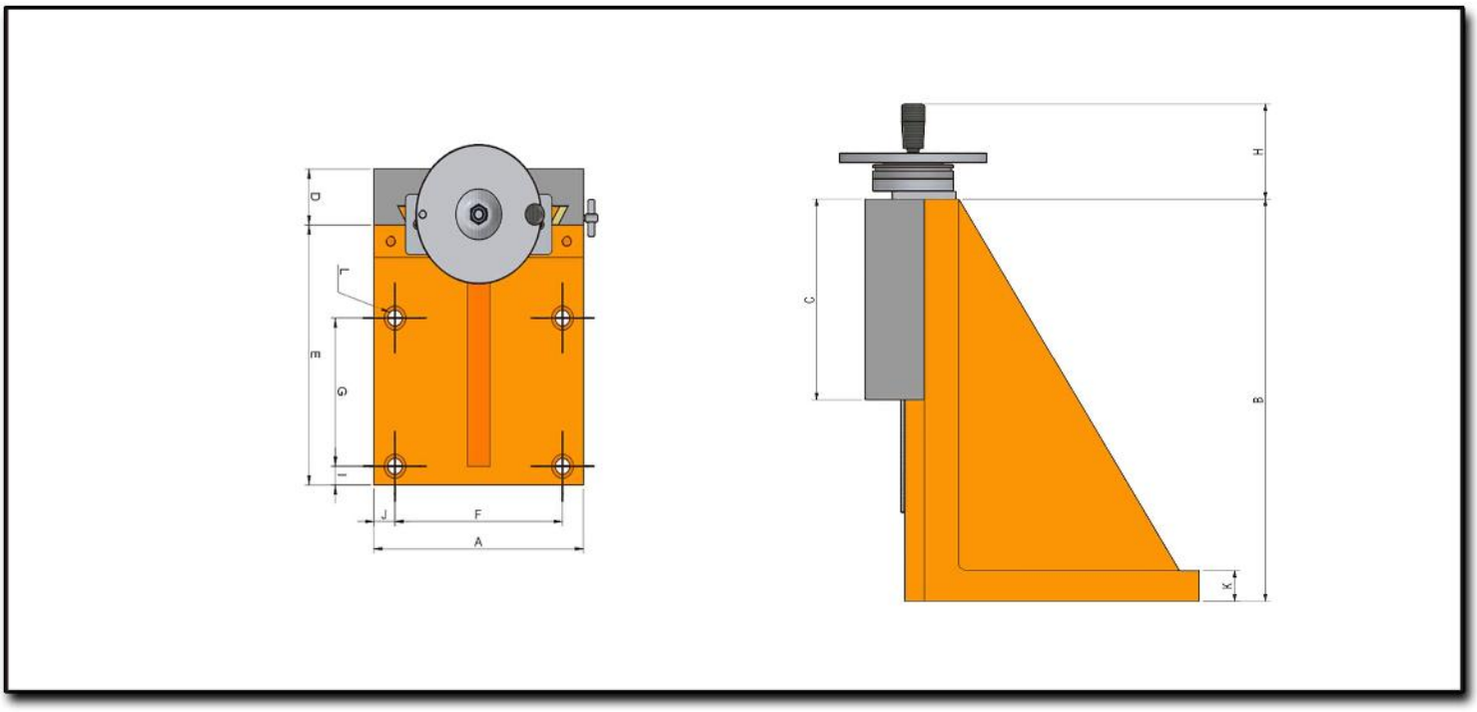
D
L
E
G
I
J
F
A
H
C
B
K

Characteristics & Dimensions

MODEL	VAS-100
A	*100.00*
B	*255.00*
C	*150.00*
D	*35.00*
E	*130.00*
F	*70.00*
G	*60.00*
H	*117.00*
I	*20.00*
J	*15.00*
K	*26.00*
L	*Ø4.00 ~ 11.00 | 20.00 x 1*
Total Device Weight ***(Kg)***	*12.00*

*** Roundness ≤ 0.003 mm.*
**** All dimensions are given in millimeters.*

VAS-150

Angular Vertical Slide

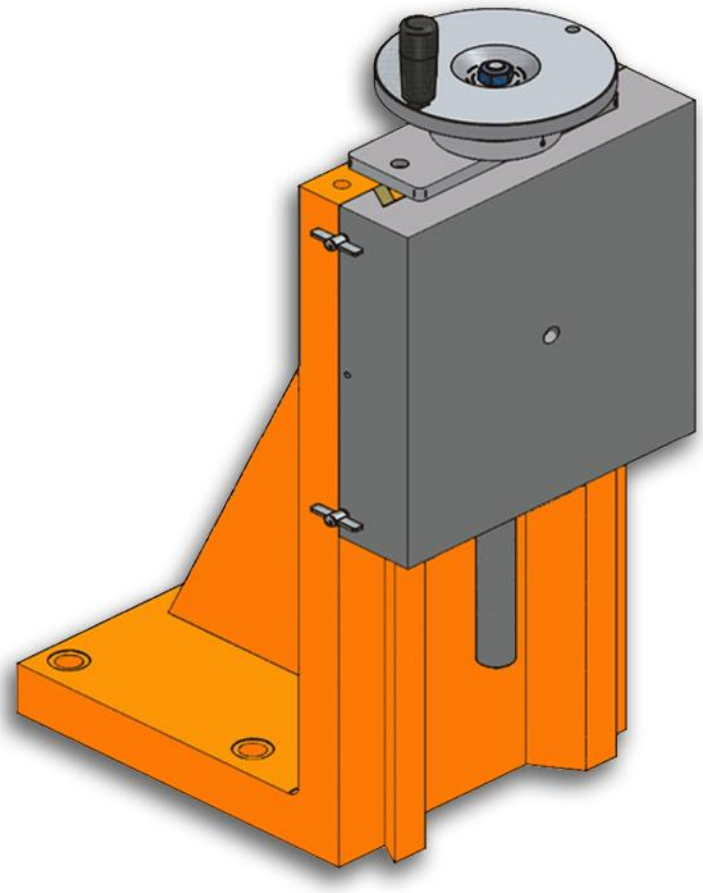

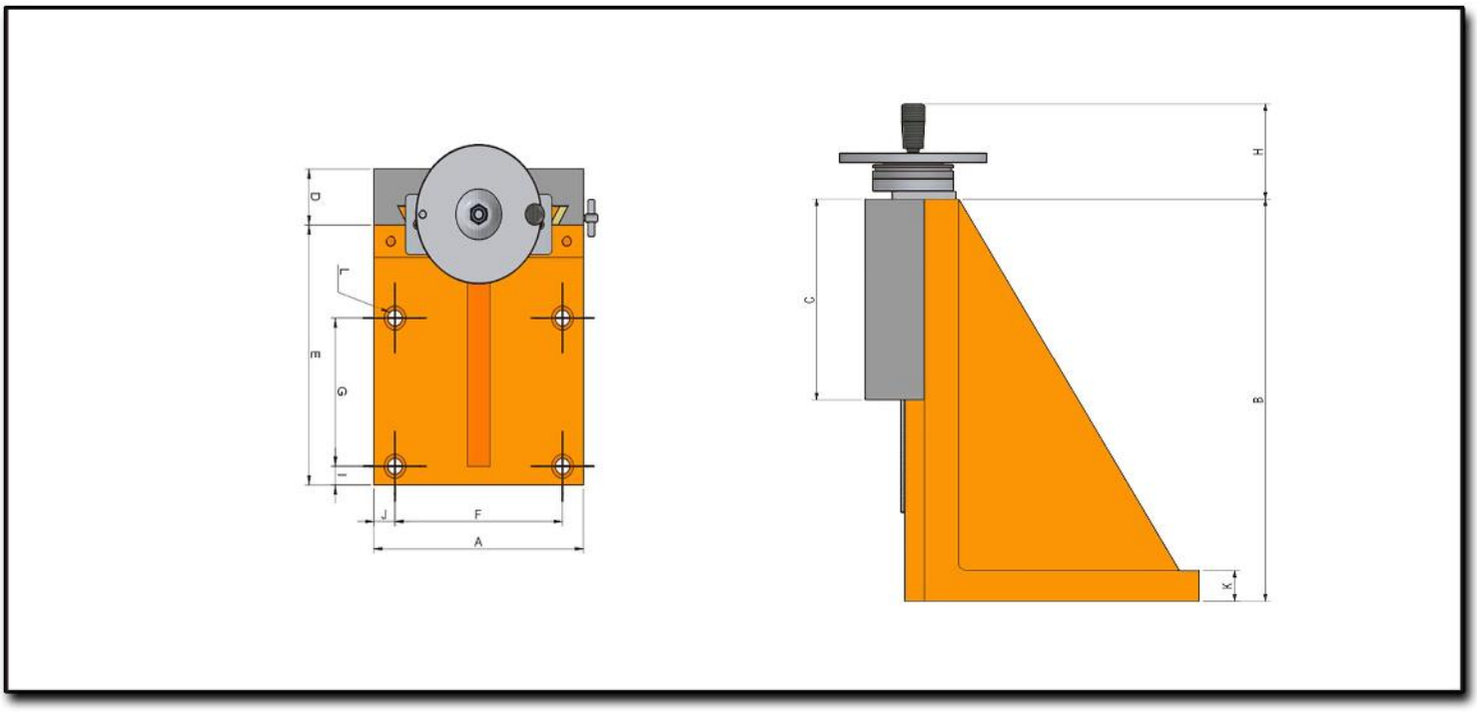
D
L
E
G
I
J
F
A
H
C
B
K

Characteristics & Dimensions

MODEL	VAS-150
A	*150.00*
B	*385.00*
C	*200.00*
D	*40.00*
E	*181.00*
F	*110.00*
G	*90.00*
H	*130.00*
I	*20.00*
J	*20.00*
K	*35.00*
L	*Ø4.00 ~ 13.00 | 23.00 x 1.00*
Total Device Weight ***(Kg)***	*31.00*

*** Roundness ≤ 0.003 mm.*
**** All dimensions are given in millimeters.*

VAS-200

Angular Vertical Slide

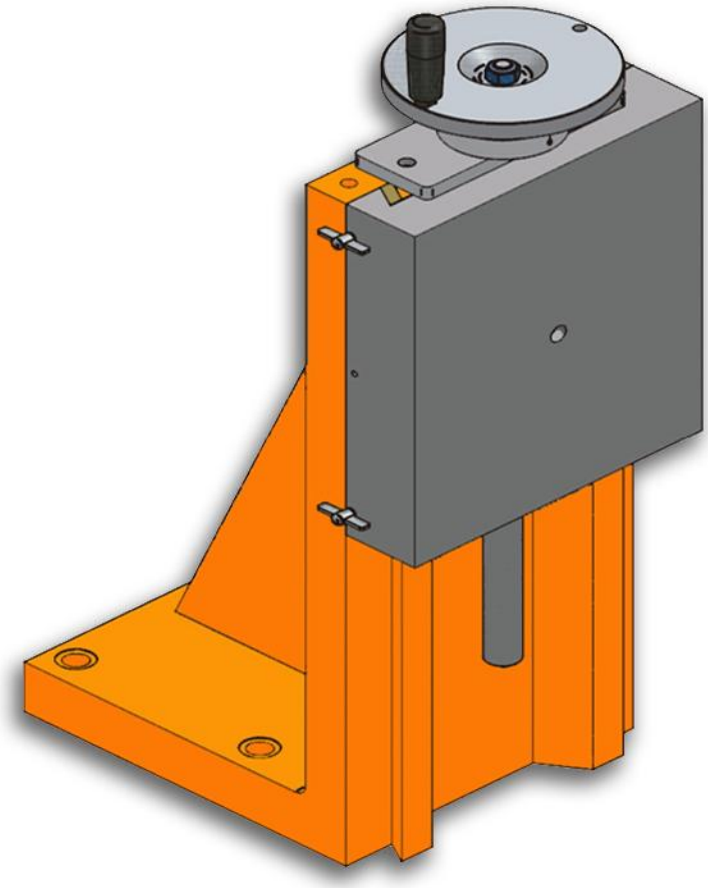

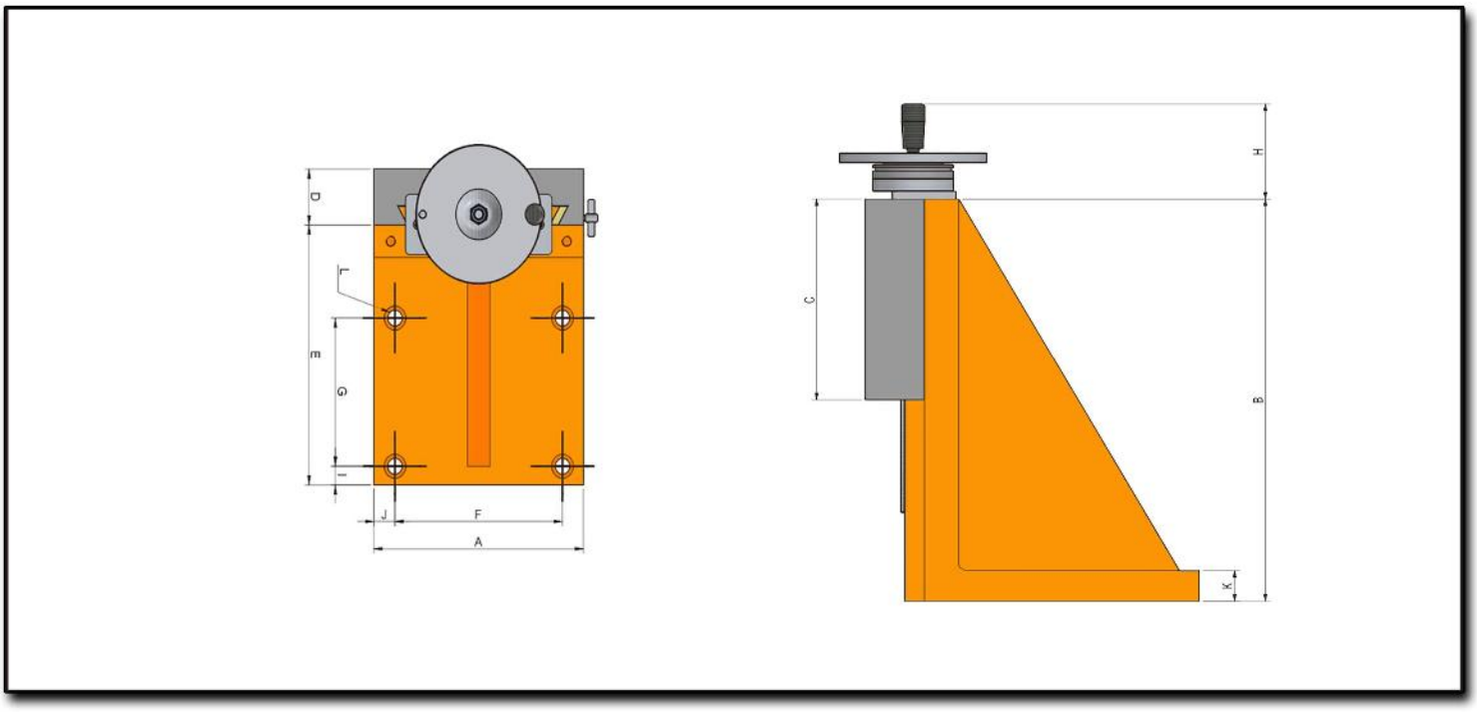
D
L
E
G
I
J
F
A
H
C
B
K

Characteristics & Dimensions

MODEL	VAS-200
A	*200.00*
B	*510.00*
C	*250.00*
D	*60.00*
E	*235.00*
F	*160.00*
G	*140.00*
H	*142.00*
I	*20.00*
J	*20.00*
K	*45.00*
L	*Ø4.00 ~ 17.50 | 26.00 x 1.00*
Total Device Weight ***(Kg)***	*67.00*

*** Roundness ≤ 0.003 mm.*
**** All dimensions are given in millimeters.*

VAS-250

Angular Vertical Slide

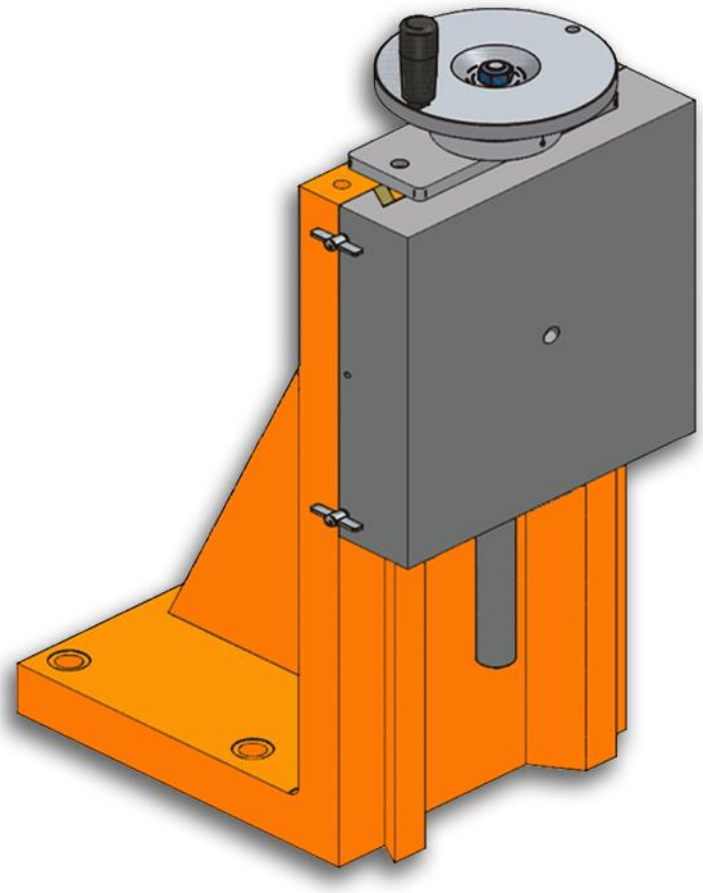

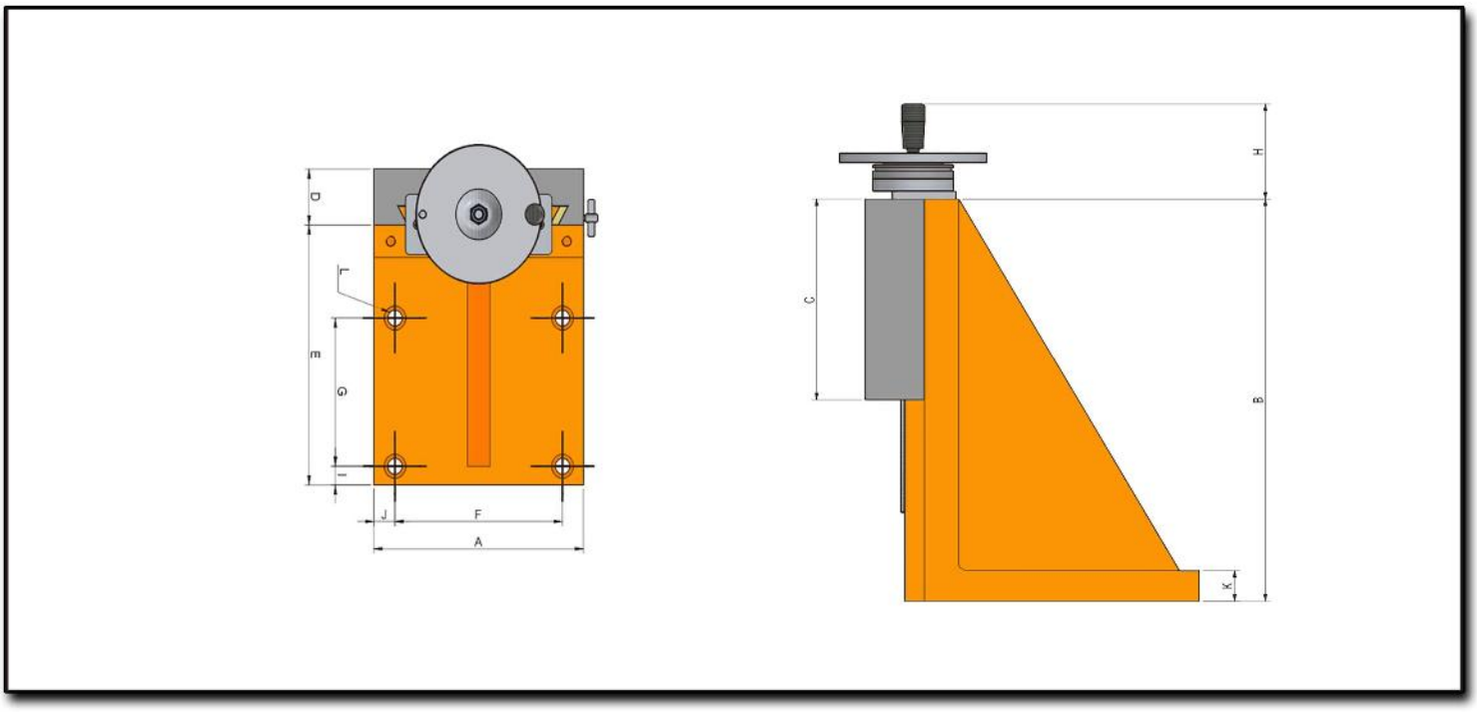
D
L
E
G
I
J
F
A
H
C
B
K

Characteristics & Dimensions

MODEL	VAS-250
A	*250.00*
B	*600.00*
C	*300.00*
D	*60.00*
E	*280.00*
F	*200.00*
G	*160.00*
H	*142.00*
I	*20.00*
J	*250.00*
K	*45.00*
L	*Ø4.00 ~ 17.50 | 26.00 x 1.00*
Total Device Weight ***(Kg)***	*115.00*

*** Roundness ≤ 0.003 mm.*
**** All dimensions are given in millimeters.*

VAS II SERIES

ANGULAR VERTICAL SLIDE

VAS220-300/420

Hi Peformance Manual
Vertical Slide
With Lead Screw

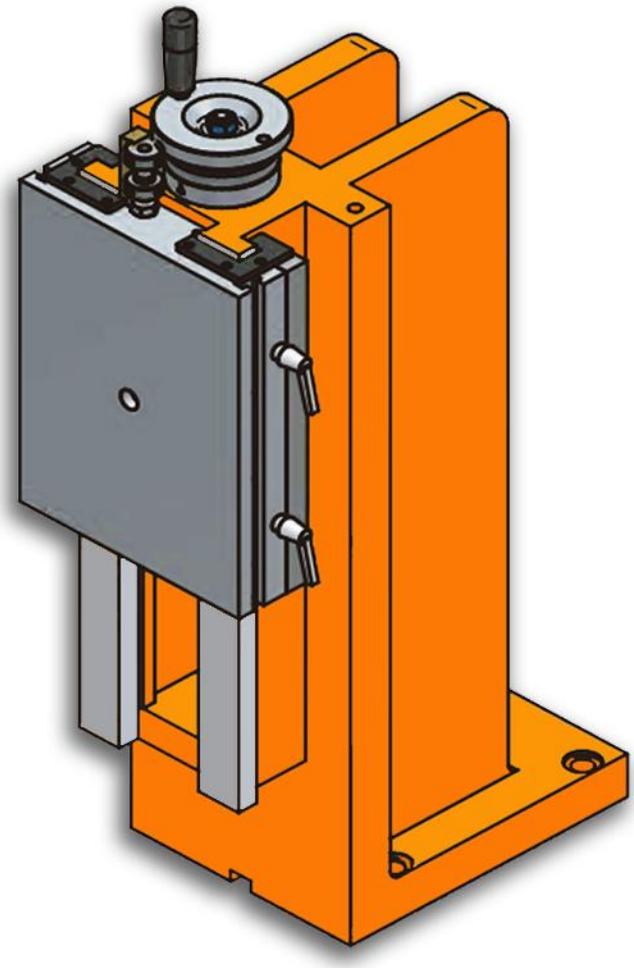

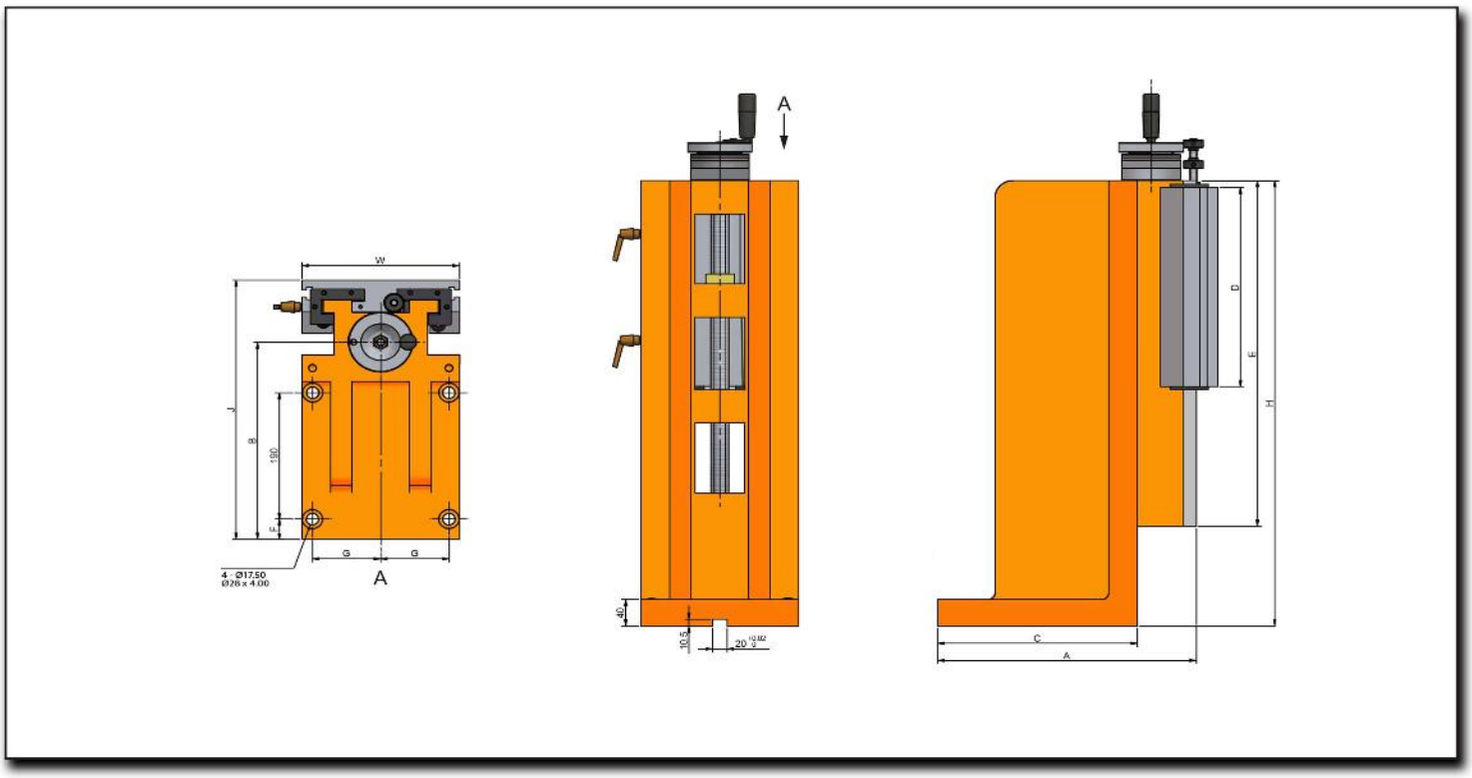
W
J
B
180
G
G
4 - Ø17.50
Ø26 x 4.00
A
A
40
10.5
20
C
A
D
F
H

Characteristics & Dimensions

MODEL	VAS220-300/420
A	*360.00*
B	*297.00*
C	*278.00*
D	*300.00*
E	*420.00*
F	*30.00*
G	*95.00*
J	*390.00*
W	*220.00*
H	*420.00*
Maximum Slide Stroke ***("Z" Axis)***	*100.00*
Total Device Weight ***(Kg)***	*107.00*

*** Roundness ≤ 0.003 mm.*
**** All dimensions are given in millimeters.*

VAS220-300/670

Hi Peformance Manual
Vertical Slide
With Lead Screw

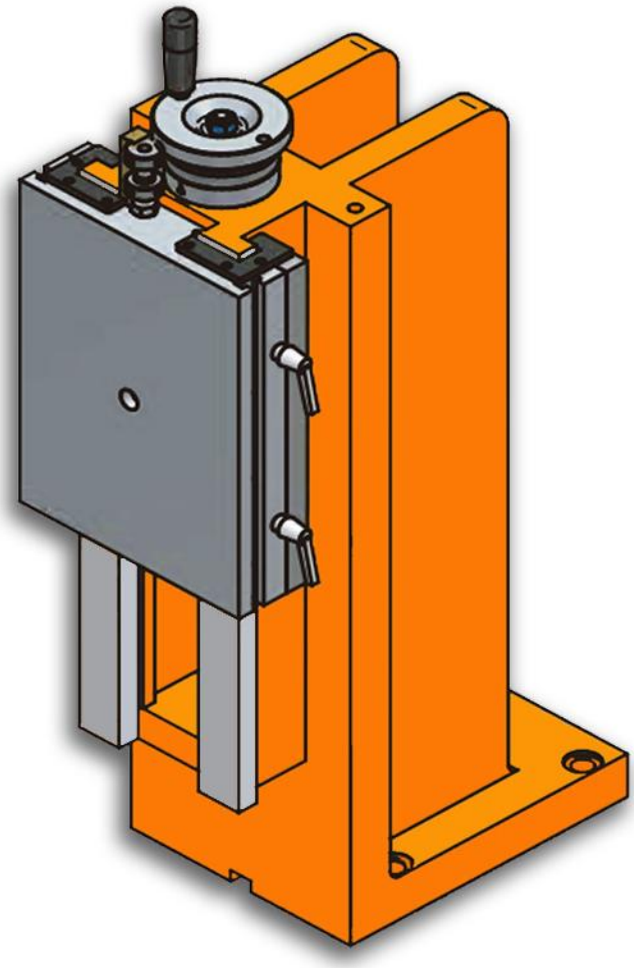

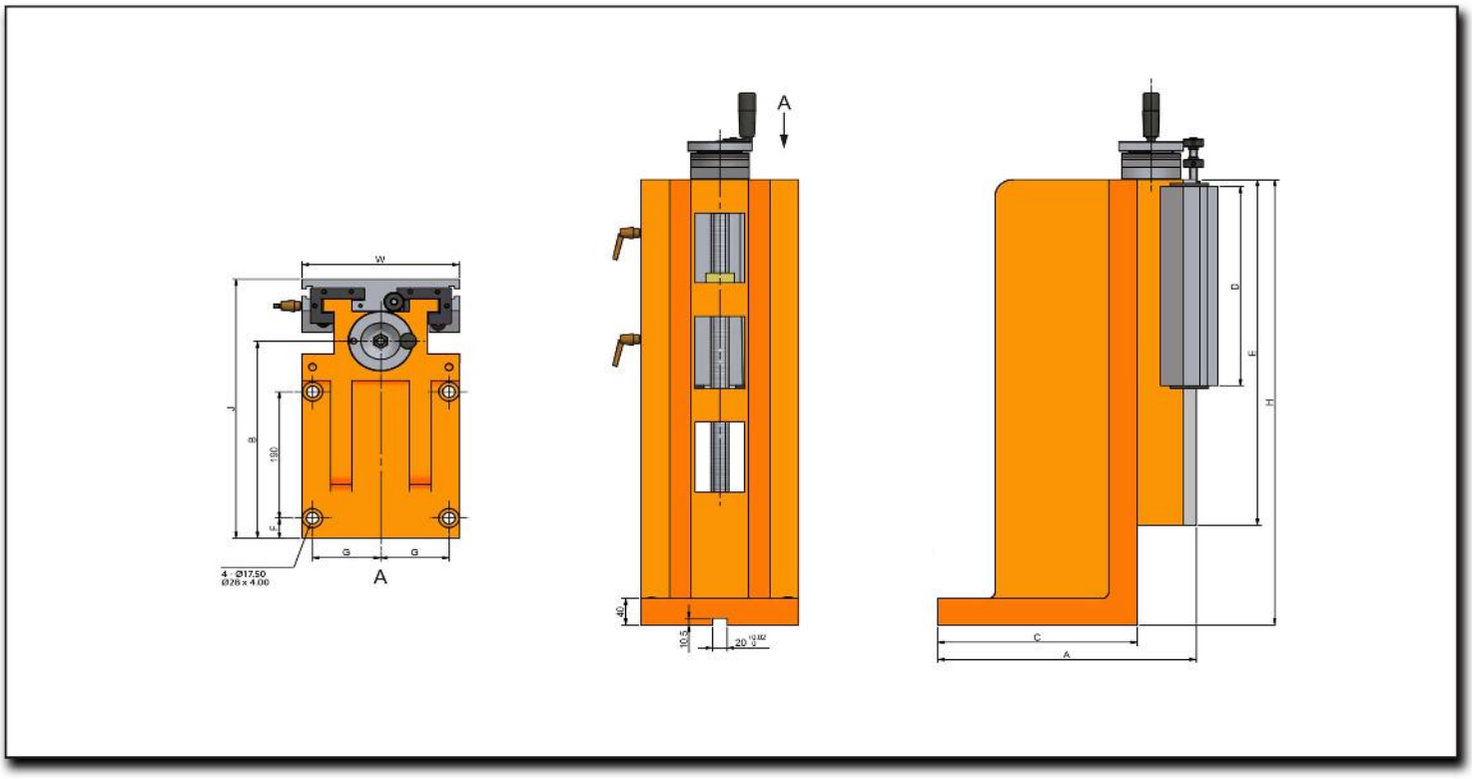
W
J
B
180
G
G
4 - Ø17.50
Ø26 x 4.00
A
A
40
10.5
20
C
A
D
F
H

Characteristics & Dimensions

MODEL	VAS220-300/670
A	*360.00*
B	*297.00*
C	*278.00*
D	*300.00*
E	*520.00*
F	*30.00*
G	*95.00*
J	*390.00*
W	*220.00*
H	*670.00*
Maximum Slide Stroke ***("Z" Axis)***	*200.00*
Total Device Weight ***(Kg)***	*139.00*

*** Roundness ≤ 0.003 mm.*
**** All dimensions are given in millimeters.*

VAS300-360/540

Hi Peformance Manual
Vertical Slide
With Lead Screw

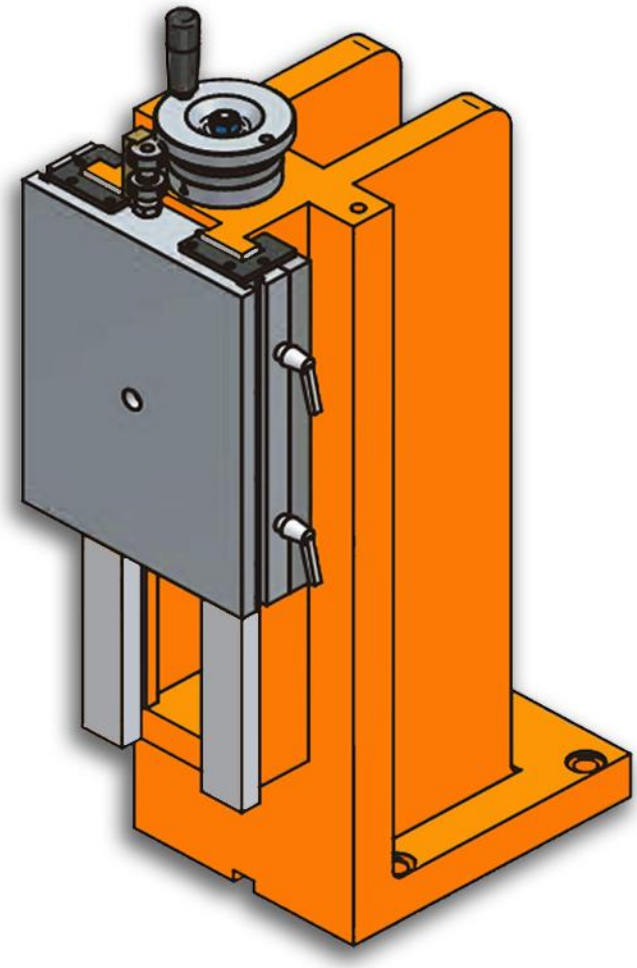

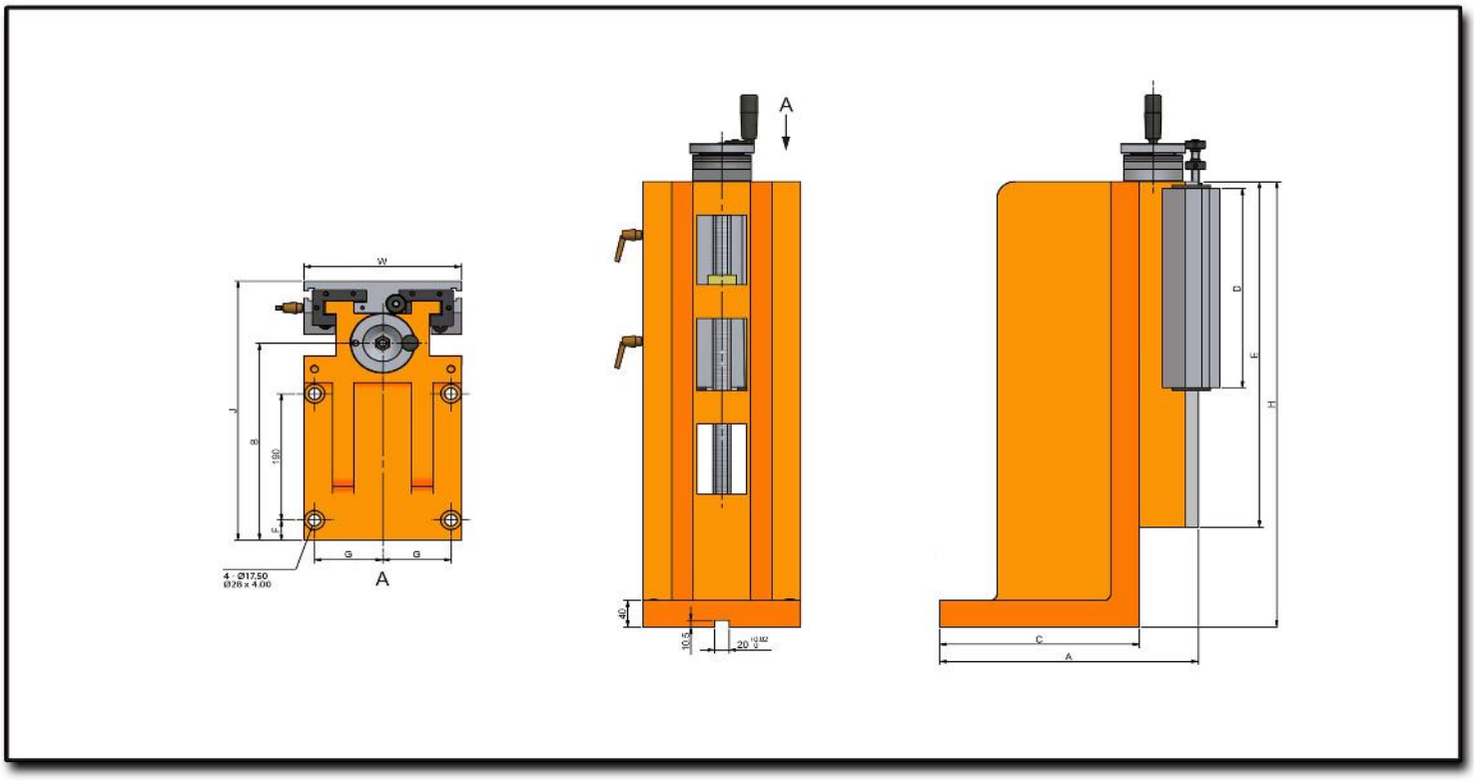
W
J
B
180
G
G
4 - Ø17.50
Ø26 x 4.00
A
A
40
10.5
20
C
A
D
F
H

Characteristics & Dimensions

MODEL	VAS300-360/540
A	*400.00*
B	*330.00*
C	*273.00*
D	*360.00*
E	*500.00*
F	*25.00*
G	*130.00*
J	*450.00*
W	*300.00*
H	*540.00*
Maximum Slide Stroke ***("Z" Axis)***	*120.00*
Total Device Weight ***(Kg)***	*185.00*

*** Roundness ≤ 0.003 mm.*
**** All dimensions are given in millimeters.*

VAS300-360/720

Hi Peformance Manual
Vertical Slide
With Lead Screw

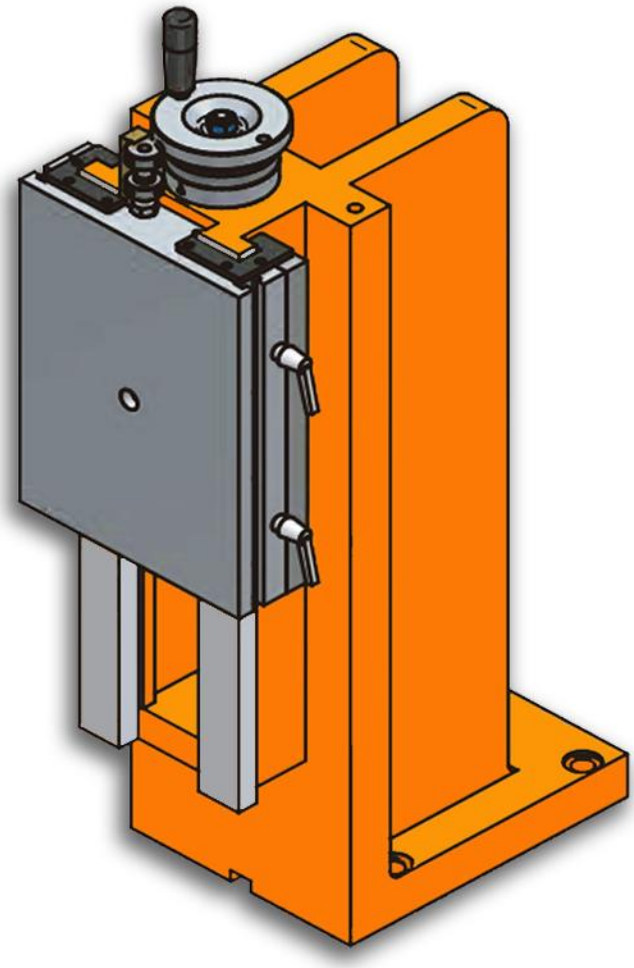

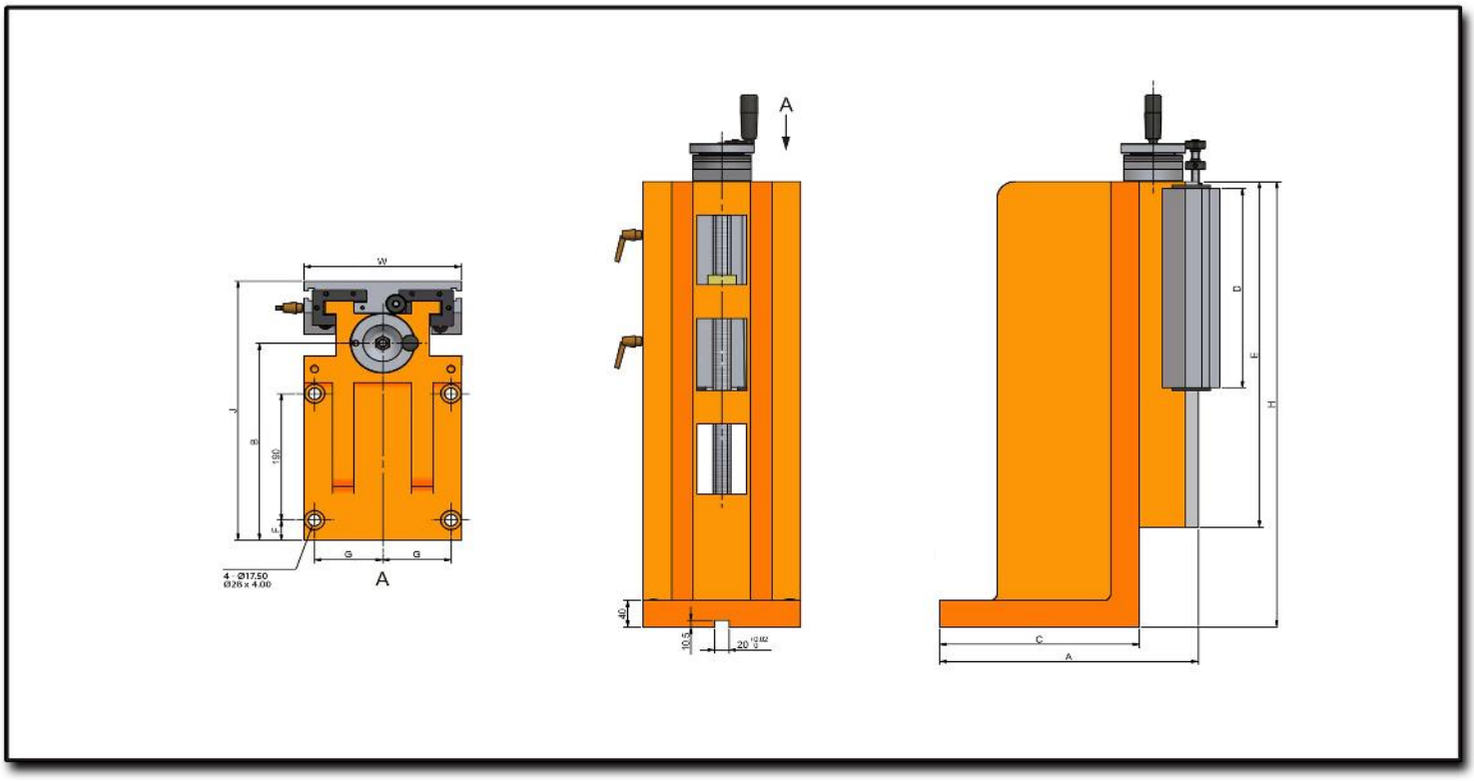
W
J
B
180
G
G
4 - Ø17.50
Ø26 x 4.00
A
A
40
10.5
20
C
A
D
E
H

Characteristics & Dimensions

MODEL	VAS300-360/720
A	*400.00*
B	*330.00*
C	*273.00*
D	*360.00*
E	*600.00*
F	*25.00*
G	*130.00*
J	*450.00*
W	*300.00*
H	*720.00*
Maximum Slide Stroke ***("Z" Axis)***	*220.00*
Total Device Weight ***(Kg)***	*231.00*

*** Roundness ≤ 0.003 mm.*
**** All dimensions are given in millimeters.*

VAS360-360/920

Hi Peformance Manual
Vertical Slide
With Lead Screw

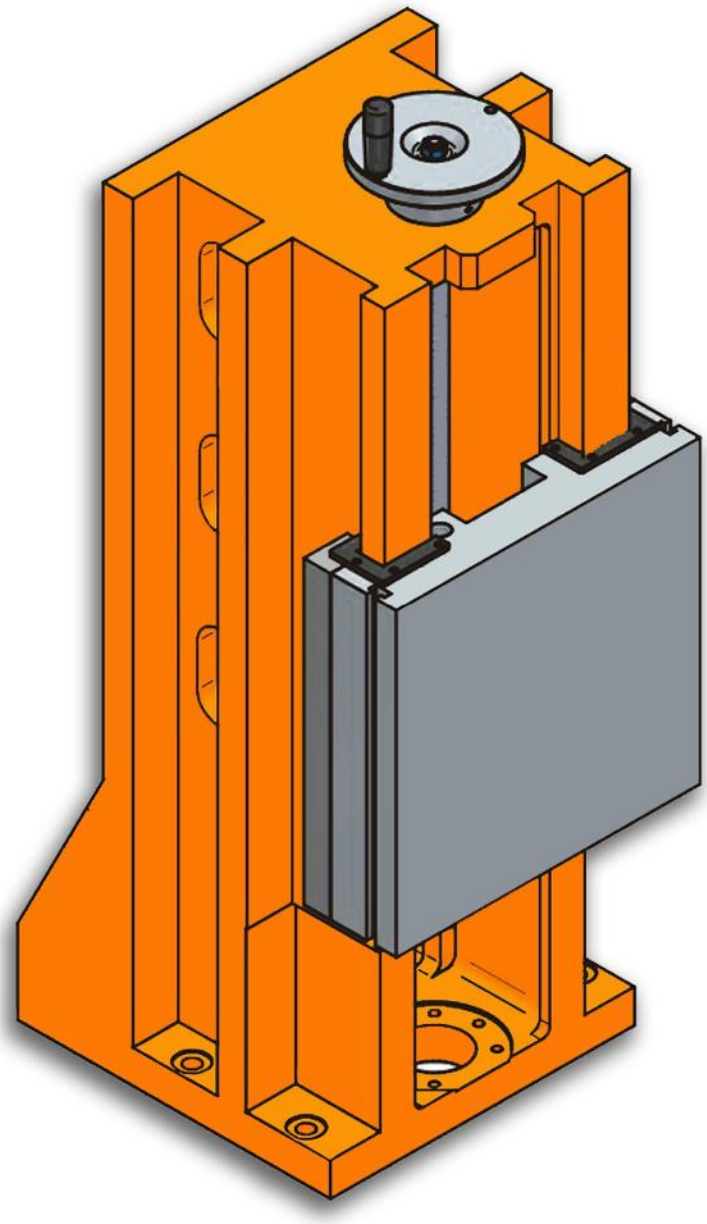

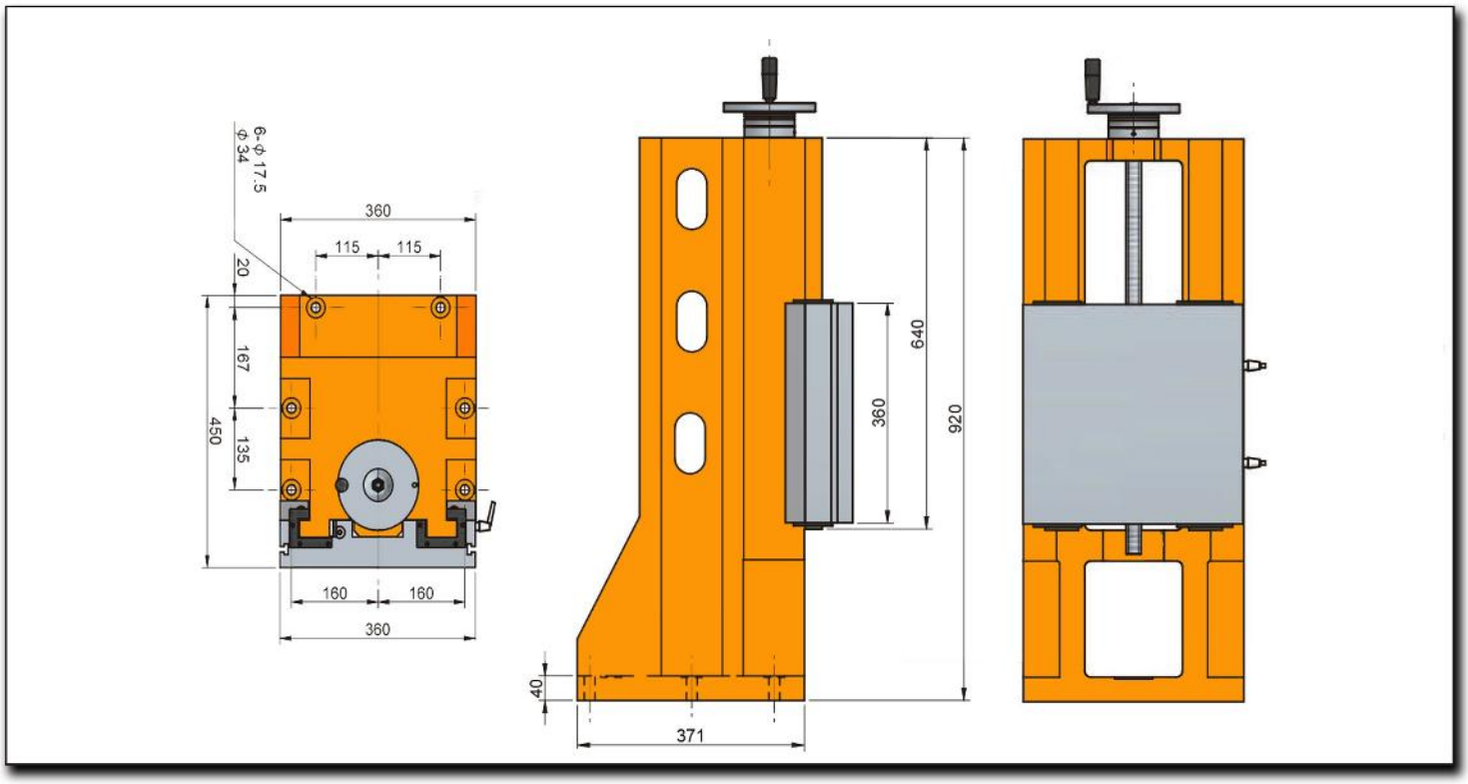
6-ϕ 17.5
ϕ 34
360
115
115
20
167
135
450
160
160
360
640
360
920
40
371

Characteristics & Dimensions

MODEL	VAS360-360/920
A	*372.00*
B	*322.00*
C	-
D	*360.00*
E	*640.00*
F	*20.00*
G	*115.00*
J	*450.00*
W	*360.00*
H	*920.00*
Maximum Slide Stroke ***("Z" Axis)***	*260.00*
Total Device Weight ***(Kg)***	*275.00*

*** Roundness ≤ 0.003 mm.*
**** All dimensions are given in millimeters.*

VCHH SERIES

HYDRAULIC VERTICAL CROSSED SLIDING TABLES WITH LEAD SCREW

VCHH220-300/420

Hydraulic Crossed Sliding Table With Lead Screw

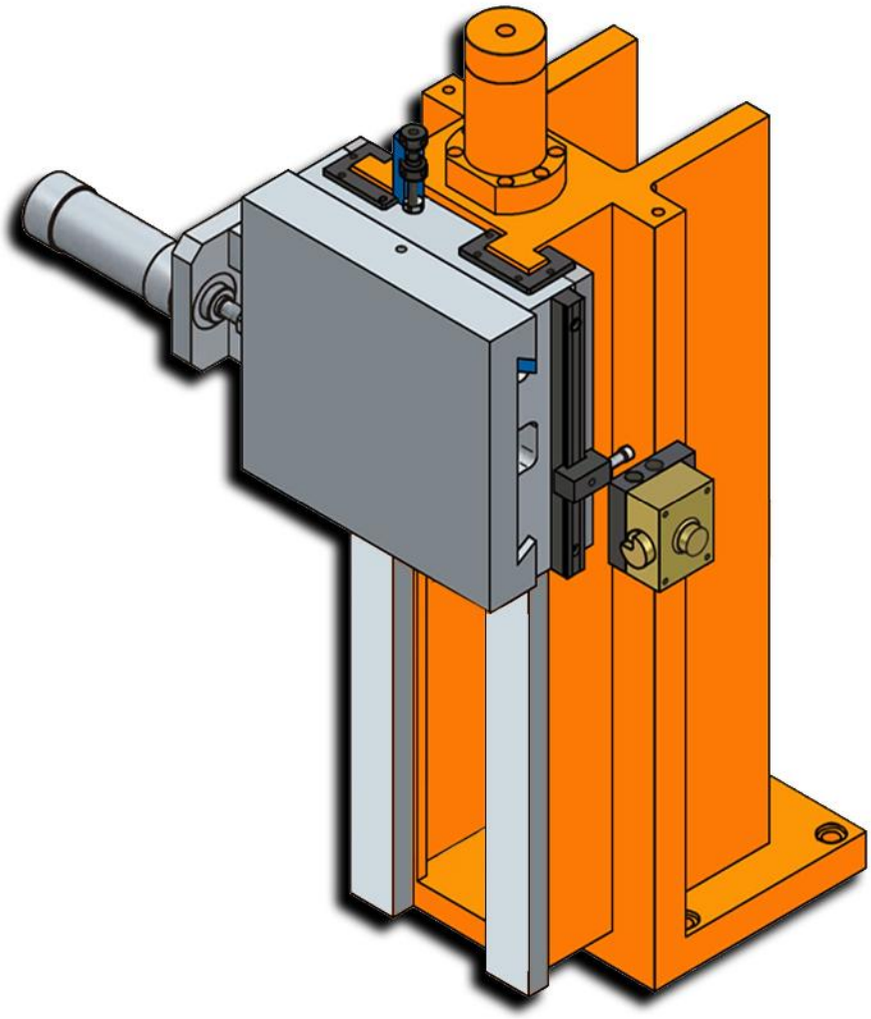

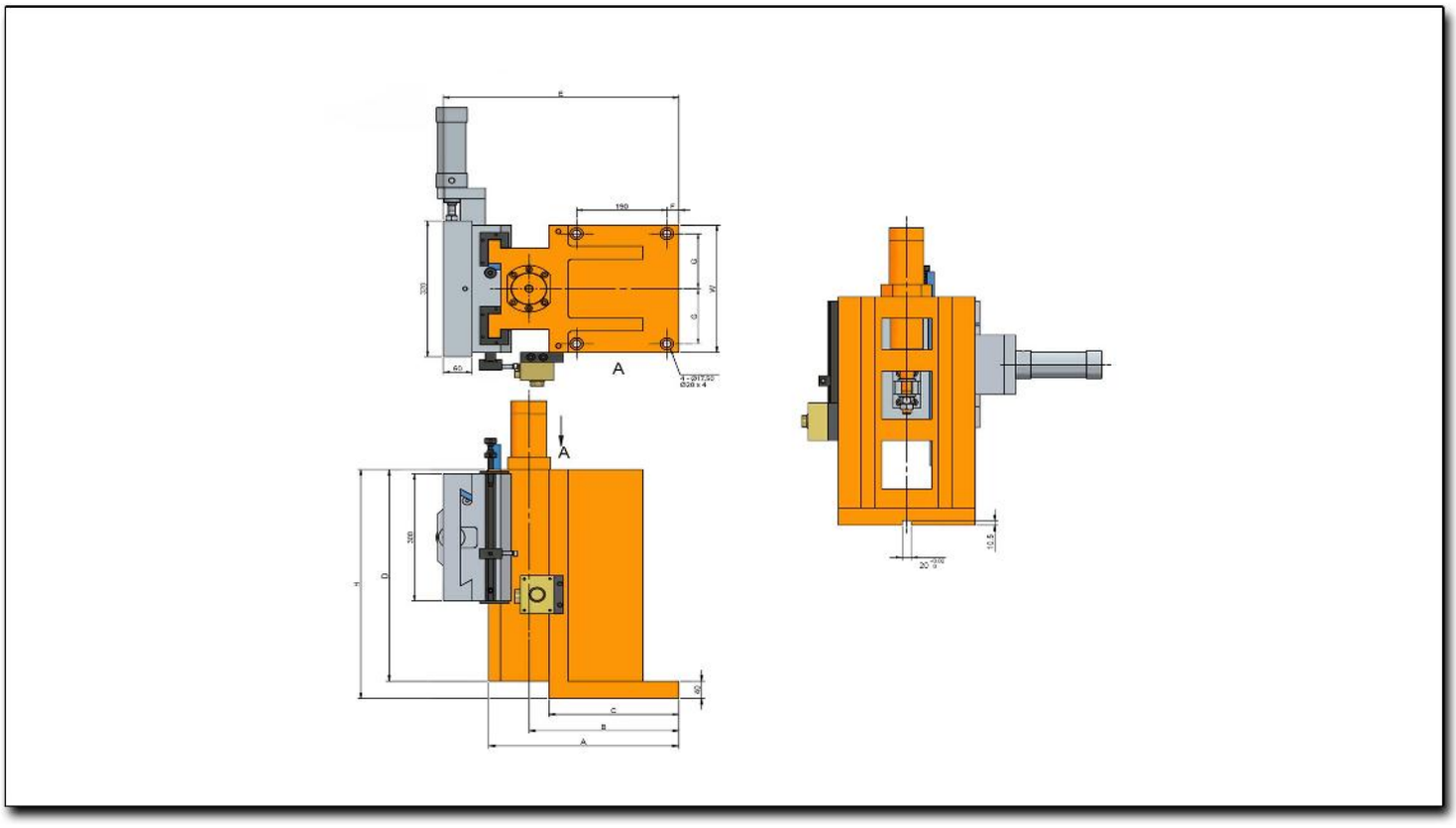
A
A
C
B
A

Characteristics & Dimensions

MODEL	VCHH220-300/420
A	*360.00*
B	*297.00*
C	*278.00*
D	*420.00*
E	*460.00*
F	*30.00*
G	*95.00*
W	*220.00*
H	*420.00*
Maximum Slide Stroke *("X" Axe)*	*50.00*
Maximum Slide Stroke *("Y" Axe)*	*100.00*

*** Roundness ≤ 0.003 mm.*
**** All dimensions are given in millimeters.*

VCHH220-300/670

Hydraulic Crossed Sliding Table With Lead Screw

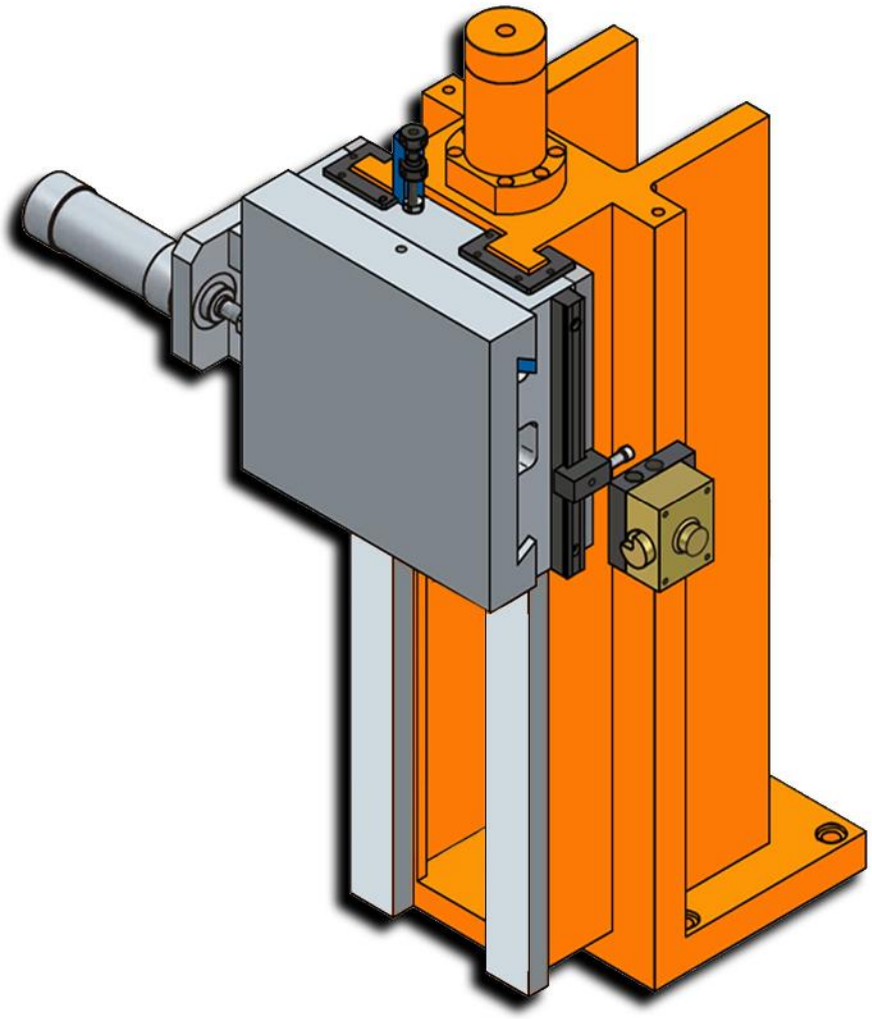

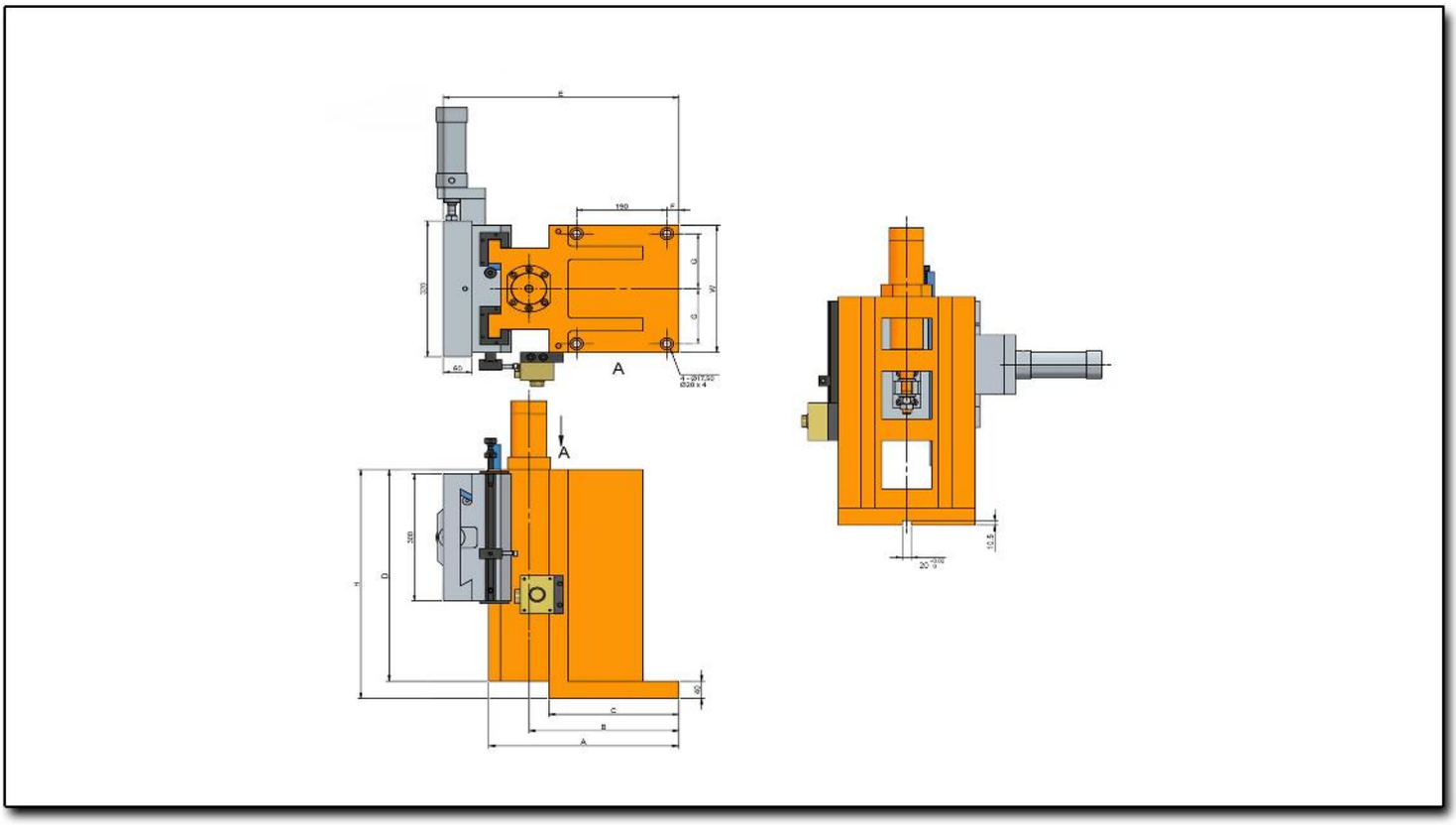
A
A
B
C

Characteristics & Dimensions

MODEL	VCHH220-300/670
A	*360.00*
B	*297.00*
C	*278.00*
D	*520.00*
E	*460.00*
F	*30.00*
G	*95.00*
W	*220.00*
H	*670.00*
Maximum Slide Stroke ***("X" Axe)***	*50.00*
Maximum Slide Stroke ***("Y" Axe)***	*200.00*

*** Roundness ≤ 0.003 mm.*
**** All dimensions are given in millimeters.*

VCHH300-300/540

Hydraulic Crossed Sliding Table With Lead Screw

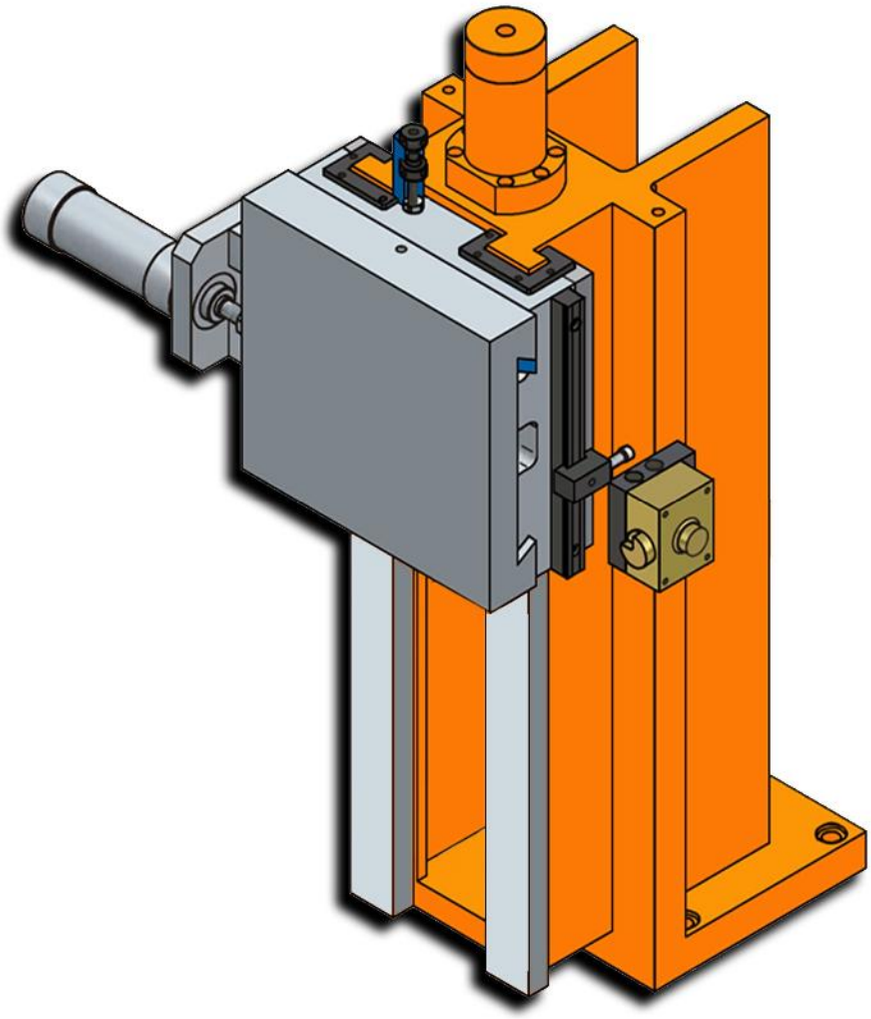

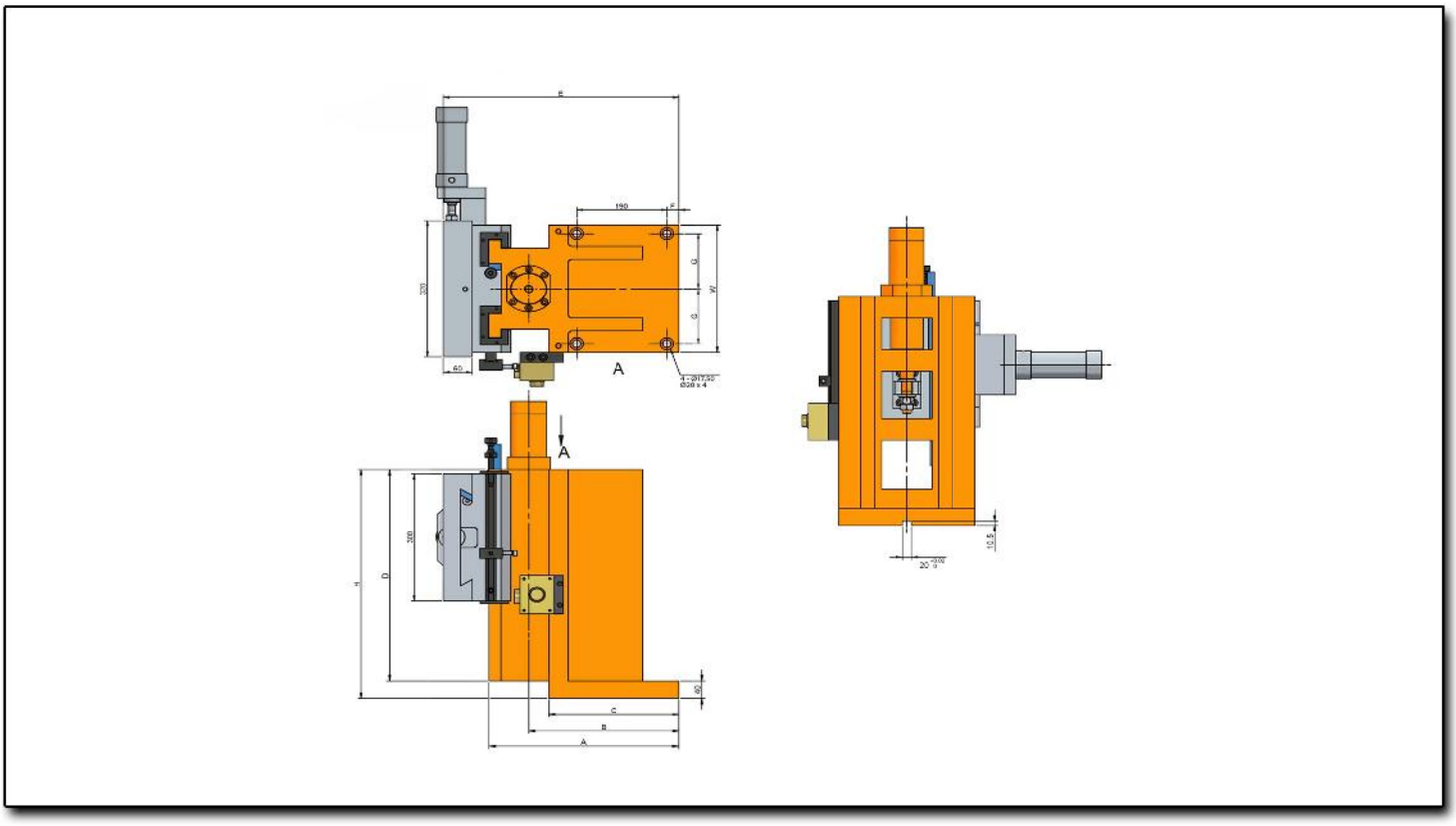
A
A
C
B
A

Characteristics & Dimensions

MODEL	VCHH300-300/540
A	*400.00*
B	*315.00*
C	*273.00*
D	*500.00*
E	*495.00*
F	*25.00*
G	*130.00*
W	*300.00*
H	*540.00*
Maximum Slide Stroke ***("X" Axe)***	*60.00*
Maximum Slide Stroke ***("Y" Axe)***	*180.00*

*** Roundness ≤ 0.003 mm.*
**** All dimensions are given in millimeters.*

VCHH300-300/720

Hydraulic Crossed Sliding Table With Lead Screw

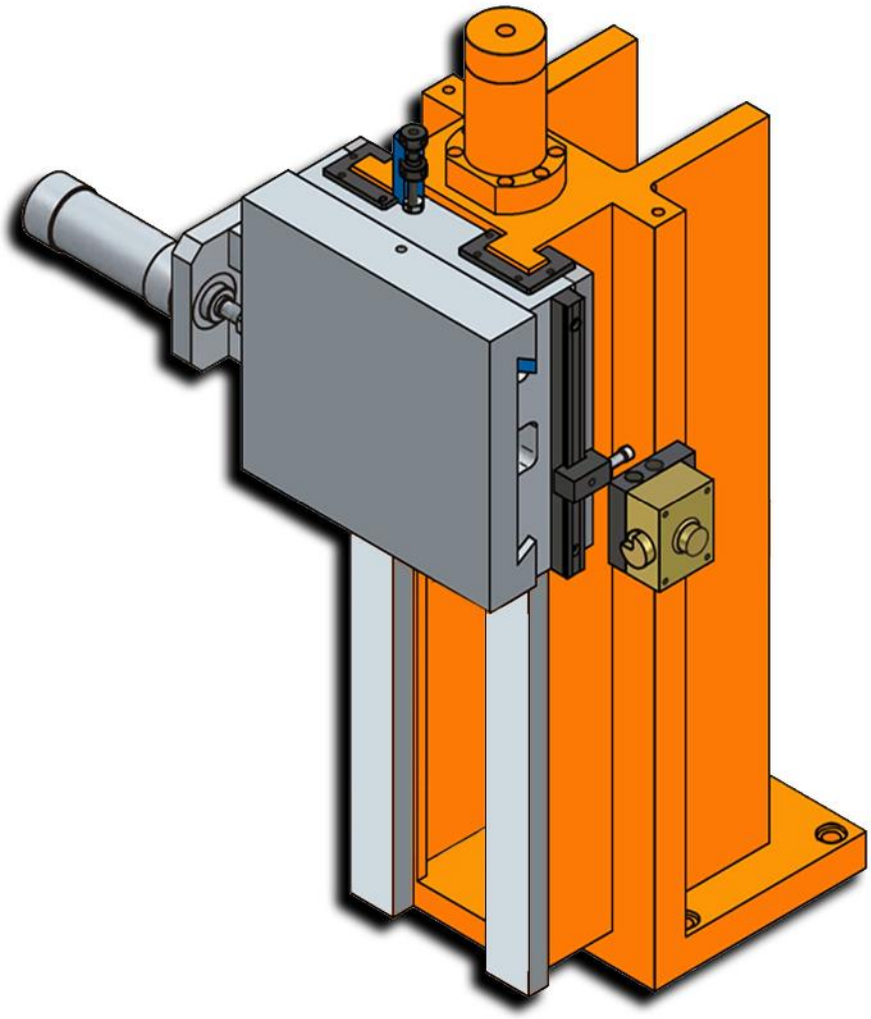

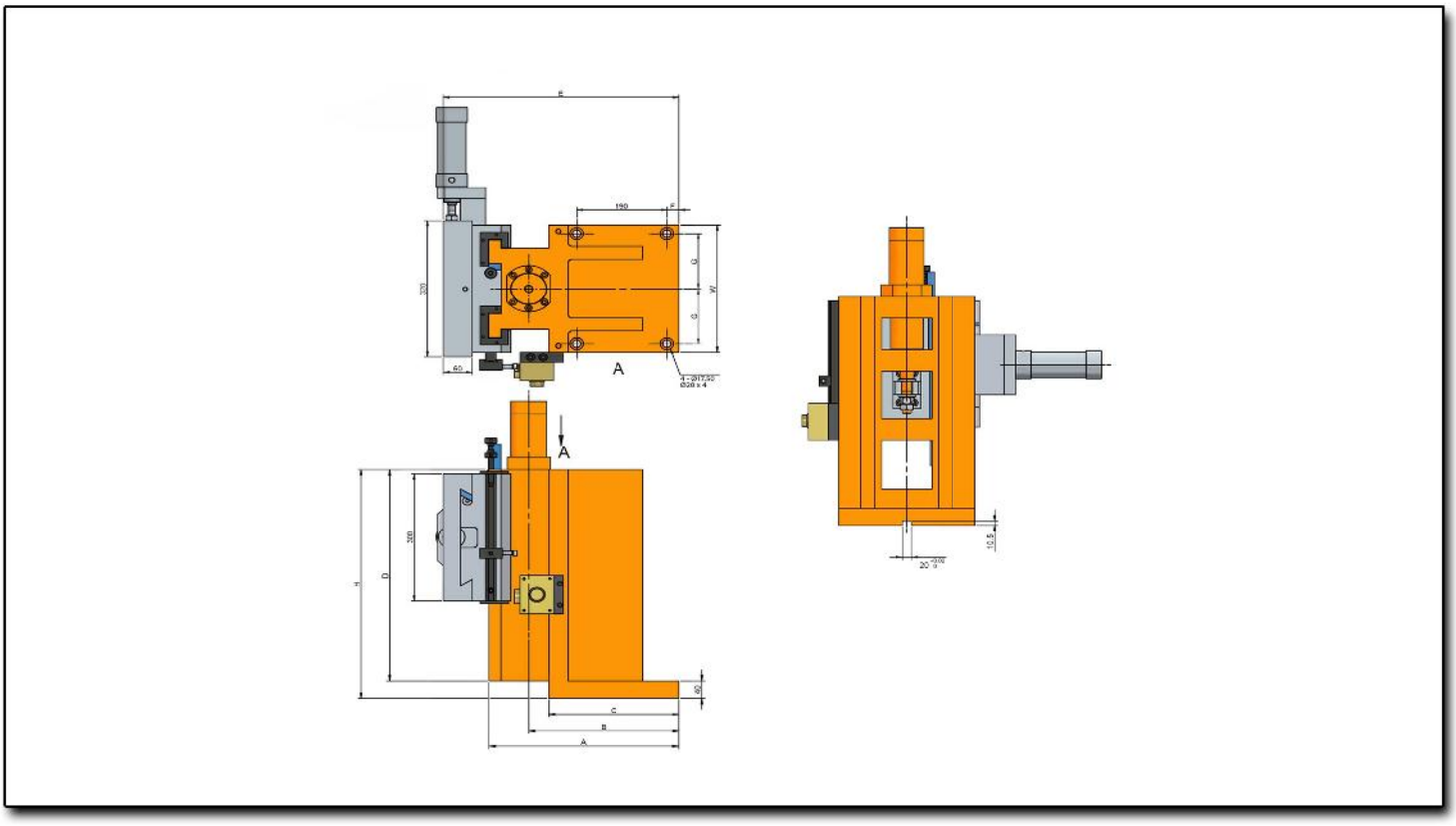
A
A

Characteristics & Dimensions

MODEL	VCHH300-300/720
A	*400.00*
B	*315.00*
C	*273.00*
D	*600.00*
E	*495.00*
F	*25.00*
G	*130.00*
W	*300.00*
H	*720.00*
Maximum Slide Stroke ***("X" Axe)***	*60.00*
Maximum Slide Stroke ***("Y" Axe)***	*280.00*

*** Roundness ≤ 0.003 mm.*
**** All dimensions are given in millimeters.*

VCHS SERIES

MIXED CROSSED SLIDE TABLE WITH LEAD SCREW

(MANUAL+HYDRAULIC)

VCHS220-300/420

Vertical Mixed Crossed Sliding Table With Lead Screw

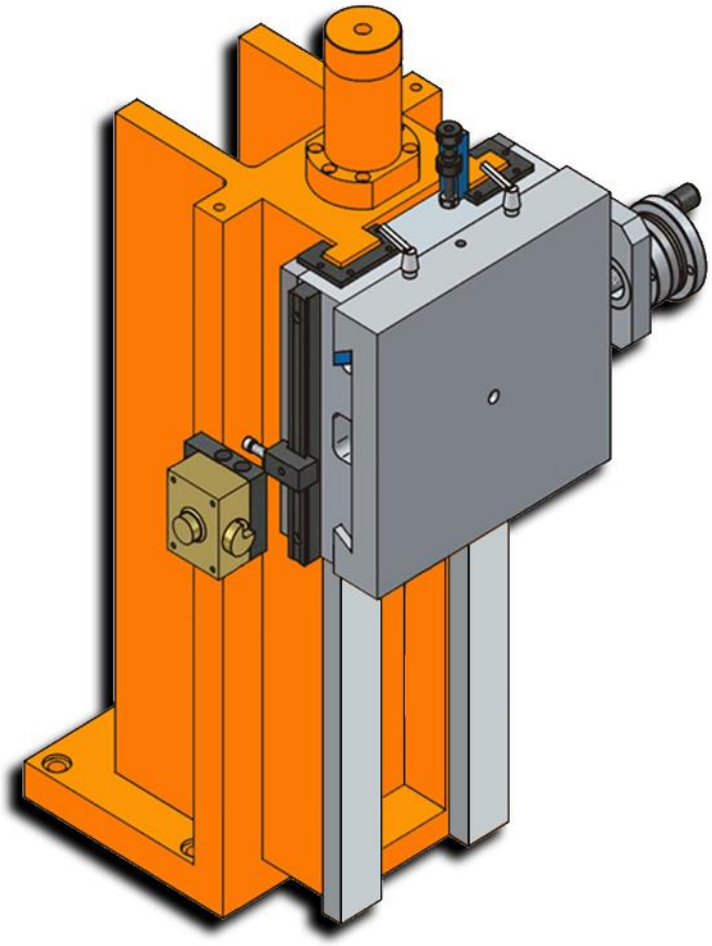

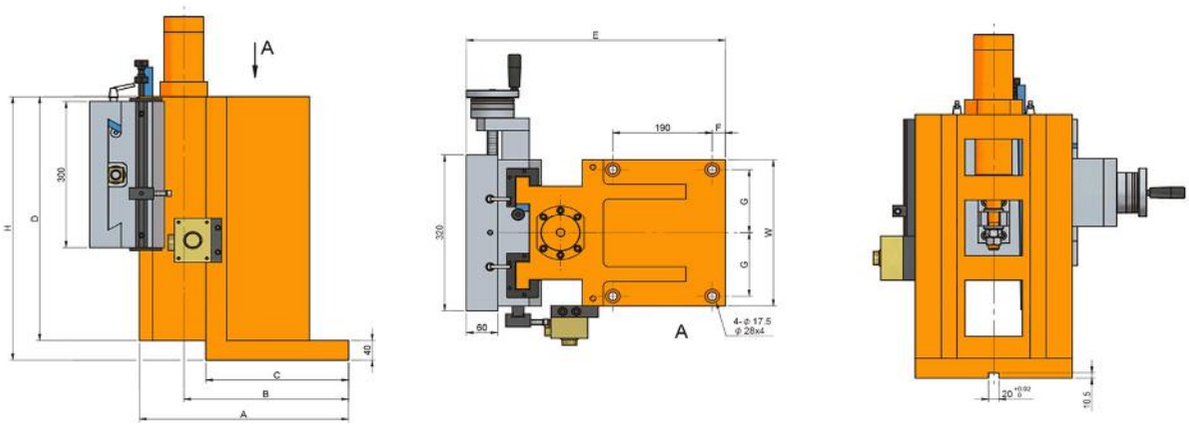
A
300
H
D
40
C
B
A
E
190
F
320
G
W
G
60
A
4-ø 17.5
ø 28x4
20
10.5

Characteristics & Dimensions

MODEL	VCHS220-300/420
A	*360.00*
B	*297.00*
C	*278.00*
D	*420.00*
E	*460.00*
F	*30.00*
G	*95.00*
W	*220.00*
H	*420.00*
Maximum Slide Stroke *("X" Axe)*	*50.00*
Maximum Slide Stroke *("Y" Axe)*	*100.00*

*** Roundness ≤ 0.003 mm.*
**** All dimensions are given in millimeters.*

VCHS220-300/670

Vertical Mixed Crossed Sliding Table With Lead Screw

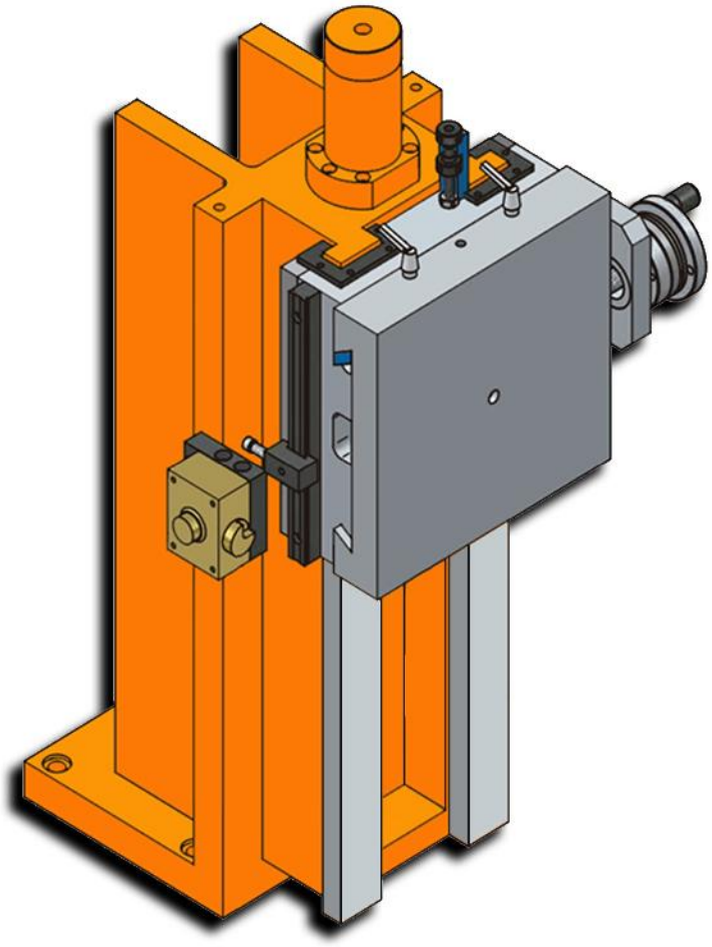

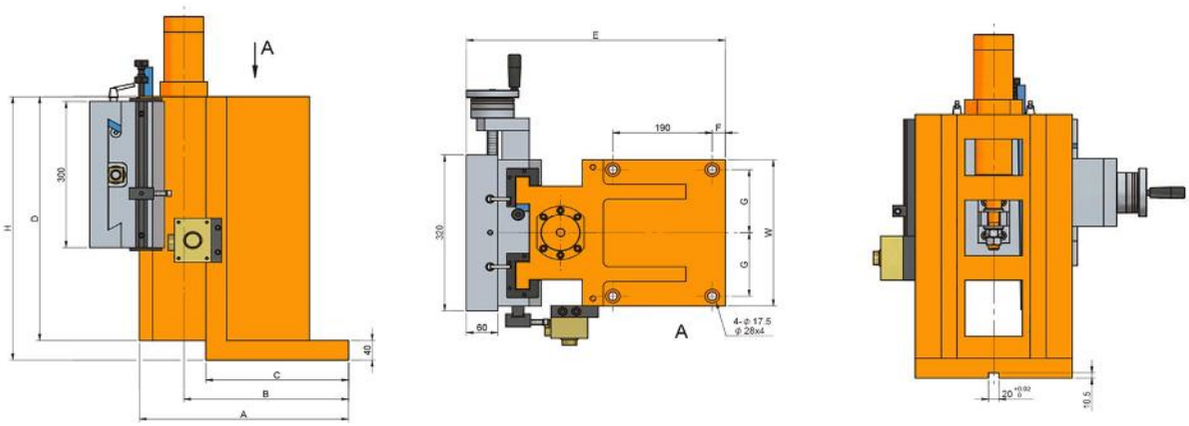
A
300
H
D
40
C
B
A
E
190
F
320
G
W
G
60
A
4-ø 17.5
ø 28x4
20
10.5

Characteristics & Dimensions

MODEL	VCHS220-300/670
A	*360.00*
B	*297.00*
C	*278.00*
D	*520.00*
E	*460.00*
F	*30.00*
G	*95.00*
W	*220.00*
H	*670.00*
Maximum Slide Stroke *("X" Axe)*	*50.00*
Maximum Slide Stroke *("Y" Axe)*	*200.00*

*** Roundness ≤ 0.003 mm.*
**** All dimensions are given in millimeters.*

VCHS300-300/540

Vertical Mixed Crossed Sliding Table With Lead Screw

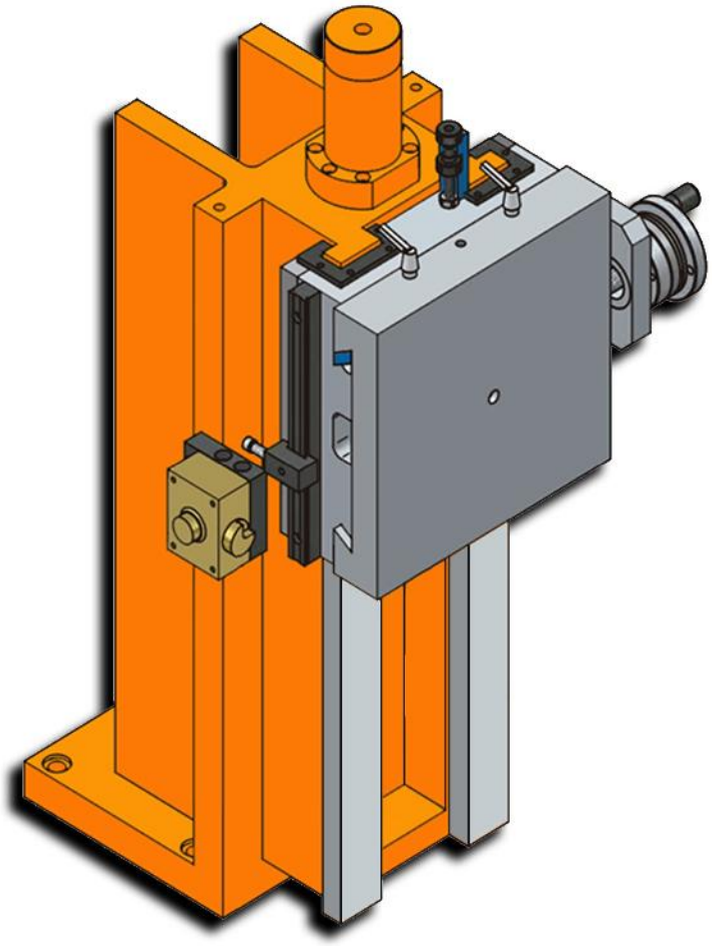

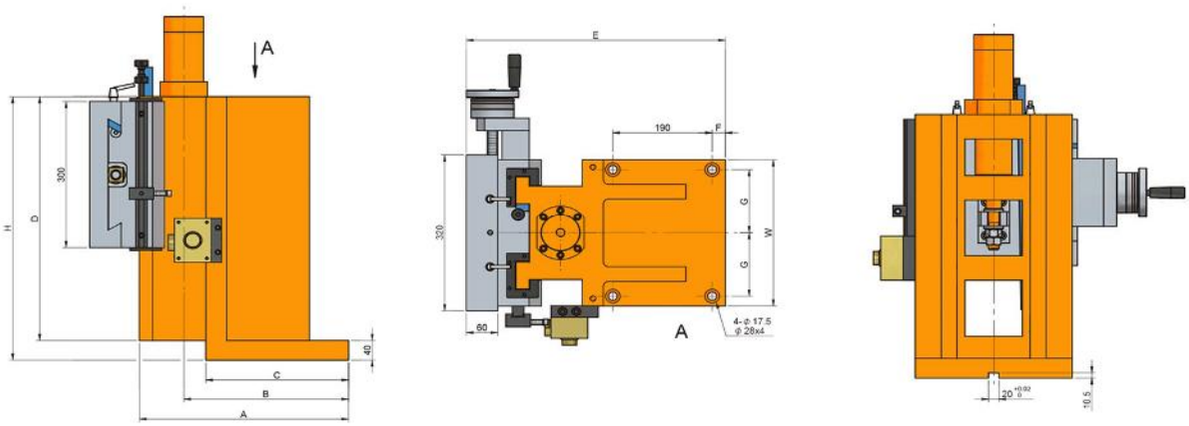
A
300
H
D
40
C
B
A
E
190
F
320
G
W
G
60
A
4-ø 17.5
ø 28x4
20
10.5

Characteristics & Dimensions

MODEL	VCHS300-300/540
A	*400.00*
B	*315.00*
C	*273.00*
D	*500.00*
E	*495.00*
F	*25.00*
G	*130.00*
W	*300.00*
H	*540.00*
Maximum Slide Stroke ***("X" Axe)***	*60.00*
Maximum Slide Stroke ***("Y" Axe)***	*180.00*

*** Roundness ≤ 0.003 mm.*
**** All dimensions are given in millimeters.*

VCHS300-300/720

Vertical Mixed Crossed Sliding Table With Lead Screw

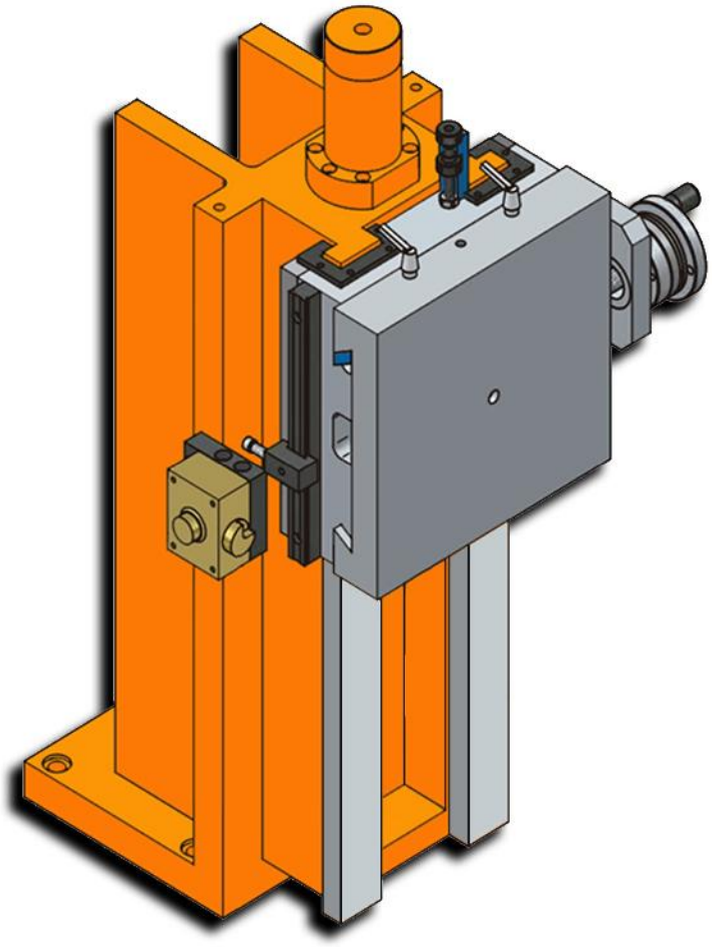

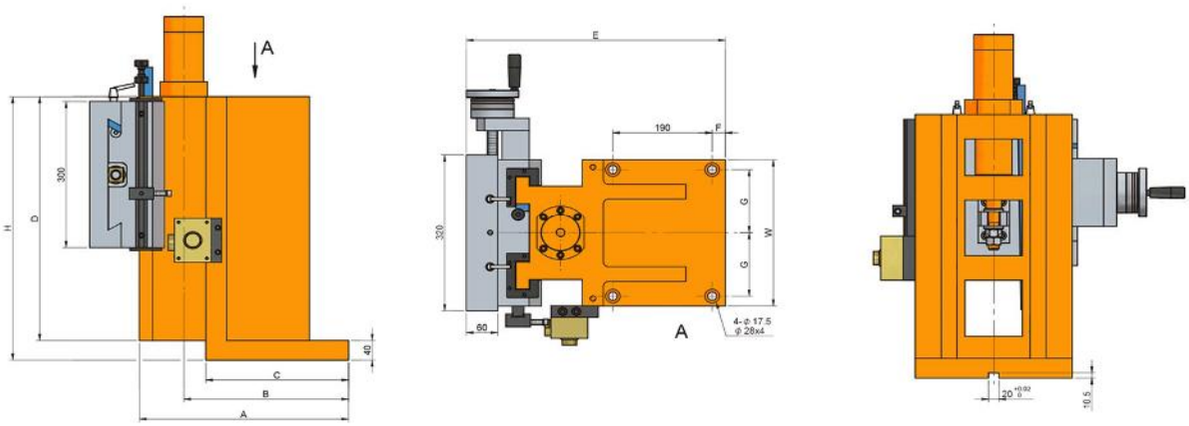
A
300
H
D
40
C
B
A
E
190
F
320
G
W
G
60
A
4-ø 17.5
ø 28x4
20
10.5

Characteristics & Dimensions

MODEL	VCHS300-300/720
A	*400.00*
B	*315.00*
C	*273.00*
D	*600.00*
E	*495.00*
F	*25.00*
G	*130.00*
W	*300.00*
H	*720.00*
Maximum Slide Stroke ***("X" Axe)***	*60.00*
Maximum Slide Stroke ***("Y" Axe)***	*280.00*

*** Roundness ≤ 0.003 mm.*
**** All dimensions are given in millimeters.*

VCSS SERIES

MANUAL CROSSED VERTICAL SLIDE TABLES WITH LEAD SCREW

VCSS220-300/420

Manual Vertical Crossed Sliding Table With Lead Screw

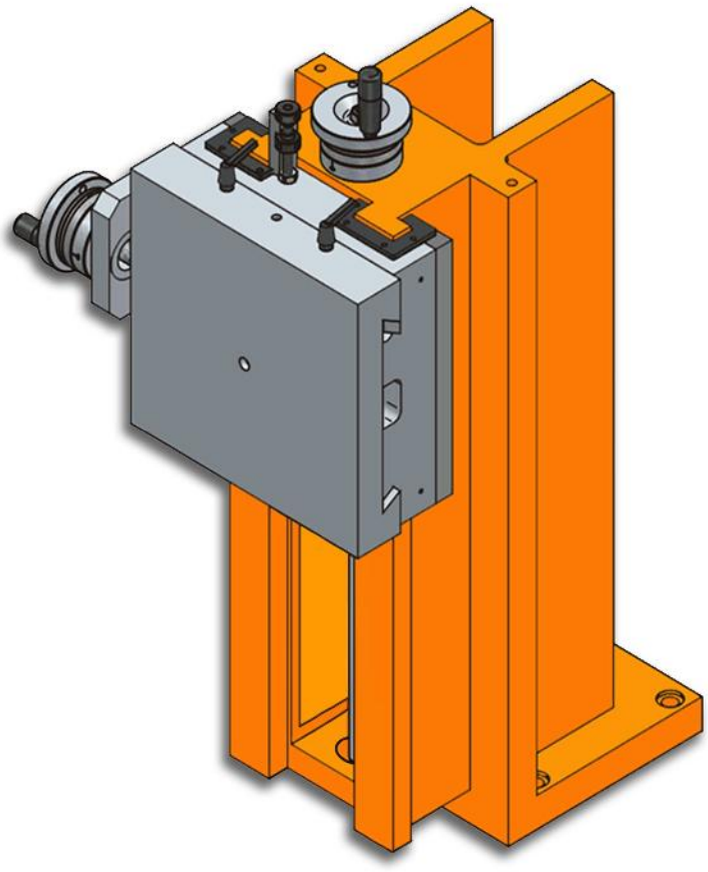

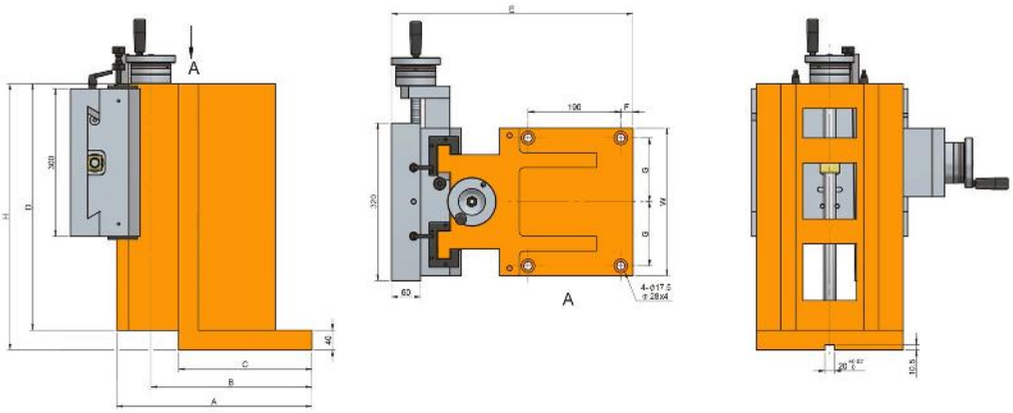
A
A
C
B
A
H
D
320
40
E
F
G
W
60
4-ø17.5
± 28x4
10.5

Characteristics & Dimensions

MODEL	VCSS220-300/420
A	*360.00*
B	*297.00*
C	*278.00*
D	*420.00*
E	*460.00*
F	*30.00*
G	*95.00*
W	*220.00*
H	*420.00*
Maximum Slide Stroke ("Z" Axe)	*100.00*
Total Device Weight (Kg)	*175.00*

*** Roundness ≤ 0.003 mm.*
**** All dimensions are given in millimeters.*

VCSS220-300/670

Manual Vertical Crossed Sliding Table With Lead Screw

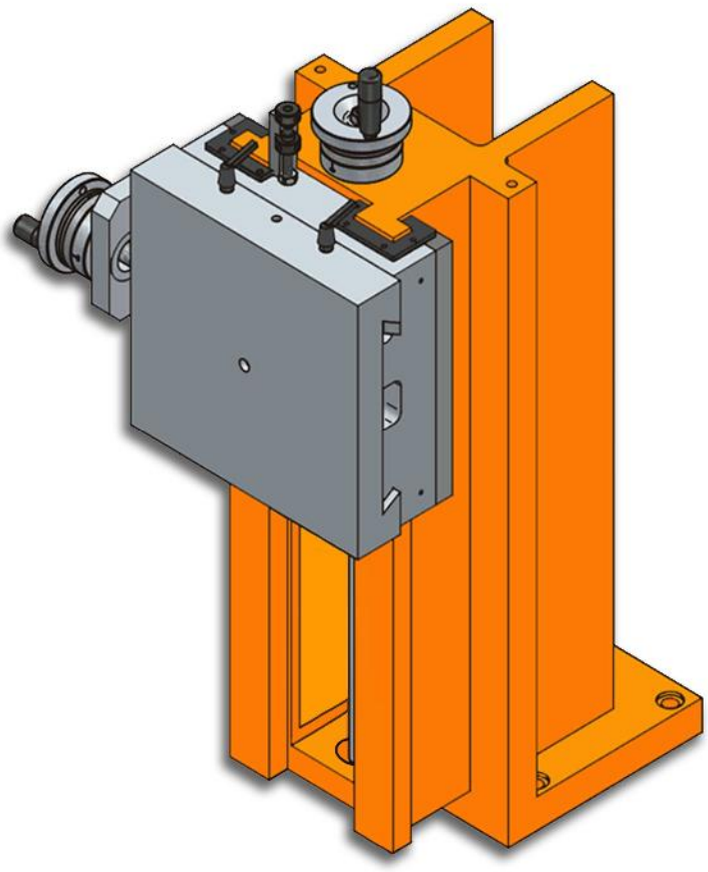

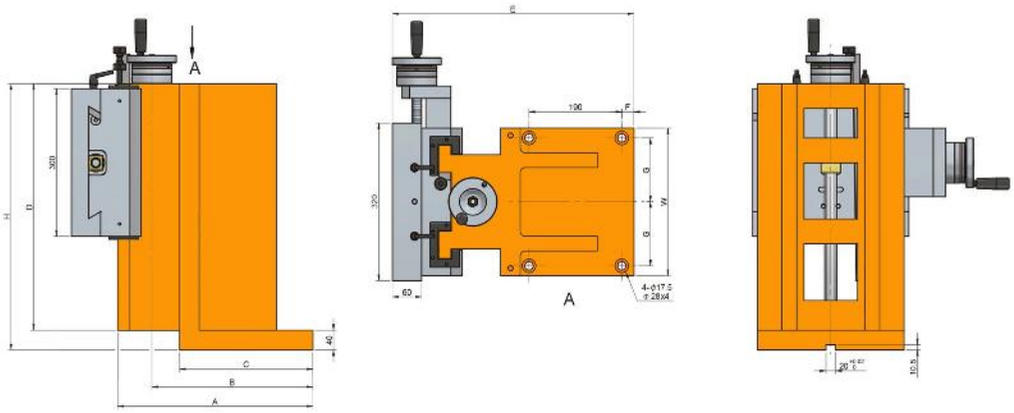
A
A
C
B
A
H
D
320
40
E
190
F
G
W
G
320
60
4-ø17.5
± 28x4
10.5

Characteristics & Dimensions

MODEL	VCSS220-300/670
A	*360.00*
B	*297.00*
C	*278.00*
D	*520.00*
E	*460.00*
F	*30.00*
G	*95.00*
W	*220.00*
H	*670.00*
Maximum Slide Stroke ("Z" Axe)	*200.00*
Total Device Weight (Kg)	*207.00*

*** Roundness ≤ 0.003 mm.*
**** All dimensions are given in millimeters.*

VCSS300-300/540

Manual Vertical Crossed Sliding Table With Lead Screw

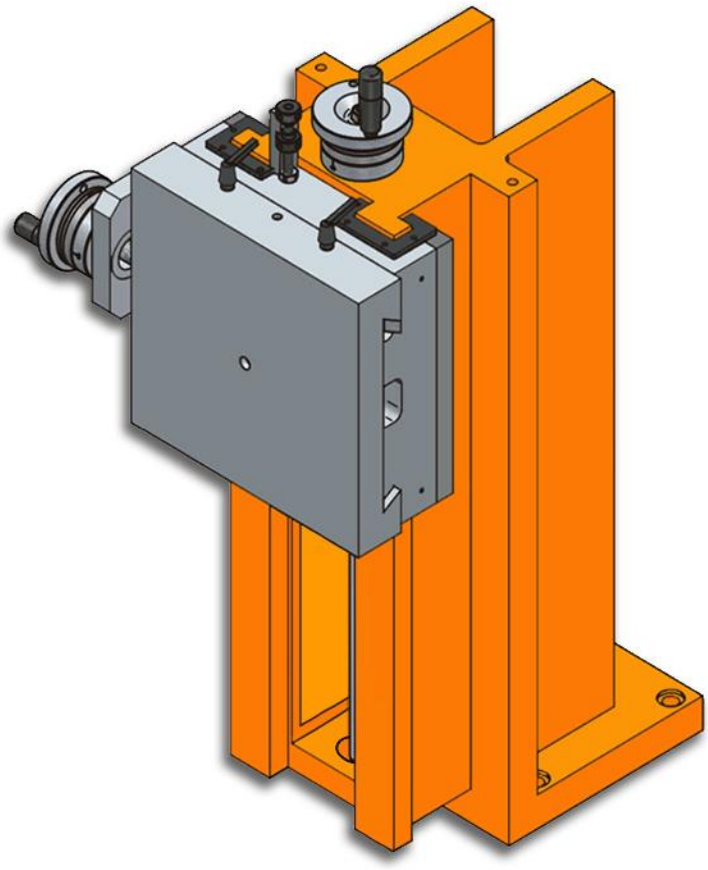

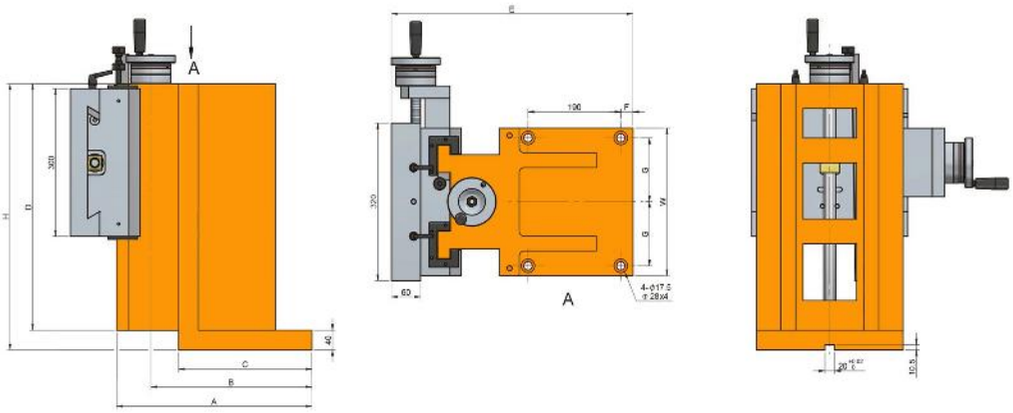
A
A
C
B
A
H
D
320
40
E
190
F
G
W
G
320
60
4-ø17.5
± 28x4
10.5

Characteristics & Dimensions

MODEL	VCSS300-300/540
A	*400.00*
B	*330.00*
C	*273.00*
D	*500.00*
E	*495.00*
F	*25.00*
G	*130.00*
W	*300.00*
H	*540.00*
Maximum Slide Stroke ("Z" Axe)	*180.00*
Total Device Weight (Kg)	*252.00*

** Roundness ≤ 0.003 mm.
*** All dimensions are given in millimeters.

VCSS300-300/720

Manual Vertical Crossed Sliding Table With Lead Screw

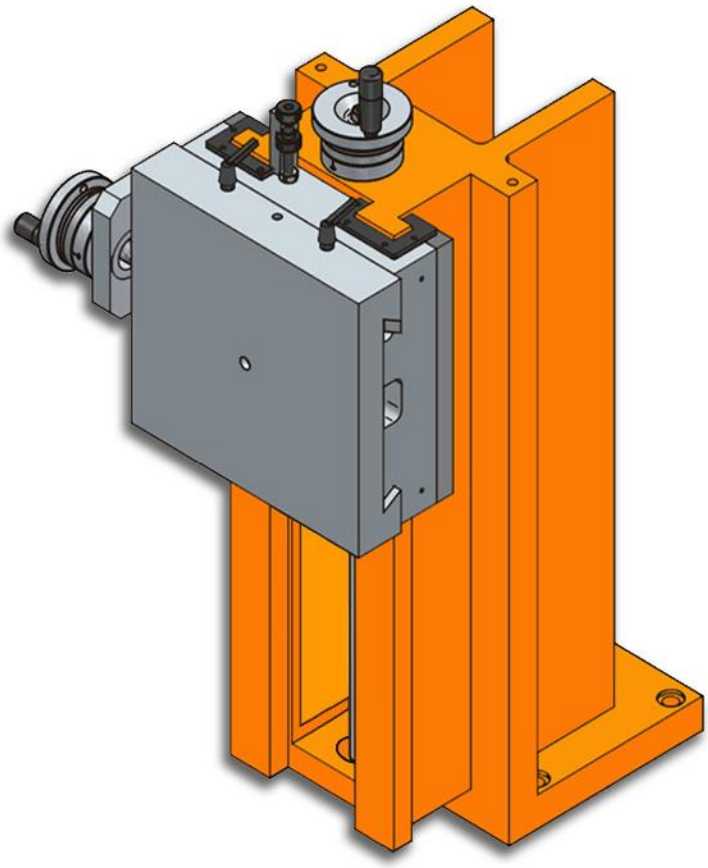

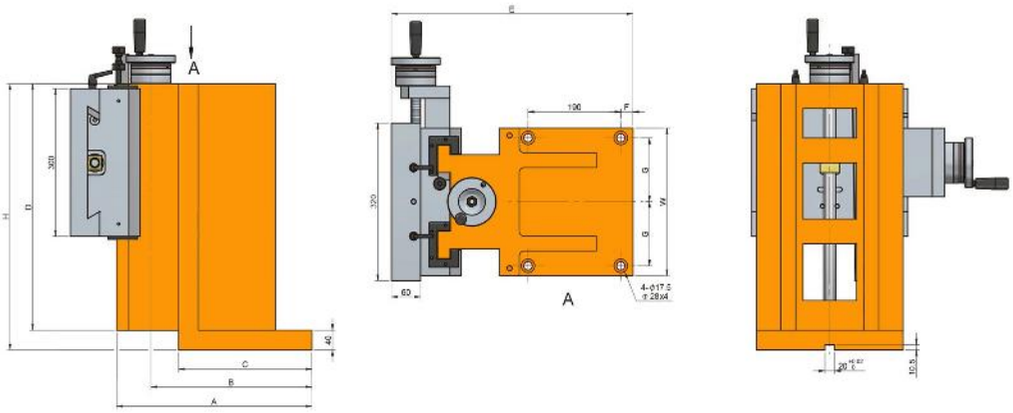
A
A
C
B
A
H
D
320
40
E
190
F
G
W
G
320
60
4-ø17.5
± 28x4
10.5

Characteristics & Dimensions

MODEL	VCSS300-300/720
A	*400.00*
B	*330.00*
C	*273.00*
D	*600.00*
E	*495.00*
F	*25.00*
G	*130.00*
W	*300.00*
H	*720.00*
Maximum Slide Stroke ("Z" Axe)	*280.00*
Total Device Weight (Kg)	*298.00*

*** Roundness ≤ 0.003 mm.*
**** All dimensions are given in millimeters.*

VRB SERIES

VERTICAL SERVO SLIDES

VRB150-200/400

Vertical Servo Slides

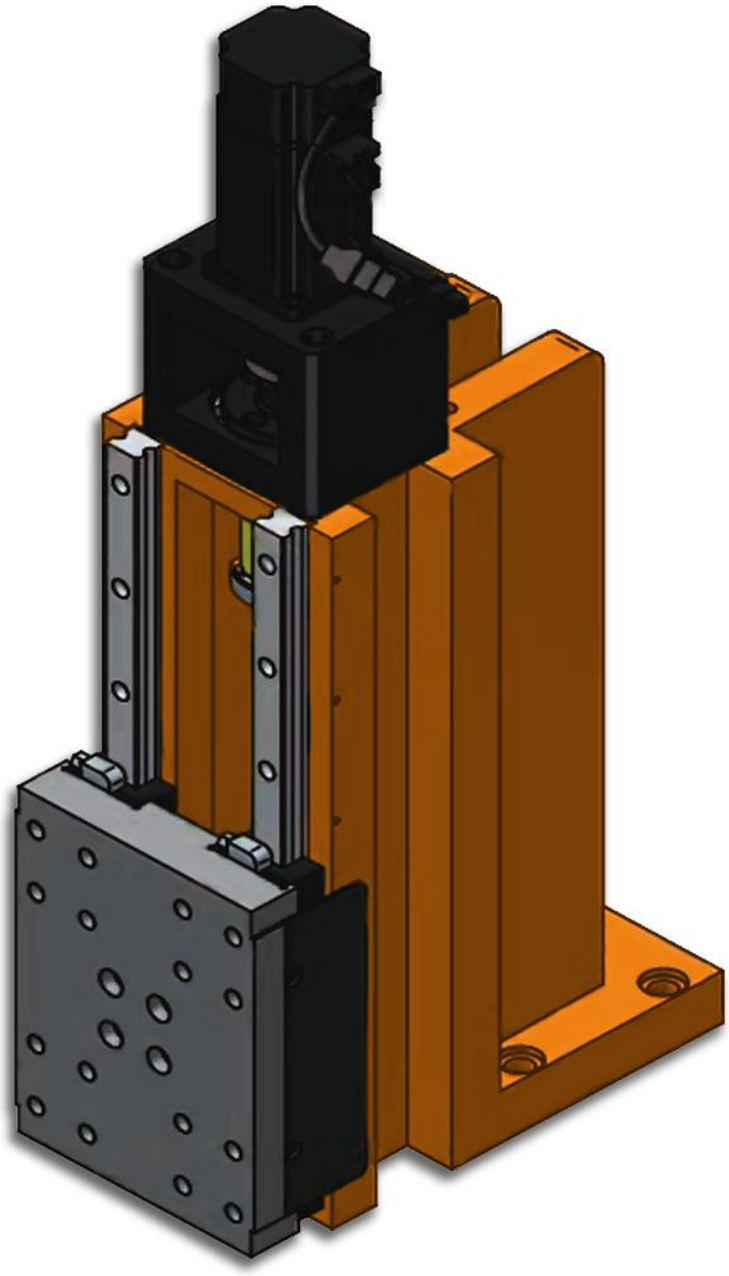

Characteristics & Dimensions

MODEL	VRB150-200/400
Device Height	*150.00*
Device Width	*400.00*
Maximum Platform Stroke	*180.00*
Ballscrew Type	*Ø16 x 5 x C7*

*** A C3 or C5 grade packed screw can be requested upon customer request.*
**** Roundness ≤ 0.003mm.*
***** All dimensions are indicated in millimeters.*

VRB150-200/400

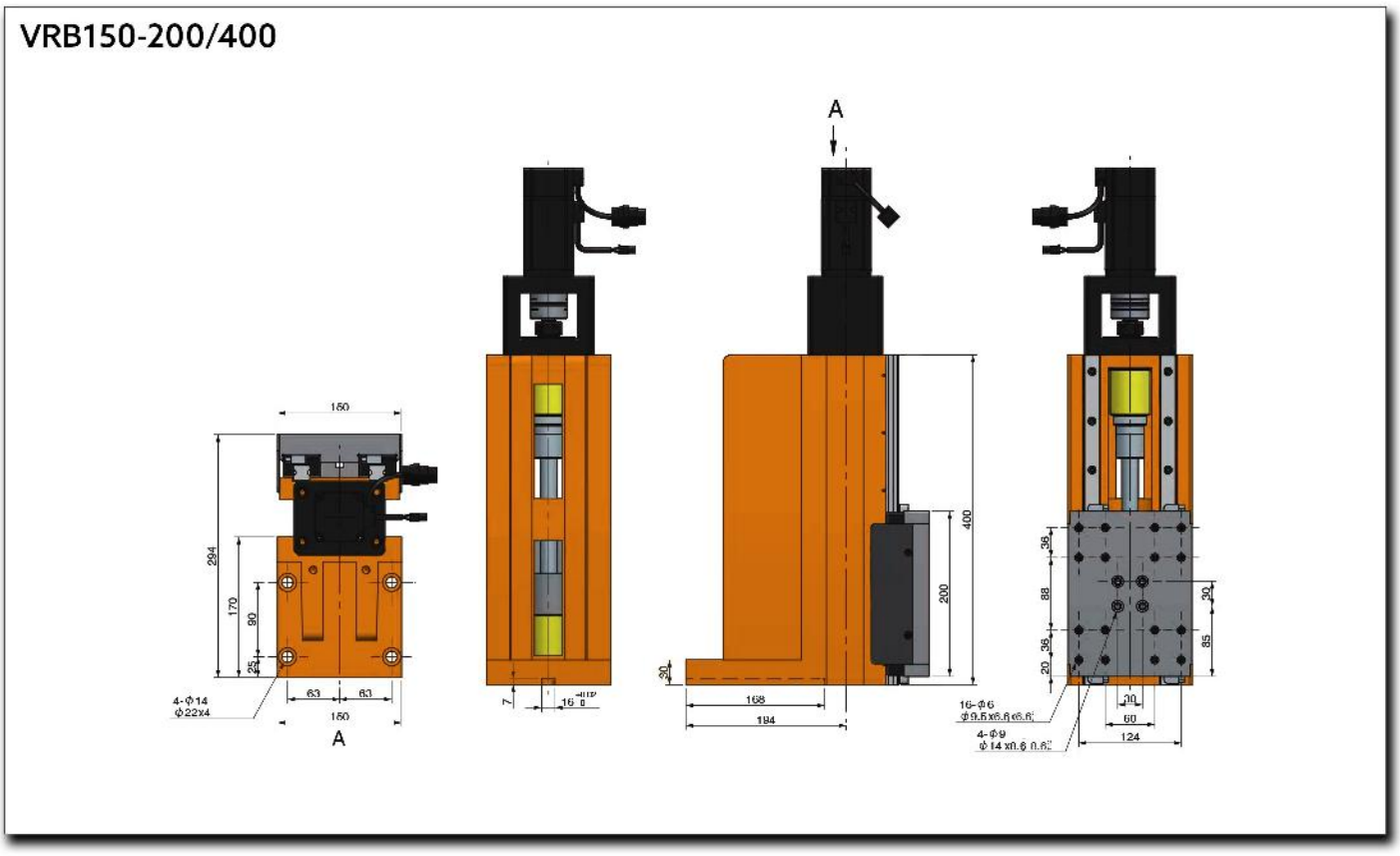

VSS SERIES

VERTICAL SERVO SLIDES

VSS150-200/400

Vertical Servo Slide

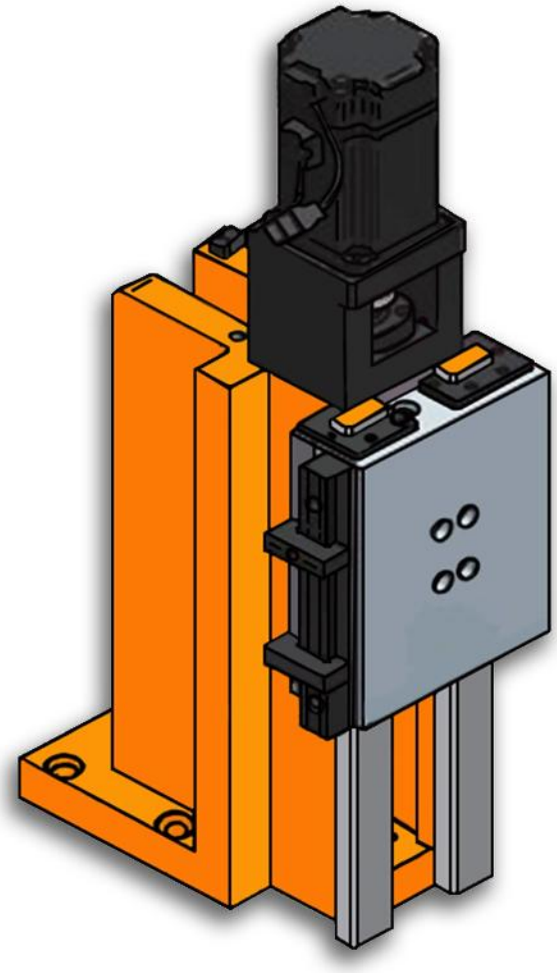

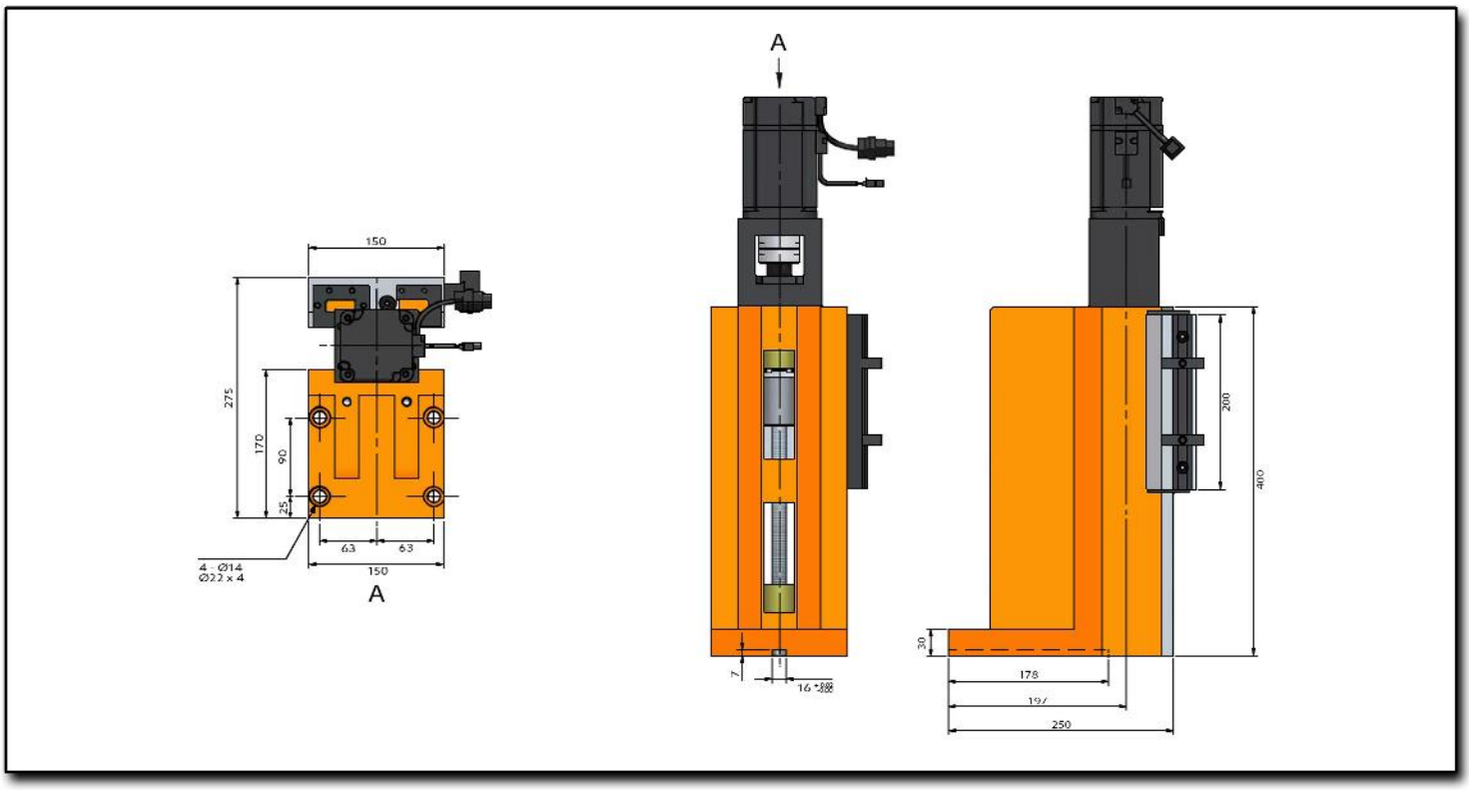
A
150
275
170
90
25
63
63
150
4 - Ø14
Ø22 x 4
A
7
16
30
178
197
250
200
400

Characteristics & Dimensions

MODEL	VSS150-200/400
A	*250*
B	*197*
C	*178.00*
D	*200.00*
E	*400.00*
F	*25.00*
G	*63.00*
J	*275.00*
W	*150.00*
H	*400.00*
Ball Screw	*Ø16.00 x 5.00 x C7*
Maximum Vertical Slide Stroke	*180.00*
Total Device Weight (Kg)	*92.00*

*** Ball Screw Grade **C3** & **C5** can be used upon customers request.*
**** Roundness **≤0.003 mm.***
***** All dimensions are given in millimeters.*

VSS220-300/420

Vertical Servo Slide

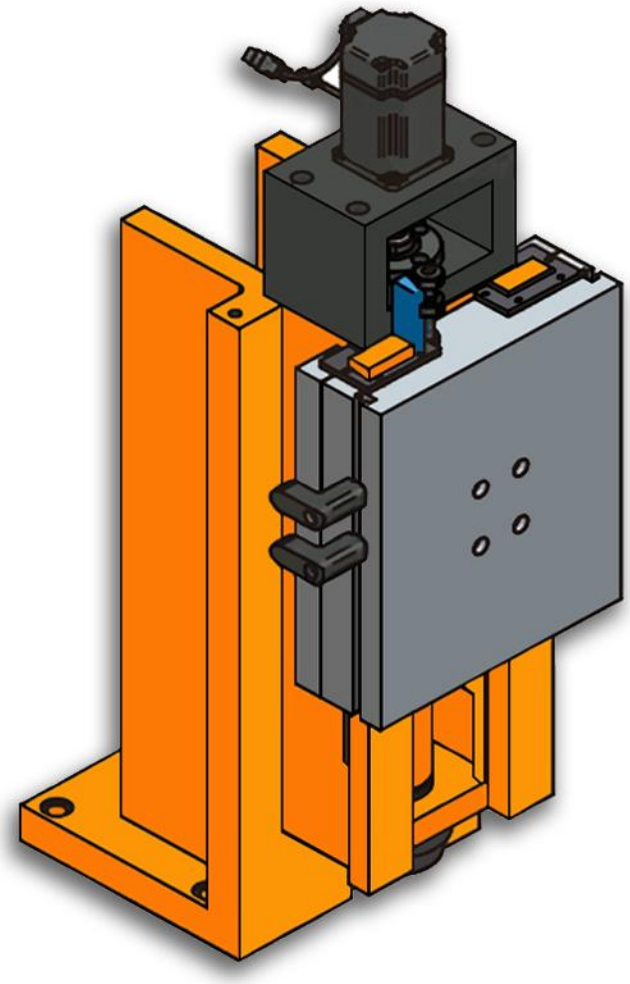

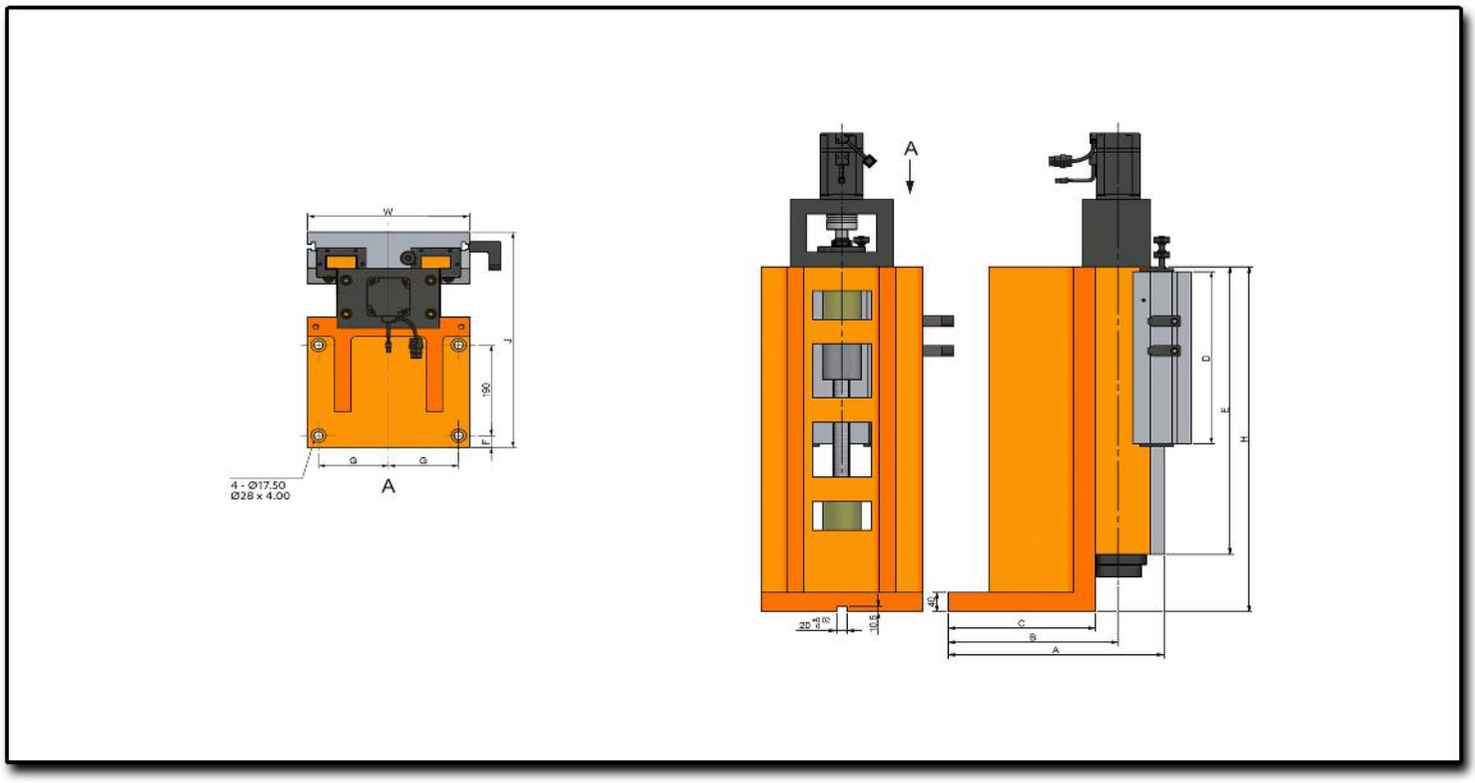
W
J
190
F
G
G
A
4 - Ø17.50
Ø28 x 4.00
A
D
E
H
40
C
B
A
20
10.5

Characteristics & Dimensions

MODEL	VSS220-300/420
A	*360*
B	*297*
C	*278.00*
D	*300.00*
E	*420.00*
F	*30.00*
G	*95.00*
J	*390.00*
W	*220.00*
H	*420.00*
Ball Screw	*Ø25 x 5*
Maximum Vertical Slide Stroke	*100.00*
Total Device Weight (Kg)	*120.00*

***** All dimensions are given in millimeters.*

VSS220-300/670

Vertical Servo Slide

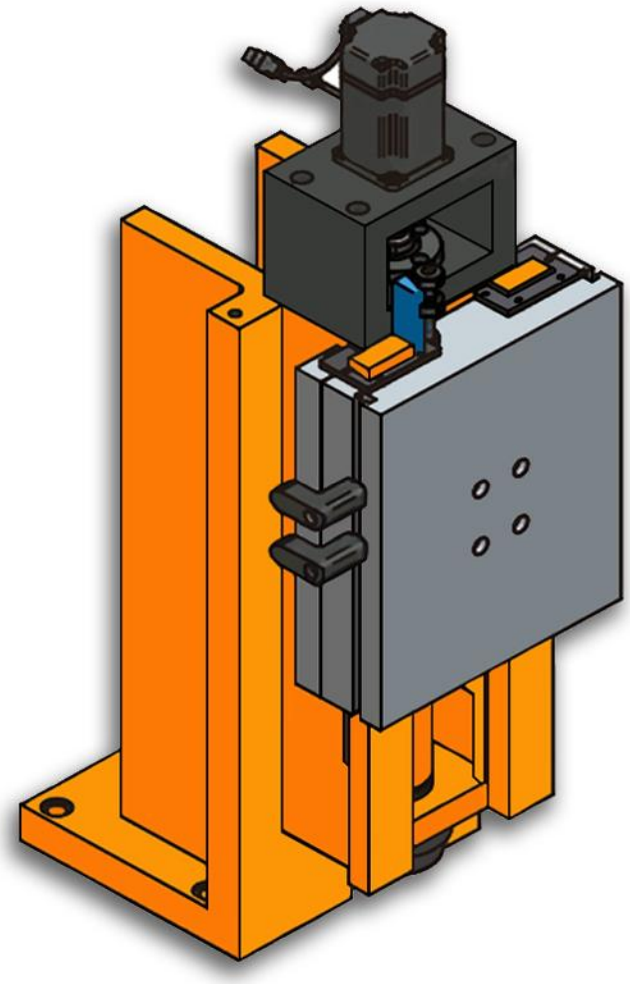

Características & Dimensiones

Modelo	VSS220-300/670
A	*360.00*
B	*297.00*
C	*278.00*
D	*300.00*
E	*520.00*
F	*30.00*
G	*95.00*
J	*390.00*
W	*220.00*
H	*670.00*
Tornillo Embalado	*Ø25 x 5*
Carrera Máxima De La Corredera	*200.00*
Peso Total Del Dispositivo *(Kg)*	*152.00*

**** Redondez ≤ 0.003 mm.*
***** Todas las dimensiones están indicadas en milímetros.*

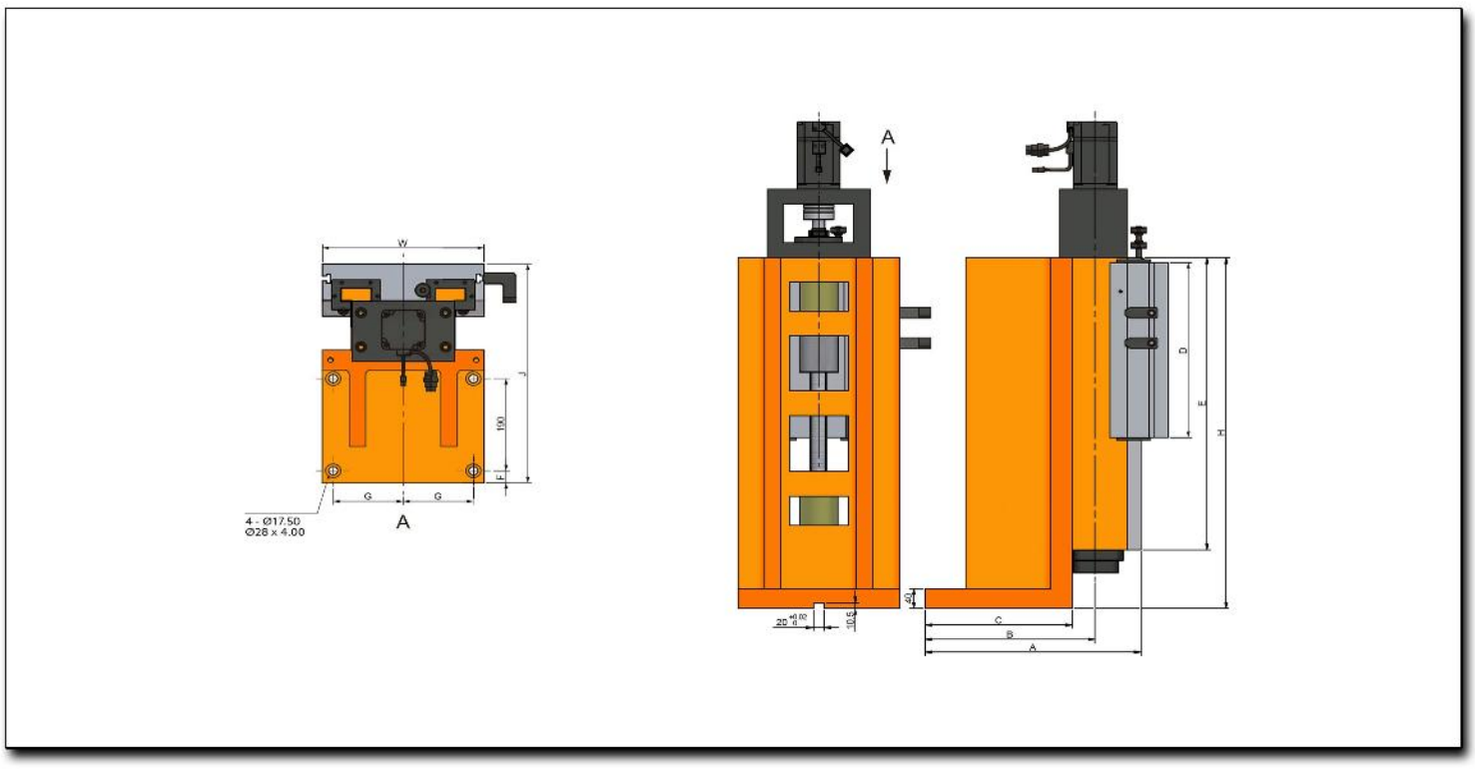
W
J
100
F
G
G
4 - Ø17.50
Ø28 x 4.00
A
A
D
E
H
C
B
A

VSS300-360/540

Vertical Servo Slide

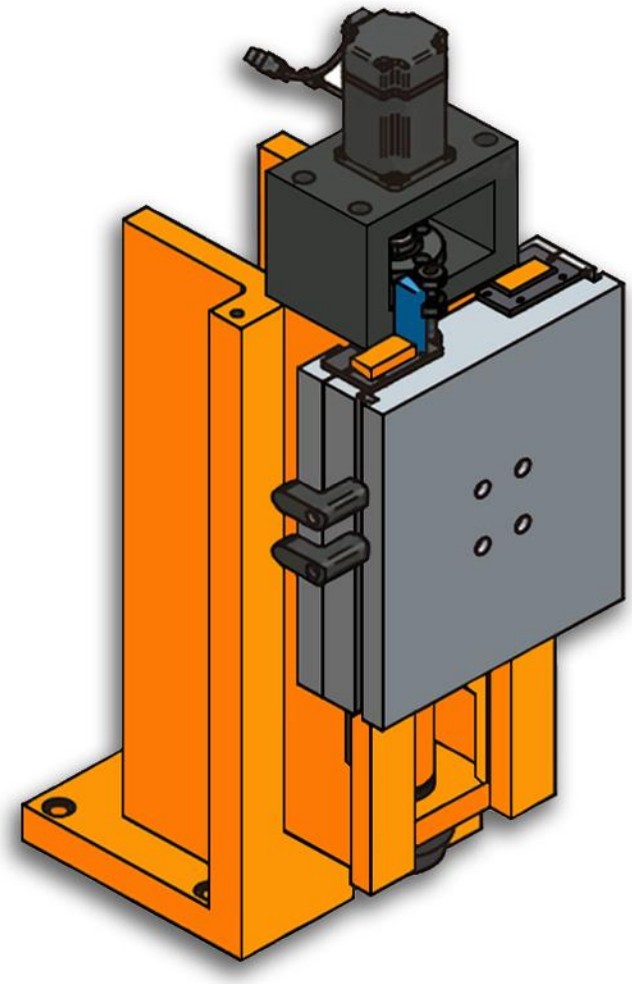

Characteristics & Dimensions

MODEL	VSS300-360/540
A	*400*
B	*315*
C	*273.00*
D	*360.00*
E	*500.00*
F	*25.00*
G	*130.00*
J	*450.00*
W	*300.00*
H	*540.00*
Ball Screw	*Ø32 x 5*
Maximum Vertical Slide Stroke	*120.00*
Total Device Weight (Kg)	*197.00*

***** All dimensions are given in millimeters.*

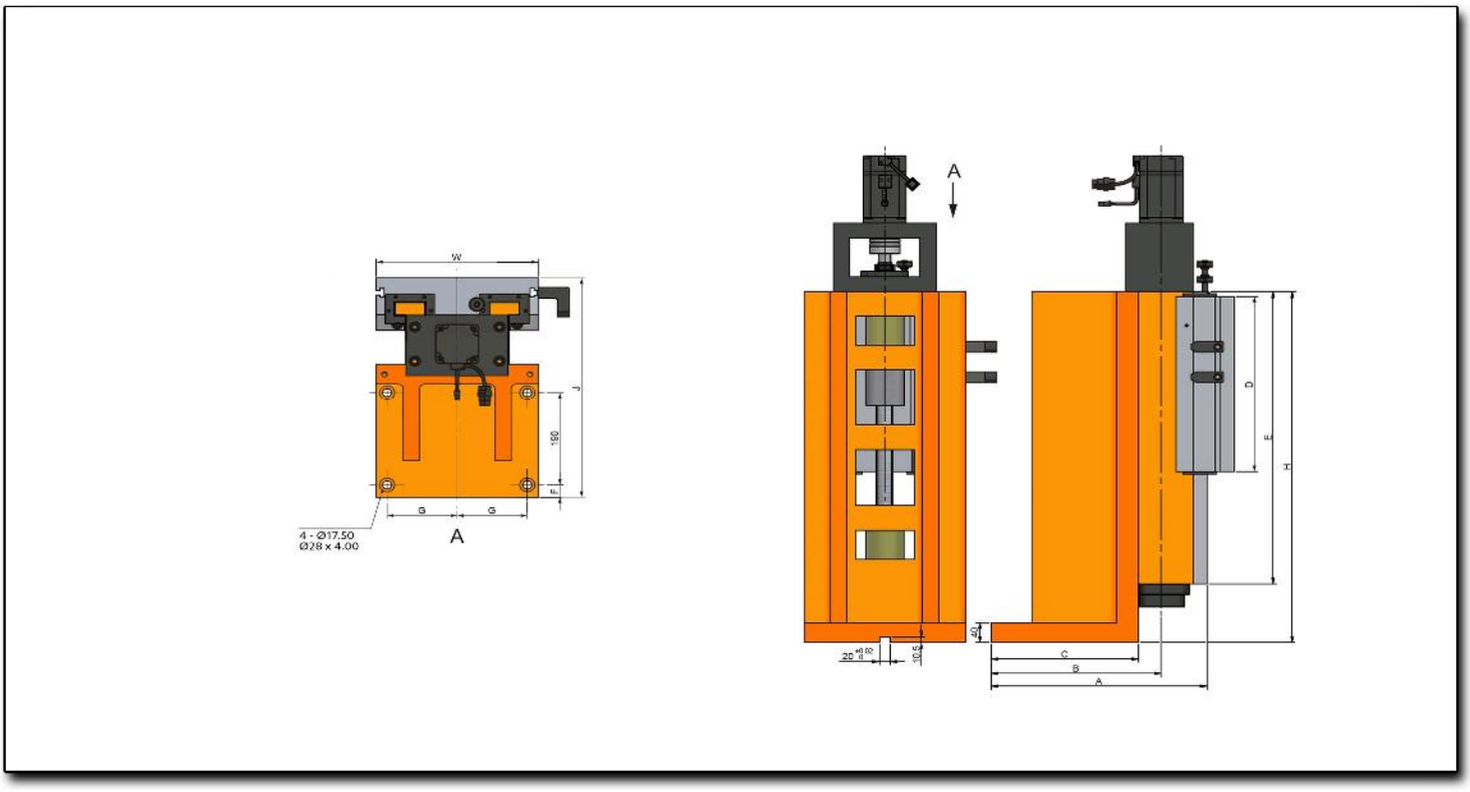
W
J
100
F
G
G
4 - Ø17.50
Ø28 x 4.00
A
A
D
E
H
C
B
A

VSS300-360/720

Vertical Servo Slide

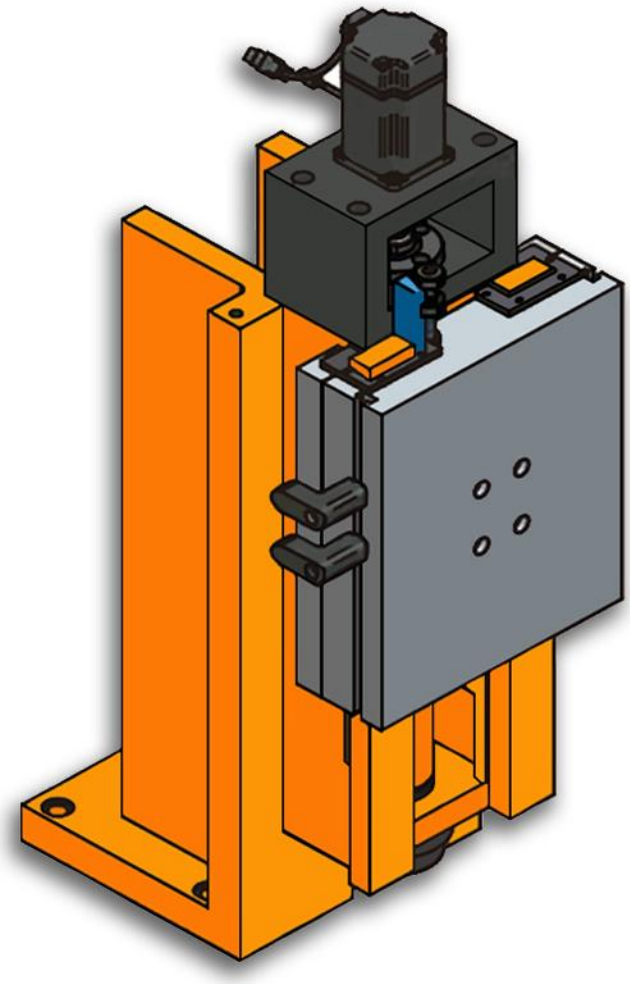

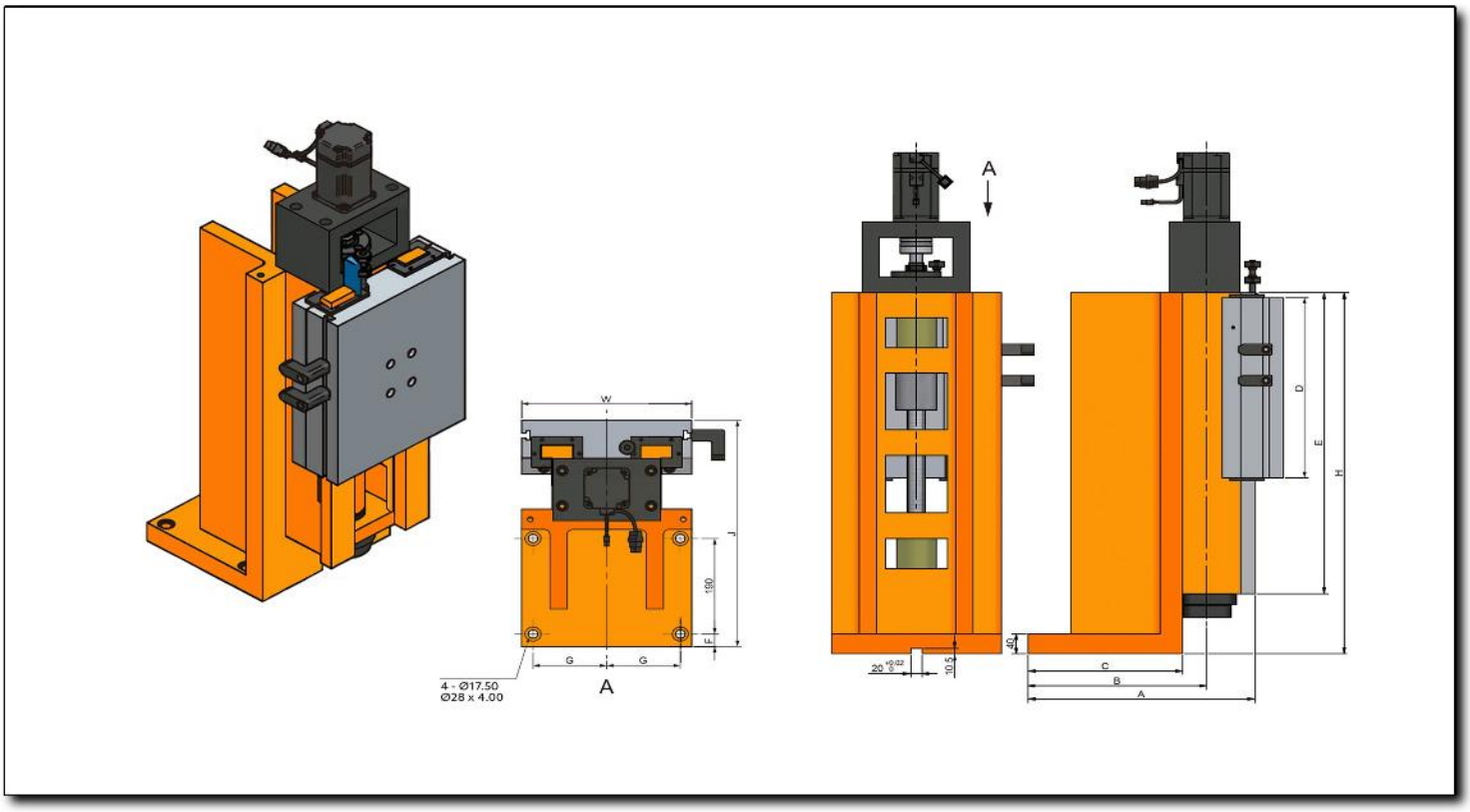
W
J
150
F
G
G
A
4 - Ø17.50
Ø28 x 4.00
A
D
E
H
40
20 +0.02 0
10.5
C
B
A

Characteristics & Dimensions

MODEL	VSS300-360/720
A	*400*
B	*315*
C	*273.00*
D	*360.00*
E	*600.00*
F	*25.00*
G	*130.00*
J	*450.00*
W	*300.00*
H	*720.00*
Ball Screw	*Ø32 x 5*
Maximum Vertical Slide Stroke	*220.00*
Total Device Weight (Kg)	*243.00*

***** All dimensions are given in millimeters.*

VSS360-360/920

Vertical Servo Slide

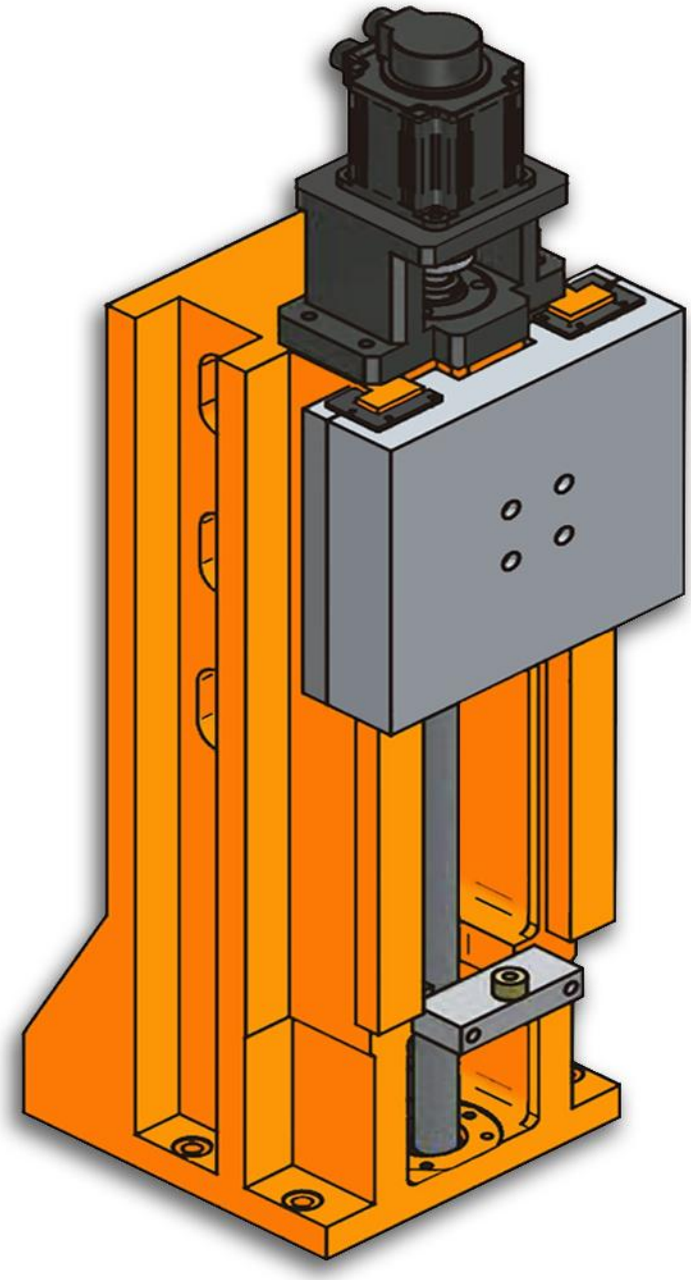

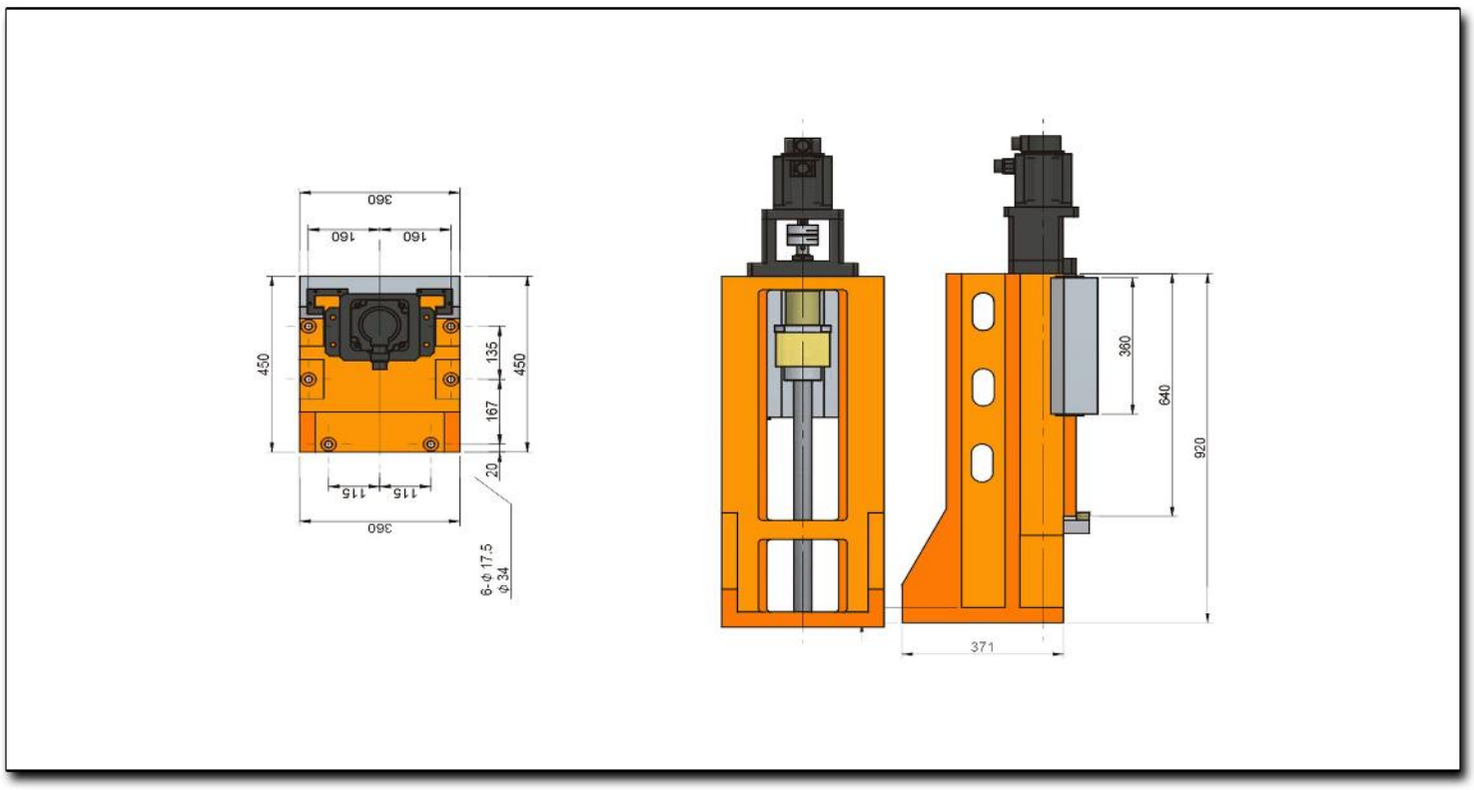
360
160
160
450
135
450
167
20
115
115
360
6-ϕ 17.5
ϕ 34
360
640
920
371

Characteristics & Dimensions

MODEL	VSS360-360/920
A	-
B	-
C	*372.00*
D	*360.00*
E	*640.00*
F	*20.00*
G	*115.00*
J	*450.00*
W	*360.00*
H	*920.00*
Ball Screw	*Ø40 x 5*
Maximum Vertical Slide Stroke	*260.00*
Total Device Weight (Kg)	*292.00*

***** All dimensions are given in millimeters.*

4Man

Elements For Manufa

MEXICO BRANCH OFFICE
Roberto Diaz No. 401
Ciudad Industrial
Aguascalientes, Ags.
México
20290

4ManPro@4ManPro.com
(449) 171 3420
www.4ManPro.com/SPA/

USA BRANCH OFFICE
4ManPro®
708 Main St.
10th Floor
Houston, Tx, USA
77002

4ManPro-USA@4ManPro.com
+1 (832) 871 5022
www.4ManPro.com/ENG/

Elements For Manufacturing Processes