4ManPro

Elements For Manufacturing Processes

HI HYDROME

CATÁLOGO GENERAL

4ManPro
Elements For Manufacturing Processes

HI HYDROME

ACCESORIOS
(ACCESSORIES)

GAUGE COCK, GAUGE DAMPER, STOP VALVE

Gauge Cock

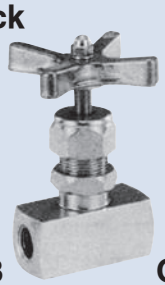

GCT-02~03

GCLT-02~03

Gauge Damper

SB-02~04

Stop Valve

ST-02~08

K

How to order

GCT, SB, ST - 02

1 2

1	Model	GCT, SB, ST: 180°	GCLT: 90°			
2	Port size	02: 1/4"	03: 3/8"	04: 1/2"	06: 3/4"	08: 1"

Specifications

Model	Type	Port Size (PT)	Max. Pressure (bar)	Flow (lpm)	Weight (kg)
GCT-02	180 °	1/4"	250	3	0.35
GCT-03		3/8"		21	0.39
GCLT-02	90 °	1/4"		3	0.34
GCLT-03		3/8"		21	0.38
SB-02	180 °	1/4"	100	0.5	0.1
SB-03		3/8"		0.7	0.12
SB-04		1/2"		1.5	0.19

Model	Port Size (pt)	Max. Pressure (bar)	Flow (lpm)	Orifice (inch)	Weight (kg)
ST-02	1/4"	350	20	3/16	0.33
ST-03	3/8"		40	9/32	0.43
ST-04	1/2"		80	11/32	0.65
ST-06	3/4"		120	7/16	1.46
ST-08	1"		300	9/16	2.50

Dimensions

Unit: mm

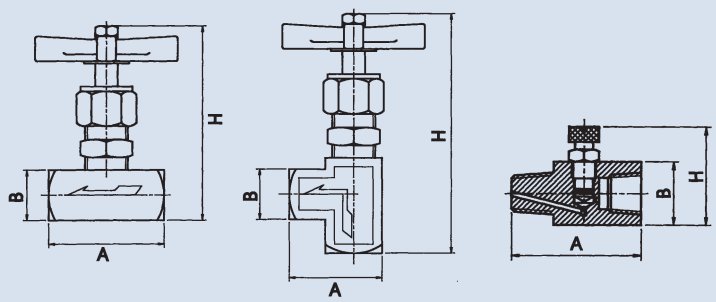

Model	A	B	H
GCT-02	52.5	26	95.5
GCT-03	52.5	26	95.5
GCLT-02	44.5	26	109
GCLT-03	44.5	26	109
SB-02	43	21	32
SB-03	45	23	34
SB-04	52	27	38

Unit: inch

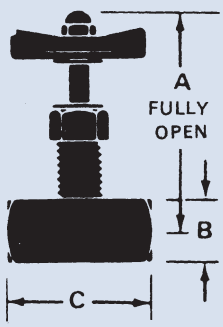

Model	A	B	C
ST-02	3-1/16	7/8	2
ST-03	4-1/32	1	3-2/8
ST-04	3-15/16	1-1/4	2-7/8
ST-06	4-15/16	1-1/2	3-5/8
ST-08	5-5/16	2	4-1/16

FLOW CONTROL VALVE

SUB-PLATE MOUNTING TYPE

FTC-02G

FT-02G

PIPE CONNECTION TYPE

F-02~06, TLC-02~03

F-02N~03N

K

How to order

FTC - 02 G - 21A

1 2 3 4

1	Model FTC: Throttle and check valve FT: Throttle valve only
2	Valve size
3	Mounting type G: Sub-plate mounting
4	Design no.

Specifications

Model	Max. Pressure (bar)	Flow (lpm)	Weight (kg)	Bolt size
FTC-02G	230	10	0.36	M5x25L
FT-02G				

Dimensions

Sub-plate mounting type

Unit: mm

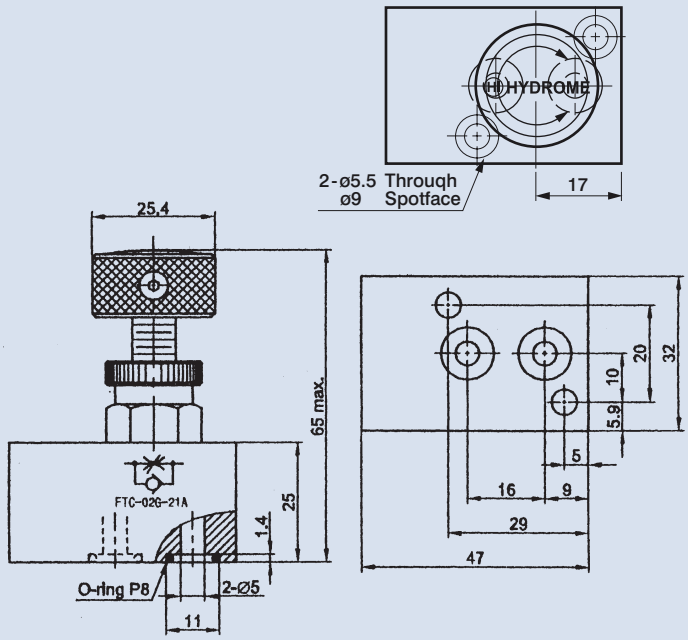

Specifications / Dimensions

Pipe connection type

Unit: mm

F-02~06, TLC-02~03: Throttle and check valve
F-02N~03N: Throttle valve only

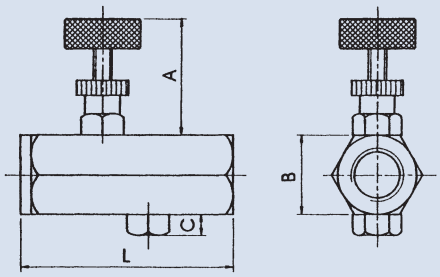

Model	Port size (PT)	A	B	C	L	Flow (lpm)	Material	Max. Pressure (bar)	Weight (kg)
F-02	1/4"	40	23	7	62	12	Steel	280	0.24
F-03	3/8"	38	26	7	70	20	Steel	280	0.30
F-04	1/2"	43	32	10	81	30	Steel	280	0.50
F-06	3/4"	47	41	12	92	48	Steel	280	0.92
F-02N	1/4"	40	23	-	62	12	Steel	280	0.24
F-03N	3/8"	38	26	-	70	20	Steel	280	0.30
TLC-02	1/4"	40	23	7	62	12	Copper	150	0.24
TLC-03	3/8"	38	26	7	70	20	Copper	150	0.30

OIL FILLER BREATHER

K

How to order

AB - 1163 S

1 2 3

1	Model
2	1163: General use 1162: Miniature type
3	Omit: Plastic strainer S: Stainless steel screen

Dimensions

AB-1162(S), AB-1163(S), SY-10, HY-24, CB-16, CB-16B

Unit: mm

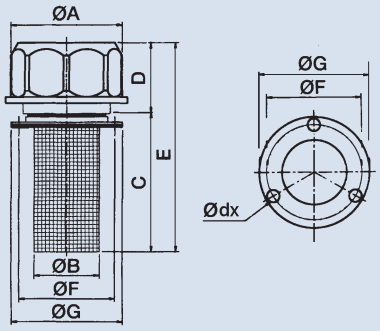

Model	Port	A	B	C	D	E	F	G	d x Hole	Filtration Micron Air	Filtration Micron Oil	Weight (kg)
AB-1162	32	53	31	65	34	99	46.5	53	ø6 x 3	40	400	0.09
AB-1162S												
AB-1163	50	80	48	95	50	147	71	82	ø6 x 3			0.26
AB-1163S												
SY-10	50	80	49	150	52	187	78	88	ø6 x 4		500	0.3
HY-24	88	137	85	213	56	269	120	141	ø8 x 4			1.34
CB-16	53	85	46	120	38	158	Welding type	-			400	0.61
CB-16B								For tank side using				0.60

AIR FILTER

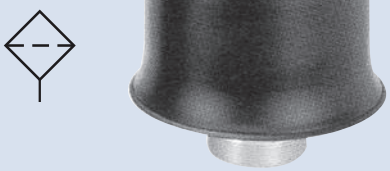

AB-02~32

AB-02A~04A

AB-04B~08B

K

How to order

AB - 02

1 2

1	Model	
2	Port size	Thread connection

Dimensions

AB-02~32

Unit: mm

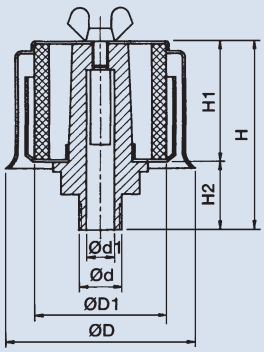

Model	Port Size d (PT)	d1	D	D1	H1	H2	H	Filtration Micron	Weight (kg)
AB-02	1/4"	8	52	41	36	22	58	40	0.2
AB-03	3/8"								0.2
AB-04	1/2"	19	67	51	41	27	68		0.3
AB-06	3/4"								0.3
AB-08	1"	25	100	65	45	26	74		0.4
AB-12	1-1/2"	48	130	92	90	37	130		0.65
AB-16	2"								0.65
AB-20	2-1/2"	61	187	150	115	59	174		1.5
AB-24	3"								1.5
AB-32	4"	113	210	165	140	50	193		2.3

AB02A~04A
AB04B~08B

Unit: mm

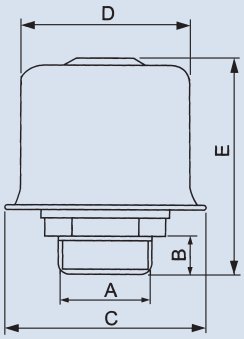

Model	Port Size A (PT)	B	C	D	E	Weight (kg)
AB-02A	1/4"	16	57.5	52	56	0.08
AB-03A	3/8"	16	57.5	52	56	0.08
AB-04A	1/2"	18	57.5	52	63	0.1
AB-04B	1/2"	18	86	79.5	75.5	0.18
AB-06B	3/4"	21	86	79.5	76.5	0.21
AB-08B	1"	23	86	79.5	82.5	0.28

MAGNET FLANGE FOR TANK, TANK END COVER

K

Dimensions

Magnet Flange

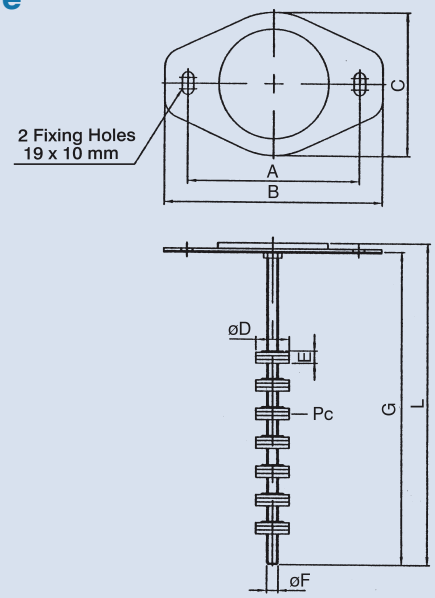

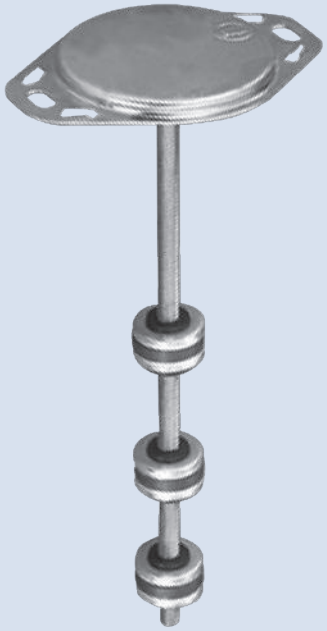

Model	Dimensions (mm)								Qt'y of Magnet (PC)
	A	B	C	øD	E	øF	G	L	
FJ-200-2P	120	142	102	32	26	8	200	209	2
FJ-300-3P	120	142	102	32	26	8	300	309	3
FJ-400-5P	120	142	102	32	26	8	400	409	5
FJ-500-6P	120	142	102	32	26	8	500	509	6
FJ-600-7P	120	142	102	32	26	8	600	609	7
FJ-700-8P	120	142	102	32	26	8	700	709	8
FJ-800-10P	120	142	102	32	26	8	800	809	10
FJ-1000-13P	120	142	102	32	26	8	1000	1009	13

Tank End Cover

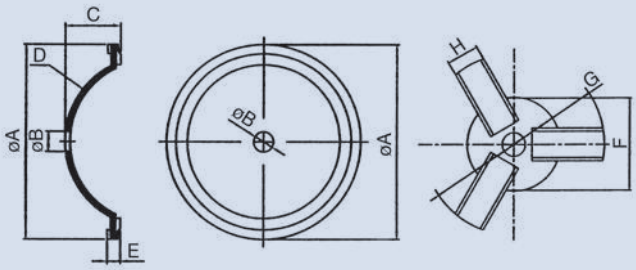

Model	Dimensions (mm)								Tank Cutting DIA. (mm)	Weight (kg)
	øA	B	C	D	E	øF	G	H		
THY-08	210	16	40	4.5	17	115	182	26.5	160	2.88
THY-10	260	16	41	4.5	17	115	248	26.5	210	3.70
THY-12	310	16	47	4.5	17	140	316	26.5	250	5.12
THY-14	367	16	47	4.5	17	140	368	26.5	300	6.28
THY-18	465	16	68	4.5	17	140	452	26.5	400	9.12

SUCTION STRAINER

SFW

SFN

MF

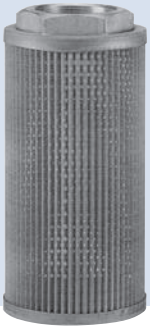

MFN

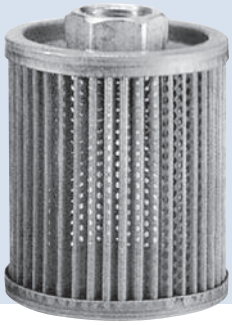

Specifications / Dimensions

Unit: mm

SFW

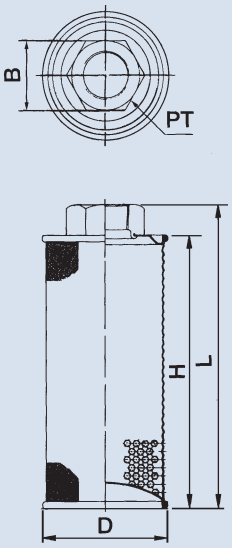

SFN

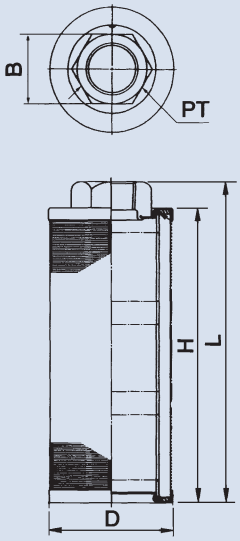

MF

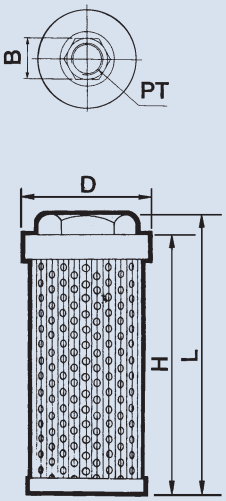

MFN

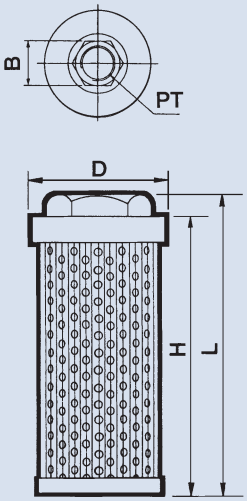

Model	Port (PT)	Flow (lpm)	D	L	H	B	Filtration Mesh	Weight (kg)
SFW-02	1/4	14	55	109	100	22	120	0.13
SFW-03	3/8	17	55	109	100	22		0.13
SFW-04S	1/2	20	55	113	100	30		0.14
SFW-04	1/2	30	55	145	132	30		0.16
SFW-06	3/4	50	65	163	145	34		0.19
SFW-08	1	100	87	208	188	42		0.35
SFW-10	1-1/4	180	106	230	208	54		0.50
SFW-12	1-1/2	246	126	247	228	65		0.70
SFW-16	2	384	126	330	300	75		0.82
SFW-20	2-1/2	700	157	414	390	97		1.36
SFW-24	3	800	157	458	435	110		1.47
SFW-32	4	1000	208	380	357	142		2.45
SFN-04	1/2	35	64	160	153	30	150	0.27
SFN-06	3/4	46	64	166	153	34		0.28
SFN-08	1	90	85	210	198	42		0.48
SFN-10	1-1/4	150	103	231	215	54		0.77
SFN-12	1-1/2	205	120	246	232	65		0.96
SFN-16	2	320	120	332	317	75		1.27
SFN-20	2-1/2	550	148	434	419	97		2.00
SFN-24	3	600	148	434	419	110		2.68

Model	Port (PT)	Flow (lpm)	D	L	H	B	Filtration Micron	Weight (kg)
MF-03	3/8	24	58	96	90	22	100	0.10
MF-04	1/2	32	58	100	90	29		0.14
MF-06	3/4	56	58	137	124	34		0.18
MF-08	1	110	58	170	155	42		0.2
MF-10	1-1/4	210	71	186	170	54		0.35
MF-12	1-1/2	285	85	196	182	61		0.49
MF-16	2	395	103	215	202	72		0.65
MF-20	2-1/2	750	148	274	252	97		1.20
MF-24	3	800	148	274	252	110		1.21
MF-32	4	1000	208	380	357	142		2.45
MFN-02	1/4	25	64	90	85	22	100	0.11
MFN-03	3/8	30	64	90	85	22		0.11
MFN-04	1/2	50	64	115	103	30		0.15
MFN-06	3/4	90	64	145	131	34		0.18
MFN-08	1	160	85	175	162	42		0.35
MFN-10	1-1/4	280	103	200	187	54		0.50
MFN-12	1-1/2	420	120	205	190	65		0.80
MFN-16	2	550	120	225	208	75		1.00
MFN-20	2-1/2	850	148	309	292	97		1.30
MFN-24	3	1000	148	309	292	110		1.45
MFN-32	4	1200	208	380	357	142		2.45

PRESSURE LINE FILTER

FEATURES:

- The body's material is aluminum alloy code A356.
- The O-Ring is NBR for temperature Max. 100 °C.
- The indicator is a difference pressure switch with pressure more than 2.5 bar.
- The resistance of filter element should be lower than 5.5 bar to keep it life long, its life is normally 300~400 working hours.

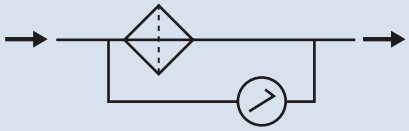

K

How to order

TF - 06 - ※ - ※

1 2 3 4

1	Model Material: Aluminum alloy A356	**2**	Port size 06: PT 3/4" 08: PT 1"
3	Filter element	**4**	Indicator

Code	Element	Code	Element
A3	Fiber 3μ B≧200	M60	60 mesh/cm
A10	Fiber 10μ B≧200	M100	100 mesh/cm
A25	Fiber 25μ B≧200	M150	150 mesh/cm

Code	Indicator
N	Plug
V	Visual
E	Visual-electrical

Specifications / Dimensions

Model	Port Size (PT)	Max. Pressure (bar)	Element Code	Flow (lpm)	Weight (kg)
TF-06	3/4"	100	A3	30	1.7
			A10	45	
			A25	60	
			M60	180	
			M100	160	
			M150	140	
TF-08	1"		A3	35	
			A10	50	
			A25	70	
			M60	200	
			M100	180	
			M150	150	

Unit: mm

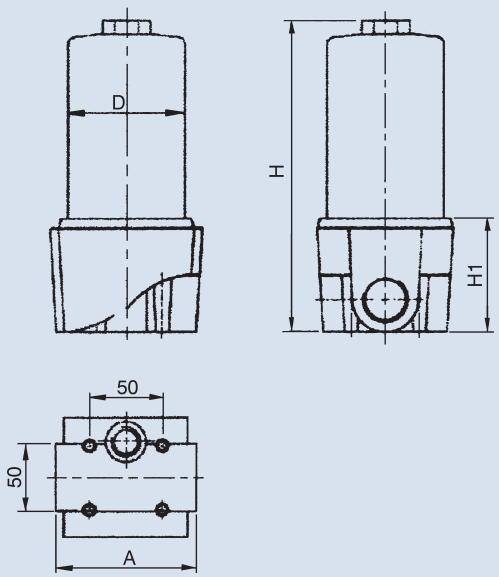

A	D	H	H1
100	85	236	86
100	85	236	86

PRESSURE LINE FILTER

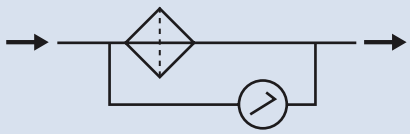

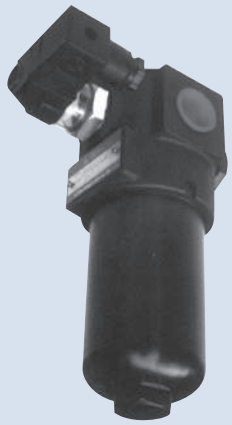

K

How to order

HP-06 - 1 - ※ - ※ - ※ - ※

1 2 3 4 5 6

1 Model Material: Steel

2 H length

HP-06-※	H Length	HP-08-※	H length	HP-10-※	H length
1	175 mm	1	225 mm	1	282 mm
2	198 mm	2	335 mm	2	373 mm
3	298 mm			3	492 mm

3 Element

Code	Element	Code	Element
A3	Fiber 3μ B≧200	A25	Fiber 25μ B≧200
A6	Fiber 6μ B≧200	T40	Metal 40μ
A10	Fiber 10μ B≧200		

4 Indicator

Code	Indicator
N	Plug
V	Visual
E	Visual-electrical

5 Seal

Code	Material
N	Nbr
V	Viton

6 Port thread PT BSP NPT SAE

Specifications

Model	Element Code	Port Size	Max. Pressure (bar)	Flow (lpm)	Weight (kg)
HP-06-1	A03	3/4"	350	20	3.6
	A06			25	
	A10			35	
	A25			50	
	T40			75	
HP-06-2	A03			25	3.9
	A06			35	
	A10			50	
	A25			80	
	T40			90	
HP-06-3	A03			35	5
	A06			60	
	A10			80	
	A25			100	
	T40			120	
HP-08-1	A03	1"		35	6.8
	A06			60	
	A10			80	
	A25			100	
	T40			120	

Model	Element Code	Port Size	Max. Pressure (bar)	Flow (lpm)	Weight (kg)
HP-08-2	A03	1"	350	70	8.3
	A06			90	
	A10			120	
	A25			150	
	T40			200	
HP-10-1	A03	1"		70	15.5
	A06			90	
	A10			120	
	A25			150	
	T40			200	
HP-10-2	A03	1-1/4"		140	21.2
	A06			240	
	A10			290	
	A25			360	
	T40			400	
HP-10-3	A03	1-1/2"		180	25.5
	A06			300	
	A10			360	
	A25			450	
	T40			500	

PRESSURE LINE FILTER, INDICATOR

K

Dimensions

Unit: mm

HP-06

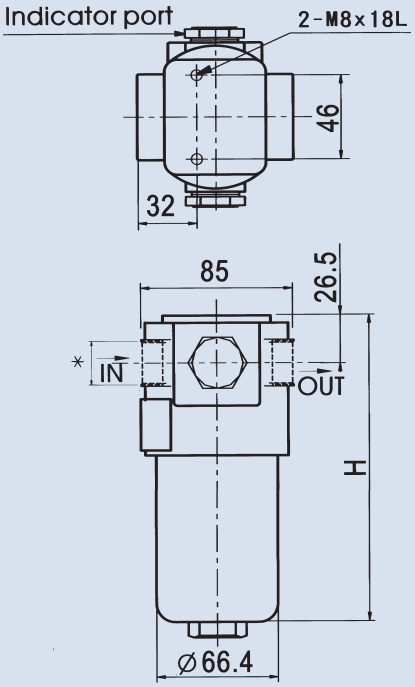

HP-08

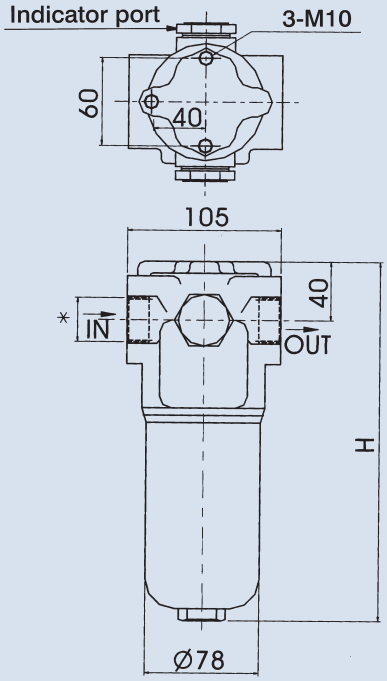

HP-10

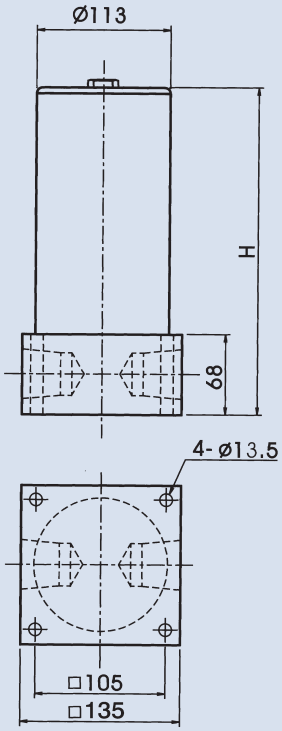

Visual

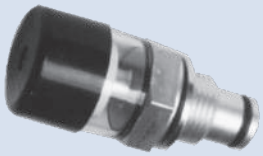

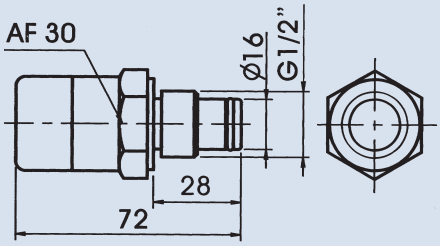

Visual-electrical

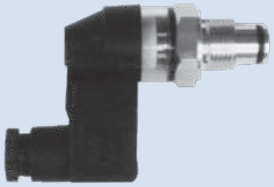

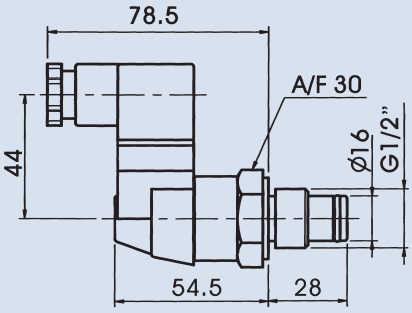

CONNECTOR

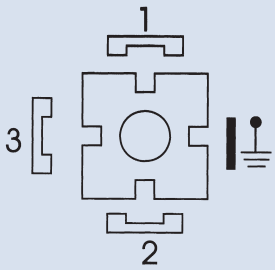

ELECTRICAL CONNECTION

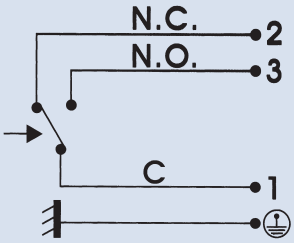

PRESSURE LINE FILTER

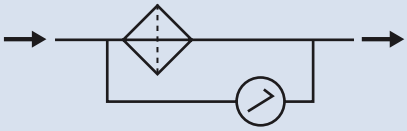

How to order

DHP - 06 - ※ - ※ - ※ - ※

1 2 3 4 5 6

1 Model Material: Aluminum alloy

2 Port size 06: 3/4" 08: 1" 10: 1 1/4"

3 Element

Code	Element
A3	Fiber 3μ B≧200
A6	Fiber 6μ B≧200
A10	Fiber 10μ B≧200
A25	Fiber 25μ B≧200
T40	Metal 40μ

4 Indicator

Code	Indicator
N	Plug
V	Visual
E	Visual-electrical

5 Seal

Code	Material
N	Nbr
V	Viton

6 Port thread BSP NPT SAE

Specifications / Dimensions

Model	Element Code	Port Size	Max. Pressure (bar)	Flow (lpm)	Weight (kg)
DHP-06	A03	3/4"	250	20	1.6
	A06			25	
	A10			35	
	A25			50	
	T40			75	
DHP-08	A03	1"	120	70	2.5
	A06			120	
	A10			150	
	A25			180	
	T40			200	
DHP-10	A03	1 1/4"		140	5.2
	A06			240	
	A10			290	
	A25			360	
	T40			400	

Unit: mm

DHP-06

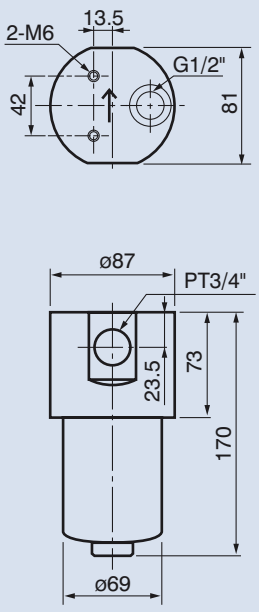

DHP-08, 10

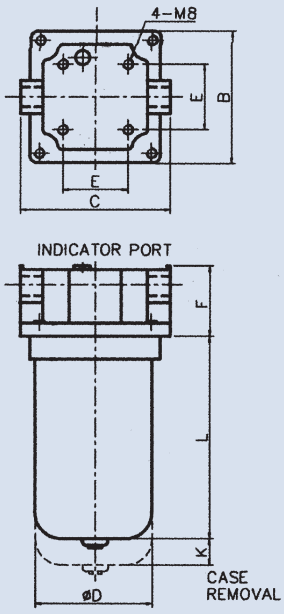

Port size	B	C	øD	E	F	K	L
08	100	115	90	50	54	20	155
10	134	140	115	68	67	25	236

PIPING TYPE RETURN, SUCTION FILTER

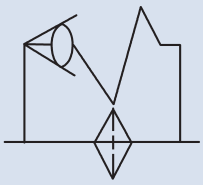

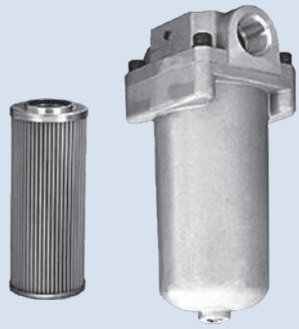

K

How to order

PRI - 10 - ※ - ※ - ※

1 2 3 4 5

1	Model
2	Port size (PT) 06: 3/4" 06L: 3/4" (long size) 08: 1" 08L: 1" (long size) 10: 1-1/4" 12: 1-1/2" 16: 2"
3	Flow type N: Suction line Y: Return line
4	Filter element
5	Indicator None: Plug With inIdicator (see page 262)

Wire Mesh (mesh/cm)		Fiber Micron (μ) for return line
M100	M300	FC3
M120	M400	FC10
M150	M600	
M200	M800	
M250	-	FC25

For Suction Line	
Code	Description
1	Vacuum gauge 2" V-AD
2	Vacuum switch PS 82

For Return Line	
Code	Description
3	Presssure gauge TT-12
4	Pressure switch PS 41
5	Difference pressure switch

Specifications

Model	Port Size (PT) øA	Max. Pressure (bar)	Flow (lpm)	Dimensions (mm)							Weight (kg)
				B	C	øD	E	F	K	L	
PRI-06	3/4	70	110	114	131	100	45 x 80	48	25	166	2.8
PRI-06L			160	114	131	100	45 x 80	48	25	226	3.3
PRI-08	1		120	114	131	100	45 x 80	48	25	166	2.8
PRI-08L			180	114	131	100	45 x 80	48	25	226	3.3
PRI-10	1- 1/4		320	134	140	112	68	67	25	236	4.5
PRI-12	1 -1/2		350	134	140	112	68	67	25	236	4.5
PRI-16	2		500	140	170	135	80	90	40	290	6.6

Dimensions

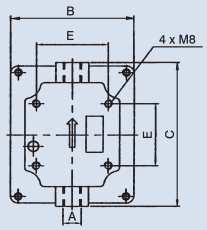

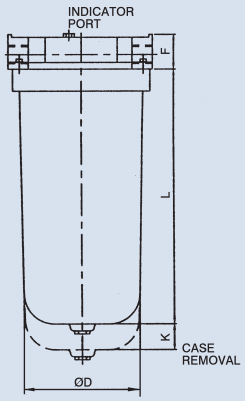

SPIN-ON RETURN FILTER

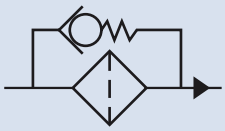

CF-06, 08 ,10

CFG-06

K

How to order

CF - 06 - ※ - ※

1 2 3 4

1	Model CF: Pipe connection CFG: Mounted on tank
2	Port size 06: 3/4" 08: 1" 10: 1-1/4" 12: 1-1/2"
3	Filtration None: 10μ (general use)
4	Indicator (see page 262) None: With pressure gauge TT-12 (normal) O: Without pressure gauge TT-12

Specifications

Model	Port size (PT)	Max. Pressure (bar)	Flow (lpm)	Filtration (μ)	Weight (kg)
CF-06	3/4"	12	60 (10μ)	10: 10μ 25: 25μ	0.62
CF-08	1"		80 (10μ)		0.62
CF-10	1-1/4"		144 (10μ), 160 (25μ)		1.84
CF-12	1-1/2"		344 (10μ)		5.20
CFG-06	3/4"		60 (10μ)		0.87

Dimensions

Unit: mm

CF-06, 08, 10

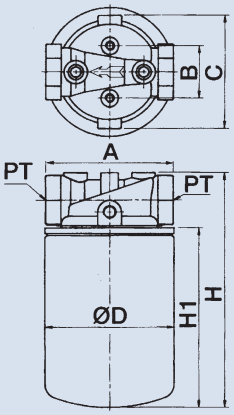

CFG-06

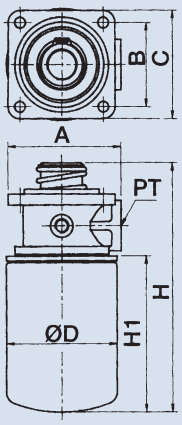

CF-12

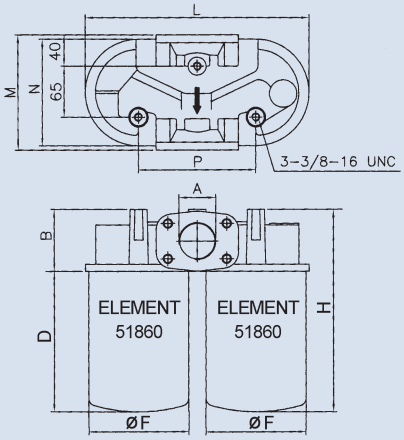

Model	A	B	C	D	H1	H	Mounted
CF-06	92	38	82	93	127	170	Piping
CF-08	92	38	82	93	127	170	
CF-10	137	48	136	128	167	236	
CFG-06	97	70	90	93	127	207	Tank

Model	A	B	D	F	H	L	M	N	P	Mounted
CF-12	PT 1-1/2"	77	230	127	307	284	165	146	171	Piping

SUCTION OR RETURN LINE FILTER

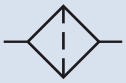

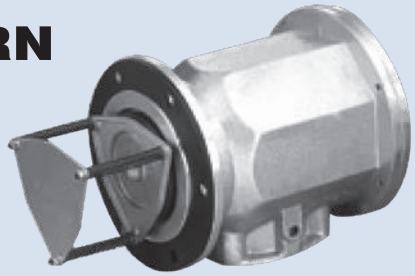

For side of tank

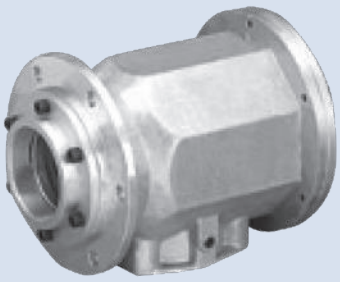

For up-side of tank

K

How to order

FSS - 10 - ※ - ※

1 2 3 4

1	Model	**2**	Port size
3	None: For suction line B: For return line	**4**	Filter media

Wire Mesh (mesh/cm) for suction line			Fiber Micron (μ) for return line
M100	M200	M800	FC3
M120	M400	-	FC10
M150	M600	-	FC25

Specifications

Model	Port Size	Flow (lpm)		Dimensions (mm)													Fix. Bolt	Weight (kg)
		Suction	Return	A	B	C	D	E	F	G	H	I	J	K	L	M		
FSS-10-(B)	1-1/4"	250	160	166	112	120	110	215	335	45	10	130	43	78	13	87	M8 x 25 x 6pcs	6.5
FSS-12-(B)	1-1/2"	300	210															6.4
FSS-1602-(B)	2"	320	250															6.3
FSS-16-(B)	2"	400	300	220	150	120	120	235	355	45	13	180	62	106	18	112	M10 x 35 x 6pcs	10.6
FSS-20-(B)	2-1/2"	550	400															10.2
FSS-24-(B)	3"	700	520															9.6
FSS-28-(B)	3-1/2"	760	570	242	180	120	120	262	382	45	15	210	78	130	18	125	M12 x 35 x 6pcs	13.8
FSS-32-(B)	4"	820	630															13

Dimensions

FSS-※

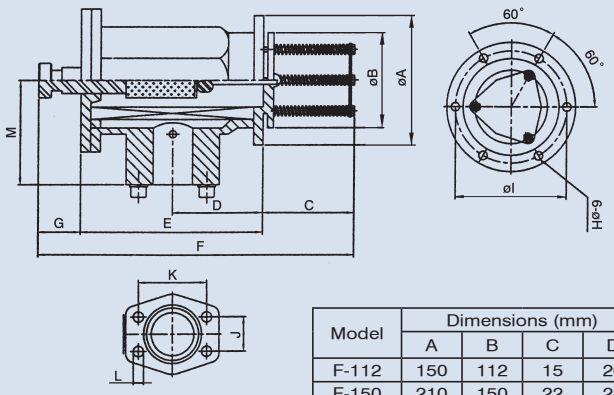

F-112-180 Unit: mm

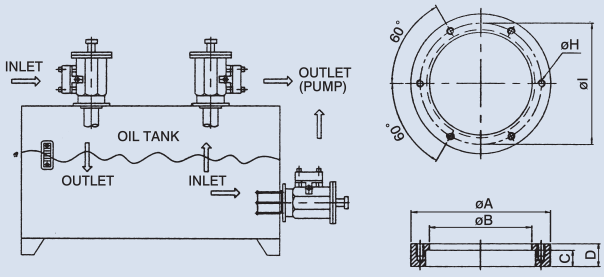

Model	Dimensions (mm)				H Screw thd.	I Type of Fixing P.C.D.	Used For	Weight (kg)
	A	B	C	D				
F-112	150	112	15	20	M8	6 Hole x ø130	FSS10 (B)-1602 (B)	1.1
F-150	210	150	22	28	M10	6 Hole x ø180	FSS16 (B)-24 (B)	3.48
F-180	242	180	22	28	M12	6 Hole x ø210	FSS28 (B)-32 (B)	4.22

SUCTION OR RETURN LINE FILTER

2" V-AD

TT-12

PS-41

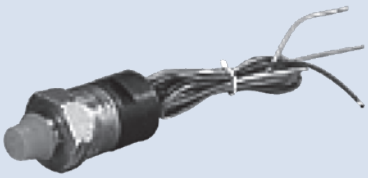

PS-82

Specifications

Model	Description	Prot Size A	Dimensions (mm) B	C	D	I	Used For Filter		Weight (kg)
2" V-AD	Vacuum Gauge	PT 1/4	53	28	44	-	Suction line	PRI FSS	0.1
PS82	Vacuum Switch	PT 1/4	14	28	38	52			0.08
TT-12	Pressure Gauge	PT 1/8	42	23	38	-	Return line	PRI-※-Y FSS-※-B CF	0.06
PS41	Pressure Switch	PT 1/8	13	31	48	88			0.1
TK-K2	Difference Presure Switch-visual type	M18 x 1.5	-					PRI-※-Y	0.08
TK-5E		M20 x 1.5						-	
TK-Y2	Difference pressure switch-visual with electrical	M18 x 1.5						PRI-※-Y	0.1
TK-T2		M20 x 1.5						-	

Dimensions

2"V-AD
TT-12

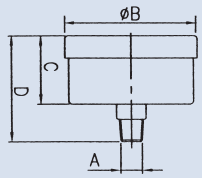

PS82

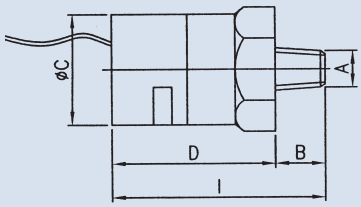

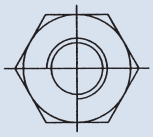

PS41

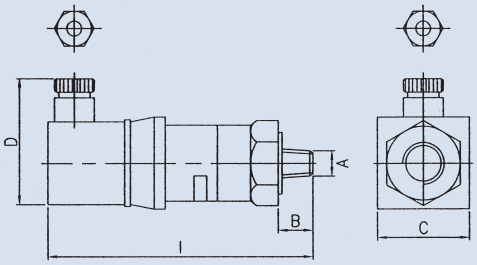

TK-K2

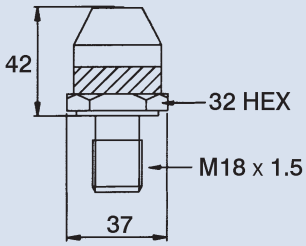

TK-5E

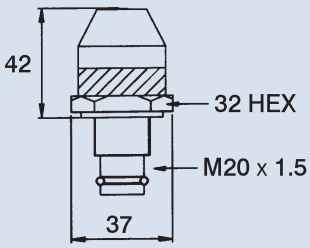

TK-Y2

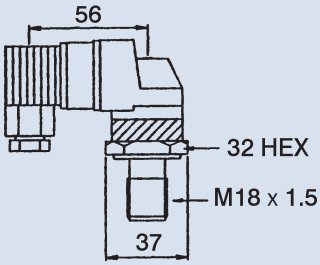

TK-T2

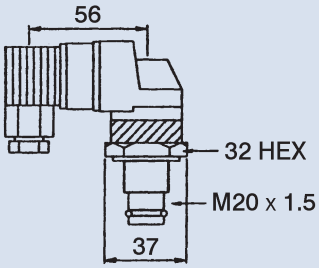

COUPLING

NM-Super flexible coupling

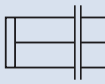

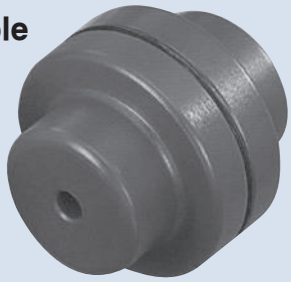

HT-Roller chain flexible coupling

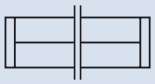

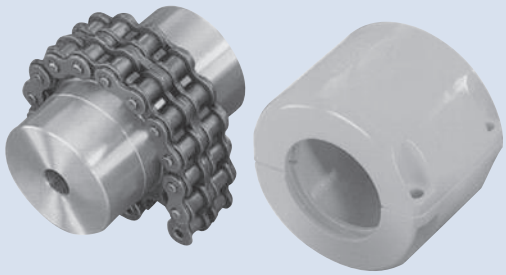

K

Specifications / Dimensions

NM-Super flexible coupling

Model	Torque		Max. Speed (rpm)	Bore Diameter		Boss Dia. D	Outside Dia. OD	Distance Through boss L	Spare & Perm. Tolerance	Weight (kg)
	Normal Kg-m	Max. Kg-m		Min.	Max.					
NM-50	1.3	2.3	13500	7	19	33	50	25	2.5±0.5	0.48
NM-67	2.2	4	10000	9	28	46	67	30	2.5±0.5	1.02
NM-82	5.0	9	8000	10	32	53	82	40	3.0±1.0	1.88
NM-97	10.5	19	7000	12	42	69	97	50	3.0±1.0	3.54
NM-112	16.7	30	6000	14	48	79	112	60	3.5±1.0	5.40
NM-128	26.7	48	5000	18	55	90	128	70	3.5±1.0	8.10
NM-148	41.7	75	4500	22	65	107	148	80	3.5±1.0	13.5
NM-168	69.5	125	4000	28	75	126	168	90	3.5±1.0	19.3
NM-194	112	200	3500	32	85	140	194	100	3.5±1.0	26.3
NM-214	167	300	3000	45	95	157	214	110	4.0±2.0	35.7
NM-240	267	480	2750	60	110	179	240	120	4.0±2.0	46.7
NM-265	417	750	2500	70	120	198	265	140	5.5±2.0	66.3

HT-Roller chain flexible coupling

Model	Bore Diameter		E	L	D	H	Weight (kg)	Case	A	B	Weight (kg)
	Min.	Max.									
HT4012	11	22	80	36	35	61	0.8	HT4012	75	75	0.3
HT4016	15	30	80	36	50	77	1.4	HT4016	92	75	0.4
HT5016	15	40	100	45	60	96	2.6	HT5016	111	85	0.6
HT5018	19	45	100	45	70	106	3.5	HT5018	122	85	0.7
HT6018	22	55	120	54	85	128	6.2	HT6018	142	106	1.0
HT6022	25	75	120	54	110	152	9.8	HT6022	167	106	1.2
HT8018	30	78	150	67	115	170	13.9	HT8018	186	130	2.3
HT8022	35	95	150	67	140	202	20.2	HT8022	220	130	2.4
HT10020	35	110	201	91	160	228	34	HT10020	248	152	3.2
HT12018	48	120	261	119	170	252	51	HT12018	305	180	5.6
HT12022	58	150	261	119	210	300	66	HT12022	355	180	7.1

NM-Super flexible coupling

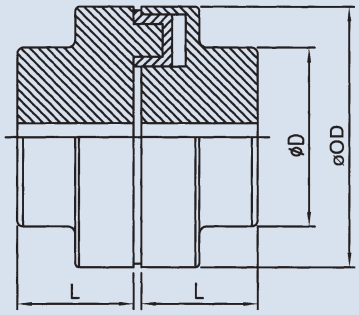

HT-Roller chain flexible coupling

Unit: mm

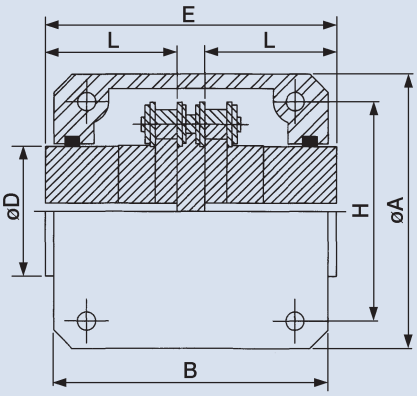

FLUID LEVEL & TEMPERATURE GAUGE, VISIBLE FLOW METER

Fluid level & Temperature gauge

LS

GS

OA

GA

OL-3/4

Visible flow meter

FMC

FMB

Dimensions

Fluid level & Temperature gauge

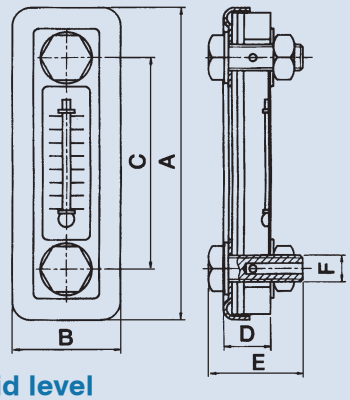

Fuid level

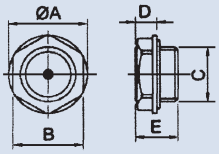

Model	Dimensions (mm)					Bolt Size	Weight
	A	B	C	D	E	F	(kg)
LS-3"	118	41	80	18	37	M10	0.20
LS-5"	180	52	127	19.5	46	M12	0.35
GS-3"	102	38	76	20	39	3/8"	0.11
GS-5"	153	38	127	20	39	3/8"	0.15
OA-3"	105	25	76	13	46.5	M10	0.12
OA-4"	129	25	100	13	46.5	M10	0.13
OA-5"	155	25	127	13	46.5	M10	0.14
OA-68 mm	96	25	68	13	33	3/8"	0.11
OA-80 mm	109	25	80	12.5	46	M10	0.12
OA-120 mm	148	25	120	15	46.5	M10	0.14
OA-140 mm	170	25	140	20	46.5	M10	0.15
OA-148 mm	179	25	148	13	33	M10	0.17
OA-200 mm	230	28	200	25	54	M12	0.29
OA-230 mm	270	30	230	25	55	M12	0.34
OA-300 mm	330	28	300	25	63	M12	0.38
OA-400 mm	430	28	400	25	54	M12	0.44
OA-500 mm	530	28	500	25	54	M12	0.52
GA-60 mm	94	30	60	13	31	3/8"	0.07
GA-100 mm	126	30	100	13	31	3/8"	0.08
OL-3/4"	35	29	26	8	18	-	0.005

Specifications and Dimensions **Visible flow meter**

Model	Port Size	Max. Pressure (bar)	Flow (lpm)	Max. Temp. °C	Dimension WxHxL (mm)	Weight (kg)
FMC-18	PT 3/8"	10	18	115	Hex.22 x 67L	-
FMB-3A10L	NPT 3/8"		10		39 x 39 x 62	0.3
FMB-3A30L	NPT 3/8"		30			0.3
FMB-4A10L	NPT 1/2"		10			0.27
FMB-4A30L	NPT 1/2"		30			0.27
FMB-6A60L	NPT 3/4"		60		50.8 x 50.8 x 76.5	0.26
FMB-6A80L	NPT 3/4"		80			0.26
FMB-8A60L	NPT 1"		60			0.24
FMB-8A80L	NPT 1"		80			0.24
FMB-8A160L	PF 1"		160		57 x 64 x 120	0.79
FMB-10A160L	PF 1-1/4"		160			0.67
FMB-12A400L	PF 1-1/2"		400		76 x 83 x 140	1.3
FMB-16A400L	PF 2"		400			1.2

GLYCERINE BOURDON TUBE PRESSURE GAUGE

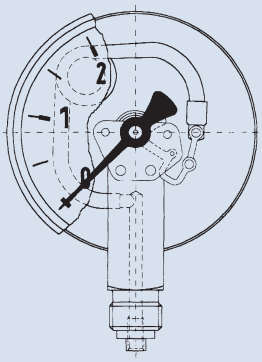

K

How to order

A - 2-1/2 - ※

1 2 3

1	Type	A: Bottom connection	D: Back connection W/O flange	AD: Back connection W/O flange with U-clamp	BD: Back connection with flange
2	Dial diameter				
3	Pressure range				

Specifications

Dial Size	Case, Bezel	Thread	Socket	Bourdon Tube	Movement	Single, Dual Scale	Accuracy (% F.S.)	Ambient Temperature	Weight(kg)	
									A	BD
1-1/2"	SUS 304	1/8" PT, BSP, NPT	Brass or sus 316	Brass or sus 316	Brass or sus 304	psi, kpa, kg/cm², bar	1~2	-50 °F to 160 °F	0.1	0.1
2"		1/4" PT, BSP, NPT							0.18	0.16
2-1/2"									0.25	0.32
4"		3/8", 1/2" PT, BSP, NPT							0.73	0.80

Dimensions

Unit: mm

A-Type Dia. 2"

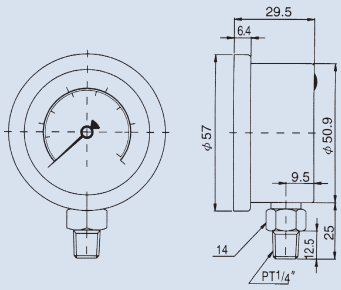

A-Type Dia. 2-1/2", 4"

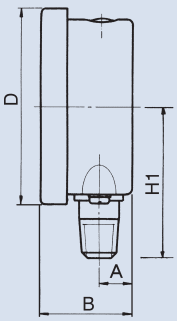

BD-Type Dia. 2-1/2", 4"

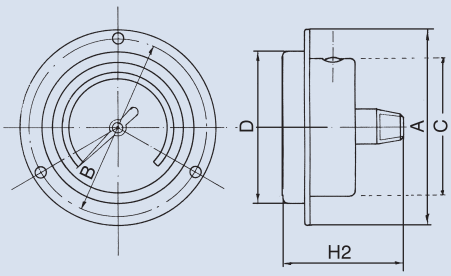

AD-Type

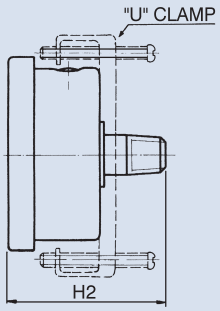

D-Type Dia. 2"

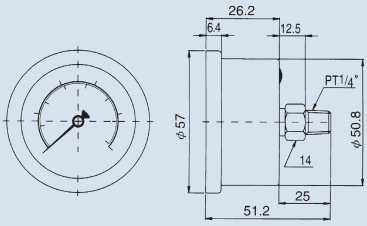

Type	Dia	D	A	B	C	Connector	
						H1	H2
A	2- 1/2"	70	11	33	-	58	-
	4"	107	11	33	-	80	-
BD	2- 1/2"	70	88	-	62	-	63
	4"	107	128	-	99	-	63

PRESSURE GAUGE WITH ELECTRIC CONTACT

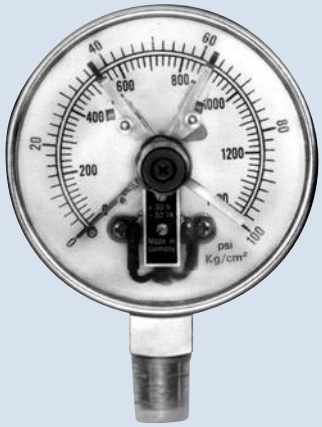

K

How to order

EPG - 75 - A - ※ - ※ - ※ - ※

1 2 3 4 5 6 7

1 Model EPG: Electrical contact type IPG: Explode-proof type EEPG: No-contact type, Sensor control type

Model: EPG, IPG

Operating voltag	DC24~AC250	Carrying current	0.6 A max.
Switching power	30W~50VA max.	Contact pin material	Ag80 Ni20
Making current	1.0 A max.	Ambient temp.	-20 °C to +70 °C
Breaking current	1.0 A max.		

Model: EEPG

Operating voltag	DC24~AC250	Operating time	1.0 millisecond
Switching power	50VA	Releasing time	0.2 millisecond
Breaking current	0.7A DC/AC	Operating Temperature	-40 °C to +125 °C
Carrying current	1.5A DC/AC	Storage Temperature	-50 °C to +155 °C

2 Dial diameter 75: 3" with 1/4" connect thread 100: 4" with 1/2" connect thread

3 Mounting type A: Bottom connection A1: Bottom connection with PC case cover B: Bottom connection with flange D: Low back connection with flange

4 Pressure range (kg/cm²)

76cmHg~0	76cmHg~6	0~1	0~10	0~50	0~350
76cmHg~1	76cmHg~10	0~2	0~15	0~70	0~400
76cmHg~2	76cmHg~15	0~3	0~20	0~100	0~500
76cmHg~3	76cmHg~20	0~4	0~25	0~150	0~700
76cmHg~4		0~7	0~35	0~250	0~1000

5 Contact type A: High contact-normal open B: Low contact-normal closed

6 Thread type PT, NPT, PF

7 Voltage DC24~AC250V

Circuit diagrams of contact devices

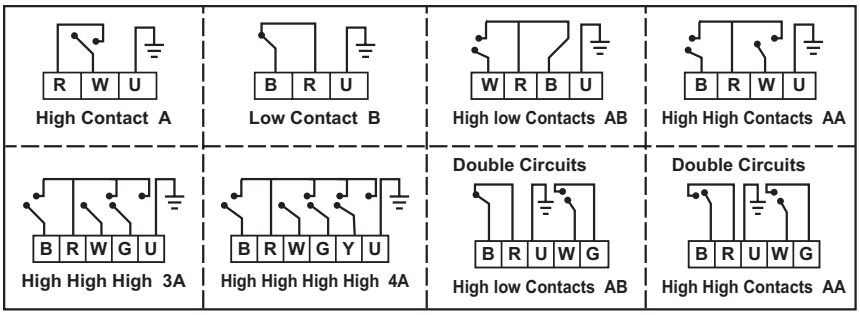

Coloring system of electric wires

B: Black	Y: Yellow
W: White	R: Red (common)
G: Green	U: Gray (earth)

Contact wires

A: W & R	AA: B (A1), W (A2) & R
B: B & R	3A: B (A1), W (A2), G (A3) & R
AB: W (A), B (B) & R	4A: B (A1), W (A2), G (A3), Y (A4) & R

Specifications

Gauge type: Pressure gauge, Vacuum gauge, Compound gauge

Scale: kg/cm², bar, kpa, mpa, psi

Case: chrome-plated steel

Lens: Acrylic

Pointer: Aluminum

Tubing: Brass or stainless steel AISI 316

Movement: Stainless steel AISI 304

Connection: Brass or stainless steel 304, 316

Accuracy: ±1.5% F.S

PRESSURE GAUGE WITH ELECTRIC CONTACT

K

Dimensions

Unit: mm

EPG-75-A

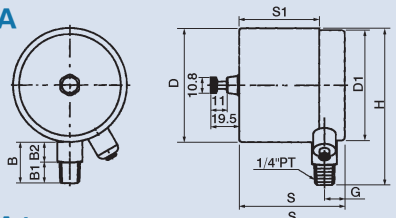

EPG-75-B

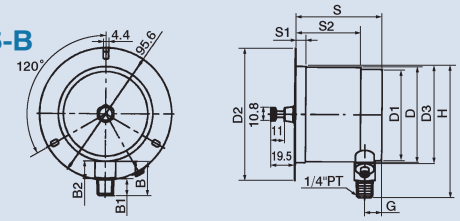

EPG-75-A1

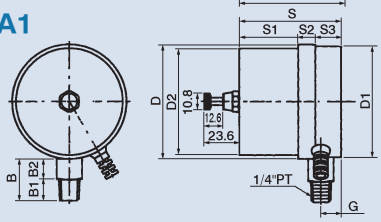

EPG-75-D

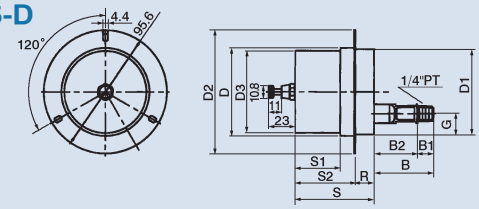

Model	D	D1	D2	D3	B	B1	B2	S	S1	S2	S3	R	G	H	Weight (kg)
EPG-75-A	77.6	74.8	-	-	28	14	14	71.5	54.1	-	-	-	13.8	106.2	0.5
EPG-75-A1	77.2	74.8	71.6	-	28	14	14	69.4	39.5	11.5	17.4	18.0	13.7	-	0.6
EPG-75-B	77.6	74.8	108	78.6	28.2	14	14.2	71	8.2	53	-	-	13.8	106.2	0.6
EPG-75-D	77.6	74.8	108	72	46	14	32.5	69.3	39.5	52.7	-	16.6	18.2	-	0.6

EPG IPG-100-A

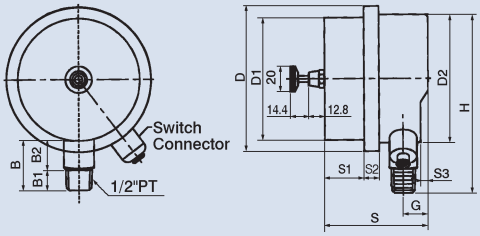

EPG IPG-100-D

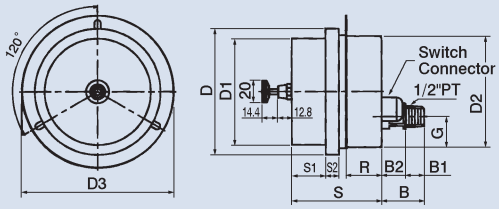

Model	D	D1	D2	D3	B	B1	B2	S	S1	S2	S3	R	G	H	Weight (kg)
EPG-100-A	115	97	101.6	-	34	16	18	82	31	12	6	-	20	141.5	0.86
IPG-100-A															
EPG-100-D	115	97	101.6	138.8	39	17	22	82	31	12	-	31.8	28	-	1
IPG-100-D															

EEPG-100-A

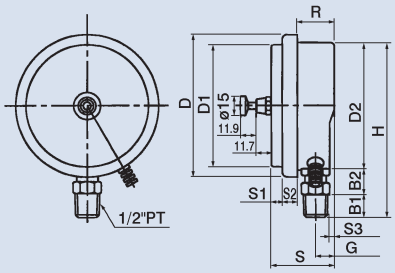

EEPG-100-B

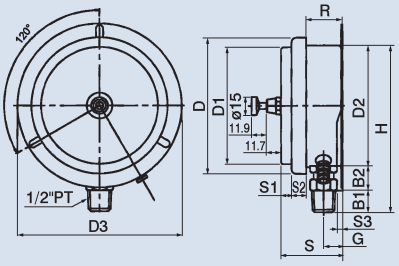

EEPG-100-D

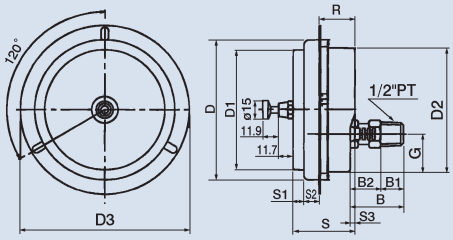

Model	D	D1	D2	D3	B	B1	B2	S	S1	S2	S3	R	G	H	Weight(kg)
EEPG-100-A	111	95.2	98.4	-	-	18	24	49	8.5	12	3.5	28.5	14.5	136	0.8
EEPG-100-B	111	95.2	98.4	133.8	-	18	24	49	8.5	12	3.5	28.5	14.5	136	0.8
EEPG-100-D	111	95.2	98.4	133.8	42	18	24	49	8.5	12	3.5	28.5	30	-	0.8

DIGITAL PRESSURE GAUGE / SWITCH / TRANSDUCER

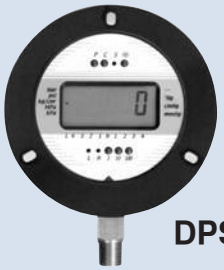

DPS-75

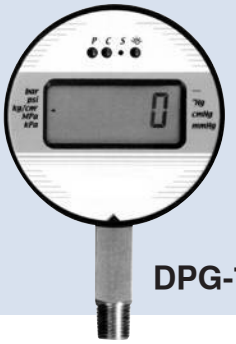

DPG-75

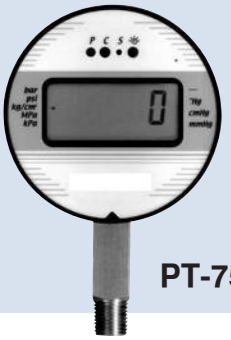

PT-75

K

How to order

DPG - 75 - A120 - (200) or 15 - N - L - N - B - 1(DPS/PT) - 1(DPS only)

1 2 3 4 5 6 7 8 9 10

1	Model DPG: Digital pressure gauge DPS: Digital pressure switch PT: Pressure transducer / transmitter (using D24 power only)
2	Dial diameter 75: 3"
3	Power D24: 5~24 Volts DC input (2-wire wiring / 1.5 meters) A120: 100~120 Volts AC adapter (included) + D24 A240: 220~240 Volts AC adapter (included) + D24
4	Pressure ranges (psi) / kg/cm² V: Vacuum

0~15: (15) / 1	0~30: (30) / 2	0~40: (40) / 3	0~60: (60) / 4	0~100: (100) / 7	0~140: (140) / 10
0~200: (200) / 15	0~280: (280) / 20	0~350: (350) / 25	0~500: (500) / 35	0~570: (570) / 40	0~700: (700) / 50
0~1000: (1.0K) / 70	0~1400: (1.4K) / 100	0~2100: (2.1K) / 150	0~2800: (2.8K) / 200	0~3500: (3.5K) / 250	0~4200: (4.2K) / 300
0~5000: (5.0K) / 350	0~5700: (5.7K) / 400	0~7000: (7.0K) / 500	0~8500: (8.5K) / 600	0~10000: (10K) / 700	0~15000: (15K) / 1000

5	Type of connection Standard: PT1/4" N: NPT P: PT (BSPT) B: BSP (PF)
6	Type of mounting L: Lower mount B: Lower back mount
7	Flange N: Without front flange F: With front flange
8	Default engineering unit

B: bar	P: psi	K: kg/cm²	M: MPa	A: kPa
1: "Hg	2: cmHg	3: mmHg		

9	Output signal (PT only)	High setting points/contacts (DPS only)

1: 4~20 mA	2: 0~5 VDC	0: None	1: 1 High	2: 2 Highs
3: 0~10 VDC		3: 3 Highs	4: 4 Highs	

10	Low setting points/contacts (DPS only)

0: None	1: 1 Low	2: 2 Lows	3: 3 Lows	4: 4 Lows

DIGITAL PRESSURE GAUGE / SWITCH / TRANSDUCER

K

Specifications

Model	DPG-75	DPS-75	PT-75
Accuracy	±1% Full scale		
Diameter	3 inches (78mm)		
Temperature Ranges	Operating/Medium: 14° ~ 392 °F / -10°~200 °C Storage: 14° ~ 122 °F / -10° ~ 50 °C Ambient: 14° ~ 167 °F / -10° ~ 75 °C		
Pressure Ranges	Negative (Vacuum) and Positive through 0~15000PSI		
Burst Pressure	30% Full scale		
Engineering Units	Vacuum bar, "Hg, cmHg, mmHg Positive bar, psi, kg/cm², MPa, kPa		
LCD Display	5-1/2 Digits LCD, Blue backlit-0.5 inches high		
Connection	Standard 1/4" PT		
Rower Requirement	1.Input 100~120 VAC Adapter @ 60 Hz with output 5 VDC @ 1000 mA (included), or 2.Input 220~240 VAC Adapter @ 50 Hz with output 5 VDC @ 1000 mA (included), or 3.Input 5~24 VDC 2-wire wiring (1.5 meters)		Input 24 VDC 3-wire
Wetted parts	Standard brass or optional stainless steel AISI 304/316		
Case Material	ABS Plastic with black lacquered		
High Pressure Capture	Standard		
Face Membrane	Tactile feedback raised buttons		
Field Calibration	Zero adjustment		
Output Signal	N / A	5 VDC, 3~9 wires wiring (1.5 meters) depending on numbers of setting points/contacts purchased	1. Analog 4~20mA, 3-wire, or 2. 0~5 VDC, 3-wire, or 3. 0~10 VDC, 3-wire
Functional Relay	N / A	1~8 Setting points/contacts depending on numbers of setting points/contacts purchased input 24 VDC required	N / A
Pressure Setting Points Contacts	N / A	1~4 Highs 1~4 Lows Standard 1 High or low	N / A

Dimensions

Unit: mm

DPG/DPS/PT-75 Lower Mount

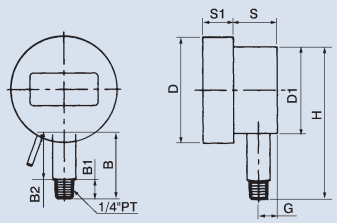

DPG/DPS/PT-75 Lower Mount With Flange

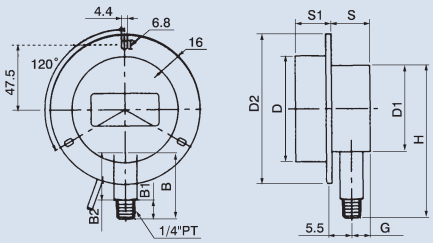

DPG/DPS/PT-75 Lower Back Mount

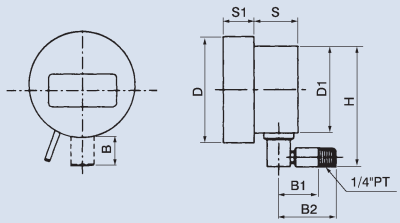

DPG/DPS/PT-75 Lower Back Mount With Flange

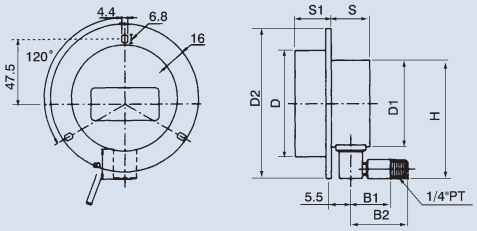

Model	D	D1	D2	B	B1	B2	S	S1	G	H	Weight (kg)		
											DPG-75	DPS-75	PT-75
DPG/DPS/PT-75 Lower Mount	78	63.7	-	49	14	35	32.2	22.6	14	112.4	0.4	0.5	0.4
DPG/DPS/PT-75 Lower Mount With Flange	78	63.5	110	49	14	35	28.3	26.7	14	112.3	0.41	0.51	0.41
DPG/DPS/PT-75 Lower Back Mount	78	63.5	-	22	29.5	42	32.2	22.6	14	112.4	0.4	0.5	0.4
DPG/DPS/PT-75 Lower Back Mount With Flange	78	63.5	110	22	29.5	42	28.3	26.7	14	112.3	0.41	0.51	0.41

4ManPro
Elements For Manufacturing Processes

HI HYDROME

BLOQUES DE CONTROL (MANIFOLD)

BASE PLATE FOR MODULAR VALVE

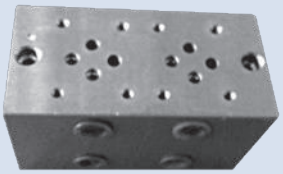

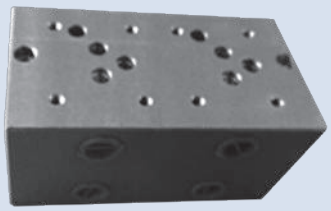

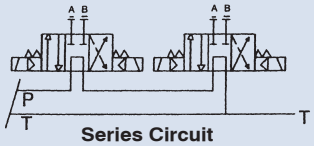

Series Circuit

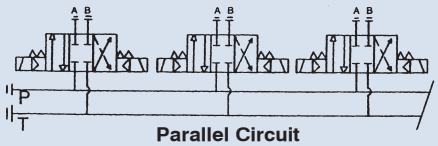

Parallel Circuit

How to order

MMC - 02 - 3W - 1 - 03 - P

1 2 3 4 5 6

1	Model	
2	Norminal valve size	02: Size 1/4" (ISO CETOP 3, NFPA D03, DIN NG 6) 03: Size 3/8" (ISO CETOP 5, NFPA D05, DIN NG 10) 04: Size 1/2" (ISO CETOP 7, NFPA D07, DIN NG 16) 06: Size 3/4" (ISO CETOP 8, NFPA D08, DIN NG 25)
3	Quantity of valve station	
4	Code of port thread	1: PT 2: NPT
5	Port size	For MMC-02 02: 1/4" 03: 3/8" (normal) For MMC-03 03: 3/8" 04: 1/2" (normal) For MMC-04 04: 1/2" 06: 3/4" For MMC-06 06: 3/4" 08: 1"
6	Hydraulic circuit	P: Parallel circuit (normal) S: Series circuit

Specifications

Model	Quantity Of Valve Station	Code Of Port Thread	Port Size	Tie Bolt	Dimensions			Weight (kg)
					L1	L2	L3	
MMC-02-2W	2	1	PT 3/8"	M5 x 0.8P	130	110	65	4.1
		2	NPT 3/8"	#10-24UNC				
MMC-02-3W	3	1	PT 3/8"	M5 x 0.8P	180	160	65	5.9
		2	NPT 3/8"	#10-24UNC				
MMC-02-4W	4	1	PT 3/8"	M5 x 0.8P	230	210	115	7.7
		2	NPT 3/8"	#10-24UNC				
MMC-02-5W	5	1	PT 3/8"	M5 x 0.8P	280	260	115	9.5
		2	NPT 3/8"	#10-24UNC				
MMC-02-6W	6	1	PT 3/8"	M5 x 0.8P	330	310	165	11.3
		2	NPT 3/8"	#10-24UNC				
MMC-03-2W	2	1	PT 1/2"	M6 x 1P	170	156	85	7.3
		2	NPT 1/2"	1/4-20UNC				
MMC-03-3W	3	1	PT 1/2"	M6 x 1P	245	231	85	11
		2	NPT 1/2"	1/4-20UNC				
MMC-03-4W	4	1	PT 1/2"	M6 x 1P	320	306	160	14.7
		2	NPT 1/2"	1/4-20UNC				
MMC-03-5W	5	1	PT 1/2"	M6 x 1P	395	381	160	18.4
		2	NPT 1/2"	1/4-20UNC				
MMC-03-6W	6	1	PT 1/2"	M6 x 1P	470	456	235	22.1
		2	NPT 1/2"	1/4-20UNC				

BASE PLATE FOR MODULAR VALVE

Dimensions

Unit: mm

MMC-02-1W

Weight: 2.3 kgs

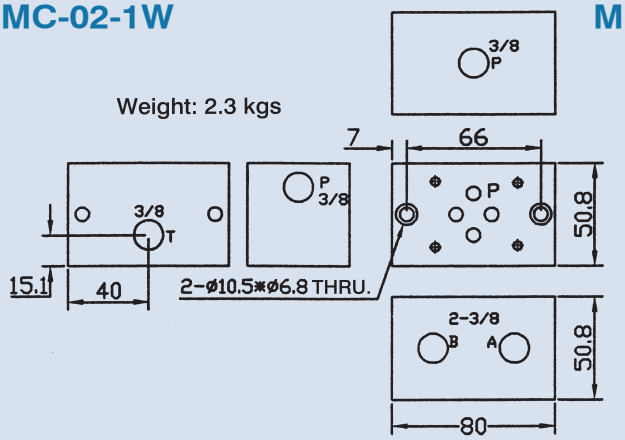

MMC-03-1W

Weight: 3.6 kgs

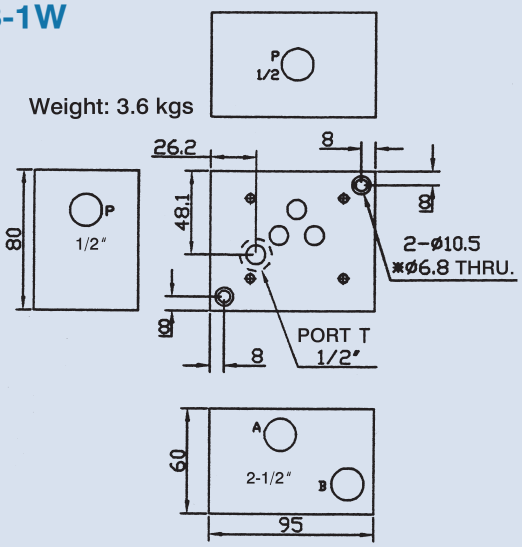

MMC-02-6W

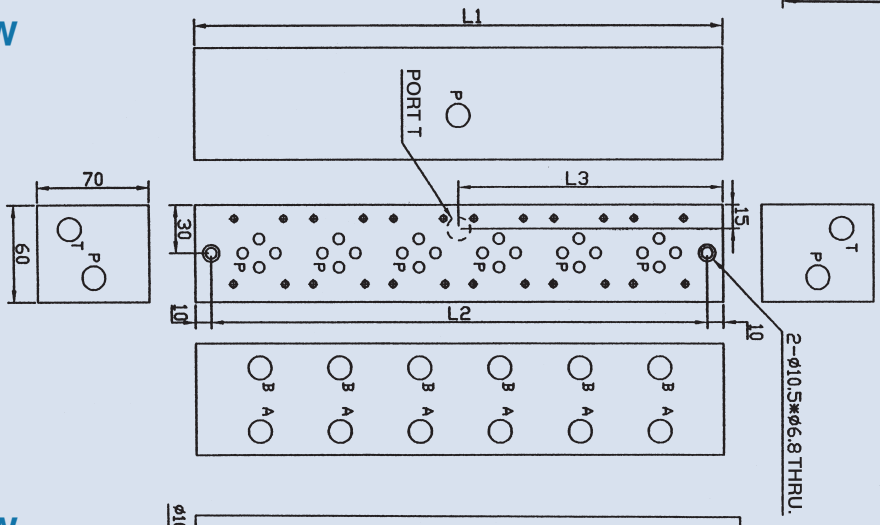

MMC-03-5W

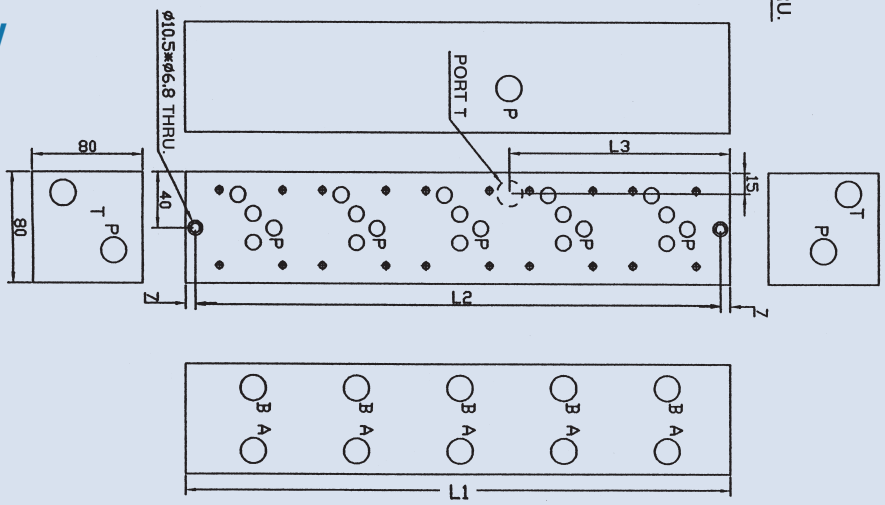

MANIFOLD FOR CARTRIDGE VALVE

Specifications

Ordering Code	Ports	Weight kg (lbs)
CS08-2N-3G-A	G 1/4	0.2
CS08-2N-3G-B	G 3/8	(0.44)
CS10-2N-3G-A	G 1/2	0.37
CS10-2N-3G-B	G 3/8	(0.82)
CS12-2N-3G-A	G 1/2	0.66
CS12-2N-3G-B	G 3/4	(1.46)

Cavity CS08-2N / CS10-2N / CS12-2N

Piping Threads

1P: PT 2N: NPT 3G: PF (G) 4A: SAE 5B: BSP

Max. Pressure 3600 psi (250 bar)

Features

Note: The maximum allowable pressure for the standard aluminum-alloy bodies is 250 bar; we also supply the ductile iron and steel bodies for higher pressure need.

Dimensions

Unit: mm (inch)

CS08-2N

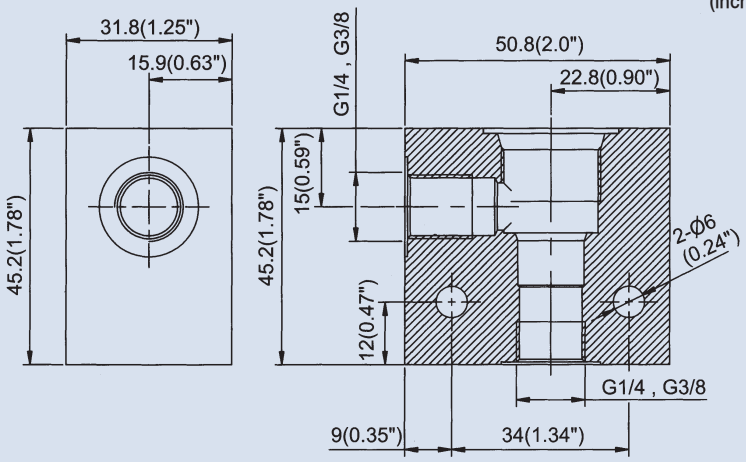

CS10-2N

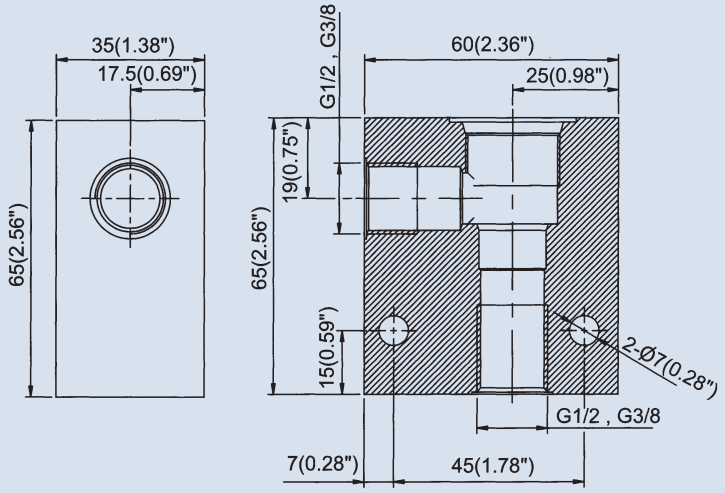

CS12-2N

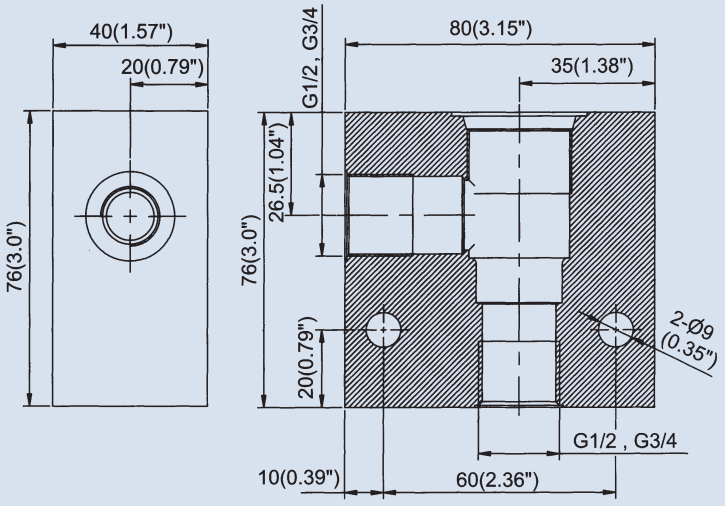

MANIFOLD FOR CARTRIDGE VALVE

F

Specifications

Ordering Code	Ports	Weight kg (lbs)
CS16-2N-3G-A	G 3/4	0.86
CS16-2N-3G-B	G 1	(1.90)
CS20-2N-3G-A	G 1-1/4	1.56
CS20-2N-3G-B	G 1	(3.44)
CS42-2N-3G-A	G 1-1/4	2.10 (4.63)

Cavity CS16-2N / CS20-2N / CS42-2N

Piping Threads

1P: PT 2N: NPT 3G: PF (G) 4A: SAE 5B: BSP

Max. Pressure 3600 psi (250 bar)

Features

Note: The maximum allowable pressure for the standard aluminum-alloy bodies is 250 bar; we also supply the ductile iron and steel bodies for higher pressure need.

Dimensions

CS16-2N

Unit: mm (inch)

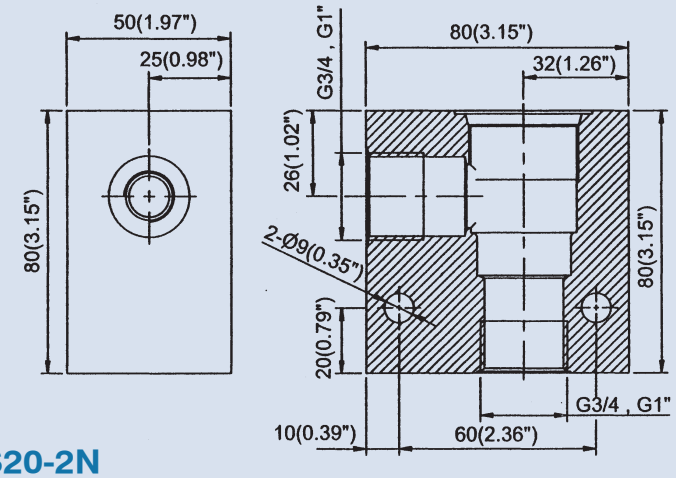

CS20-2N

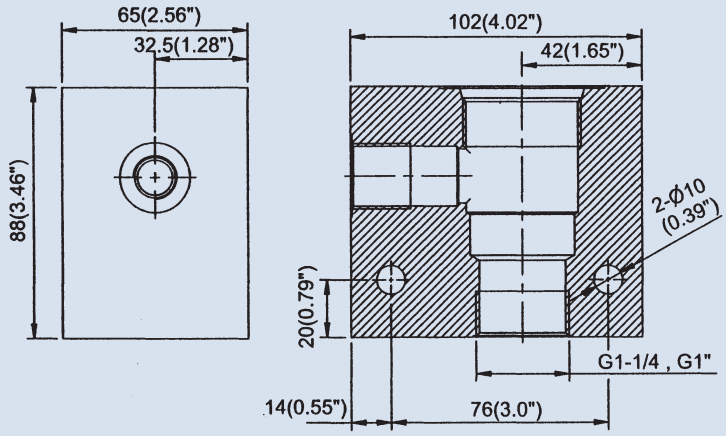

CS42-2N

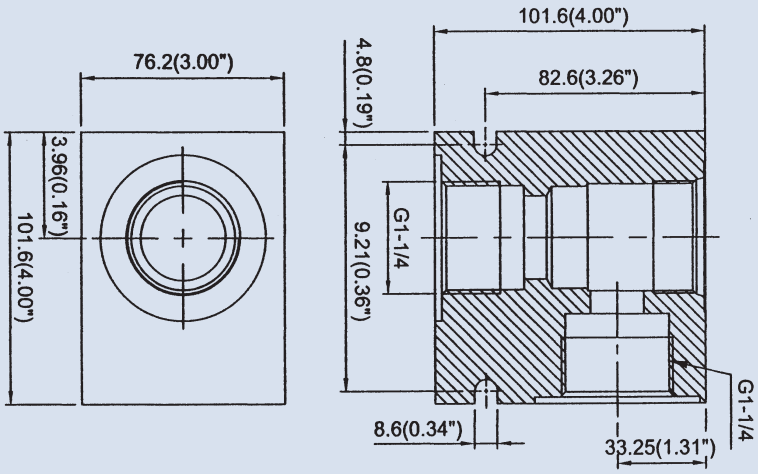

MANIFOLD FOR CARTRIDGE VALVE

Specifications

Ordering Code	Ports	Weight kg (lbs)
CS08-3N-3G-A	G 3/8	0.35 (0.77)
CS10-3N-3G-A	G 3/8	0.40 (0.88)
CS12-3N-3G-A	G 1/2	0.81 (1.79)

Cavity CS08-3N / CS10-3N / CS12-3N

Piping Threads

1P: PT 2N: NPT 3G: PF (G) 4A: SAE 5B: BSP

Max. Pressure 3600 psi (250 bar)

Features

Note: The maximum allowable pressure for the standard aluminum-alloy bodies is 250 bar; we also supply the ductile iron and steel bodies for higher pressure need.

Dimensions

Unit: mm (inch)

CS08-3N

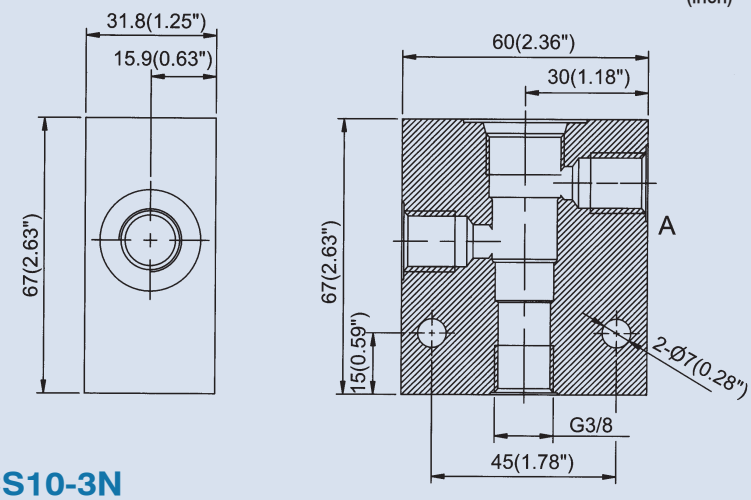

CS10-3N

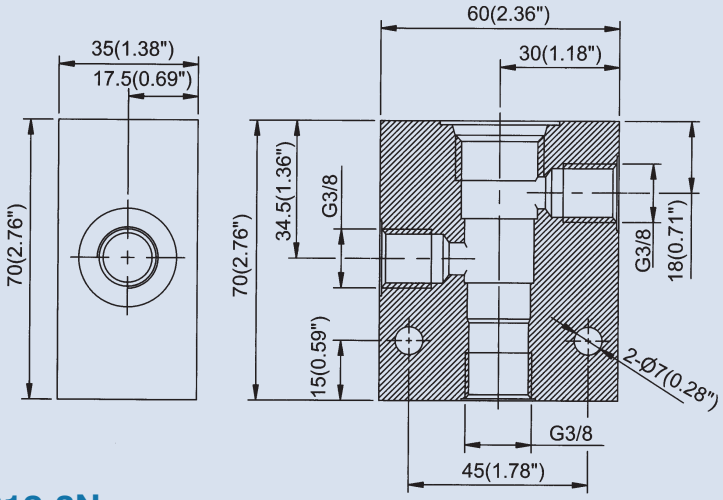

CS12-3N

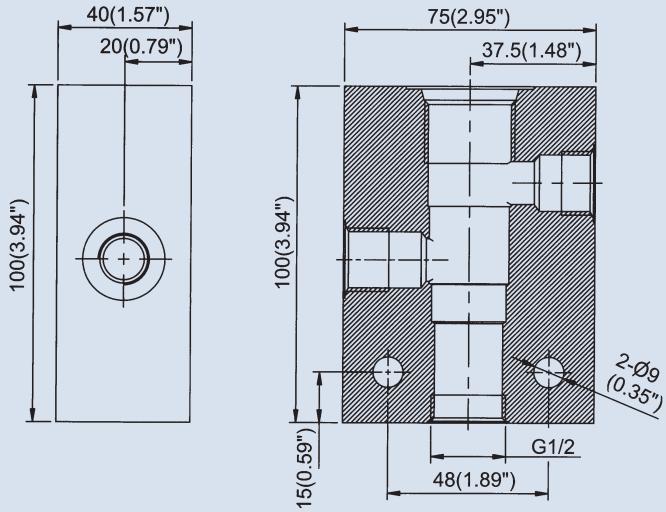

MANIFOLD FOR CARTRIDGE VALVE

F

Specifications

Ordering Code	Ports	Weight kg (lbs)
CS08-3S-3G-A	G 3/8	0.31 (0.68)
CS10-3S-3G-A	G 1/2	0.40 (0.88)
CS12-3S-3G-A	G 3/4	0.81 (1.79)

Cavity CS08-3S / CS10-3S / CS12-3S

Piping Threads

1P: PT 2N: NPT 3G: PF (G) 4A: SAE 5B: BSP

Max. Pressure 3600 psi (250 bar)

Features

Note: The maximum allowable pressure for the standard aluminum-alloy bodies is 250 bar; we also supply the ductile iron and steel bodies for higher pressure need.

Dimensions

Unit: mm (inch)

CS08-3S

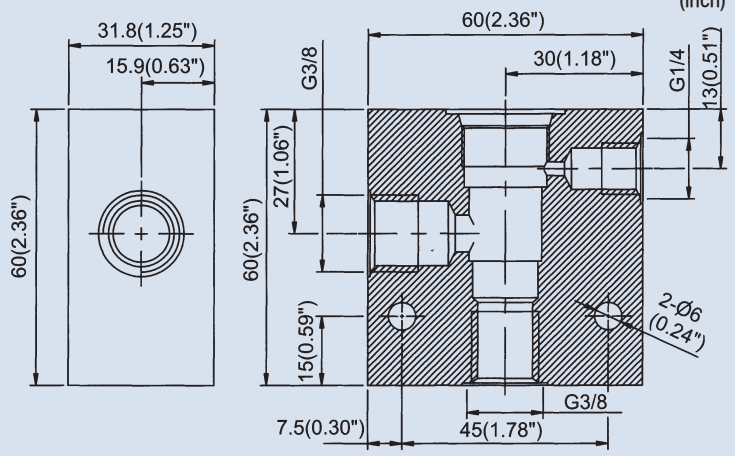

CS10-3S

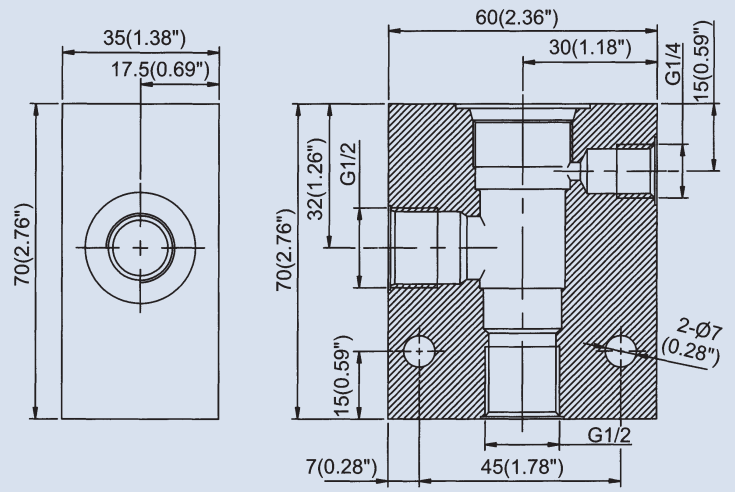

CS12-3S

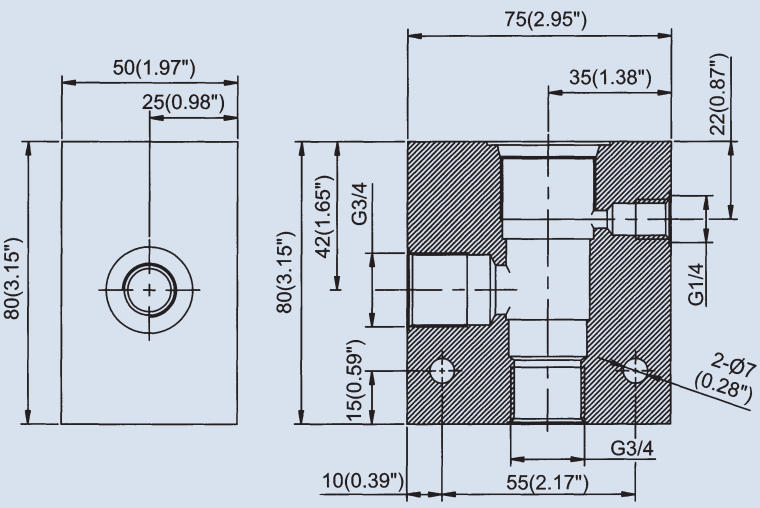

MANIFOLD FOR CARTRIDGE VALVE

Specifications

Ordering Code	Ports	Weight kg (lbs)
CS08-4N-3G-A	G 3/8	0.42 (0.93)
CS10-4N-3G-A	G 1/2	0.48 (1.06)
CS10-4N-3G-B	G 3/8	
CS12-4N-3G-A	G 3/4	1.78 (3.92)

Cavity CS08-4N / CS10-4N / CS12-4N

Piping Threads

1P: PT 2N: NPT 3G: PF (G) 4A: SAE 5B: BSP

Max. Pressure 3600 psi (250 bar)

Features

Note: The maximum allowable pressure for the standard aluminum-alloy bodies is 250 bar; we also supply the ductile iron and steel bodies for higher pressure need.

Dimensions

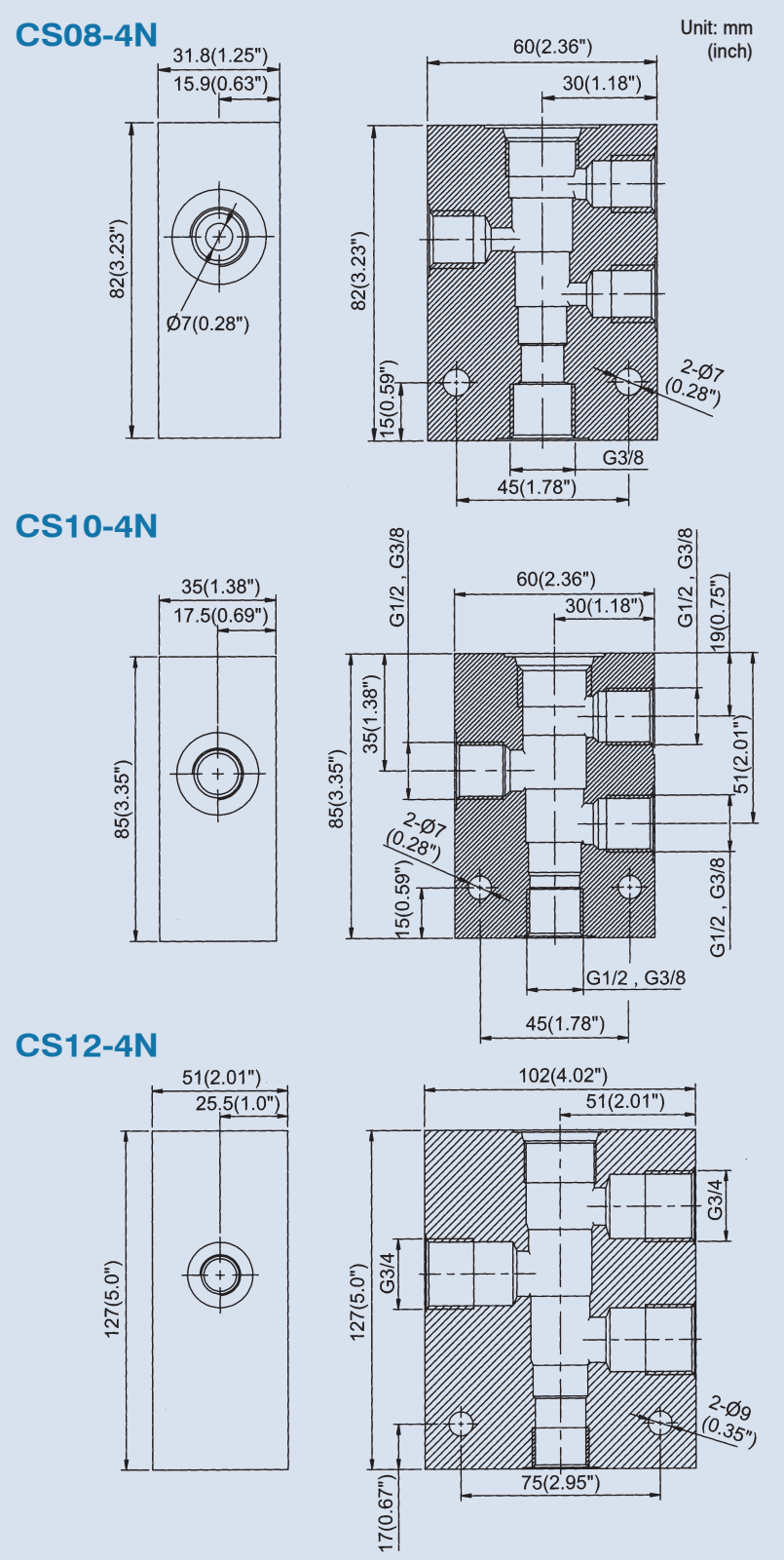

MANIFOLD FOR CARTRIDGE VALVE

F

Specifications

Ordering Code	Ports	Weight kg (lbs)
CST-2A-3G-A	G 3/8	0.65
CST-2A-3G-B	G 1/2	(1.43)
CST-3A-3G-A	G 3/8	0.40
CST-3A-3G-B	G 1/2	(0.88)
CST-3A-3G-C	G 3/4	
CST-5A-3G-A	G 3/8	0.35
CST-5A-3G-B	G 1/2	(0.77)

Cavity CST-2A / CST-3A / CST-5A

Piping Threads

1P: PT 2N: NPT 3G: PF (G) 4A: SAE 5B: BSP

Max. Pressure 3600 psi (250 bar)

Features

Note: The maximum allowable pressure for the standard aluminum-alloy bodies is 250 bar; we also supply the ductile iron and steel bodies for higher pressure need.

Dimensions

CST-2A

Unit: mm

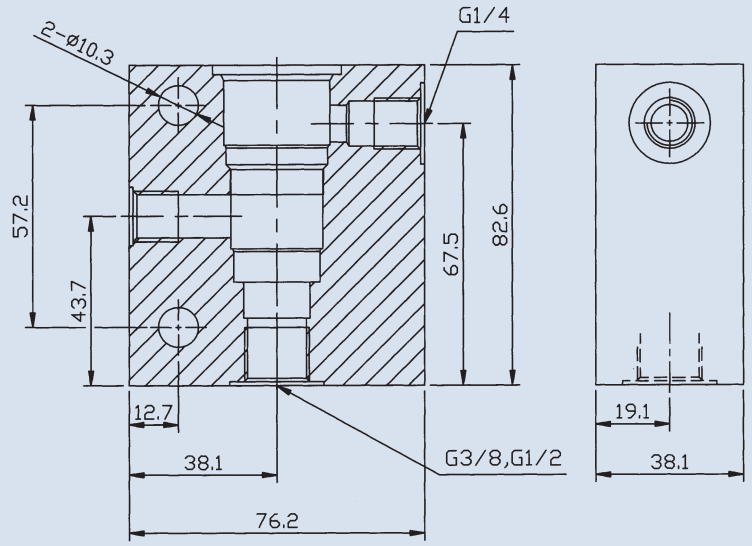

CST-3A

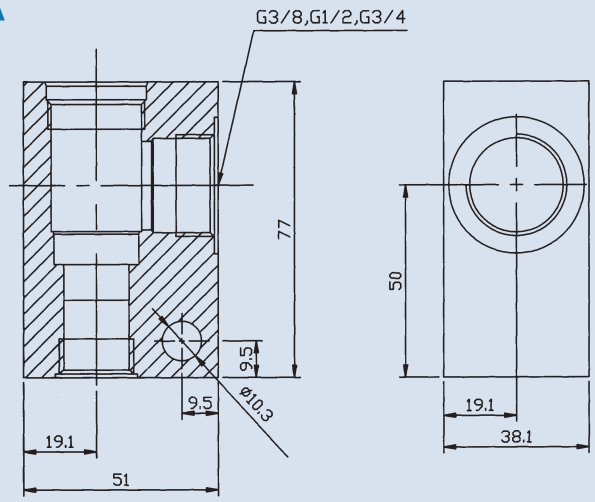

CST-5A

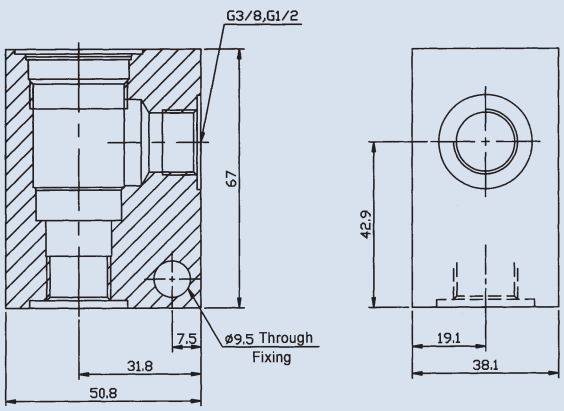

MANIFOLD FOR CARTRIDGE VALVE

Specifications

Ordering Code	Ports	Weight kg (lbs)
CST-10A-3G-A	G 3/8	0.27
CST-10A-3G-B	G 1/2	(0.60)
CST-11A-3G-A	G 1/4	0.50
CST-11A-3G-B	G 3/8	(1.10)
CST-13A-3G-A	G 1/4	0.23
CST-13A-3G-B	G 3/8	(0.51)

Cavity CST-10A / CST-11A / CST-13A

Piping Threads

1P: PT 2N: NPT 3G: PF (G) 4A: SAE 5B: BSP

Max. Pressure 3600 psi (250 bar)

Features

Note: The maximum allowable pressure for the standard aluminum-alloy bodies is 250 bar; we also supply the ductile iron and steel bodies for higher pressure need.

Dimensions

Unit: mm

CST-10A

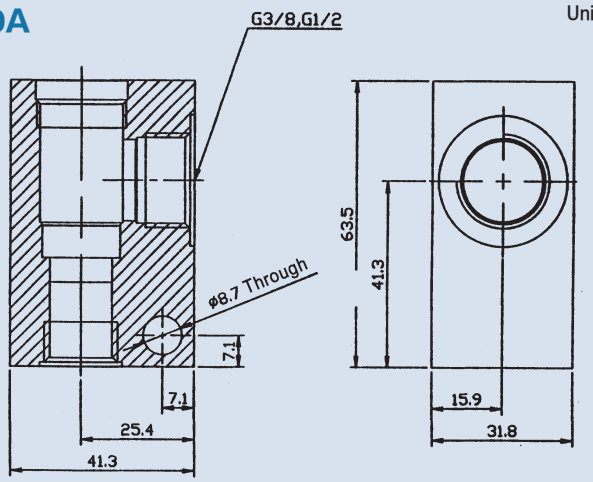

CST-11A

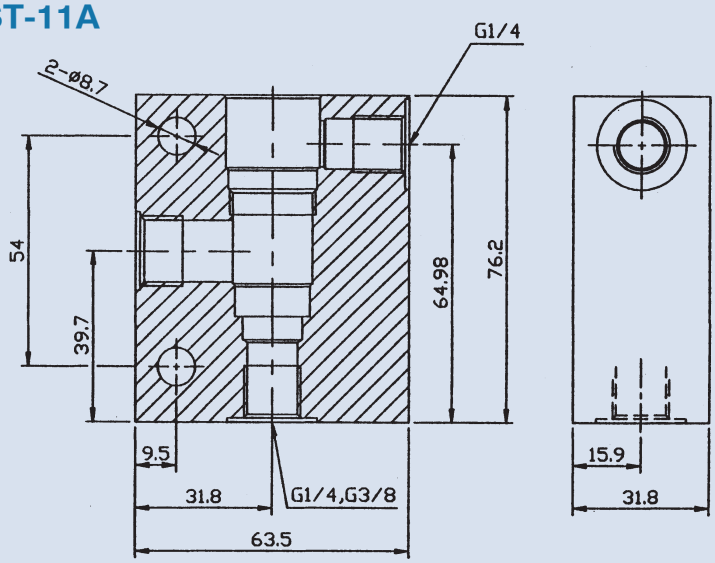

CST-13A

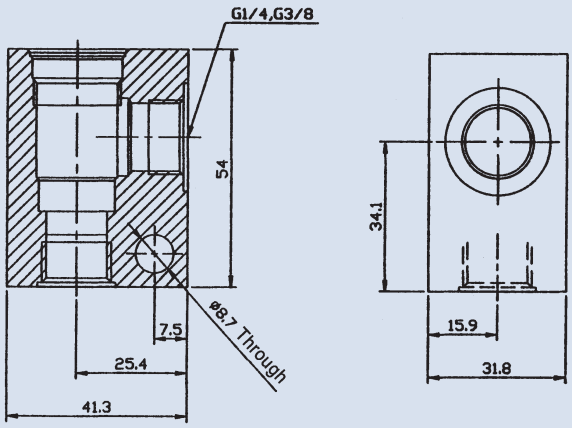

MANIFOLD FOR CARTRIDGE VALVE

F

Specifications

Ordering Code	Ports	Weight kg (lbs)
CST-16A-3G-A	G 3/4	1.21
CST-16A-3G-B	G 1	(2.67)
CST-17A-3G-A	G 3/4	1.69
CST-17A-3G-B	G 1	(3.73)
CST-18A-3G-A	G 1/4	2.83
CST-18A-3G-B	G 3/8	(6.24)

Cavity CST-16A / CST-17A / CST-18A

Piping Threads

1P: PT 2N: NPT 3G: PF (G) 4A: SAE 5B: BSP

Max. Pressure 3600 psi (250 bar)

Features

Note: The maximum allowable pressure for the standard aluminum-alloy bodies is 250 bar; we also supply the ductile iron and steel bodies for higher pressure need.

Dimensions

Unit: mm

CST-16A

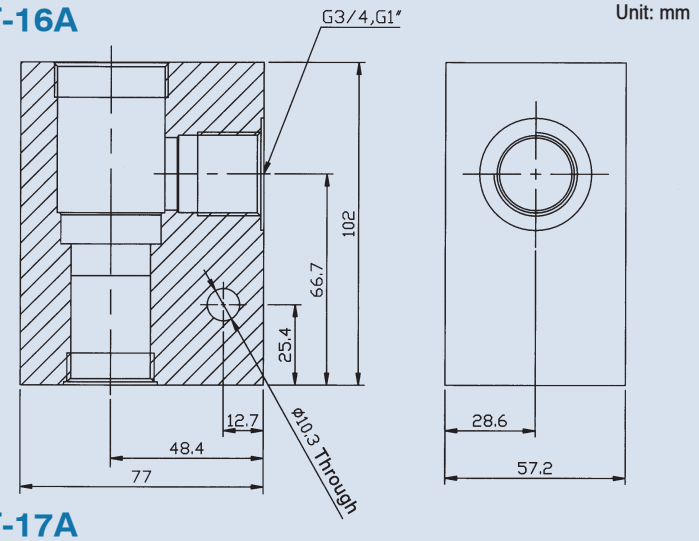

CST-17A

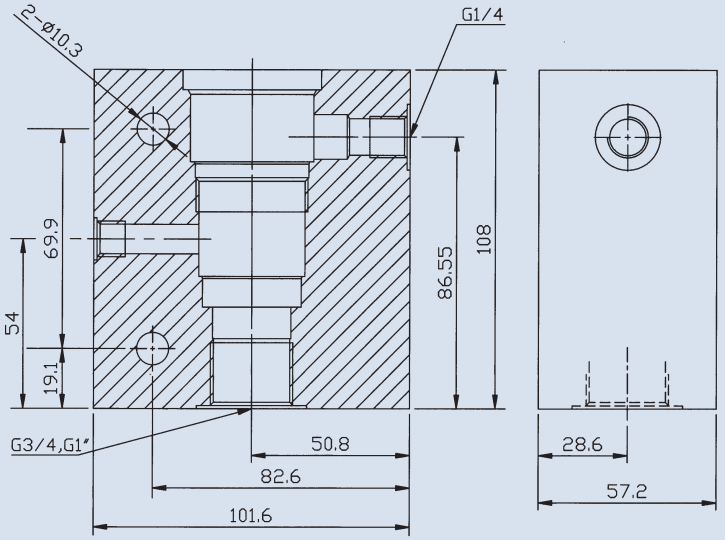

CST-18A

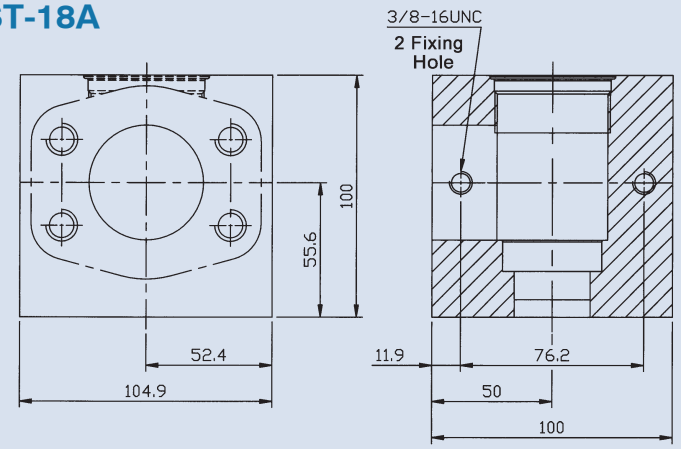

4ManPro
Elements For Manufacturing Processes

HI HYDROME

BOMBAS AXIALES DE PISTON (AXIAL PISTON PUMP)

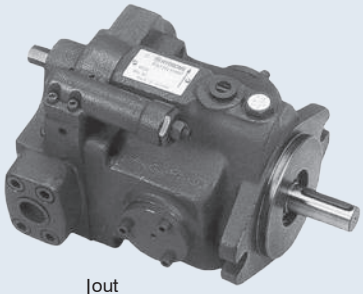

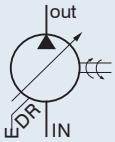

V SERIES AXIAL PISTON PUMP

FEATURES:

1. Combining special internal designs and strict engineering disciplines has reduced noise level to new lows in whole pressure zones.
2. Depending on variety of application needs multiple optional unique control methods are available. It does not only reduce a number of unnecessary hoses, pipes and control valves but also increase efficiency and save horsepower, and cost.
3. Less capacity reservoirs can be selected and applied because of performances of low pressure loss and less head generation.
4. Wide application ranges: it is very suitable for machine tools, plastic injection molding machines, forging machines, other industrial machines and so on.

B

How to order

V - 15 A - 1 - R - B - S - □ – □ – □ – □ – □

1 2 3 4 5 6 7 8 9 10 11 12

1 V: Variable displacement type VR: For Axial port-pipe type VR15 VR18 VR23 VR38 (see page 47)

2 Displacement: 15, 18, 23, 25, 38, 42, 50, 70 (cc/rev)

3 Control types: A,B,C,CG,D,DG,E,EG,F,
FG,G,GJ,GM,HL□,HJ,HK□,HQ□

Code	Spring
None	Standard pressure: 7 bar
B	Middle pressure: 14 bar
C	High pressure: 21 bar

* This spring code is useful for HL, HK, HQ types.

4 Pressure adjusting 1: 8-70 bar 2: 15-140 bar 3: 20-210 bar 4: 20-250 bar

5 Shaft rotation (Viewed from shaft end) R: Clockwise L: Counter clockwise

6 Direction of pipe connections: None: Side port B: Axial port

7 None:

S: SAE. J498b

Code	Type	Number of teeth	Pitch
S	V15 V18	13	16/32 DP
S1		9	
S2		11	

Code	Type	Number of teeth	Pitch
S	V23,V25 V38,V42	13	16/32 DP
S1		15	
S	V50 V70	14	12/24 DP
S1		17	

8 Voltage: A: AC 100V (50/60Hz) B: AC 110V (60Hz) C: AC 200V (50/60Hz) D: AC 220V (60Hz) E: DC 12V F: DC 24V

9 Threads Code

Code	Port	Threads
10	PT	Pipe type
40	BSPP (G)	Metric

Code	Port	Threads
50	NPT	Inch
60	SAE (O-ingring)	Inch

Code	Port	Threads
70	M	Metric

10 Thru drive & 2nd pump:

None: Single pump C: SAE AA, ø50.8 mm D: SAE A, ø82.55 mm E: SAE B,ø101.6 mm F: SAE C, ø127 mm
I: Metric, ø63 mm J: Metric, ø80 mm K: Metric, ø100 mm L: Metric, ø125 mm

11 Design number: X: Standard X1: Low Pressure Z: Idling Relief

12 Links type (For V15, V18): None: Standard A: SAE A 2 bolt

Specifications

Model	Displacement cc/rev (in³/rev)	Unloading Conditions (lpm) (GPM)		Pressure Adj. Range bar (psi)	Max. Pressure bar (psi)	Input Speed Range (rpm)		Weight (kg)
		1500 rpm	1800 rpm			Min.	Max.	
V15A	15 (0.90)	22.5 (5.78)	27.0 (7.05)	1: 8-70 (115-100) 2: 15-140 (210-2000) 3: 20-210 (280-3000) 4: 20-250 (280-3500)	250 (3500)	500	1800	13
V18A	17.8 (1.09)	26.7 (7.05)	32.0 (8.45)					13
V23A	23.0 (1.40)	35.4 (9.11)	41.4 (10.94)					22
V25A	25.0 (1.52)	37.5 (9.66)	45.0 (11.60)		210 (3000)			22
V38A	37.8 (2.31)	56.7 (14.98)	68.0 (17.96)		250 (3500)			26
V42A	42.0 (2.56)	63.0 (16.23)	76.0 (19.58)		210 (3000)			26
V50A	51.5 (3.14)	77.2 (20.37)	92.7 (4.49)					55
V70A	69.7 (4.25)	104.5 (27.60)	125.4 (33.13)					56
V15A-V15A	15 / 15	22.5 / 22.5	27 / 27		250 (3500)			28.5
V23A-V23A	23.0 / 23.0	35.4 / 35.4	41.4 / 41.4					46.5
V15A-V38A	15 / 37.8	22.5 / 34.5	27 / 68					41.5
V38A-V38A	37.8 / 37.8	56.7 / 56.7	68 / 68					54.5
V15A-V70A	15 / 69.7	22.5 / 104.5	27 / 125.4		210 (3000)			71.5
V38A-V70A	37.8 / 69.7	56.7 / 104.5	68 / 125.4					84.5

V SERIES AXIAL PISTON PUMP

Control Types

Control Types	JIS Symbols	Characteristics	Feature
A: Pressure Compensator Control	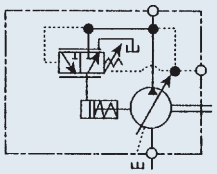	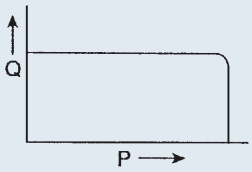	**1.** When system pressure increase and reach preset pressure the flow decrease automatically and pressure maintain without changing. **2.** Power and pressure can be adjusted manually.
B: Multi-stage Flow & Single stage Pressure Control Type (With Cylinder)	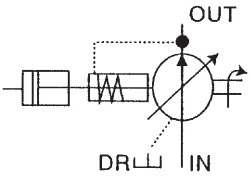	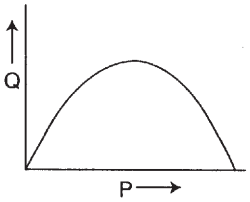	**1.** Flow can be adjusted from 0 to maximum and pressure can be maintaining at preset pressure. **2.** Absorbing impact and vibration which are produced by up and down motions of actuators. It is suitable for lifting equipment etc.
C: 2 stage Pressure & Flow Control Type	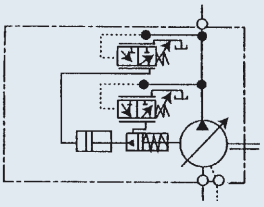	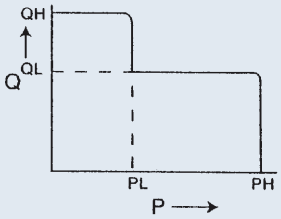	**1.** Low consumption electric motor can be selected to save energy because of the functions of high flow at low pressure and low flow at high pressure. **2.** When pressure increase and reach preset pressure "PH", flow is reduced to "QL". **3.** Pressure "PH""PL", and Flow "QH""QL" can be adjusted optionally. **4.** It is applied to actuators requiring long unloaded or short loaded strokes. Speedy and horsepower efficient.
CG: 2 stage remote Pressure & Flow Control Type	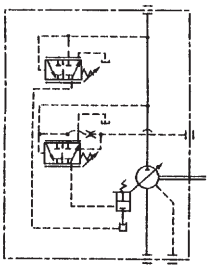	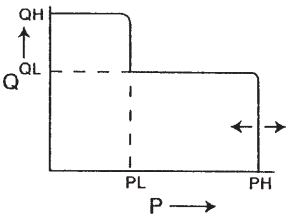	**1.** The same function of "C" control type. **2.** The pressure and the range can be adjusted remotely by the integrated remote pressure control valve. **3.** Proportional Electro-hydraulic pressure control can be applied with HYDROME proportional valve.
D: Solenoid Controlled Pressure Compensating Type with Unloading Device	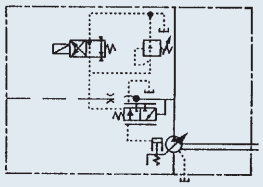	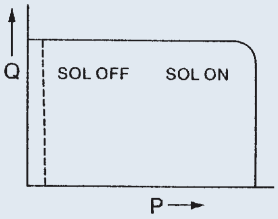	**1.** Same as type A and unloading function added. **2.** It is applied to systems requiring long term unloading operation. **3.** When solenoid is turned off, pump operation under unloading condition maintains low noise level and oil heat generation.
DG: Solenoid Controlled Pressure Compensating Type with Unloading & Remote Device	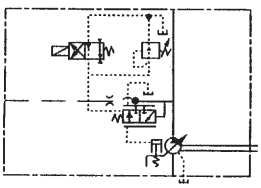	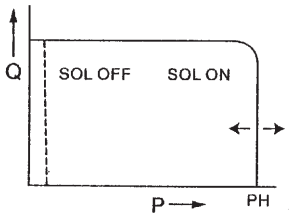	**1.** The same function of "C" control type. **2.** The pressure and the range can be adjusted remotely by the integrated remote pressure control valve. **3.** Proportional Electro-hydraulic pressure control can be applied with HYDROME proportional valve.

V SERIES AXIAL PISTON PUMP

Control Types

Control Types	JIS Symbols	Characteristics	Feature
E: Dual Pressure Control	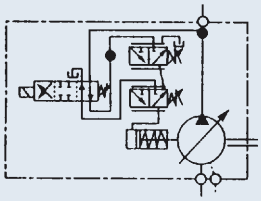	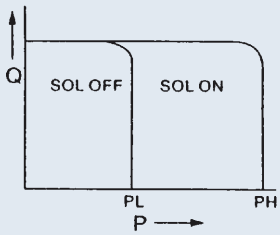	**1.** Preset high and low pressure can be controlled by switching directions of solenoid control valves. **2.** This type is applied to actuators requiring 2 stage pressures with single speed. **3.** One of "PL" and "PH" can be optionally be high pressure.
EG: Dual & Remote Pressure Control	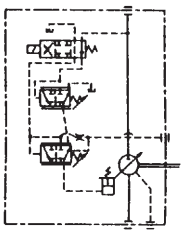	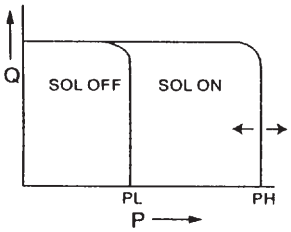	**1.** The same function of "E" control type. **2.** The pressure and the range can be adjusted remotely by the integrated remote pressure control valve. **3.** Proportional Electro-hydraulic pressure control can be applied with HYDROME proportional valve.
F: 2 flow-2 pressure p.c.by solenoid operated valve	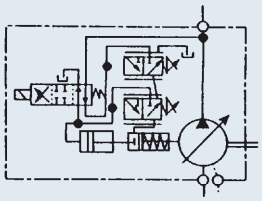	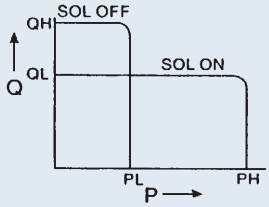	**1.** Actuators can be shifted slowly (high pressure low flow) and quickly (low pressure high flow) by switching directions of solenoid control valve. When solenoid valve turns on, pressure increase to "PH", and flow decrease to "QL". **2.** Pressure "PL", "PH" and flow "QL", "QH" can be adjusted optionally. **3.** This type is applied to actuator requiring operations of shift speed from high to low or low to high.
FG: 2 flow-2 pressure p.c. by solenoid operated & remote valve	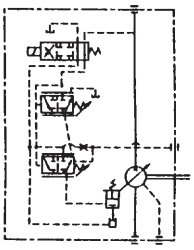	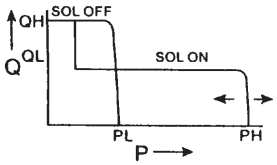	**1.** The same function of "F" control type. **2.** The pressure and the range can be adjusted remotely by the integrated remote pressure control valve. **3.** Proportional Electro-hydraulic pressure control can be applied with HYDROME proportional valve.
G: Remote pressure compensator control	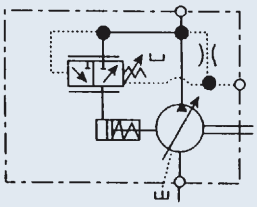	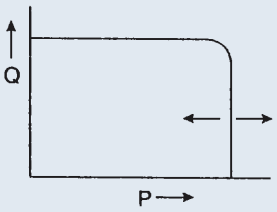	**1.** The same function of "A" control type. **2.** Pressure can be adjusted remotely by the integrated remote pressure control valve.
GJ: Proportional Pressure with interface	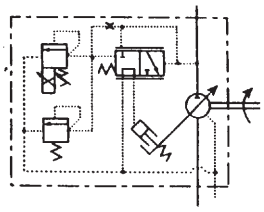	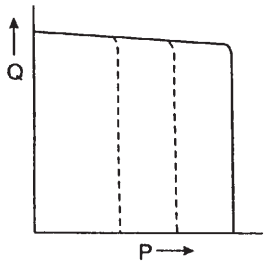	**1.** Same as Type "GM" and proportional valve added. **2.** The proportional valve is installed on the NG 6 interface to reach Proportional Electro-hydraulic control to save energy.

B

V SERIES AXIAL PISTON PUMP

B

Control Types

Control Types	JIS Symbols	Characteristics	Feature
GM: Remote Interface (Not include pilot valve)	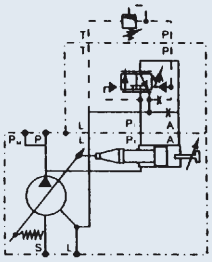	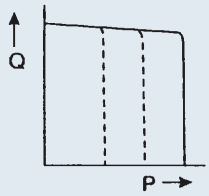	**1.** GM control with a NG6 interface, supply an installation for pilot valve to prove the operating pressure. The pressure setting can be set directly from the control panel of the machine. **2.** The remote pressure compensator responds faster and offers more stable pressure. **3.** The adjustment can also be manual or proportional pressure control.
HL: Load Sensing Compensator	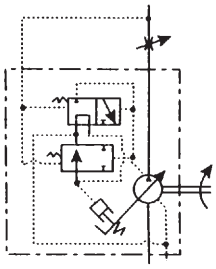	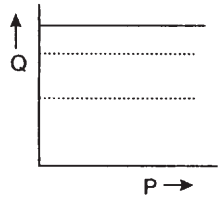	**1.** The pump outlet can be controlled by the setting pressure value of flow control valve. An ideal energy conservation system can be configurated by combining the proportional directional control. **2.** When setting pressure value, flow is changed depending on throttle valve. The sensing flow feedback function can reach to low oil heat generation and saving energy.
HJ: Load Sensing & Proportronal Electro-hydraulic Pilot Relief Valve	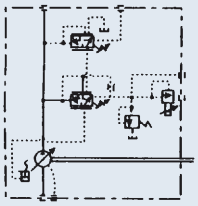	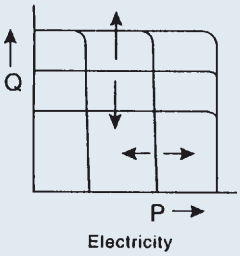	**1.** Same as Type "HL" and proportional pressure function added. **2.** Supplied with proportional Electro-hydraulic pilot relief valve can reach to horse-saving and energy-saving.
HK: Proportional Electro-hydrauic Load Sensing Type	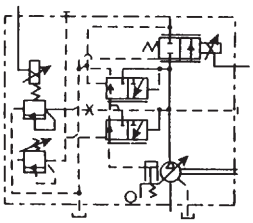	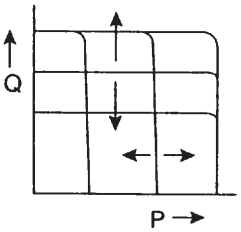	**1.** HK type supplies the system pressure and flow depending on the proportional pressure and flow, voltage, and load value to save the energy. When in waiting circle, the outlet displacement and horse power loss are colse to zero. When pressure reaches to preset value, the flow decrease to the min., and the pressure is constant to reach low oil heat generation and energy loss. **2.** HK type can save 30%~50% energy compare to vane pump and gear pump+PQ valve. It is an energy-saving and environmental design.
HQ: Load-sensing Proportional Flow control	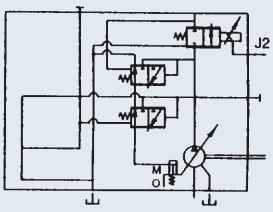	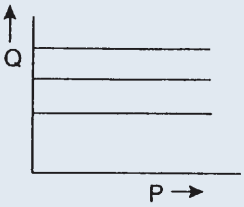	**1.** Same as Type "HL" and proportional flow function added. **2.** The proportional flow control allows the adjustment of the pumps output flow with an electrical input signal. Supplied and adjusted the displacement by the electronic control module.

V SERIES AXIAL PISTON PUMP

Performance curves

MEASURING CONDITIONS

ROOM TEMPERATURE:20±2°C
SPEED OF ROTATION:1800 rpm
OIL:ISO VG 32-68
OIL CAPACITY:40 lpm
ADOPTS SEALED CIRCUIT:70 bar
ADJUST PRESSURE:35 bar

V15, 18 Series

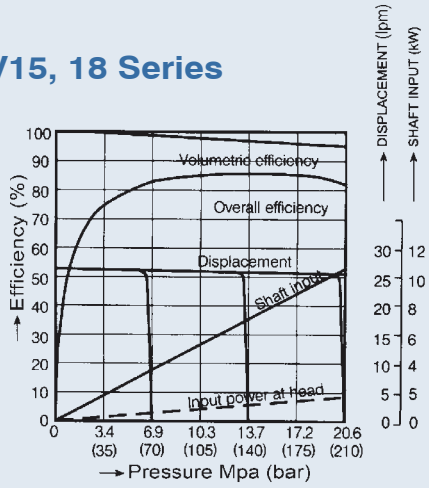

V23, 25 Series

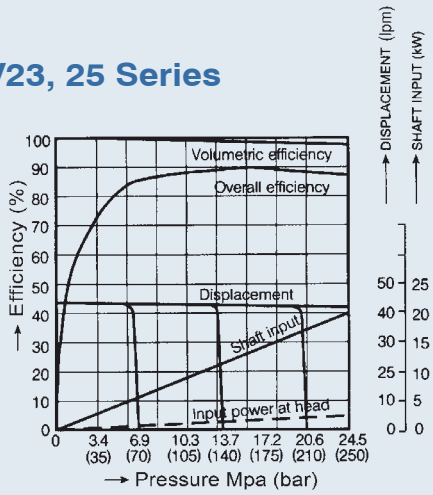

V38, 42 Series

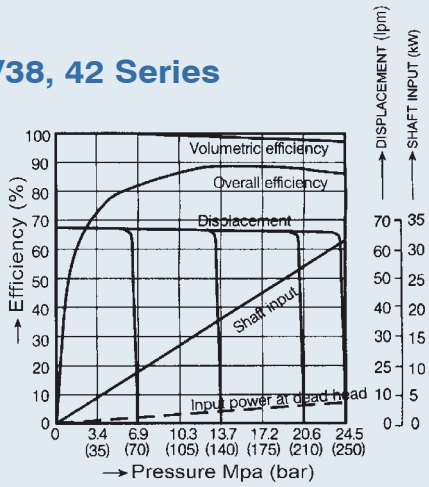

V50 Series

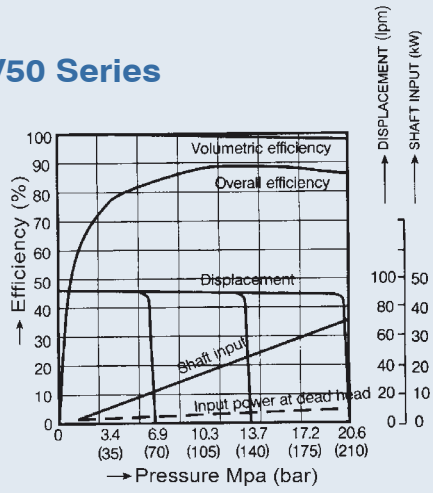

V70 Series

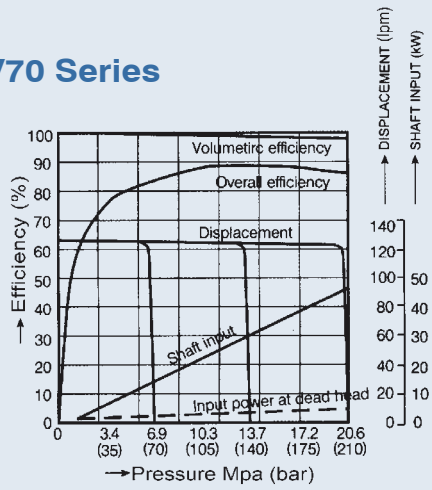

B

V SERIES AXIAL PISTON PUMP

Performance curves

V15, 18

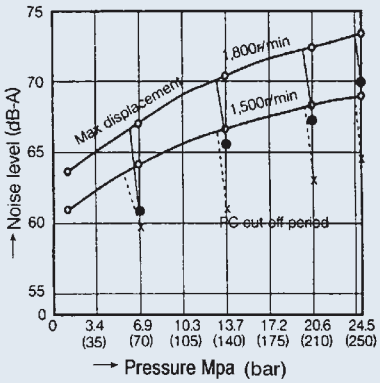

V23, 25

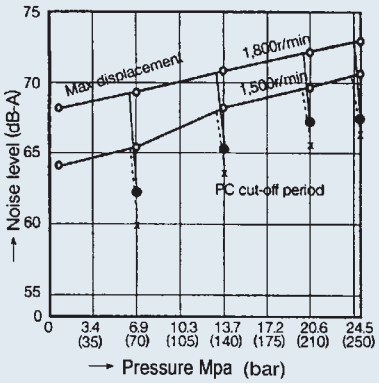

V38, 42

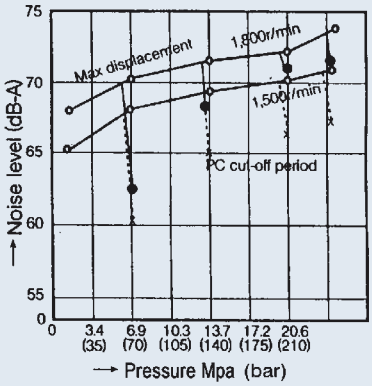

V50, 70

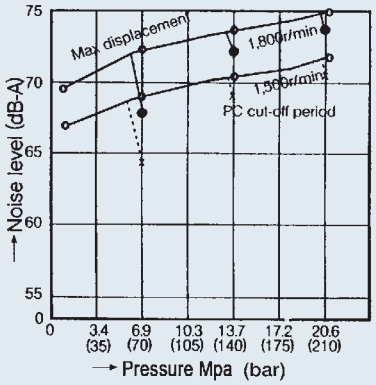

V15, 18 Drain volume characteristic

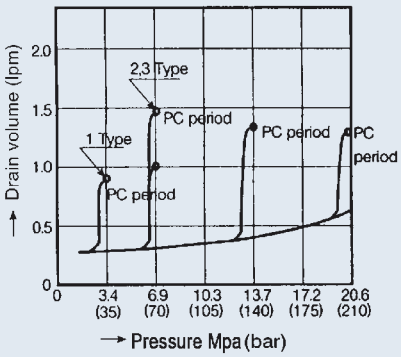

V23, 25 Drain volume characteristic

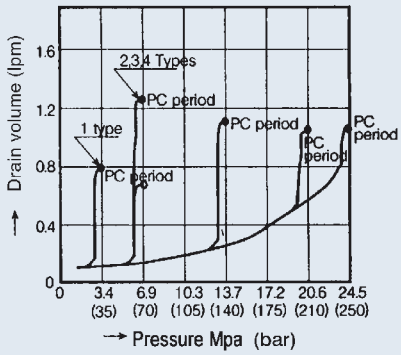

V38, 42 Drain volume characteristic

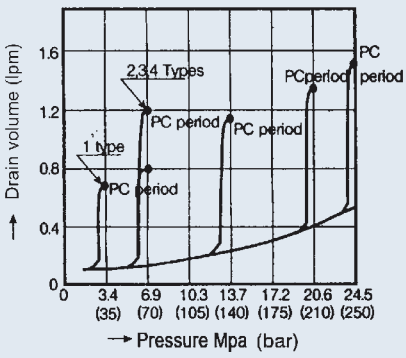

V50, 70 Drain volume characteristic

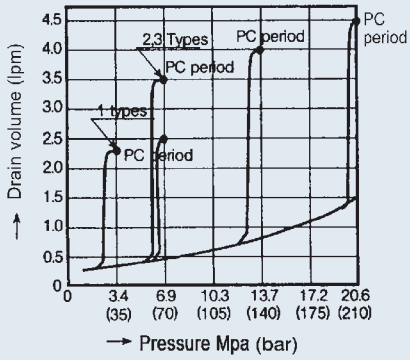

V SERIES AXIAL PISTON PUMP

Dimensions

V15A, V18A Pressure Compensator

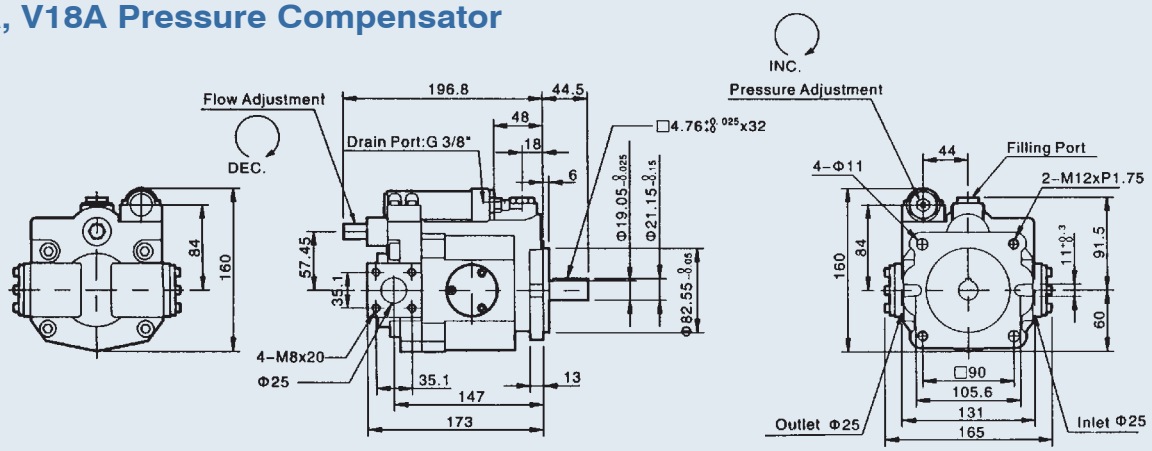

V15A, V18A Pressure Compensator (SAE A 2 bolt)

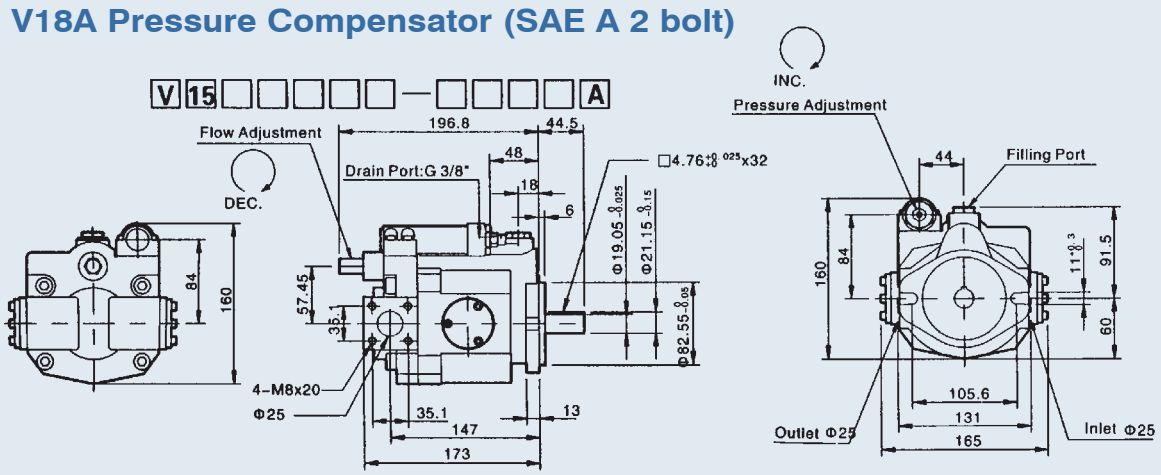

V15B, V18B Multi-stage Flow & Single-stage Pressure Compensator Control (With cylinder)

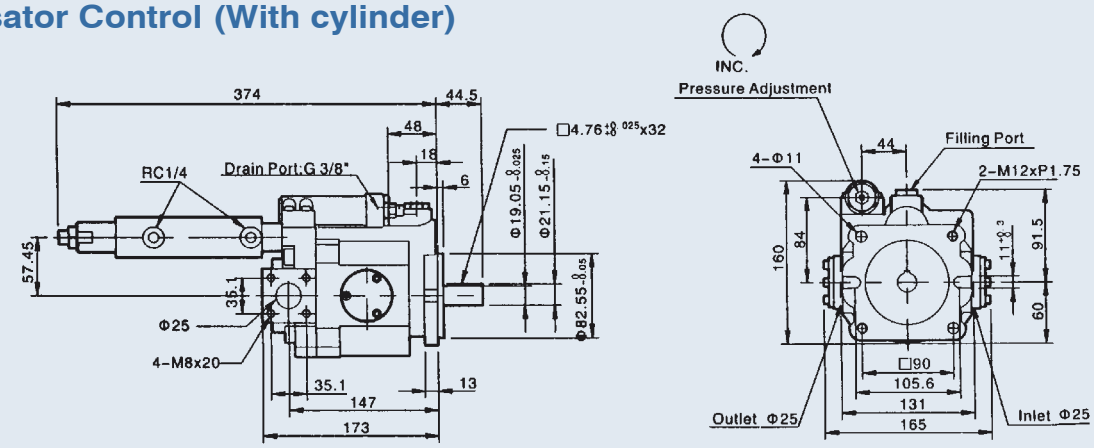

B

V SERIES AXIAL PISTON PUMP

Dimensions

V15C, V18C 2-stage Pressure & Flow Control Type

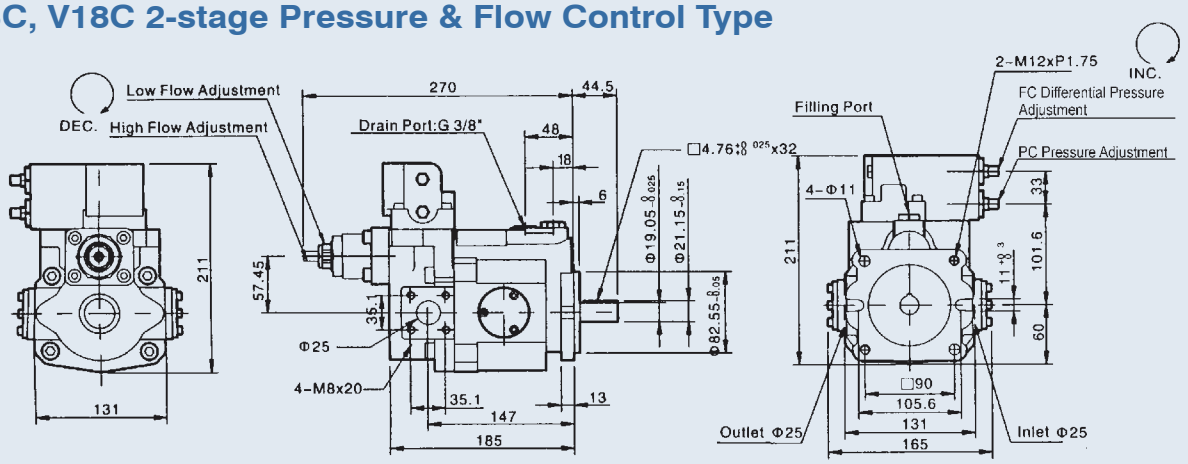

V15CG, V18CG 2-stage Pressure & Flow Control Type with Remote

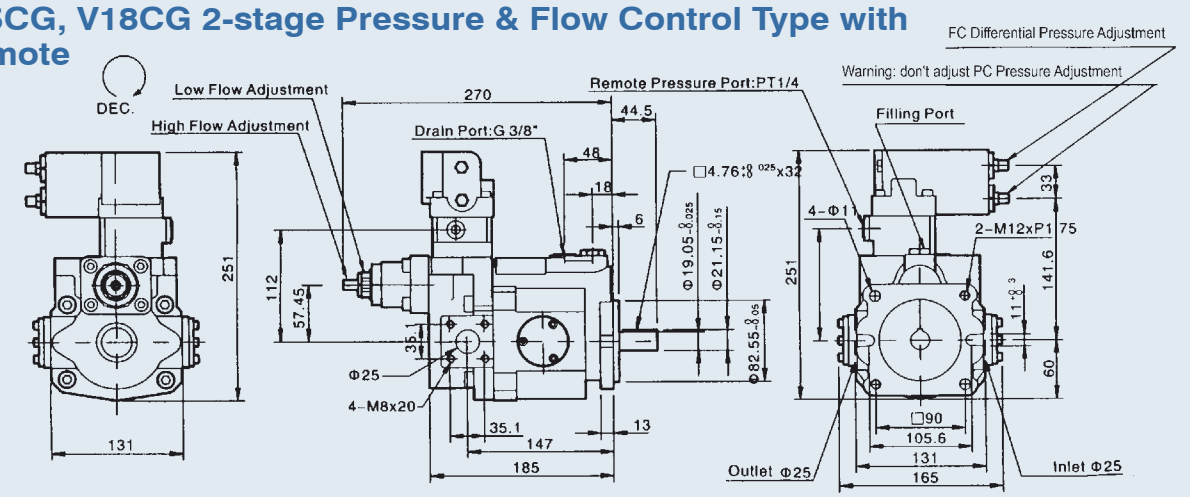

V15D, V18D Solenoid Controlled Pressure Compensating Type with Unloading Device

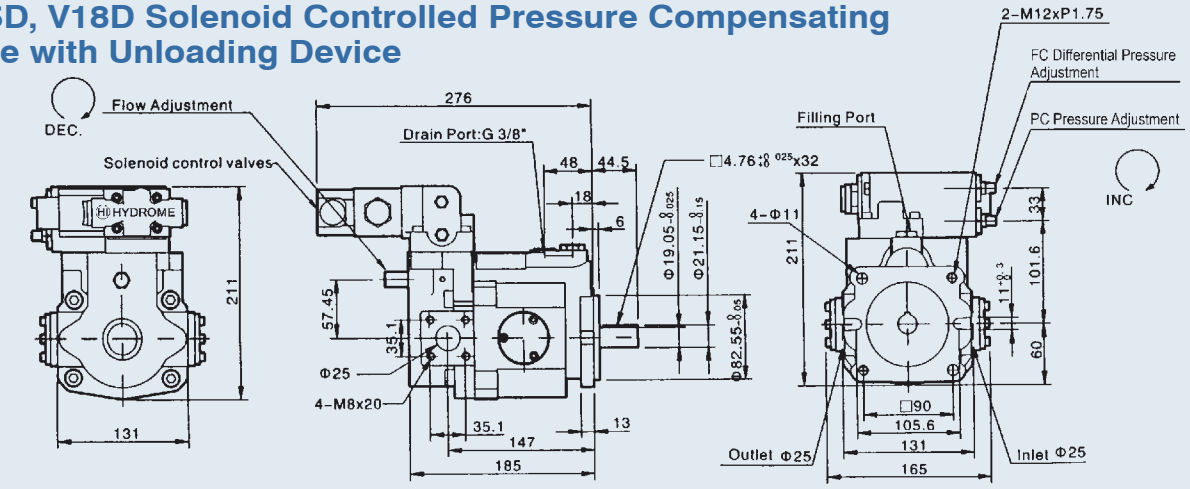

Dimensions

V15DG, V18DG Solenoid Controlled Pressure Compensating Type with Unloading Device & Remote

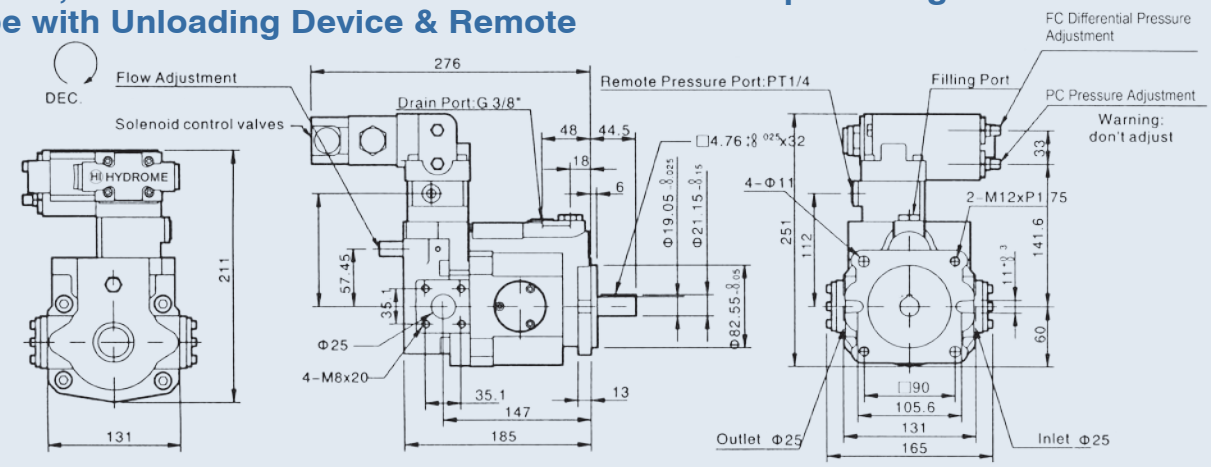

V15E, V18E Dual Pressure Control

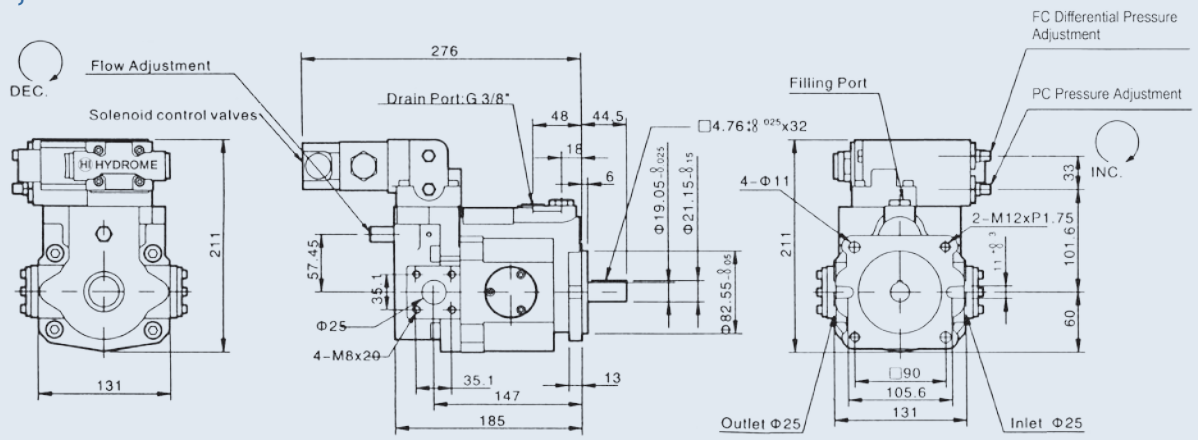

V15EG, V18EG Dual & Remote Pressure Control

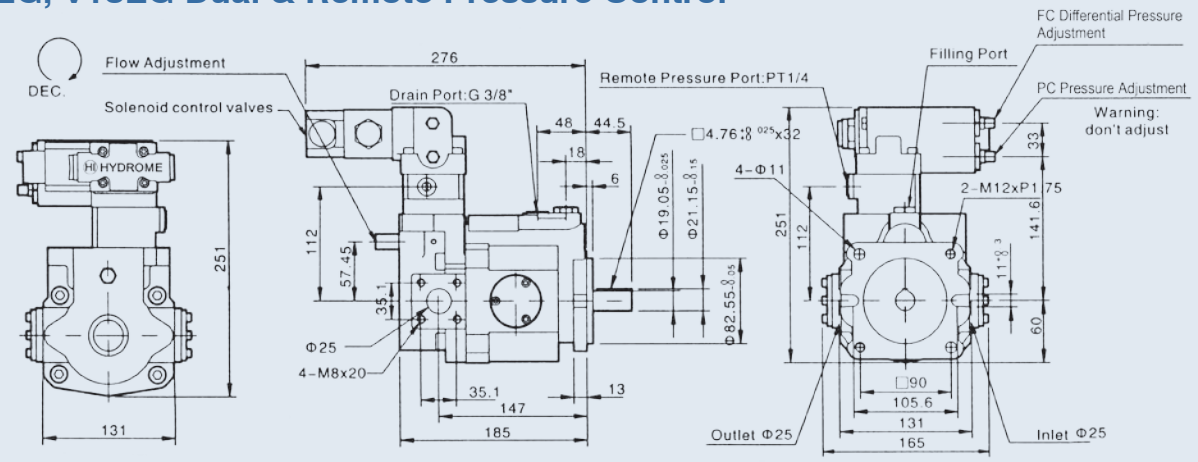

V SERIES AXIAL PISTON PUMP

Dimensions

V15F, V18F 2 Flow-2 Pressure Control by Solenoid Operated Valve

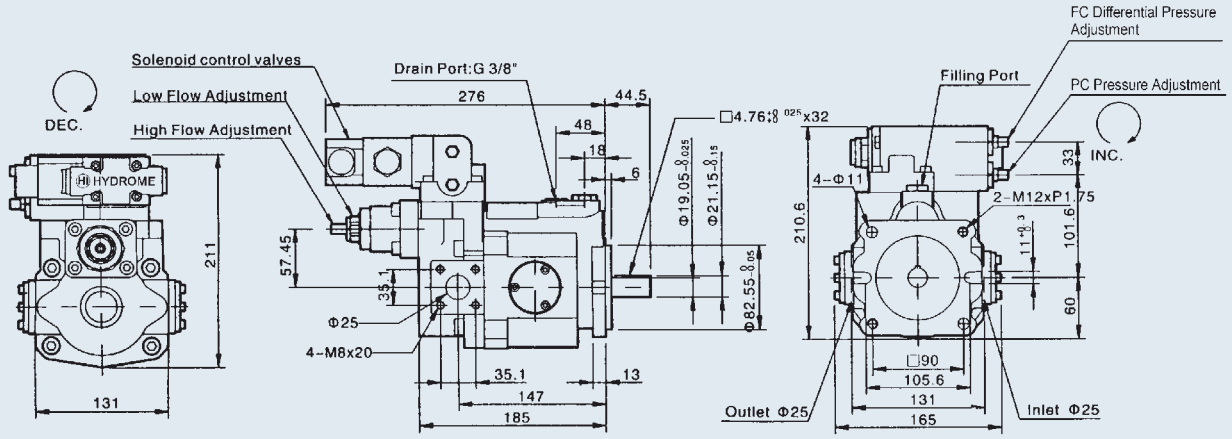

V15FG, V18FG 2 Flow-2 Pressure Control by Solenoid Operated & Remote Valve

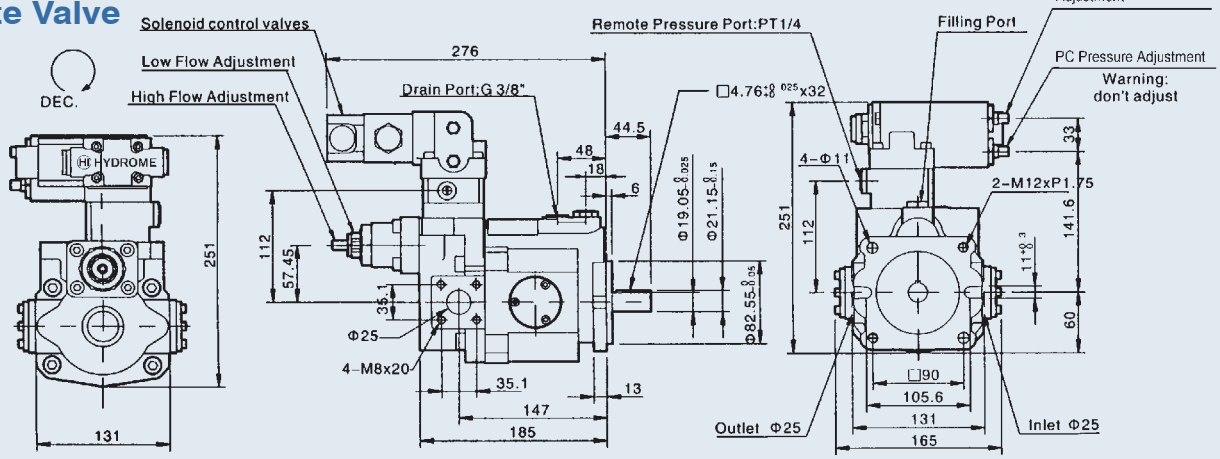

V15G, V18G Remoted Pressure Compensator Control

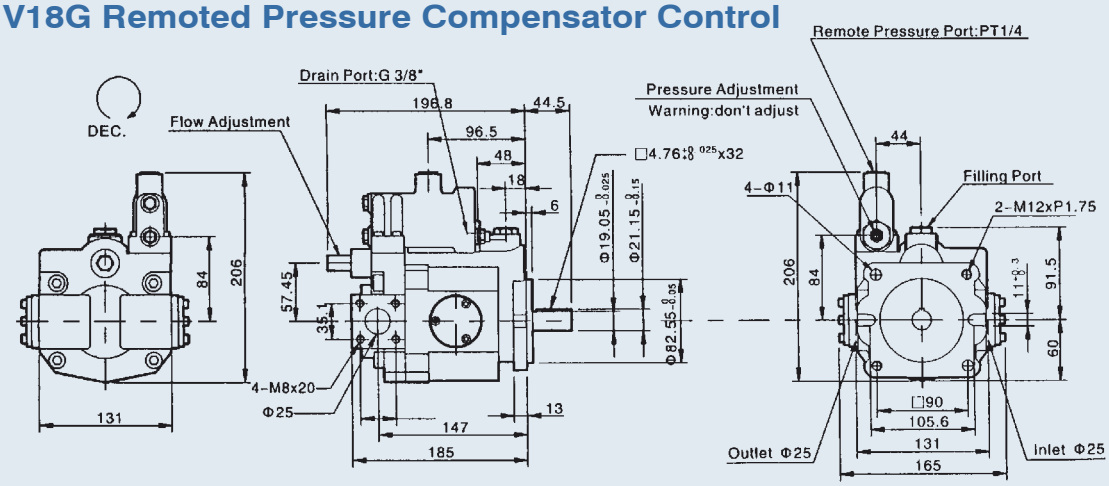

V SERIES AXIAL PISTON PUMP

Dimensions

V15GJ, V18GJ Proportional Pressure with Interface

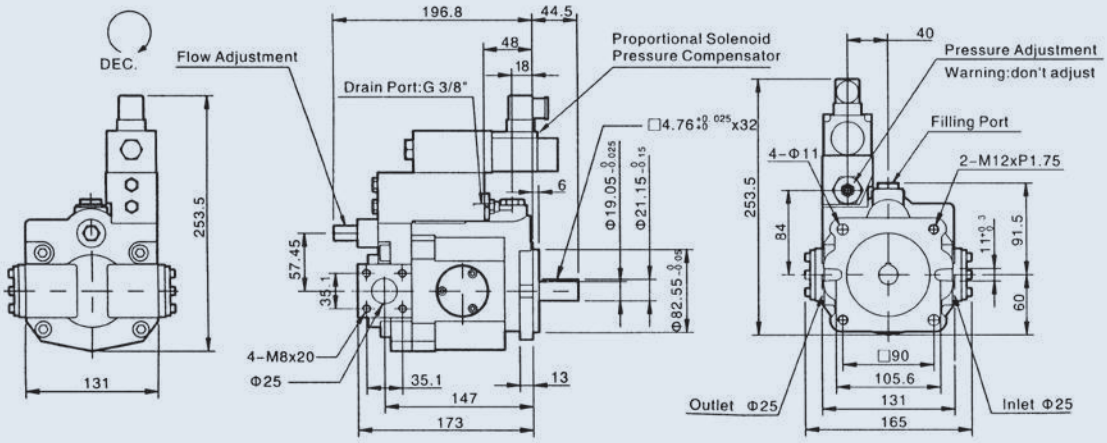

V15GM, V18GM Remote Interface (Not include valve)

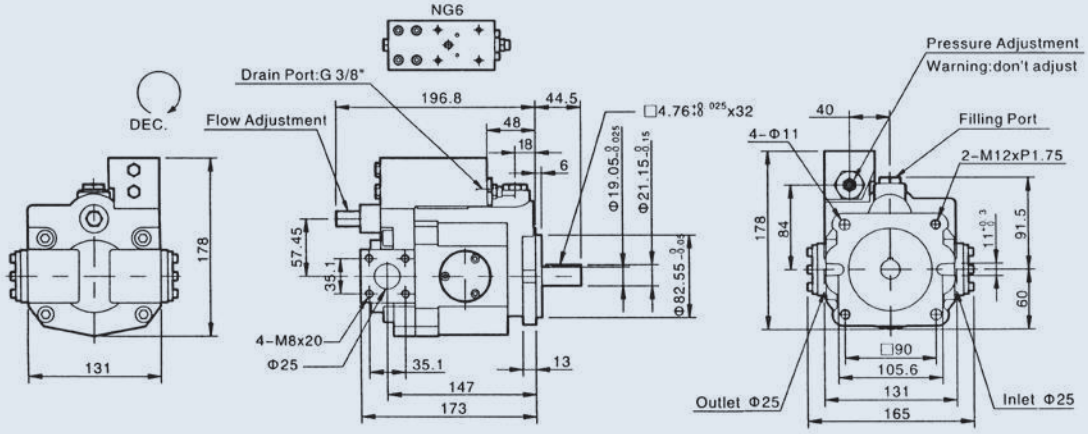

V15HL, V18HL Load-sensing Compensator

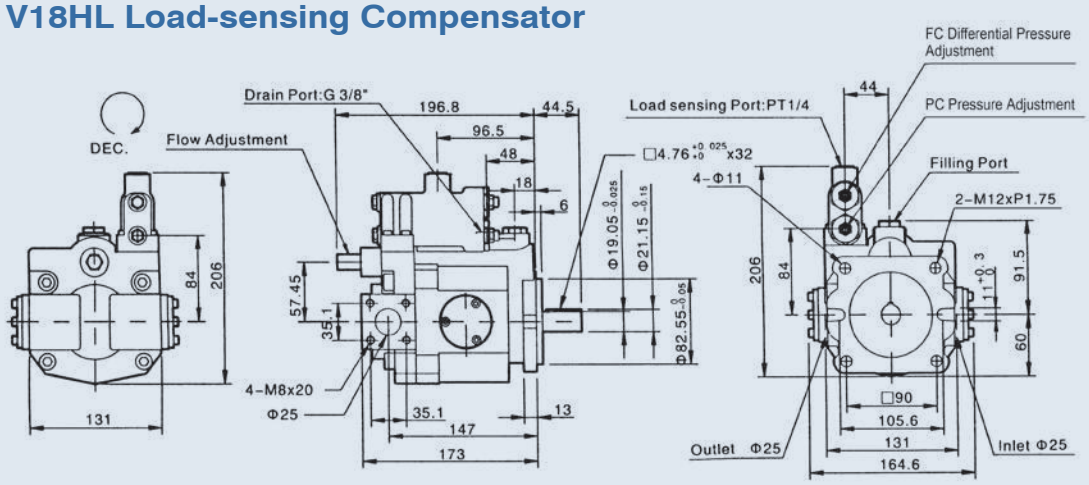

B

V SERIES AXIAL PISTON PUMP

Dimensions

V15HK, V18HK Proportional Electro-hydraulic Load Sensing Type

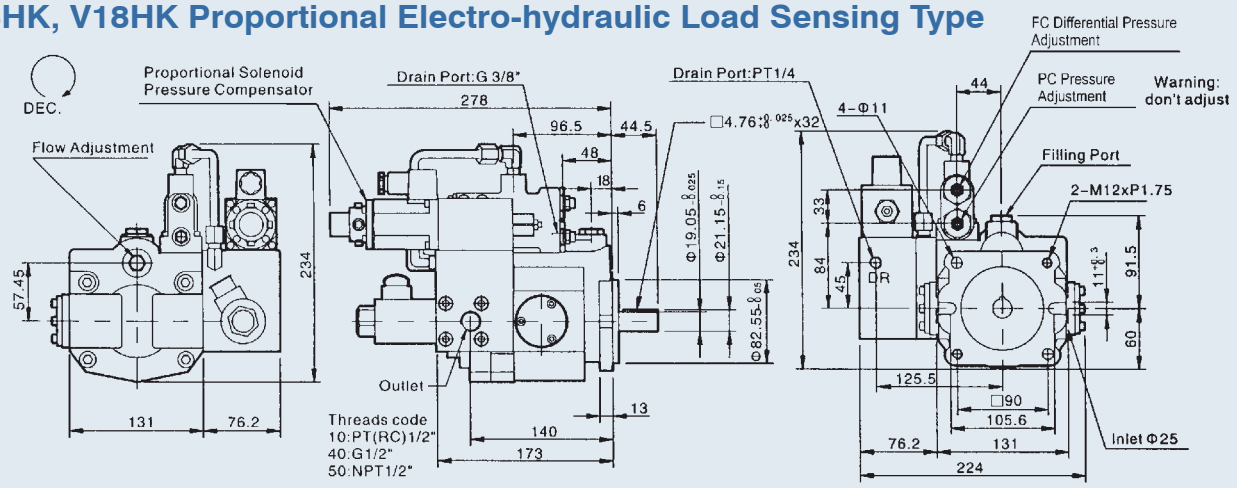

V15HQ, V18HQ Load-sensing Proportional Flow Control

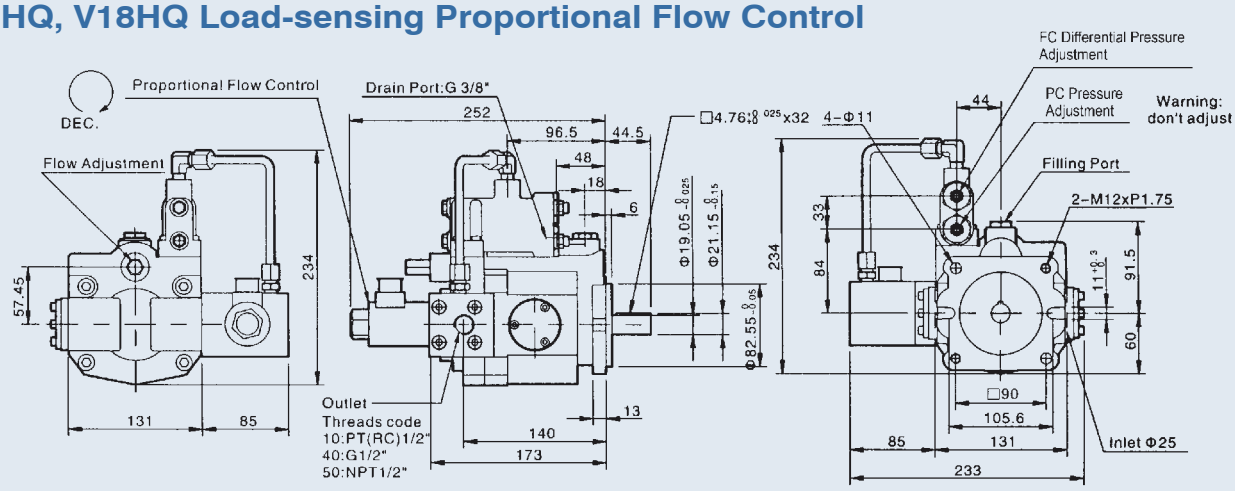

V15, V18 Splined Shaft Type

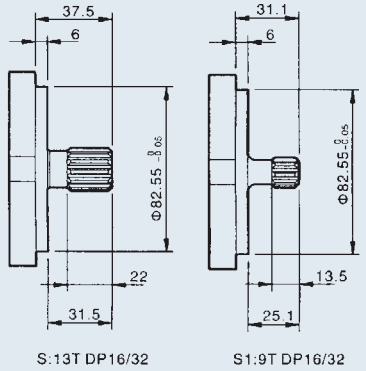

V15, V18 Hydraulic Flange

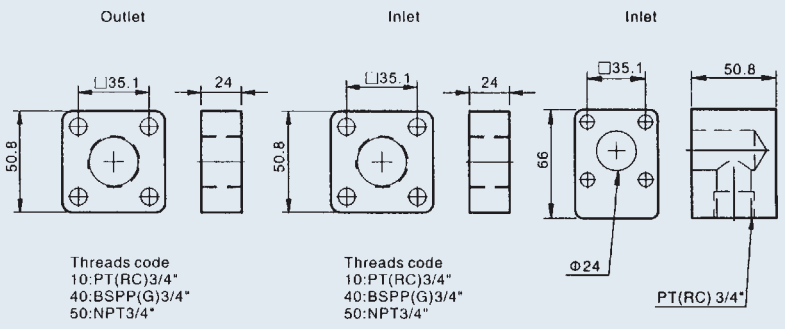

Dimensions

V15, V18 Prepared for Thru Drive (SAE AAø50.8)

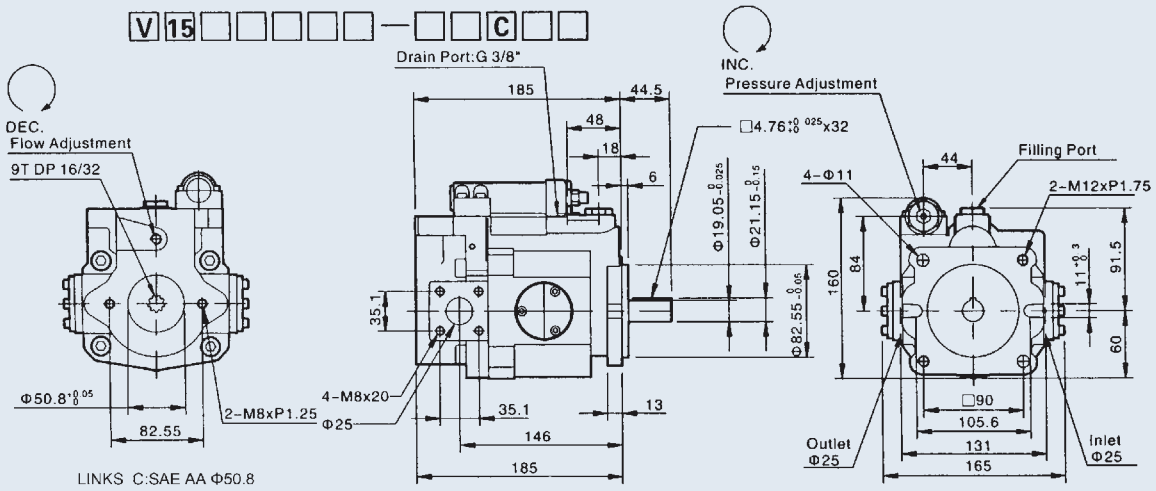

Type	A	B	C	CG	D	DG	E	EG	F	FG	G	GJ	GM	HL	HK	HQ
	O				O	O	O	O			O	O	O	O	O	O

Thru Drive Option

V15, V18 Prepared for Thru Drive (SAE Aø82.55)

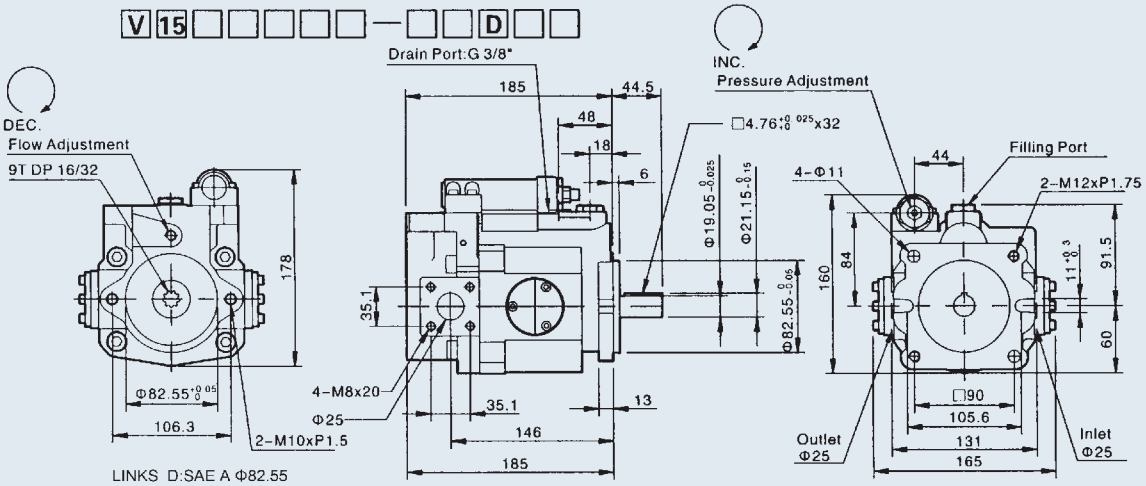

Type	A	B	C	CG	D	DG	E	EG	F	FG	G	GJ	GM	HL	HK	HQ
	O				O	O	O	O			O	O	O	O	O	O

Thru Drive Option

V SERIES AXIAL PISTON PUMP

Dimensions

V23A, V25A Pressure Compensator

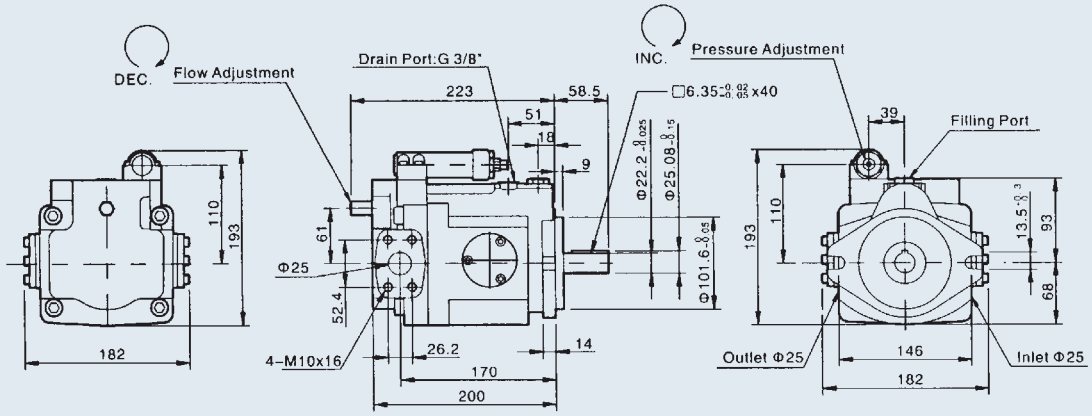

V23B, V25B Multi-stage Flow & Single-stage Pressure Compensator Control (With Cylinder)

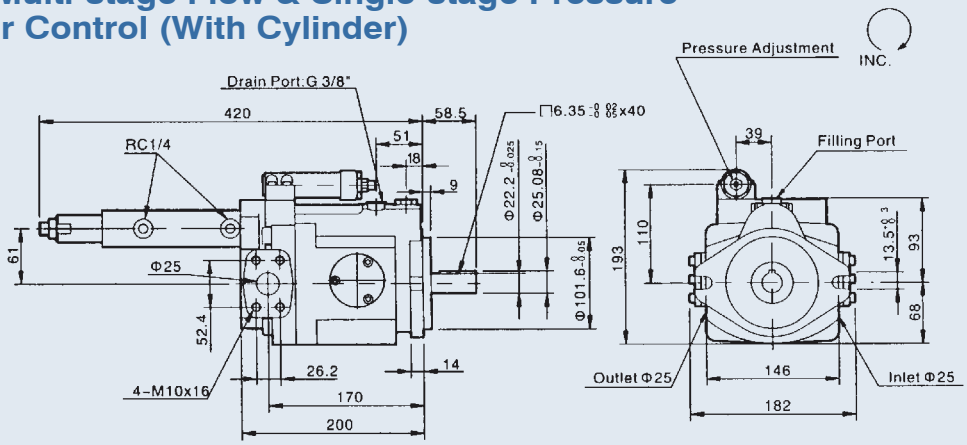

V23C, V25C 2-stage Pressure & Flow Control Type

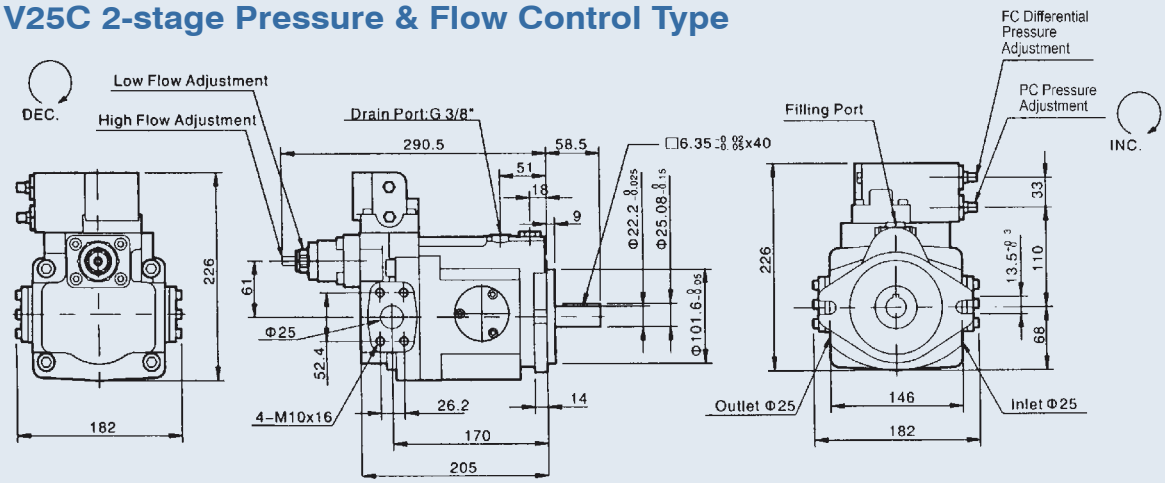

V SERIES AXIAL PISTON PUMP

Dimensions

V23CG, V25CG 2-stage Pressure & Flow Control Type with Remote

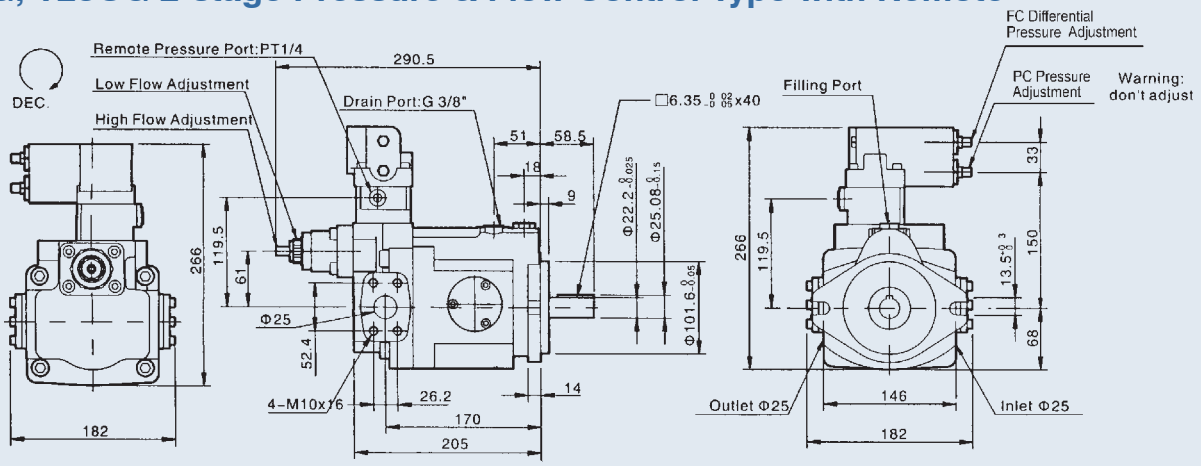

V23D, V25D Solenoid Controlled Pressure Compensating Type with Unloading Device

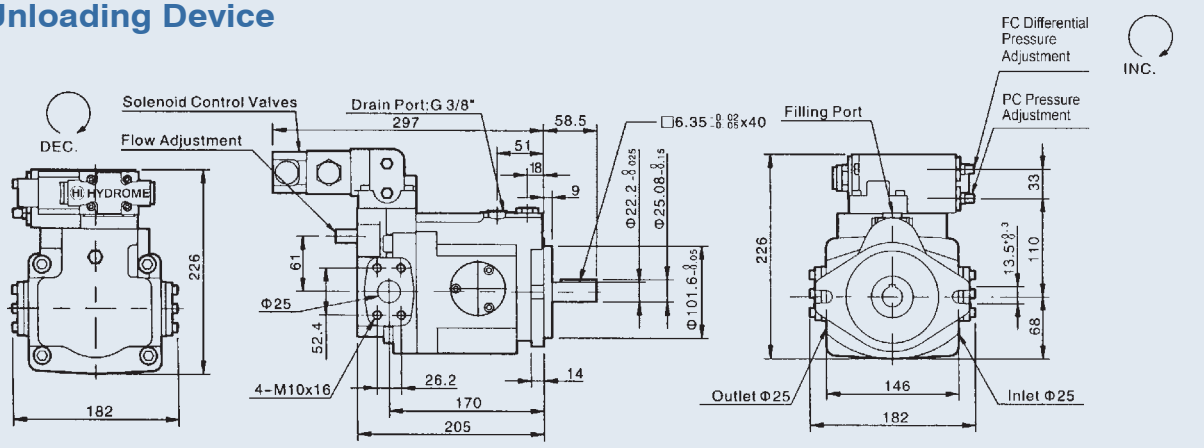

V23DG, V25DG Solenoid Controlled Pressure Compensating Type with Unloading Device & Remote

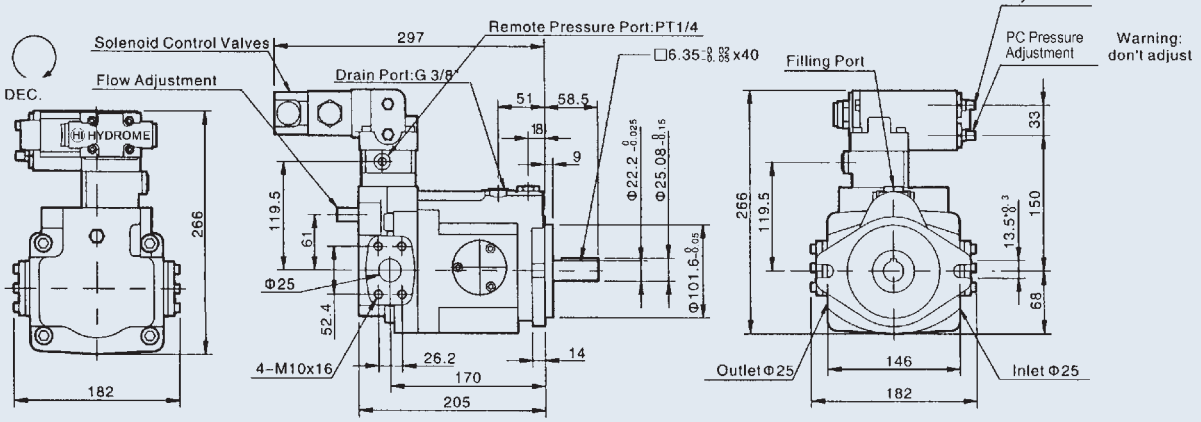

B

V SERIES AXIAL PISTON PUMP

Dimensions

V23E, V25E Dual Pressure Control

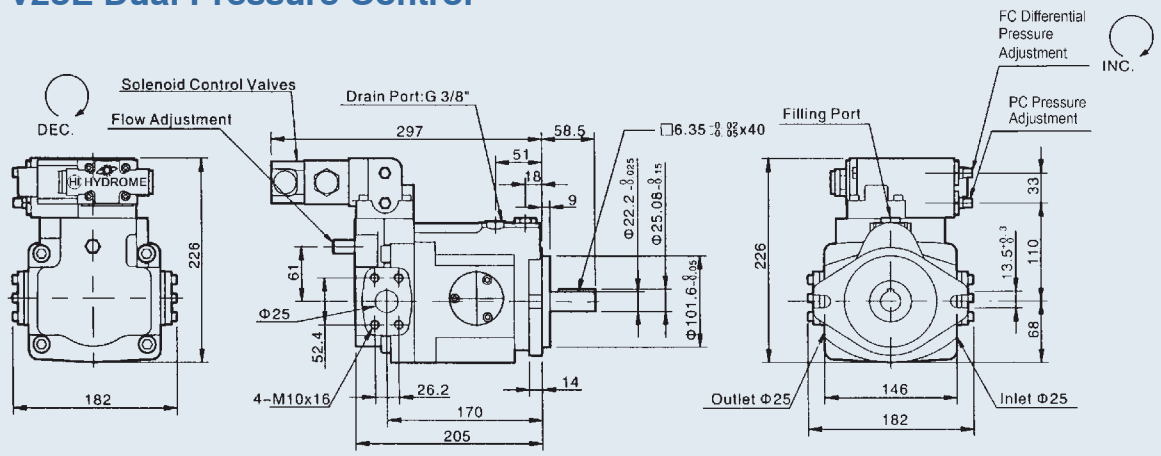

V23EG, V25EG Dual & Remote Pressure Control

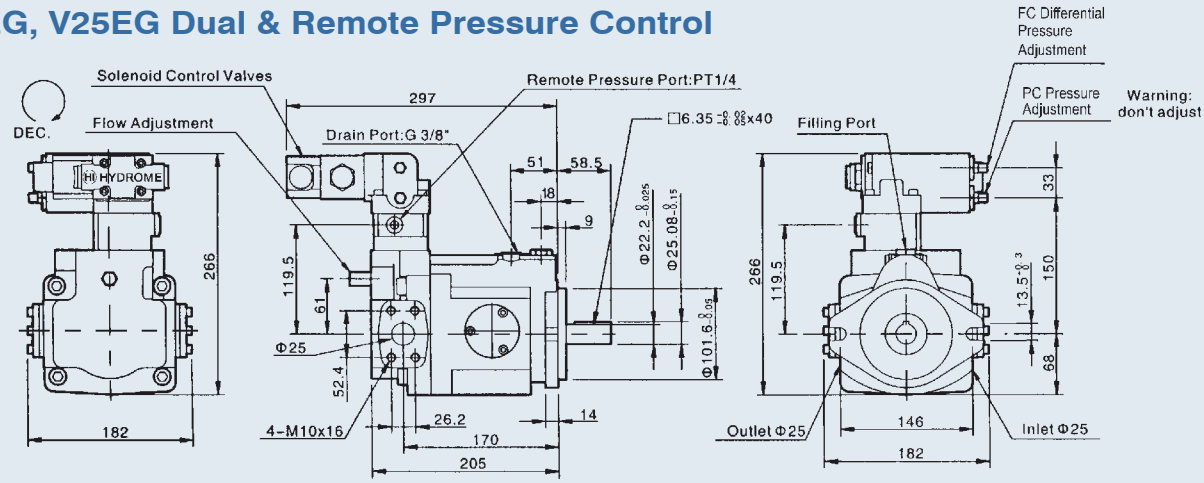

V23F, V25F 2 Flow-2 Pressure Control by Solenoid Operated Valve

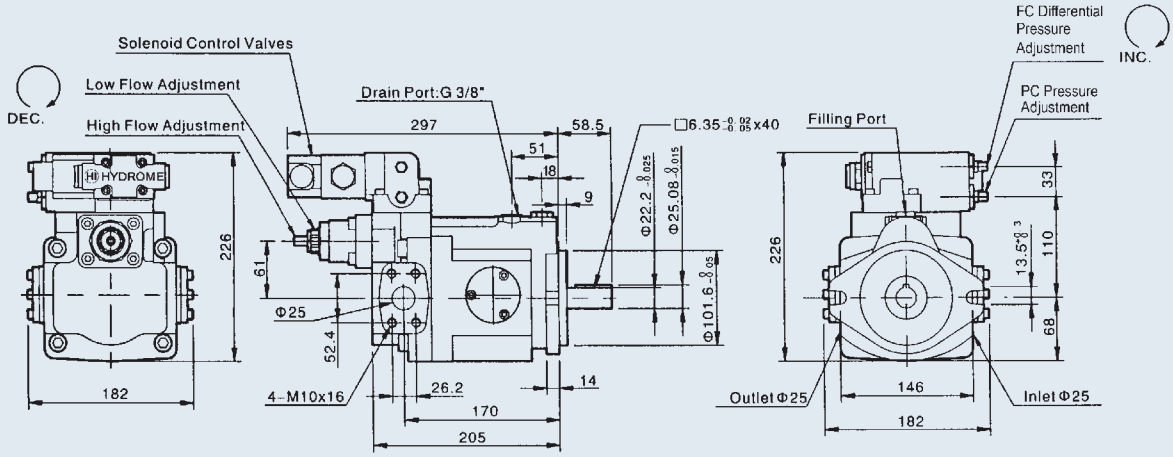

V SERIES AXIAL PISTON PUMP

Dimensions

V23FG, V25FG 2 Flow-2 Pressure Control by Solenoid Operated & Remote Valve

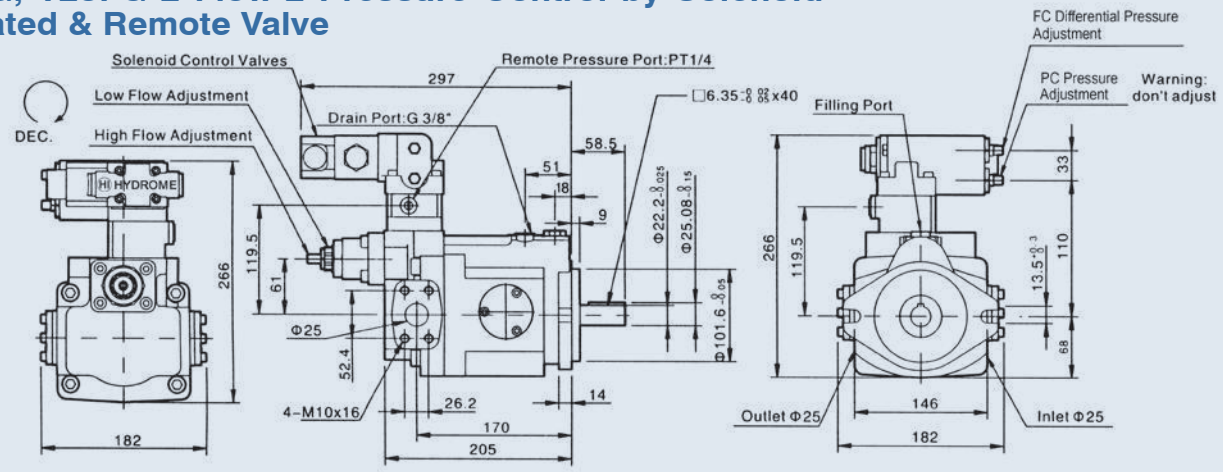

V23G, V25G Remoted Pressure Compensator Control

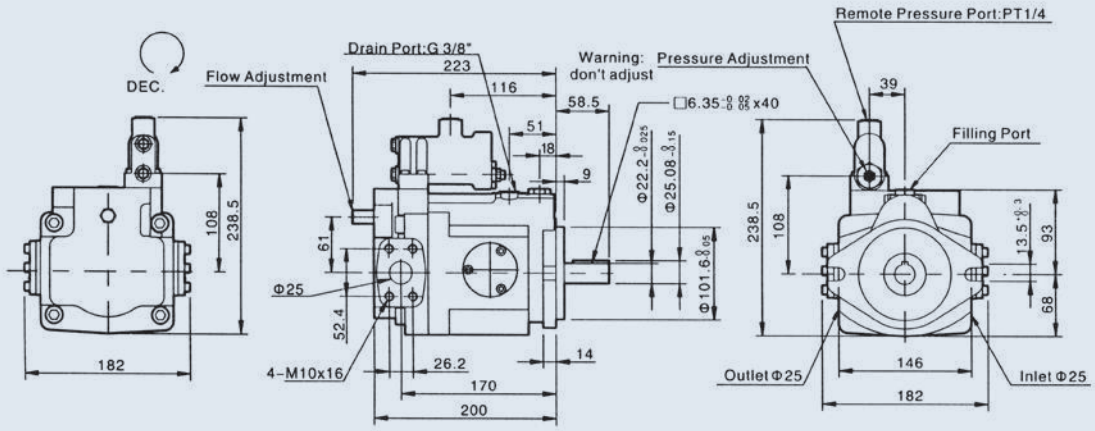

V23GJ, V25GJ Proportional Pressure with interface

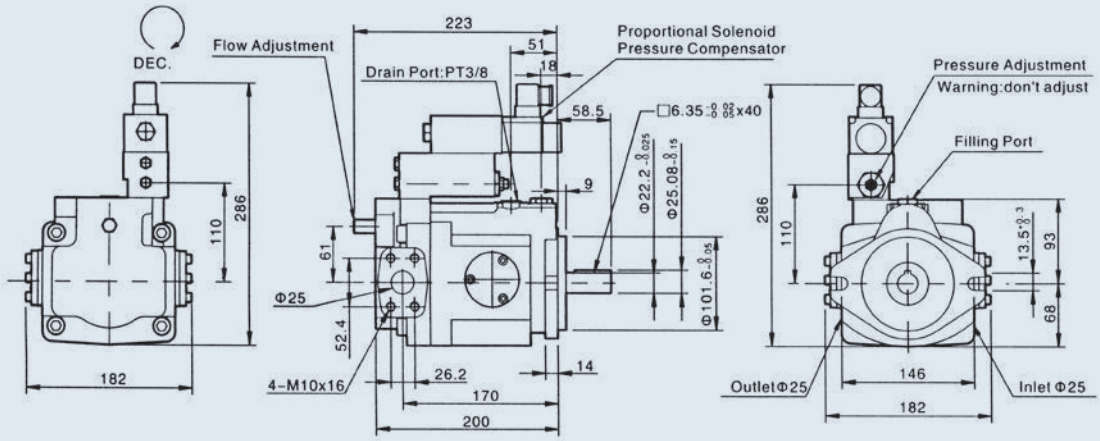

V SERIES AXIAL PISTON PUMP

Dimensions

V23GM, V25GM Remoted Interface (Not include valve)

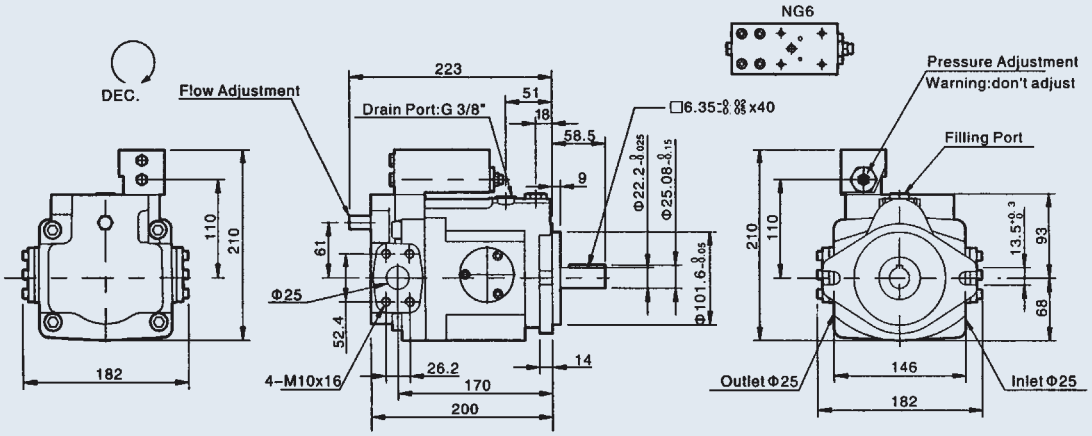

V23HL, V25HL Load-Sensing Compensator

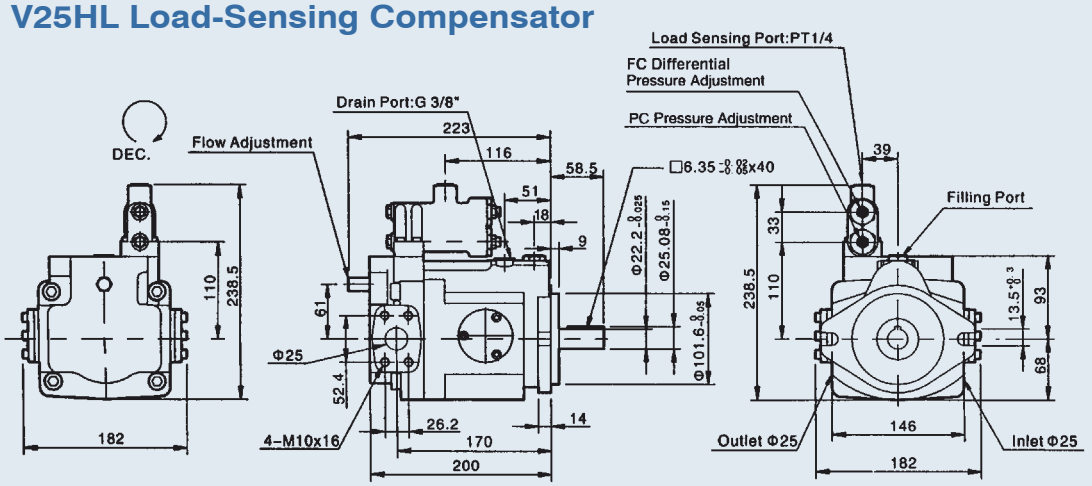

V23HK, V25HK Proportional Electro-hydraulic Load Sensing Type

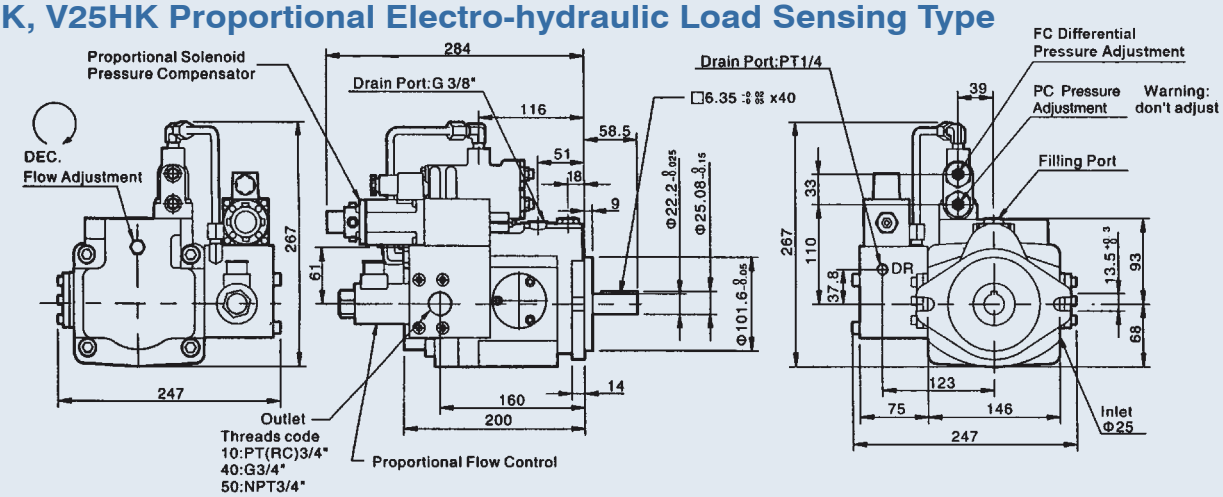

V SERIES AXIAL PISTON PUMP

Dimensions

V23HQ, V25HQ Load-Sensing Proportional Flow Control

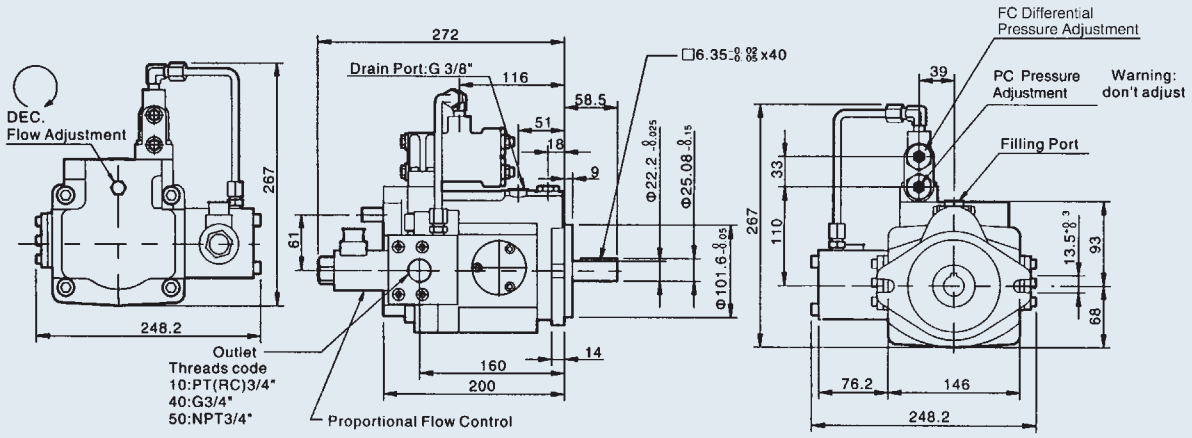

V23, V25 Prepared for Thru Drive (SAE Aø82.55)

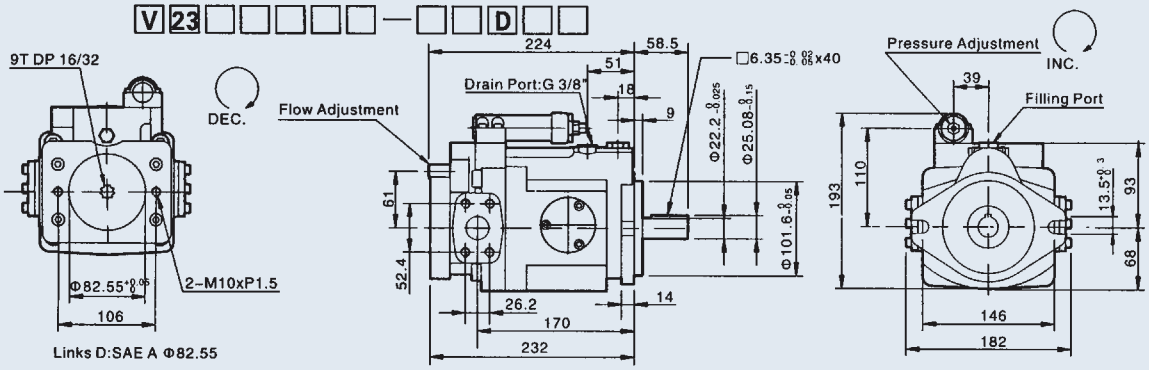

V23, V25 Prepared for Thru Drive (SAE Bø101.6)

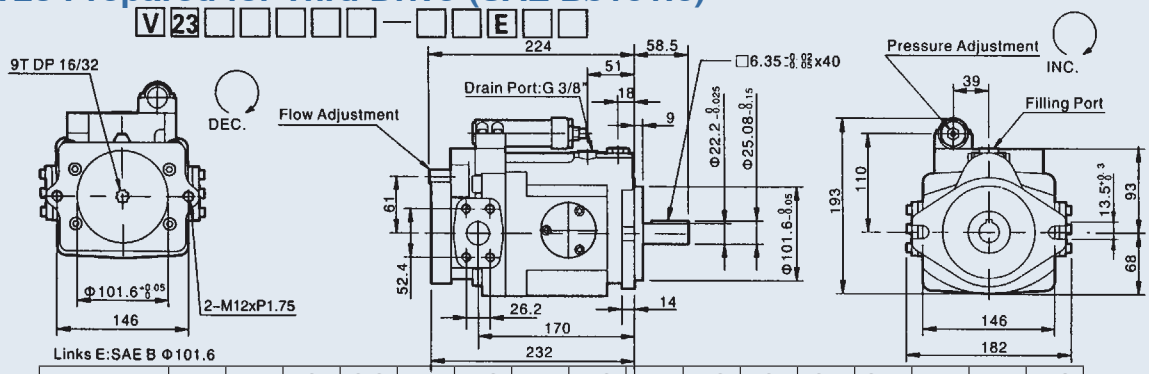

Type	A	B	C	CG	D	DG	E	EG	F	FG	G	GJ	GM	HL	HK	HQ
	O				O	O	O	O			O	O	O	O	O	O

Thru Drive Option

V SERIES AXIAL PISTON PUMP

Dimensions

V23, V25 Axial Port

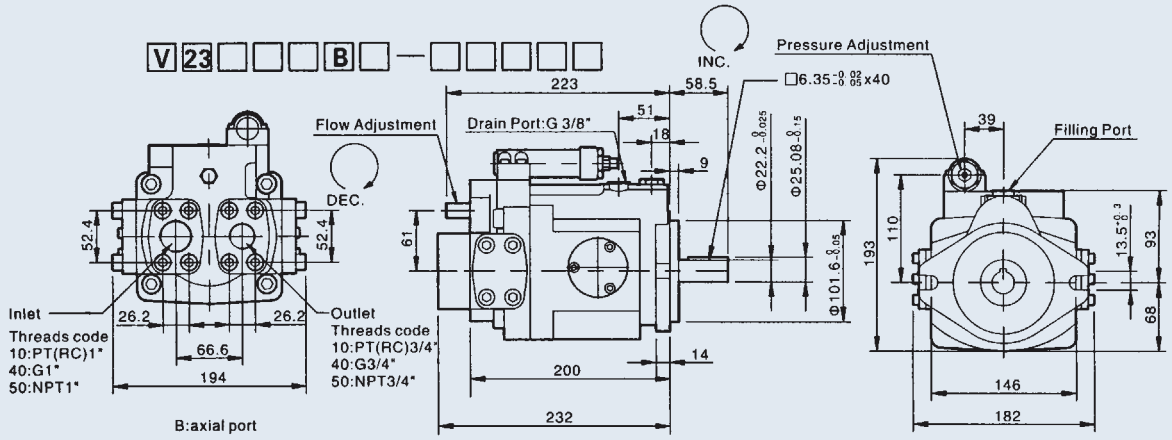

V23, V25 4 Connections for Axail Port

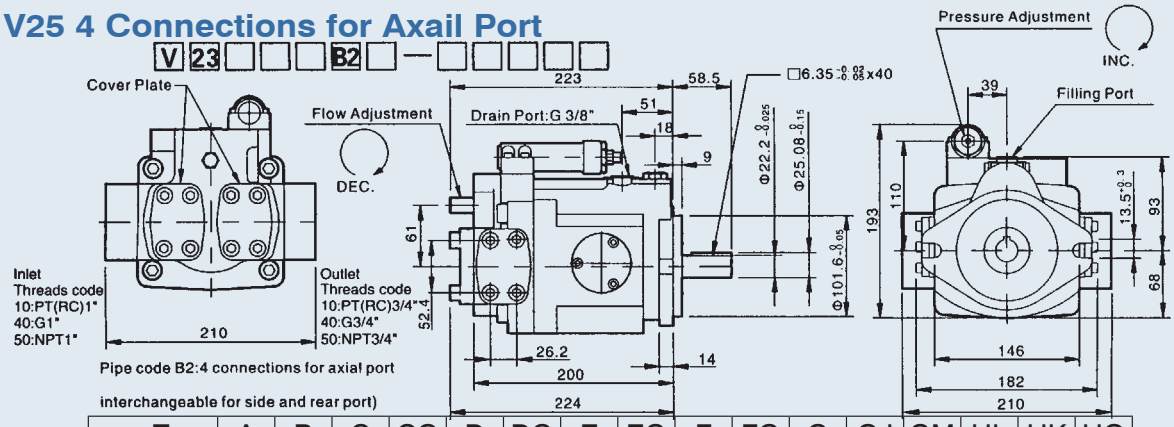

Type	A	B	C	CG	D	DG	E	EG	F	FG	G	GJ	GM	HL	HK	HQ
	O	O									O	O	O	O		

Axial Port Option

V23, V25 Splined Shaft Type

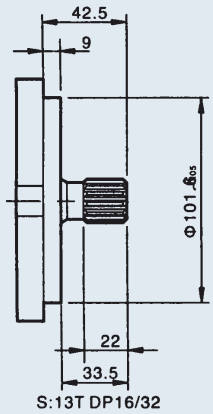

V23, V25 Hydraulic Flange

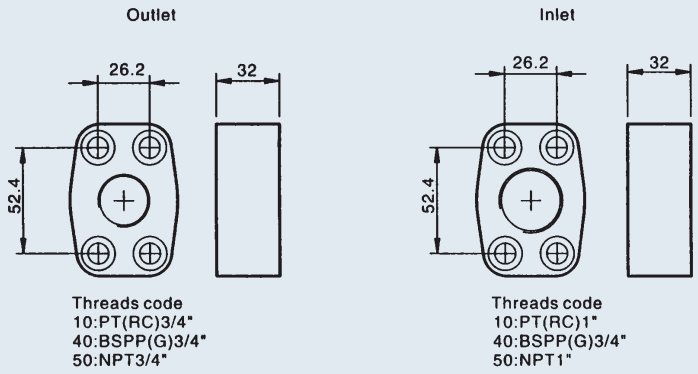

V SERIES AXIAL PISTON PUMP

Dimensions

V38A, V42A Pressure Compensator

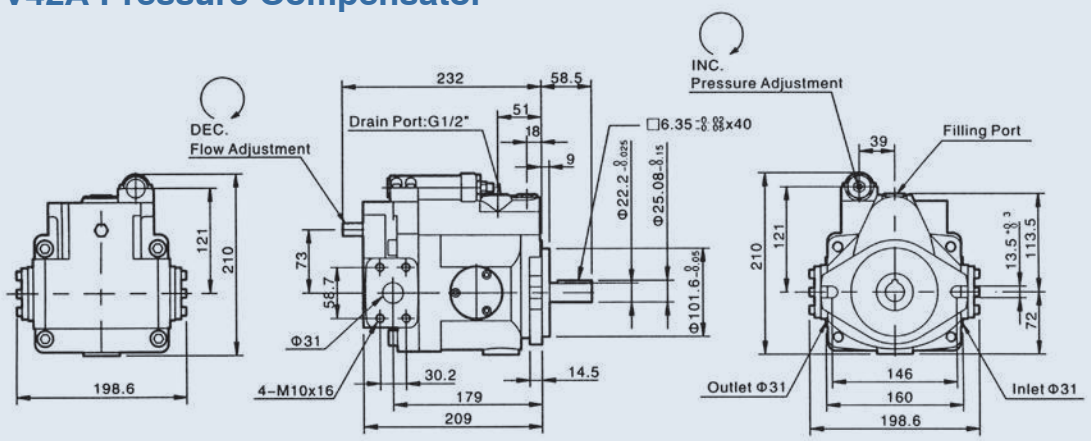

V38B, V42B Multi-stage Flow & Single-stage Pressure Compensator Control (With cylinder)

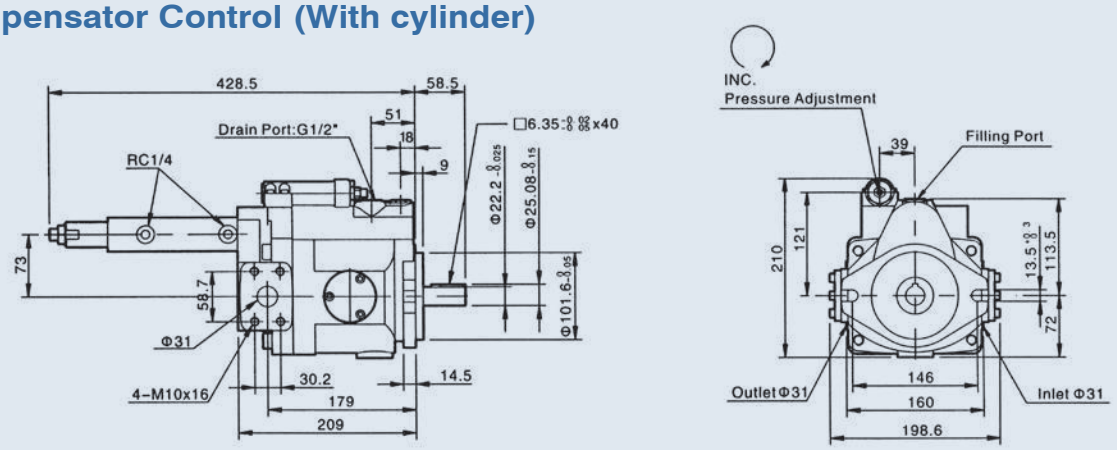

V38C, V42C 2-stage Pressure & Flow Control Type

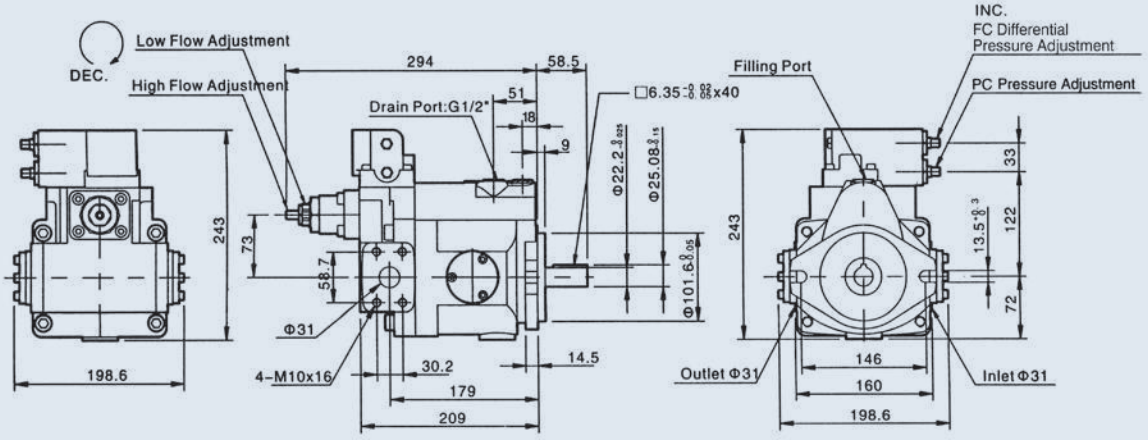

V SERIES AXIAL PISTON PUMP

Dimensions

V38CG, V42CG 2-stage Pressure & Flow Control Type with Remote

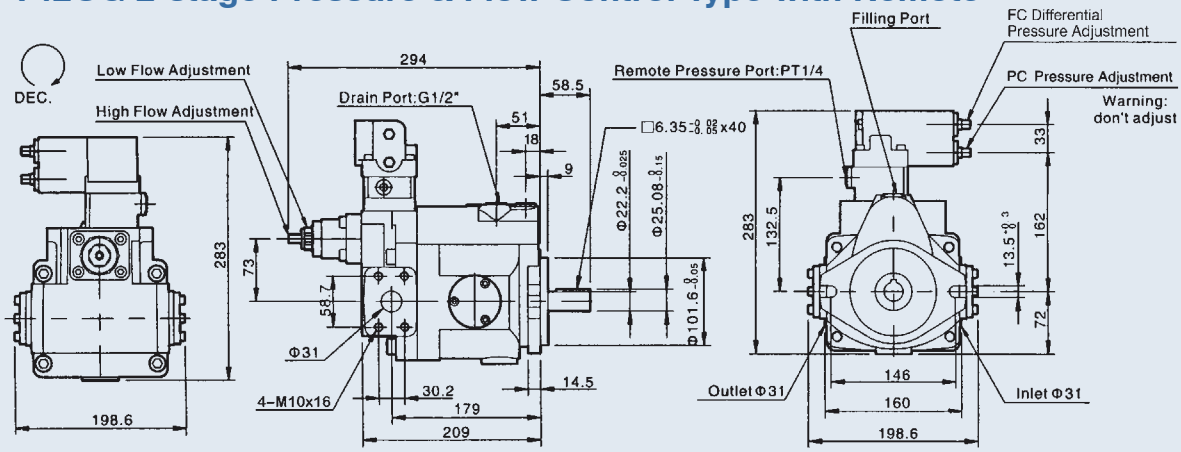

V38D, V42D Solenoid Controlled Pressure Compensating Type with Unloading Device

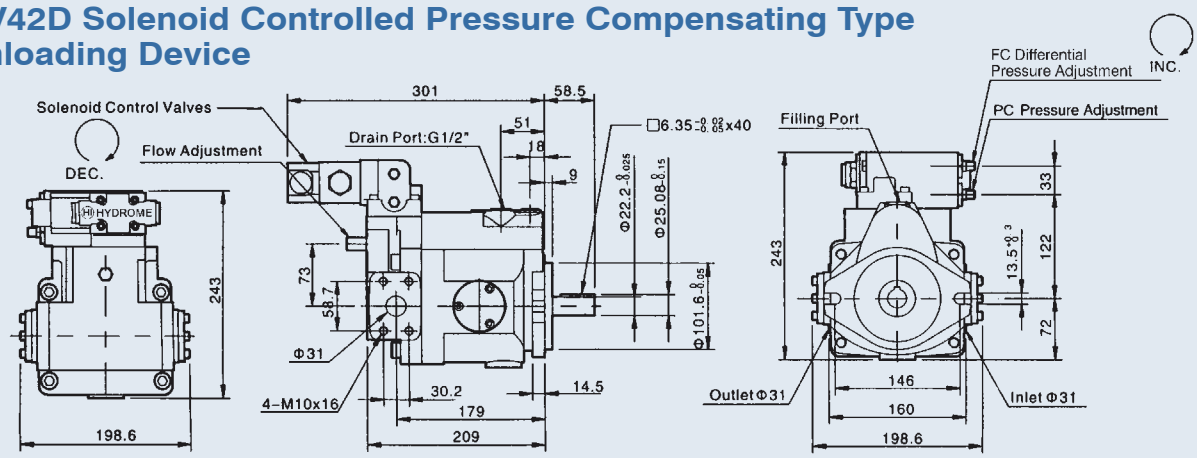

V38DG, V42DG Solenoid Controlled Pressure Compensating Type with Unloading Device & Remote

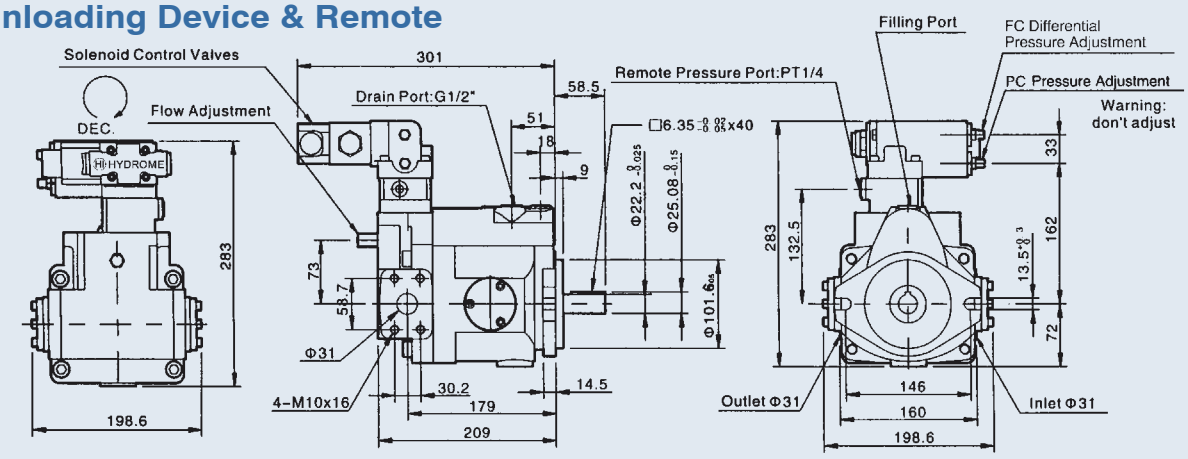

V SERIES AXIAL PISTON PUMP

Dimensions

V38E, V42E Dual Pressure Control

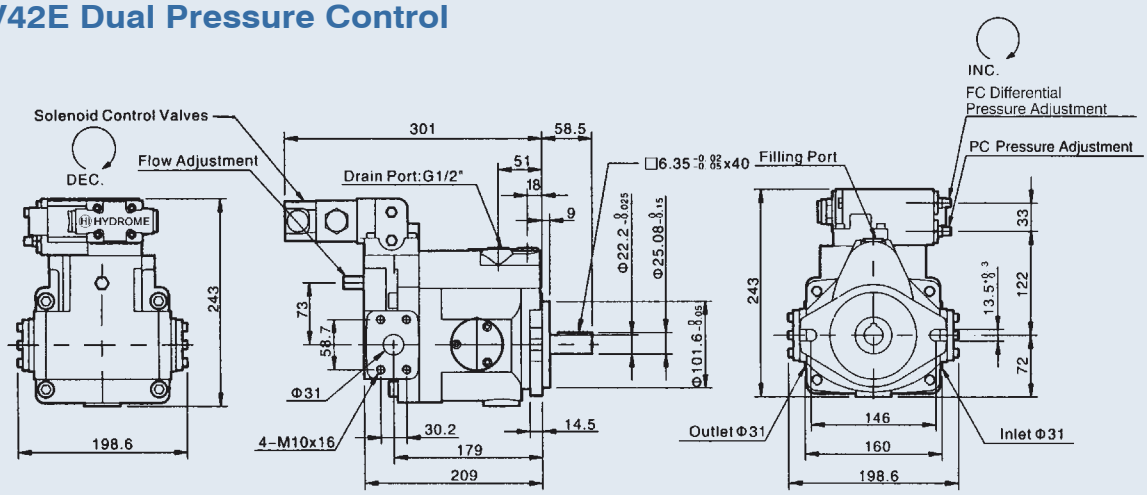

V38EG, V42EG Dual & Remote Pressure Control

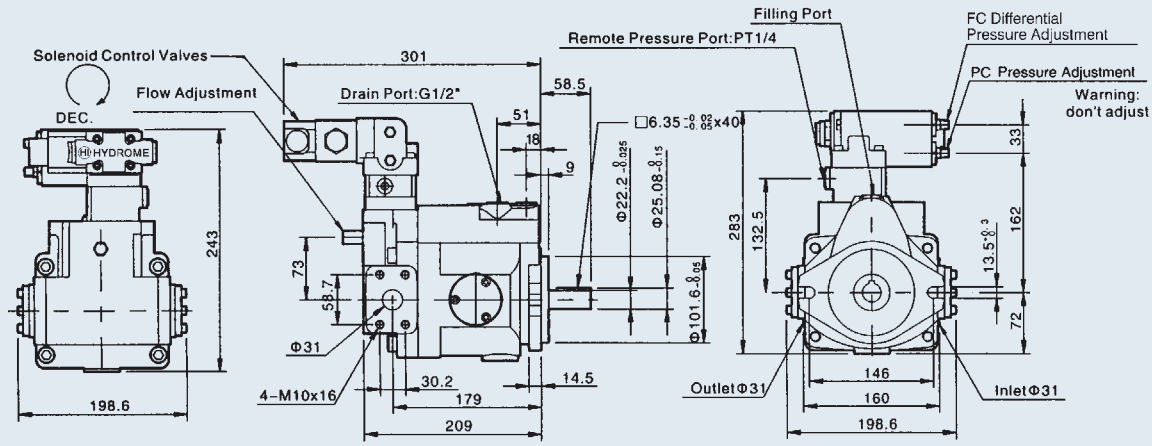

V38F, V42F Flow-2 Pressure Control by Solenoid Operated Valve

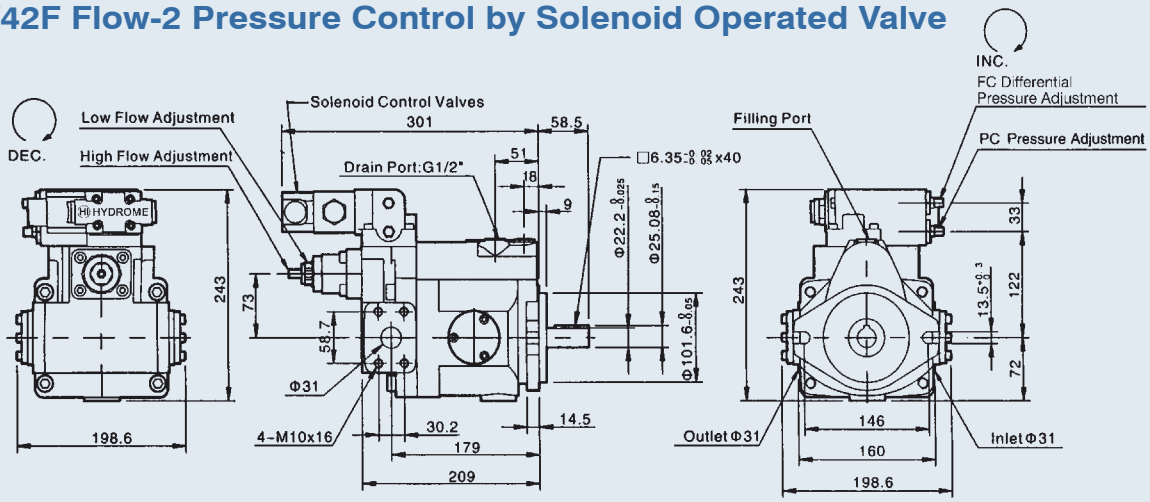

V SERIES AXIAL PISTON PUMP

Dimensions

V38FG, V42FG 2 Flow-2 Pressure Control by Solenoid Operated & Remote Valve

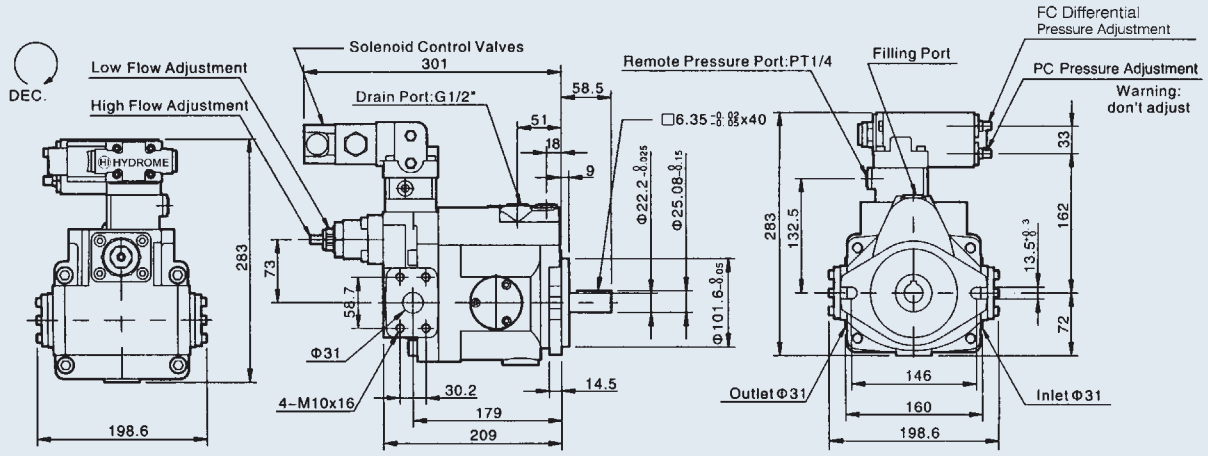

V38G, V42G Remoted Pressure Compensator Control

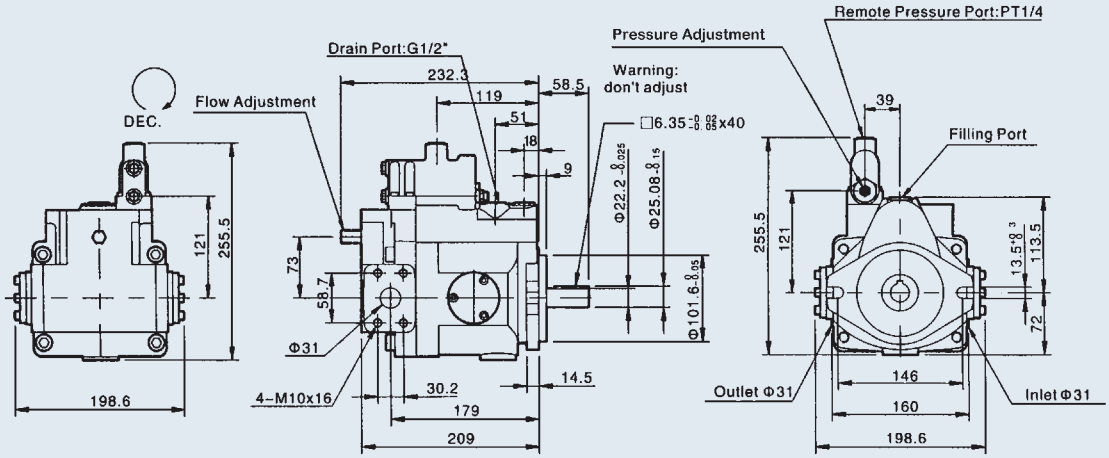

V38GJ, V42GJ Proportional Pressure with Interface

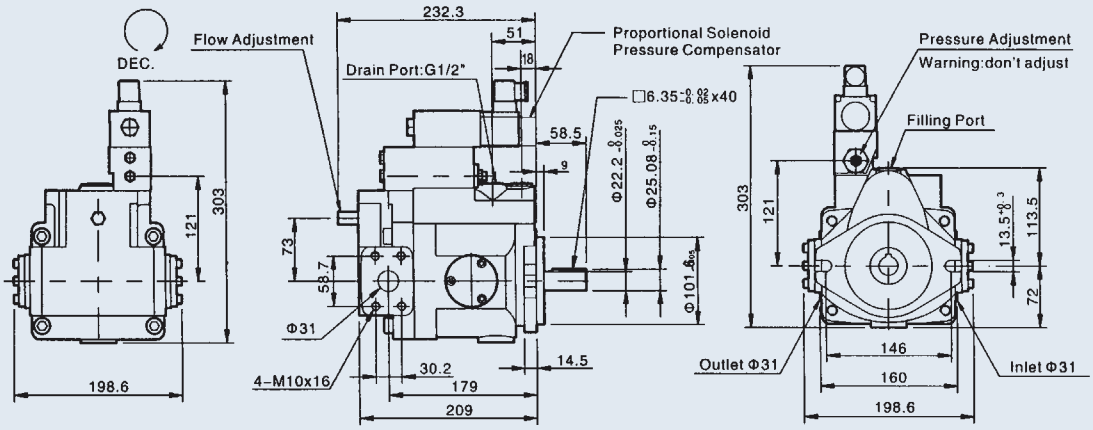

V SERIES AXIAL PISTON PUMP

Dimensions

V38GM, V42GM Remote Interface (Not include valve)

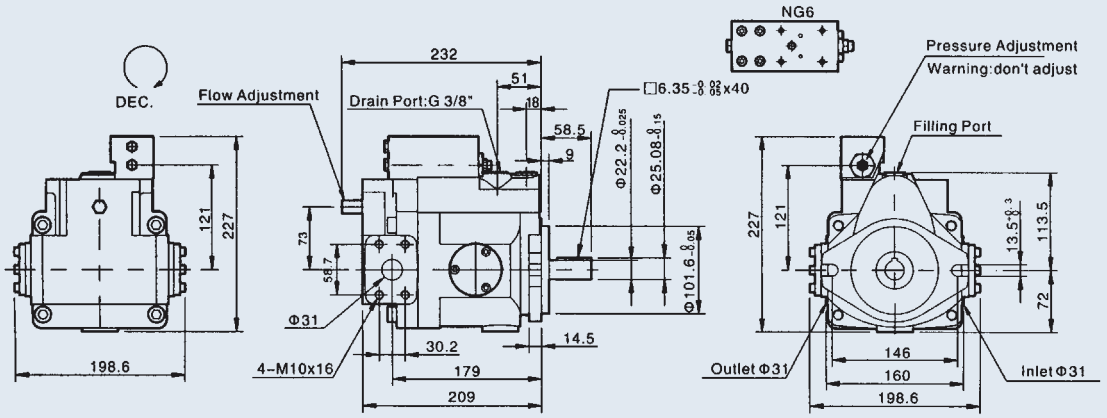

V38HL, V42HL Load-sensing Compensator

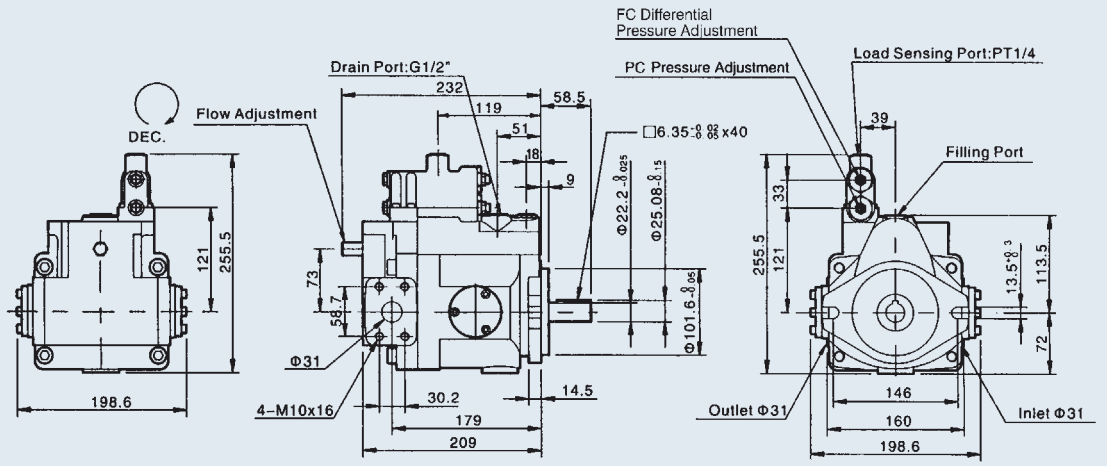

V38HK, V42HK Proportional Electro-hydraulic Load Sensing Type

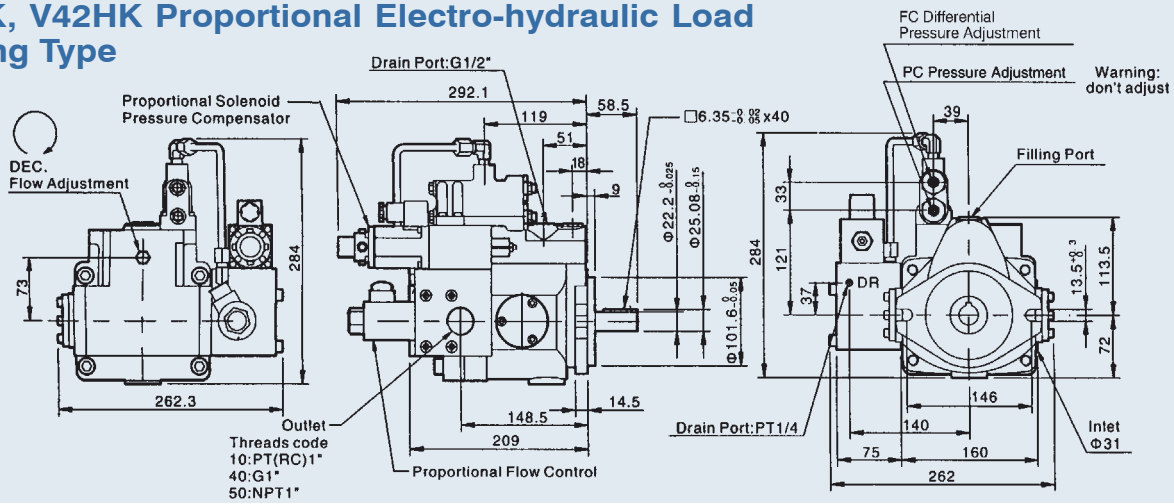

V SERIES AXIAL PISTON PUMP

Dimensions

V38HQ, V42HQ Load-sensing Proportional Flow Control

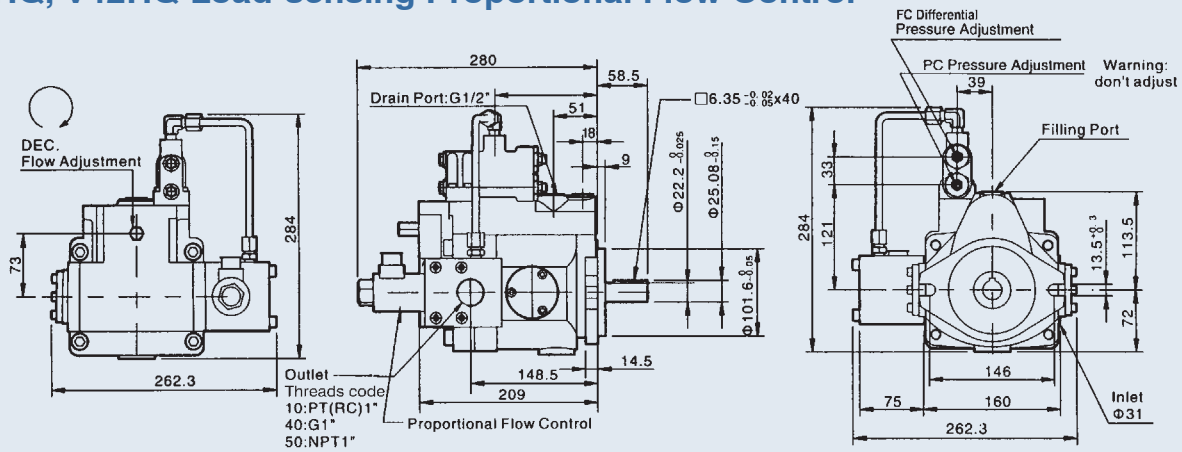

V38, V42 Prepared for Thru Drive (SAE Aø82.55)

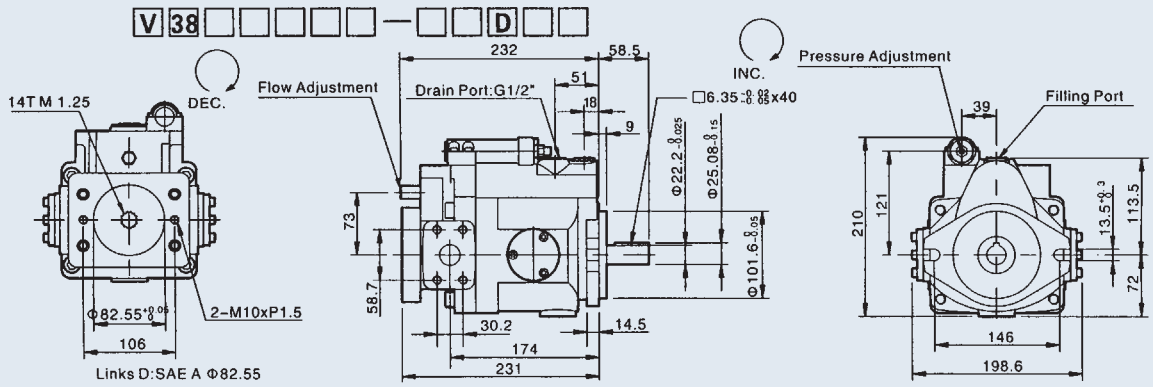

V38, V42 Prepared for Thru Drive (SAE Bø101.6)

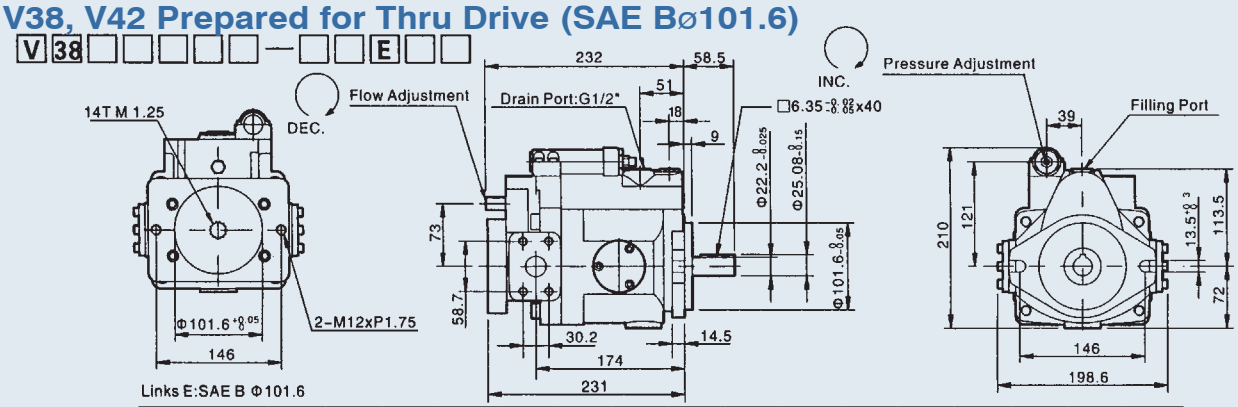

Type	A	B	C	CG	D	DG	E	EG	F	FG	G	GJ	GM	HL	HK	HQ
	O				O	O	O	O			O	O	O	O	O	O

Thru Drive Option

V SERIES AXIAL PISTON PUMP

Dimensions

V38, V42 Axial Port

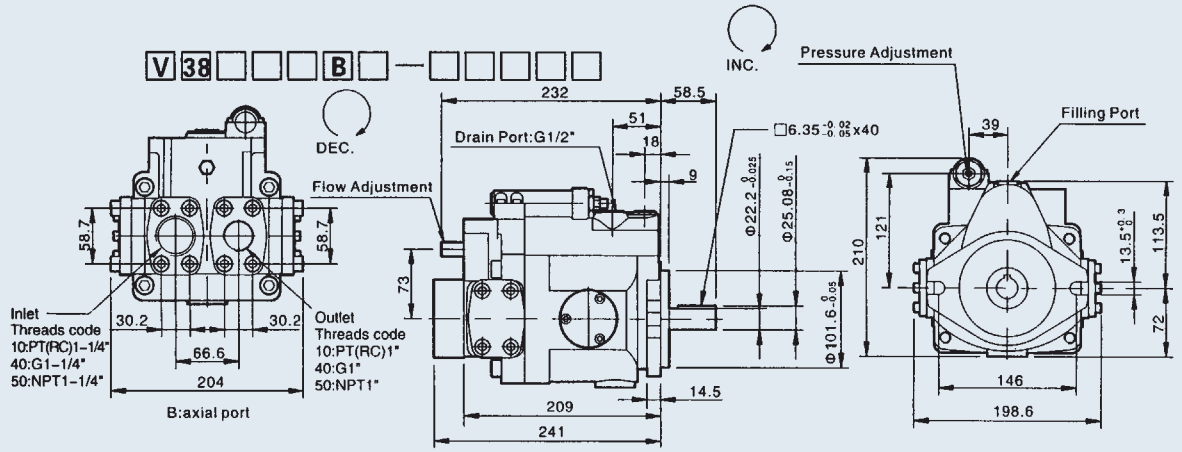

V38, V42 4 Connections for Axial Port

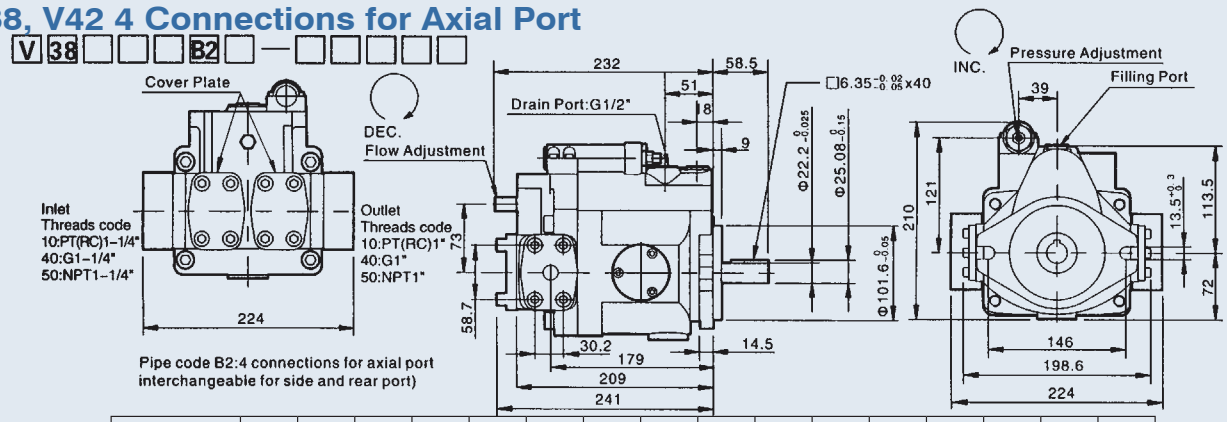

Type	A	B	C	CG	D	DG	E	EG	F	FG	G	GJ	GM	HL	HK	HQ
	O	O	O	O					O	O	O	O	O	O		

Axial Port Option

V38, V42 Splined Shaft Type

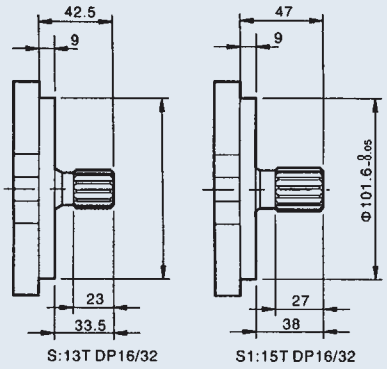

V38, V42 Hydraulic Flange

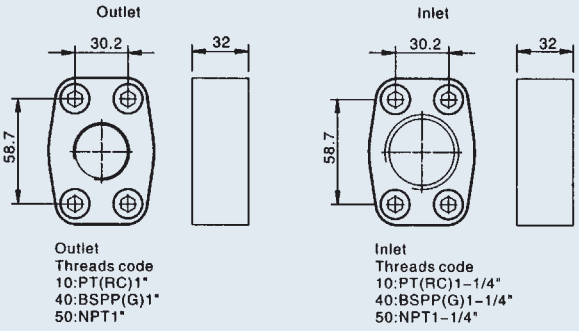

V SERIES AXIAL PISTON PUMP

Dimensions

V50A, V70A Pressure Compensator

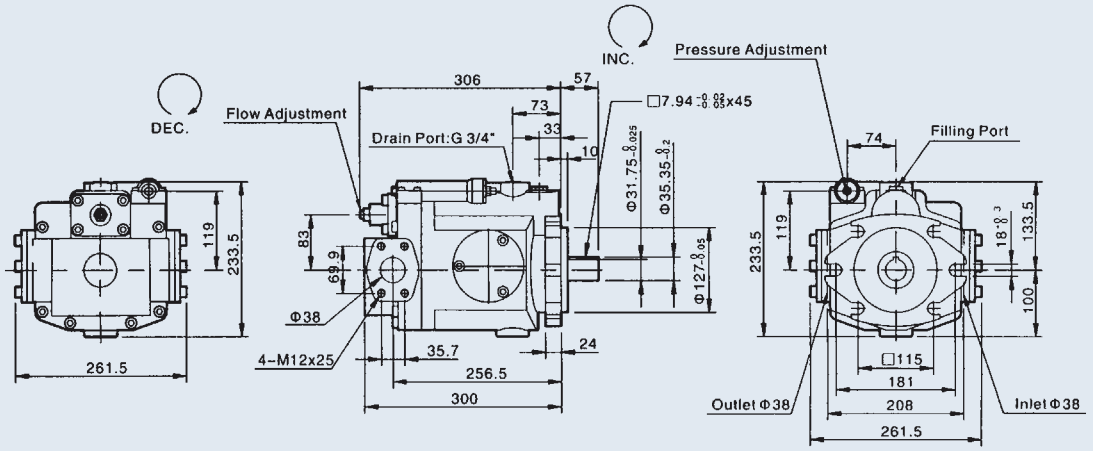

V50B, V70B Multi-stage Flow & Single-stage Pressure Compensator Control (With cylinder)

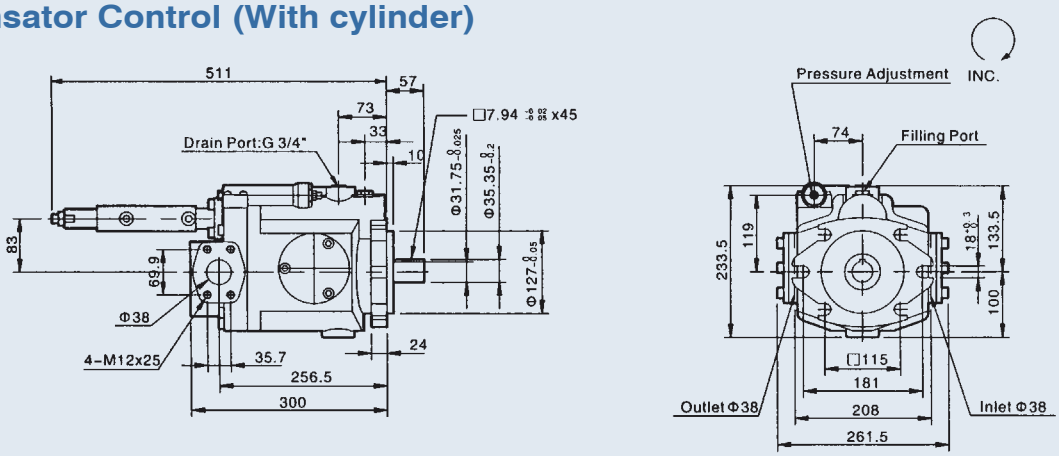

V50C, V70C 2-stage Pressure & Flow Control Type

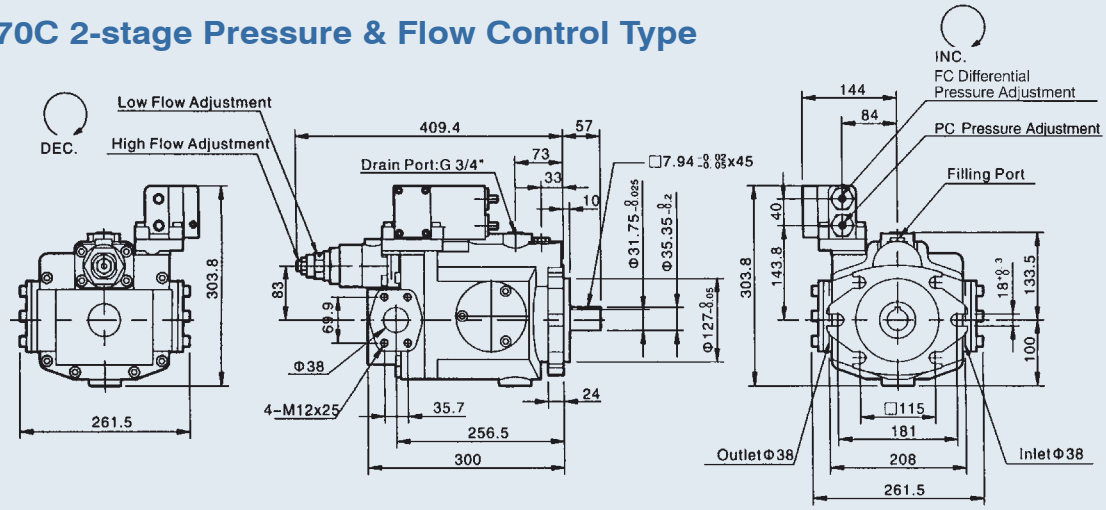

V SERIES AXIAL PISTON PUMP

Dimensions

V50D, V70D Solenoid Controlled Pressure Compensating Type with Unloading Device

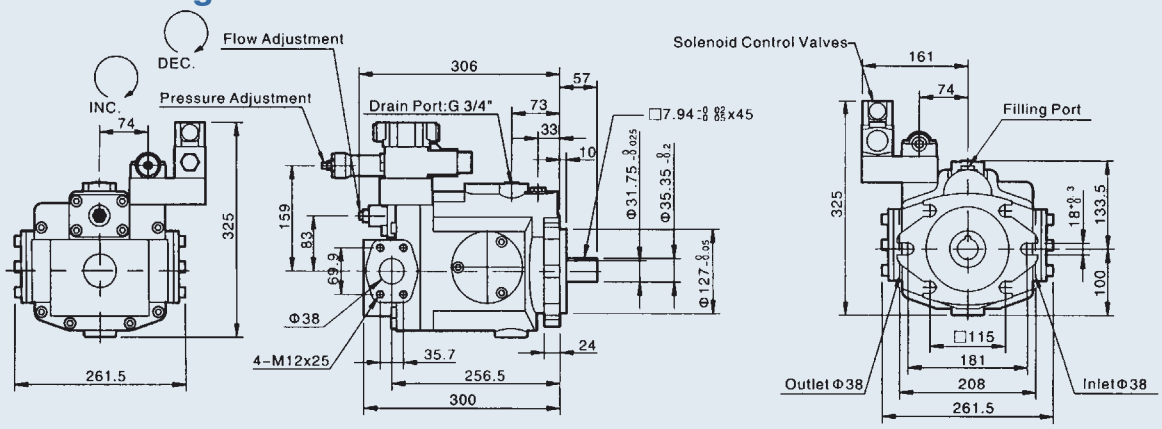

V50F, V70F 2 Flow-2 Pressure Control by Solenoid Operated Valve

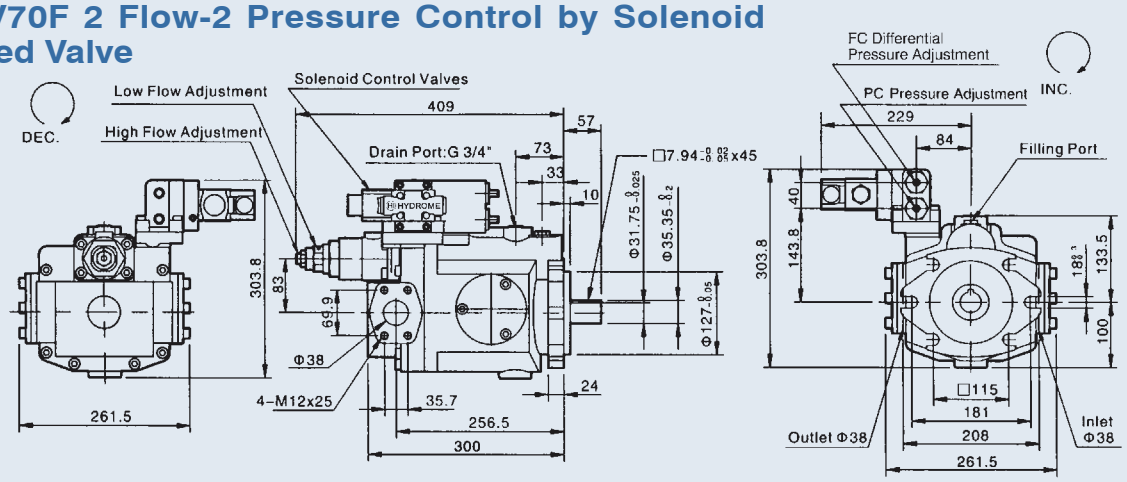

V50G, V70G Remoted Pressure Compensator Control

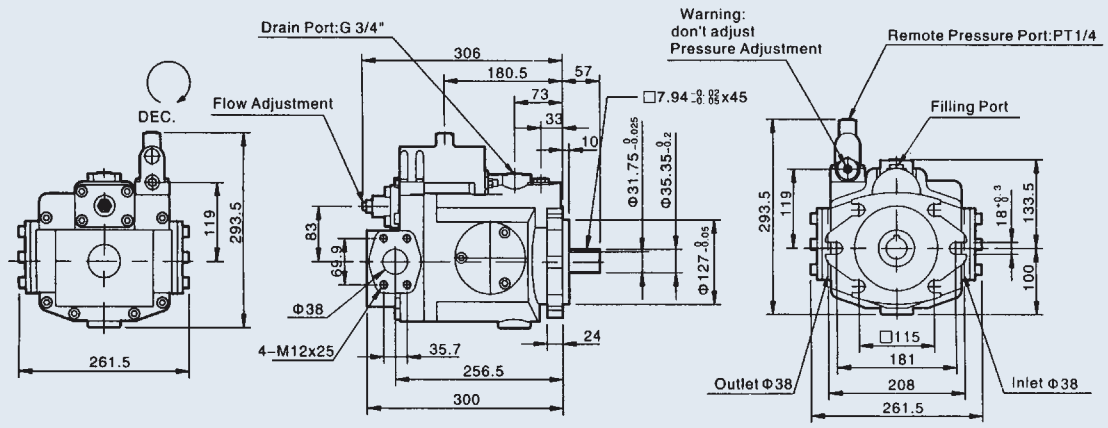

V SERIES AXIAL PISTON PUMP

Dimensions

V50GJ, V70GJ Proportional Pressure with interface

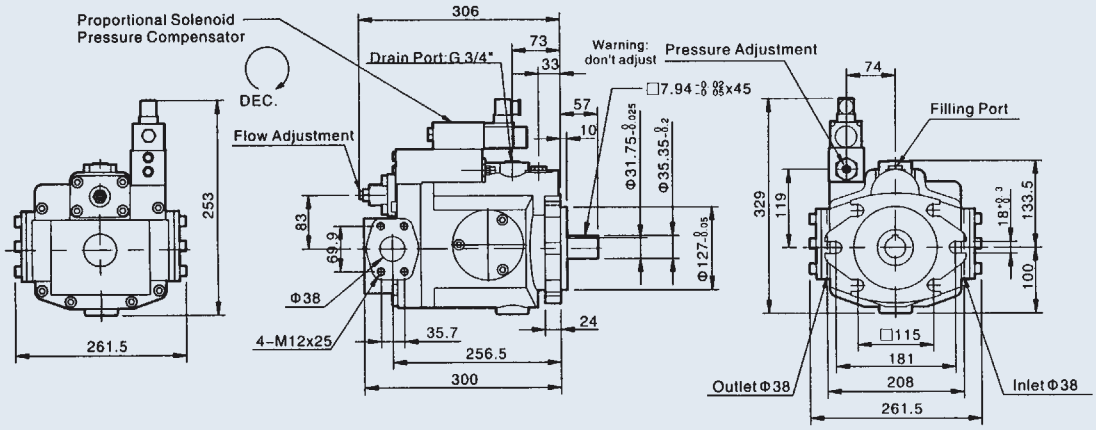

V50GM, V70GM Remote Interface (Not include valve)

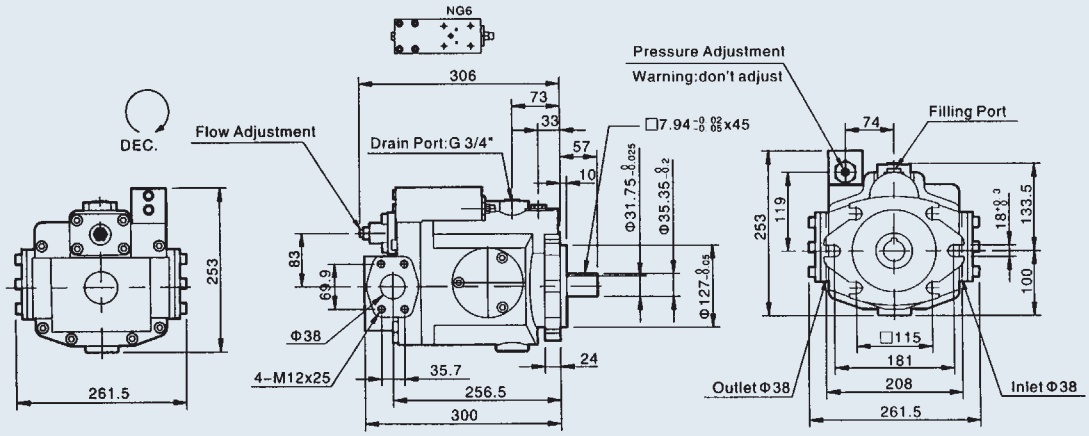

V50HL, V70HL Load-sensing Compensator

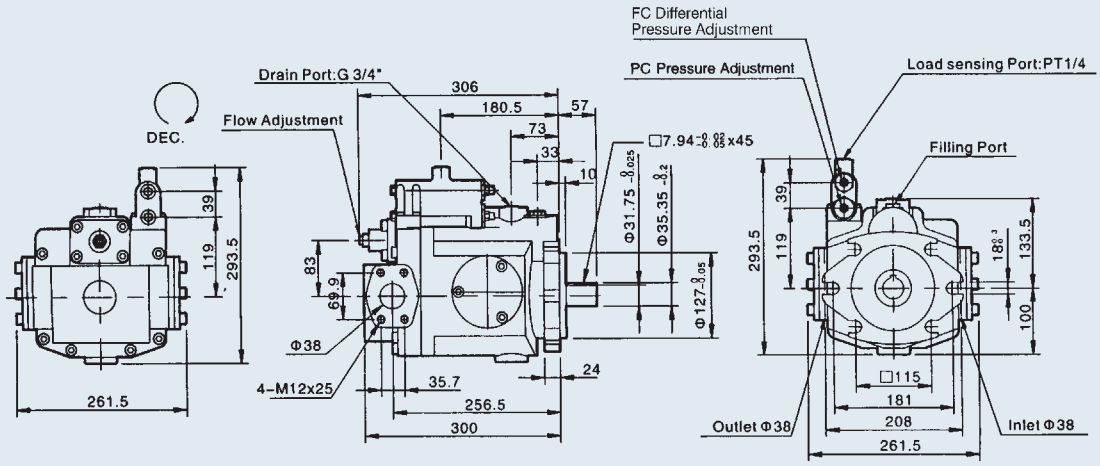

V SERIES AXIAL PISTON PUMP

Dimensions

V50HK, V70HK Proportional Electro-hydraulic Load Sensing Type

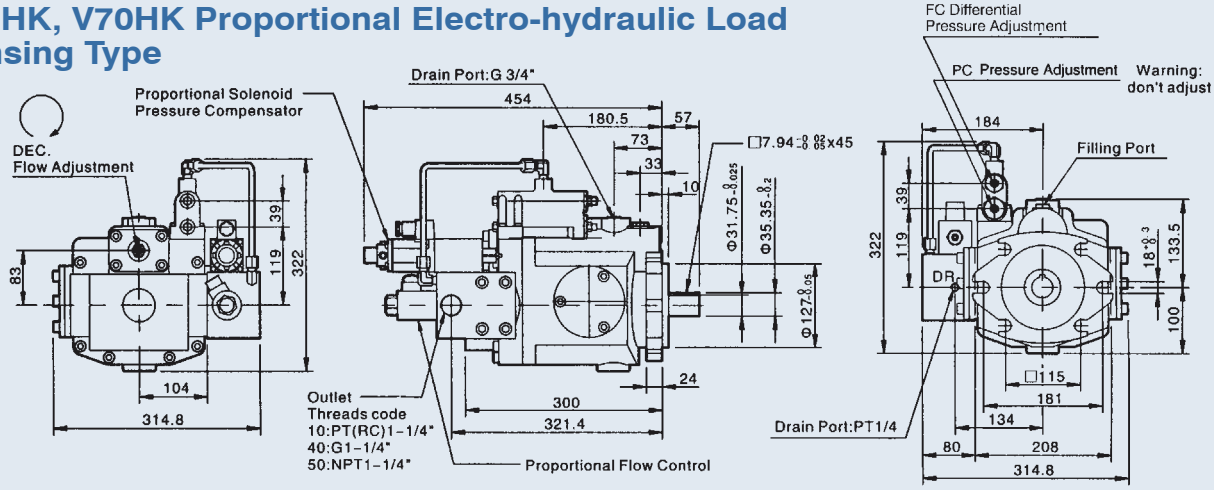

V50HQ, V70HQ Load-Sensing Proportional Flow Control

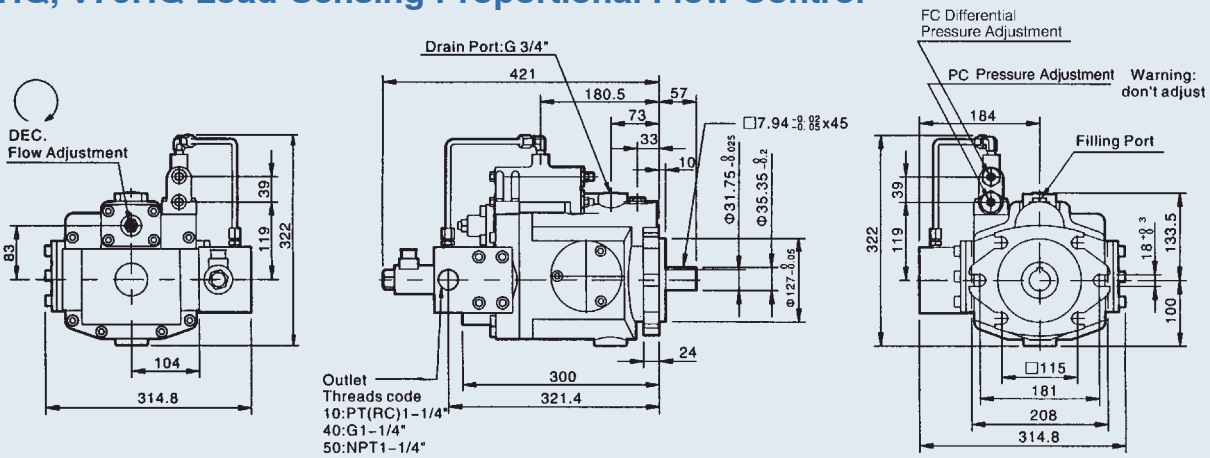

V50, V70 Splined Shaft Type

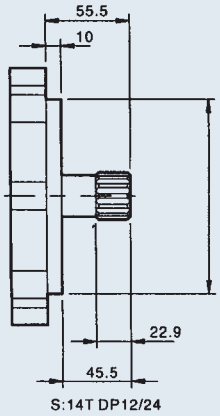

V50, V70 Hydraulic Flange

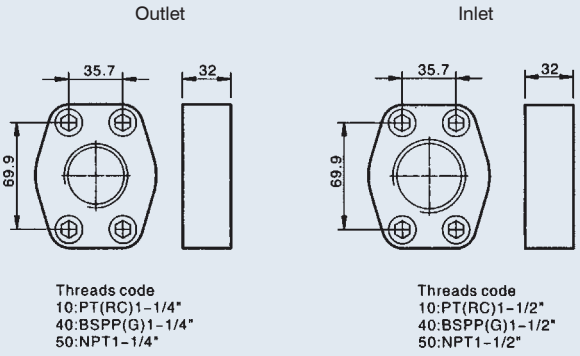

V SERIES AXIAL PISTON PUMP

Dimensions

V50, V70 Prepared for Thru Drive (SAE Aø82.55, SAE Bø101.6)

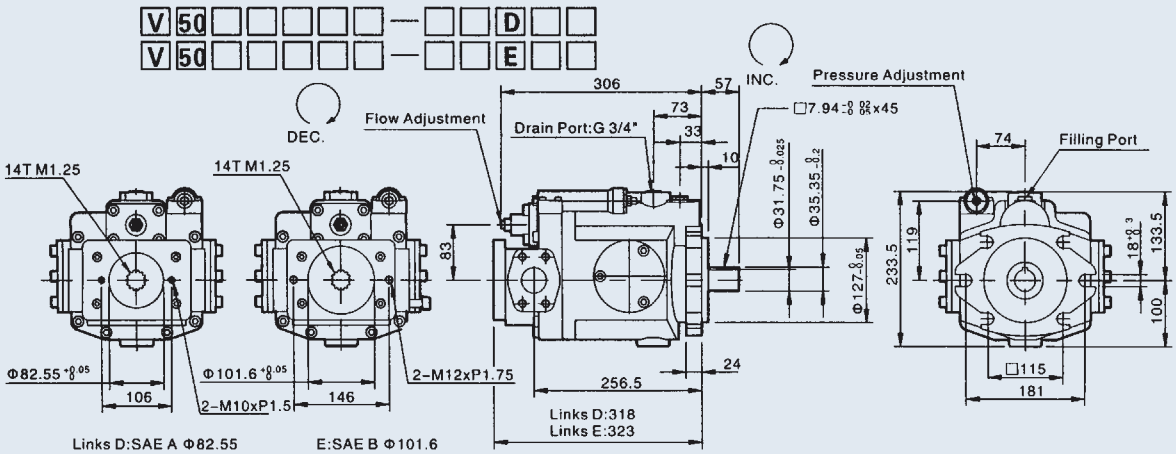

Type	A	B	C	CG	D	DG	E	EG	F	FG	G	GJ	GM	HL	HK	HQ
	O				O	O	O	O			O	O	O	O	O	O

Thru Drive Option

V50, V70 Axial Port

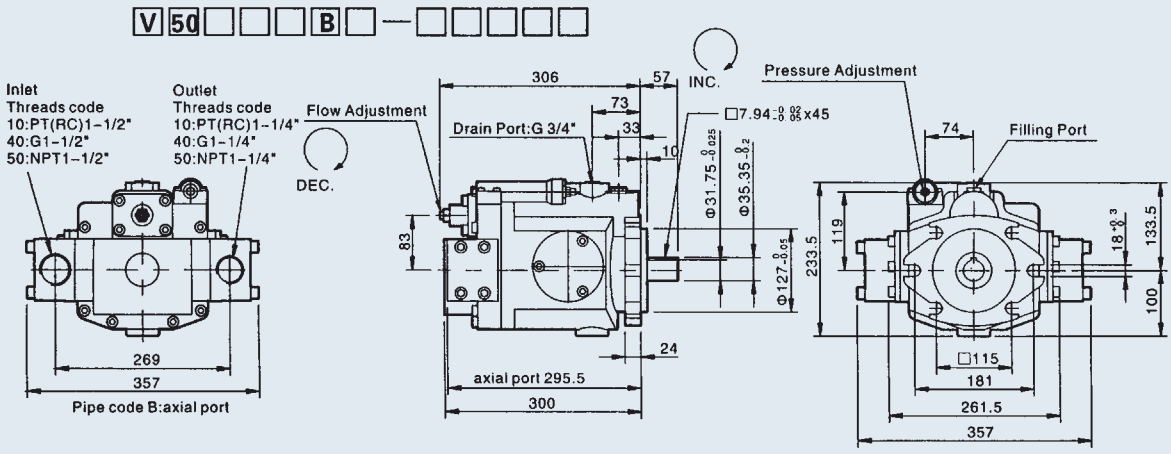

Type	A	B	C	D	F	G	GJ	GM	HL	HK	HQ
	O	O	O	O	O	O	O	O	O		

Axial Port Option

V SERIES AXIAL PISTON PUMP

B

Decomposition Chart

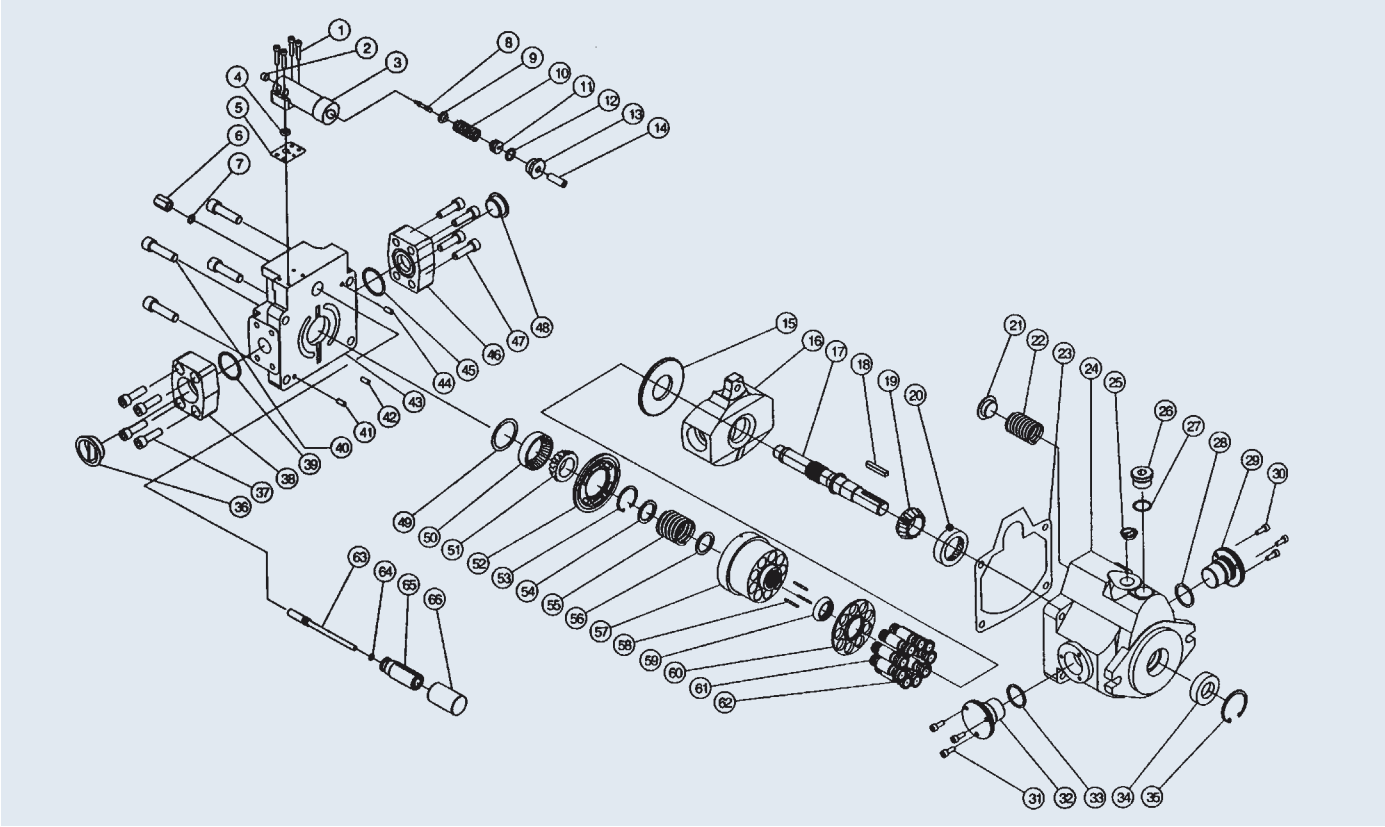

List of parts

No.	Description	No.	Description	No.	Description	No.	Description
1	Bolt	18	Shaft Key	35	M snap ring	52	Valve plate
2	Port plug	19	Bearing of shaft	36	Plug	53	Snap ring
3	Pressure compensator	20	Bearing of shaft	37	Bolt	54	Washer cylinder block
4	O-ring	21	Servo spring washer	38	Flange	55	Retainer spring
5	Gasket	22	Servo spring	39	O-ring	56	Washer cylinder block
6	Lock nut	23	End cover seal	40	Bolt	57	Cylinder block
7	O-ring	24	Pump body	41	Roller	58	Roller
8	Control compensator shaft	25	Drain plug	42	Roller	59	Cylinder block holder
9	Spring washer	26	Filling screw	43	End cover	60	Slipper retainer
10	Control spring	27	O-ring	44	Roller	61	Pistons
11	O-ring washer	28	O-ring	45	O-ring	62	Piston head
12	O-ring	29	Swash shaft	46	Flange	63	Flow screw
13	Lock nut	30	Bolt	47	Bolt	64	O-ring
14	Screw	31	Bolt	48	Plug	65	Sleeve piston
15	Slipper plate	32	Swash shaft	49	Washer cylinder block	66	Servo piston sleeve
16	Swash	33	O-ring	50	Bearing of pump cover		
17	Shaft	34	Shaft seal	51	Bearing of pump cover		

VR SERIES AXIAL PISTON PUMP

Dimensions

VR15A※※B-※Axial Port

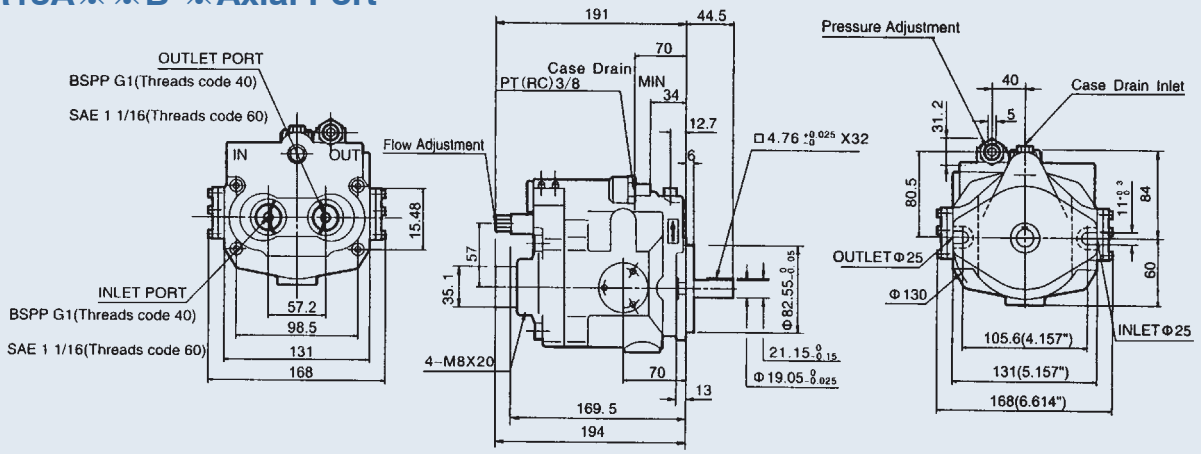

VR23A※※B-※Axial Port (Pipe type)

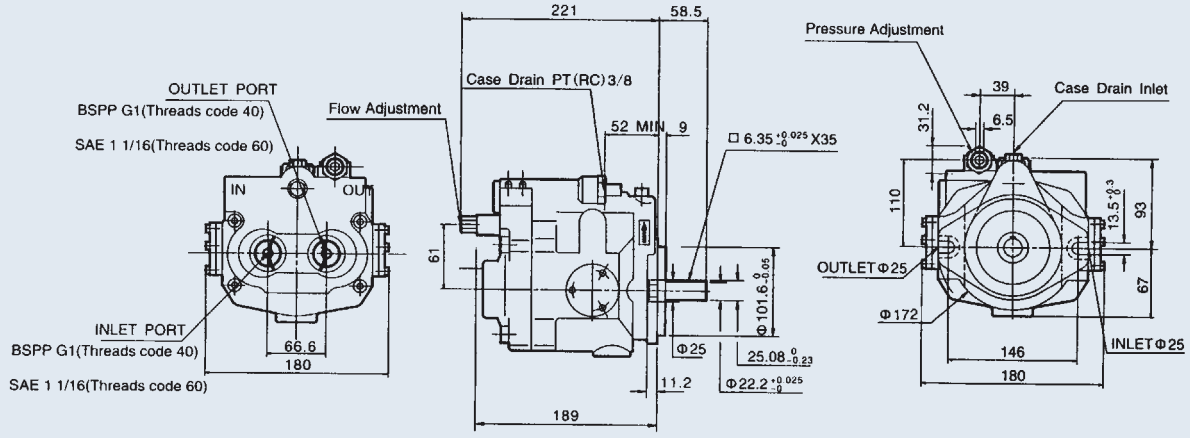

VR38A※※B-※Axial Port (Pipe type)

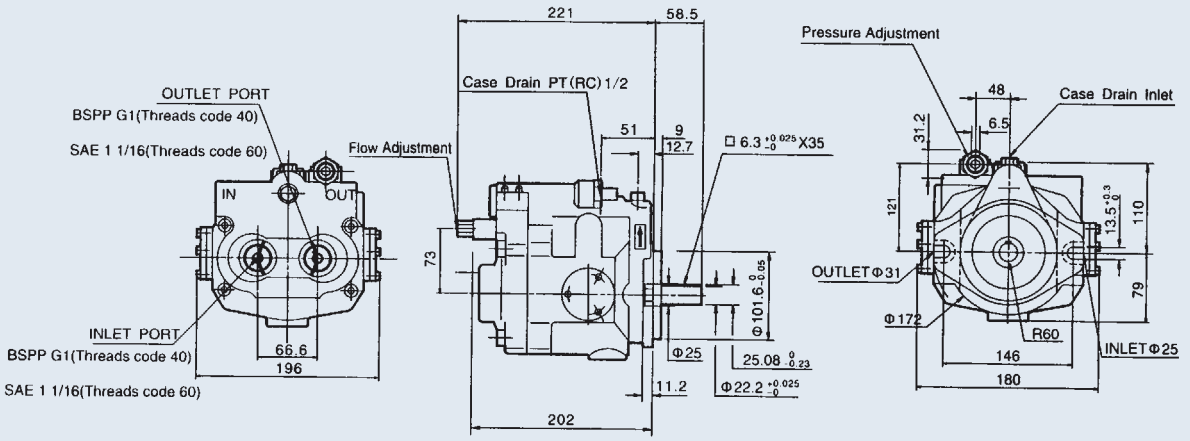

V SERIES TANDEM AXIAL PISTON PUMP

Tandem pump (Multi-option for tandem pump)

Pump 1 Pump 2	V15(V18) V15(V18)	V23(V25) V15(V18)	V23(V25) V23(V25)	V38(V42) V15(V18)	V38(V42) V23(V25)	V38(V42) V38(V42)	V50(V70) V15(V18)	V50(V70) V23(V25)	V50(V70) V38(V42)
A	G 3/8"	G 3/8"	G 3/8"	G 3/8"	G 3/8"	G 1/2"	G 3/8"	G 3/8"	G 1/2"
B	G 3/8"	G 3/8"	G 3/8"	G 1/2"	G 1/2"	G 1/2"	G 3/4"	G 3/4"	G 3/4"
C	57.45	57.45	61	57.45	61	73	57.45	61	73
D	35.1	35.1	52.4	35.1	52.4	58.7	35.1	52.4	58.7
E	35.1	35.1	26.2	35.1	26.2	30.2	35.1	26.2	30.2
F	35.1	52.4	52.4	58.7	58.7	58.7	69.9	69.9	69.9
G	35.1	26.2	26.2	30.2	30.2	30.2	35.7	35.7	35.7
H	M8×20	M8×20	M10×16	M8×20	M10×16	M10×16	M8×20	M10×16	M10×16
I	M8×20	M10×16	M10×16	M10×16	M10×16	M10×16	M12×25	M12×25	M12×25
J	147	147	170	147	170	179	147	170	179
K	147	170	170	179	179	179	256.5	256.5	256.5
L	332	369	402	378	401	410	464	493	502
M	382	419	455	428	454	465	515	546	555
N	48	48	51	48	51	51	48	51	51
O	48	51	51	51	51	51	73	73	73
P	6	9	9	9	9	9	10	10	10
Q	4.76×32	6.35×40	6.35×40	6.35×40	6.35×40	6.35×40	7.94×45	7.94×45	7.94×45
R	13	14	14	14.5	14.5	14.5	24	24	24
S	ø19.05	ø22.22	ø22.22	ø22.22	ø22.22	ø22.22	ø31.75	ø31.75	ø31.75
T	21.15	25.08	25.08	25.08	25.08	25.08	35.35	35.35	35.35
U	ø82.55	ø101.6	ø101.6	ø101.6	ø101.6	ø101.6	ø127	ø127	ø127
V	ø25	ø25	ø25	ø31	ø31	ø31	ø38	ø38	ø38
W	ø25	ø25	ø25	ø31	ø31	ø31	ø38	ø38	ø38
X	106	146	146	146	146	146	181	181	181
Y	131	146	146	160	160	160	208	208	208
Z	165	182	182	198.6	198.6	198.6	261.5	261.5	261.5
A1	44	39	39	39	39	39	74	74	74
A2	31.2	31.2	31.2	31.2	31.2	31.2	40	40	40
A3	5	5	5	5	5	5	8	8	8
A4	84	110	110	121	121	121	119	119	119
A5	11	13.5	13.5	13.5	13.5	13.5	18	18	18
A6	44.5	58.5	58.5	58.5	58.5	58.5	57	57	57
A7	160	193	193	210	210	210	233.5	233.5	233.5
A8	91.5	93	93	113.5	113.5	113.5	133.5	133.5	133.5
A9	60	68	68	72	72	72	100	100	100

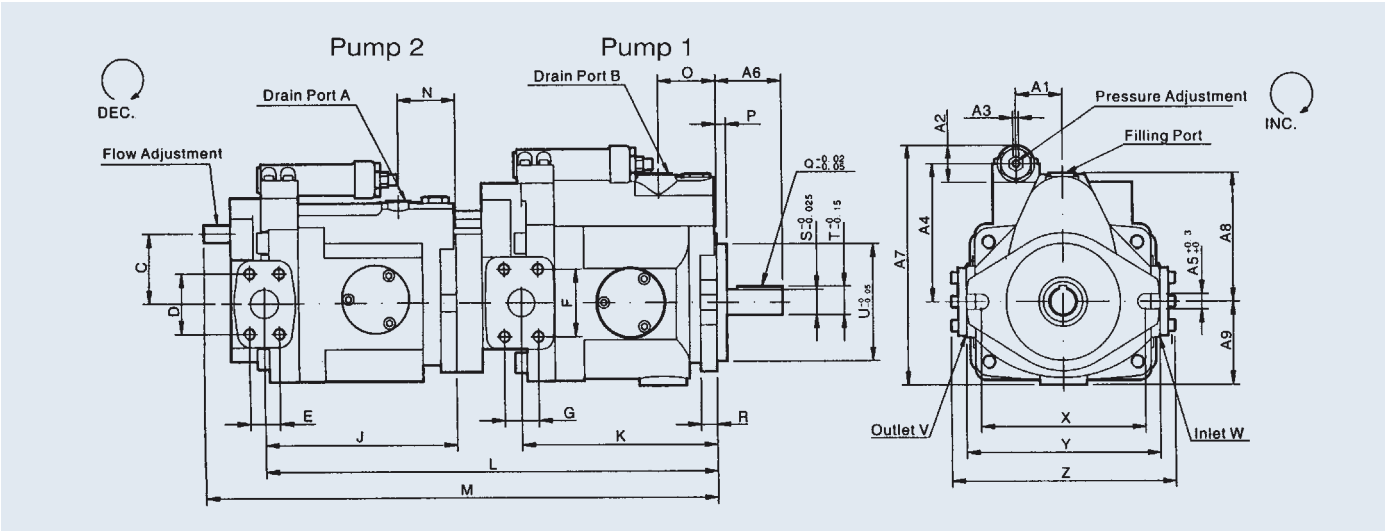

AR SERIES AXIAL PISTON PUMP

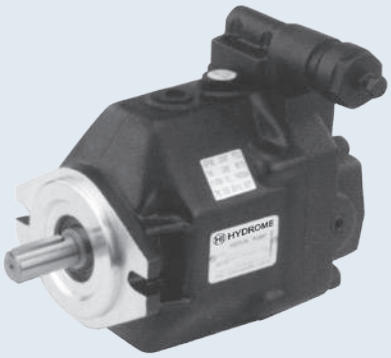

AR Control Type (see page. 15,16,17)

01: Pressure Compensator
G: Remote Pressure Compensator
GJ: Layer Porportional Pressure Compensator
GR: Electrical Unloading
GB: Dual Pressure Control
GC: Dual Pressure+Electrical Unloading
GM: Remote Pressure Compensator allows a pilot valve
HL: Load-sensing Compensator

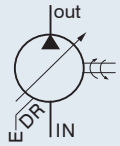

Ordering Codes

※Standard

Model	F	R	01	C	S	K	10	Y
	Mounting	Direction of Rotation	Control Type	Pres. Adj. Range bar (MPa)	Port Position	Shaft Extension	Threads Code	Design
AR16 (15.8cc/rev) AR22 (22.2cc/rev)	F: Flange Mtg.	Viewed from Shaft End * R: Clockwise (Standard) L: Counter Clockwise	01: Pressure Compensator Type HL: Load Sensing Compensator G: Remote Pressure Compensator	B:12~70 (1.2~7) C:12~210 (1.2~21)	None: Axial Port S: Side Port	*K: Keyed G: 16/32 DP-13T T: 16/32 DP-9T	*10: PT(RC) theard 40: BSPP(G) theard 50: NPT theard	X *Y

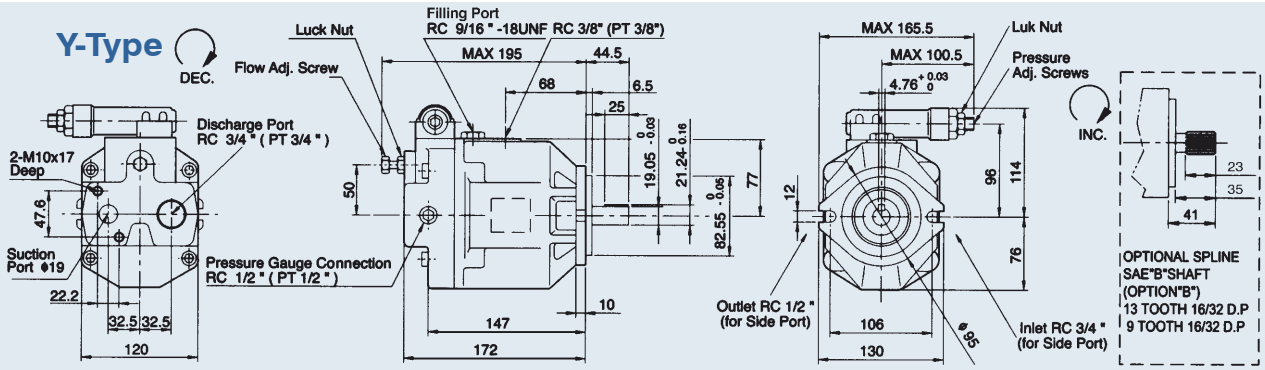

AR-16 Input Speed:1800 rpm/min

Fluid:Standard Hydraulic Oil ISO VG32 @50℃

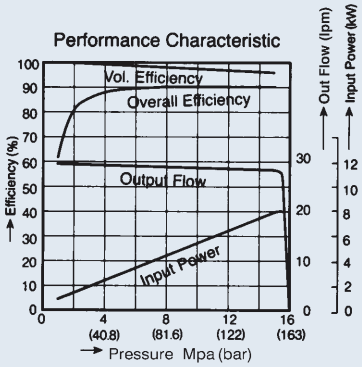

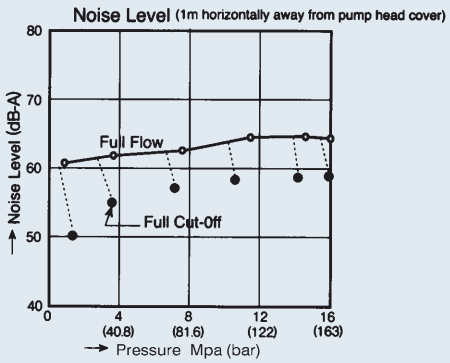

AR-22 Input Speed:1800 rpm/min

Fluid:Standard Hydraulic Oil ISO VG32 @50℃

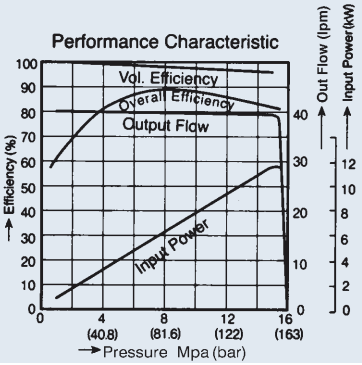

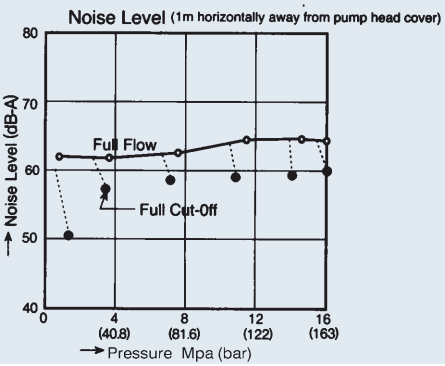

AR SERIES AXIAL PISTON PUMP

B

Decomposition Chart

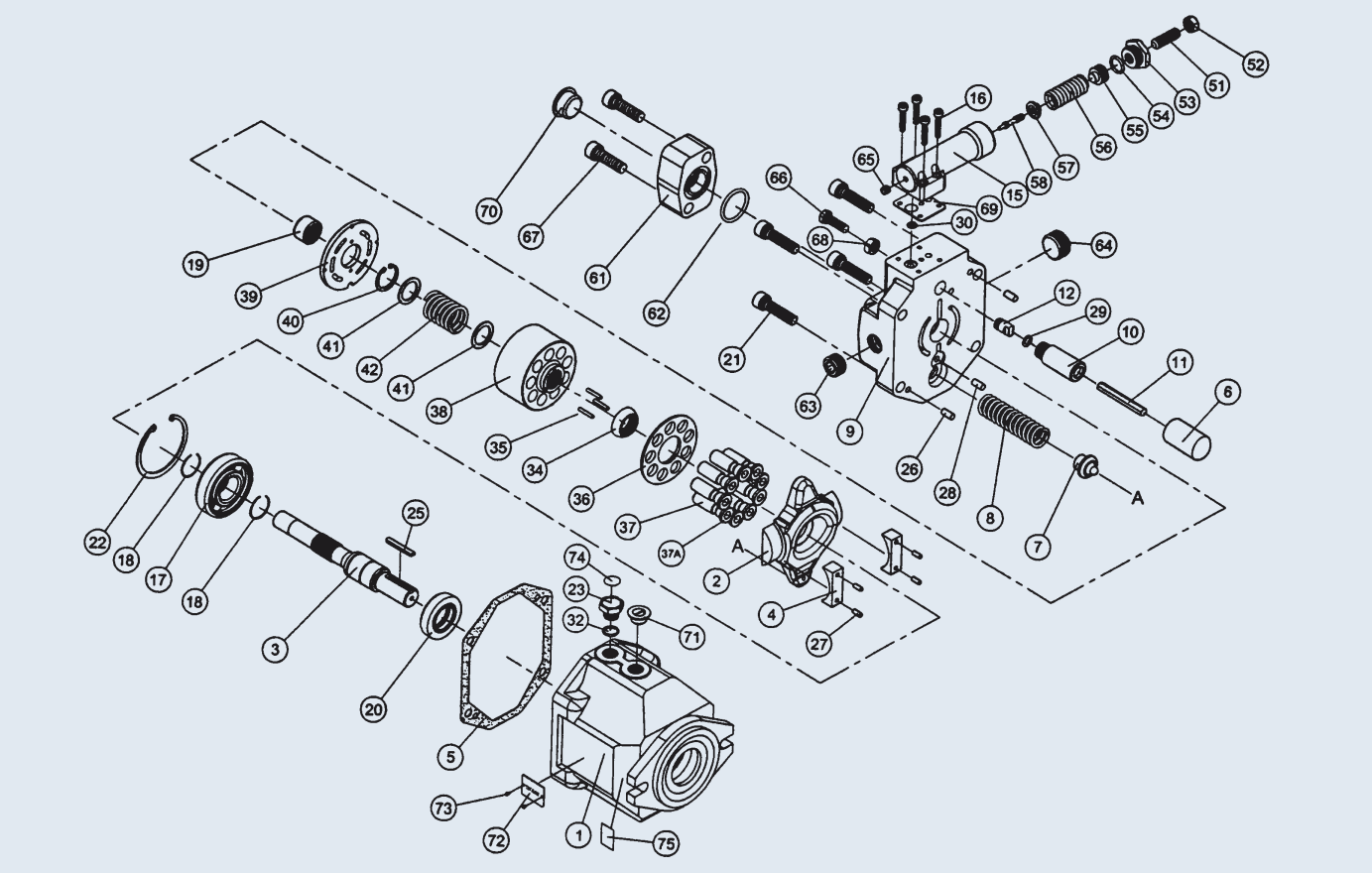

List of parts

No.	Description	No.	Description	No.	Description	No.	Description
1	Pump body	18	C snap ring 1-1/2	36	Slipper retainer	58	Control compensator shaft
2	Swash	19	1715 bearing rear	37	Piston	61	Flange 506A (6”)
3	Swash shaft	20	Shaft seal	37A	Head of piston	62	O-ring G30
4	Swash plate	21	Screw M10x40L	38	Cylinder block	63	Pipe plug 1/2
5	Body seal	22	R62 snap ring	39	Valve plate	64	Pipe plug 3/4
6	Servo piston sleeve	23	Plug, feeder	40	Snap ring for bore R28	65	NPT 1/16
7	Servo spring washer	25	Key	41	Washer cylinder block	66	Screw M8x35
8	Swash spring	26	Locator pin, body	42	Retainer spring	67	Screw M10x35
9	Pump body / end cover	27	Locator pin, cradle	51	Screw M10x30	68	Lock nut M8
10	Sleeve piston	28	Locator pin, ø6x12.8	52	Lock nut M10	69	Body seal
11	Flow bar	29	O-ring P8 70˚	53	Control lock nut	70	Plastic plug 3/4
12	Seal	30	O-ring P7	54	O-ring P14 70˚	71	Plastic plug 3/8
15	Valve	32	O-ring S11	55	Control washer	72-73	Name Plate
16	Screw M5x25L	34	Cylinder block holder	56	Control spring	74-75	Description label
17	6305 bearing front	35	Roller	57	Spring washer		

PV SERIES AXIAL PISTON PUMP

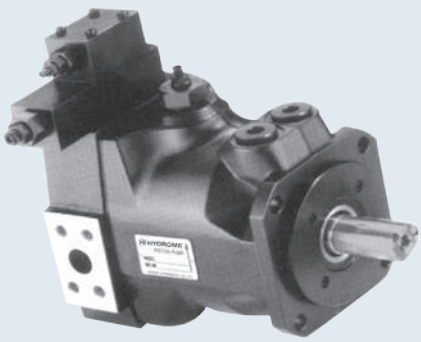

FEATURES

1. New type of swash plate and large servo pistons with strong bias spring achieve fast response, reduce the noise due to active decompression of system at down stroke.
2. Nine piston and new precompression technology (precompression filter volume) result in unbeaten low outlet flow pulsation.
3. Rigid and FEM-optimized body design for lowest noise level.
4. Thru drive for 100% nominal torque.
5. Pump combinations (tandem pumps) of same size and model and mounting interface for basically all metric or SAE mounting interfaces.

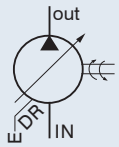

Continuous: 350bar
Intermittent: 420bar

B

Quick Reference Data Chart

Model	Displacement		Pump Delivery (7 bar) 100 PSI					
			1200 RPM		1500 RPM		1800 RPM	
	cc/rev	In³/rev	LPM	U.S. GPM	LPM	U.S. GPM	LPM	U.S. GPM
PV016	16	0.98	19.2	5.1	24	6.3	28.8	7.6
PV020	20	1.2	24	6.3	30	7.9	36	9.5
PV023	23	1.4	27.6	7.3	34.5	9.1	41.4	10.9
PV032	32	19	38.4	10.1	48	12.7	57.6	15.2
PV040	40	2.4	48	12.7	60	15.9	72	19
PV046	46	2.8	55.2	14.6	69	18.2	82.8	21.9
PV063	63	3.8	75.6	20	94.5	25	113.4	30
PV071	71	4.3	85.8	22.7	107	28.3	128.7	34
PV080	80	4.8	96	25.4	120	31.7	144	38
PV092	92	5.6	110.4	29.2	138	36.5	165.6	43.8
PV140	140	8.5	168	44.4	210	55.5	252.1	66.6
PV180	180	11	216	57.1	270	71.3	324	85.6
PV270	270	16.5	324	85.6	405	107	486	128.4

Model	APPROX. Noise Levels Db(A) Full Flow and 1500 RPM			Input Horse Power, Max. Displacement & 345 bar (5000PSI)		Operating Speed		Weight (kg)	
	70 bar (1 KPSI)	207 bar (3 KPSI)	343 bar (5 KPSI)	1500 rpm	1800 rpm	Max.	Min.		
				KW(hp)	KW(hp)	RPM	RPM	kg	lb
PV016	56	60	68	15.5 (20.8)	18.5 (24.8)	2750	300	19	41.8
PV020				19.5 (26.1)	23.4 (31.4)				
PV023				22.5 (30.2)	25.1 (33.6)				
PV032	59	62	69	31 (41.6)	35.1 (47.1)	2400		30	66
PV040				39 (52.3)	46.5 (62.3)				
PV046				45 (60.3)	50.2 (67.3)				
PV063	66	70	74	61.5 (82.4)	70.1 (94)	2100		60	132
PV071				70 (93.8)	80 (107.2)	2100			
PV080				78 (104.6)	89.2 (119.6)	2000			
PV092				89.5 (120)	136.8 (183.4)	1900			
PV140	70	74	76	136 (182.3)	149.4 (200.3)	2200		90	198
PV180	71	75	77	175 (235)	210 (282)	2200		90	198
PV270	77	79	81	263 (353)	298 (400)	1800		172	378.4

1. **Installation outlet port top, the pipe have to less than 2 bar.**
2. **The use of max. pressure override 6 min, hydraulic oil clean that see General Installation Information.**
3. **Hydrome offer tandem pumps, and other pumps connection, the connection type use metric version and SAE version dimensions.**

PV SERIES AXIAL PISTON PUMP

How to order

PV - 063 - GT - R - M - 1 - A - ※ - ※ - ※

1 2 3 4 5 6 7 8 9 10

1 Series Axial piston pump variable displacement high pressure version

2 Size and Displacement

Code	Displacement cc/rev (In³/rev)
016	16 (0.98)
020	20 (1.2)
023	23 (1.4)
032	32 (1.9)
040	40 (2.4)

Code	Displacement cc/rev (In³/rev)
046	46 (2.8)
063	63 (3.8)
071	71 (4.3)
080	80 (4.8)
092	92 (5.6)

Code	Displacement cc/rev (In³/rev)
140	140 (8.5)
180	180 (10.9)
270	270 (16.5)

3 Control Types

	Code	Compensator
※	Standard Type Pressure Compensator	
	A2	10~140 bar
	A3	40~210 bar
	A4	70~350 bar
	Remote Type	
※	GT	Remote pressure compensator
※	GM	Remote pressure compensator allows a pilot valve
	GA	Remote pressure compensator allows a pilot valve (valve included)
	GJ	Layer proportional pressure compensator (valve included)
	Electrical Unloading Type	
	GR	Electrical unloading
	GB	Dual pressure control
	GC	Dual pressure+electrical unloading
	Load-sensing Type	
※	HL	Load-sensing type
	HM	Load-sensing type
	HJ	2-valve load-sensing type (valve included)
	HA	2-valve load-sensing type
	HK	Proportional electro-hydraulic load sensing type
	HQ	Load-sensing & Proportional flow control
	Proportionable displacement Type	
	FV	Proportionable displacement control
	FR	Proportionable displacement control with pressure
	FG	Proportionable displacement control with pressure control
	Horse Power Type	
	PA□	Horse power compensator
※	PM□	Horse power compensator, pilot flow internal pressure pilot valve (valve included)
	PG□	Horse power compensator, pilot flow internal
	PL□	Horse power compensator, load-sensing compensator
	PH□	Horse power compensator, pilot flow external for load-sensing

Code	Horse power	PV016~ PV023	PV032~ PV046	PV063~ PV092	PV140	PV180	PV270
A	3 KW	●					
B	4 KW	●					
C	5.5 KW	●	●				
D	7.5 KW	●	●				
E	11 KW	●	●	●			
F	15 KW		●	●			
G	18.5 KW		●	●	●		
H	22 KW		●	●	●	●	
I	30 KW			●	●	●	
J	37 KW			●	●	●	●
K	45 KW			●	●	●	●
L	55 KW				●	●	●
M	75 KW					●	●
N	90 KW					●	●
O	110 KW						●
P	132 KW						●

4 Rotation (Viewed from shaft end)

	Code	Rotation
※	R	clockwise
	L	counterclockwise

B

PV SERIES AXIAL PISTON PUMP

How to order

PV - 063 - GT - R - M - 1 - A - ※ - ※ - ※

1 2 3 4 5 6 7 8 9 10

5 Mounting

※

Code	Mounting	
M (standard)	Metric	ISO 3019/2 Cylindric, key
K		ISO 3019/2 Splined, DIN5480

Code	Mounting	
N	Inch	ISO 3019/1 Cylindric, key
D		ISO 3019/1 Splined, SAE

※

Code		Model	Shaft		Flange		Mounting
			A	B	C	D	E
M	Metric	PV016~PV023	ø25	8×7×40	ø100	9	ø125
		PV032~PV046	ø32	10×8×56	ø125	9	ø160
		PV063~PV092	ø40	12×8×80	ø160	9	ø200
		PV140~PV180	ø50	12×8×80	ø160	9	ø200
		PV270	ø65	12×8×80	ø200	9	ø250
K	Metric	PV016~PV023	W25×1.5×15×8f DIN5480		ø100	9	ø125
		PV032~PV046	W32×1.5×20×8f DIN5480		ø125	9	ø160
		PV063~PV092	W40×1.5×25×8f DIN5480		ø160	9	ø200
		PV140~PV180	W50×2×24×9g DIN5480		ø160	9	ø200
		PV270	W60×2×28×9g DIN5480		ø200	9	ø250
N	Inch	PV016~PV023	ø1"	0.25"×0.25"×1.6"	ø4"	3/8"	ø5"
		PV032~PV046	ø1-1/4"	5/16"×5/16"×2.2"	ø5"	1/2"	ø6.37"
		PV063~PV092	ø1-3/4"	7/16"×7/16"×3.15"	ø6"	1/2"	ø9"
		PV140~PV180	ø2"	1/2"×1/2"×2.95"	ø6"	1/2"	ø9"
		PV270	ø2"	1/2"×1/2"×2.95"	ø6.5"	5/8"	ø12.5"
D	Inch	PV016~PV023	Splined 15T 16/32DP ANSI B92.1		ø4"	3/8"	ø5"
		PV032~PV046	Splined 14T 12/24DP ANSI B92.1		ø5"	1/2"	ø6.37"
		PV063~PV092	Splined 13T 8/16DP ANSI B92.1		ø6"	1/2"	ø9"
		PV140~PV180	Splined 15T 8/16DP ANSI B92.1		ø6"	1/2"	ø9"
		PV270	Splined 15T 8/16DP ANSI B92.1		ø6.5"	5/8"	ø12.5"

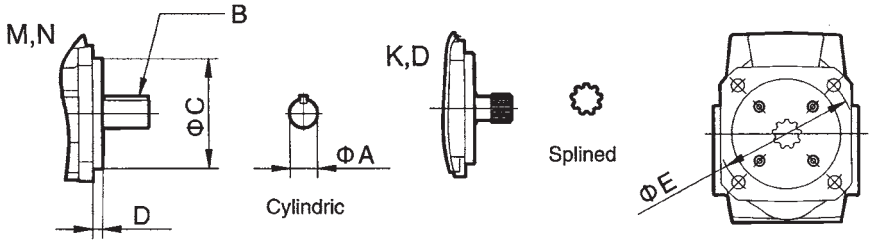

6 Threads

※

Code	Threads
1 (standard)	BSPP (G)
2	PT (RC)
3	UNF
4	NPT
7	ISO 6149

PV SERIES AXIAL PISTON PUMP

How to order

PV - 063 - GT - R - M - 1 - A - ※-※-※

1 2 3 4 5 6 7 8 9 10

7 Thru drive & 2nd pump

	Code		
	Code	Thru drive & 2nd pump	
※	A (standard)	Single pump	
※	B	Prepared for thru drive	
	With adaptor for 2nd pump		
	C	Inch	SAE AA, ø2" (ø50.8mm)
	D		SAE A, ø3-1/4" (ø82.55mm)
	E		SAE B, ø4" (ø101.6mm)
	F		SAE C, ø5" (ø127mm)
	G		SAE D, ø6" (ø152.4mm)
	H		SAE E, ø6.5" (ø165.1mm)
	I	Metric	Metric, ø63
	J		Metric, ø80
	K		Metric, ø100
	L		Metric, ø125
	M		Metric, ø160
	N		Metric, ø200
	Other pump are acceptable order		

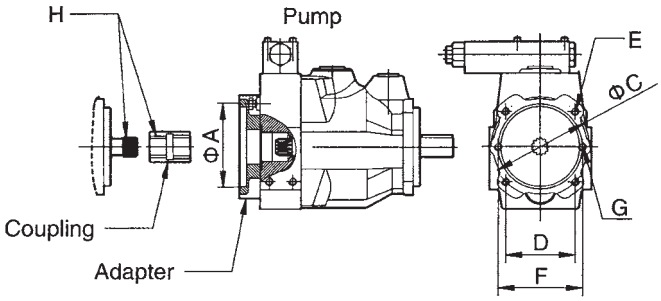

Code		Model	øA	øC	D	E	F	G	H
C	Inch	SAE AA, ø2" (ø50.8mm)	ø2" (ø50.8)				3.25" (82.55mm)	5/16"-18	9T 20/40 DP
D		SAE A, ø3-1/4" (ø82.55mm)	ø3-1/4" (ø82.55)				4.188" (106.3mm)	3/8"-16	9T 16/32 DP
E		SAE B, ø4" (ø101.6mm)	ø4" (ø101.6)		3.536" (89.8mm)	1/2"-13	5.75" (146.05mm)	1/2"-13	13T 16/32 DP, 15T 16/32 DP
F		SAE C, ø5" (ø127mm)	ø5" (ø127)		4.508" (114.5mm)	1/2"-13	7.125" (180.98mm)	5/8"-11	14T 12/24 DP, 15T 16/32 DP
G		SAE D, ø6" (ø152.4mm)	ø6" (ø152.4)		6.364" (161.6mm)	5/8"-11	9" (228.6mm)	5/8"-11	13T 8/16 DP, 15T 8/16 DP
H		SAE E, ø6.5" (ø165.1mm)	ø6.5" (ø165.1)		8.839" (224.5mm)	3/4"-10			15T 8/16 DP
I	Metric	Metric, ø63	ø63	ø85		M8	100	M8	
J		Metric, ø80	ø180	ø103		M8	109	M10	
K		Metric, ø100	ø100	ø125		M10	150	M12	W25×1.5×15×8f
L		Metric, ø125	ø125	ø160		M12	180	M16	W32×1.5×20×8f
M		Metric, ø160	ø160	ø200		M16	224	M20	W40×1.5×25×8f , W50×2×24×9g
N		Metric, ø200	ø200	ø250		M20			W50×2×24×9g

Coupling Code	pump	H	
A-D1	PV016~ PV023	D1	9T 20/40 DP
A-D2		D2	9T 16/32 DP
A-D3		D3	13T 16/32 DP
A-D4		D4	15T 16/32 DP
A-W1		W1	W25×1.5×15×8f
B-D2	PV032~ PV046	D2	9T 16/32 DP
B-D3		D3	13T 16/32 DP
B-D4		D4	15T 16/32 DP
B-D5		D5	14T 12/24 DP
B-W1		W1	W25×1.5×15×8f
B-W2		W2	W32×1.5×20×8f
C-D2	PV063~ PV092	D2	9T 16/32 DP
C-D3		D3	13T 16/32 DP
C-D4		D4	15T 16/32 DP

Coupling Code	pump	H	
C-D5	PV063~ PV092	D5	14T 12/24 DP
C-D6		D6	13T 8/16 DP
C-D7		D7	15T 8/16 DP
C-W1		W1	W25×1.5×15×8f
C-W2		W2	W32×1.5×20×8f
C-W3		W3	W40×1.5×25×8f
C-W4		W4	W50×2×24×9g
D-D2	PV140~ PV180	D2	9T 16/32 DP
D-D3		D3	13T 16/32 DP
D-D4		D4	15T 16/32 DP
D-D5		D5	14T 12/24 DP
D-D6		D6	13T 8/16 DP
D-D7		D7	15T 8/16 DP
D-W1		W1	W25×1.5×15×8f

Coupling Code	pump	H	
D-W2	PV140~ PV180	W2	W32×1.5×20×8f
D-W3		W3	W40×1.5×25×8f
D-W4		W4	W50×2×24×9g
E-D2	PV270	D2	9T 16/32 DP
E-D3		D3	13T 16/32 DP
E-D4		D4	15T 16/32 DP
E-D5		D5	14T 12/24 DP
E-D6		D6	13T 8/16 DP
E-D7		D7	15T 8/16 DP
E-W1		W1	W25×1.5×15×8f
E-W2		W2	W32×1.5×20×8f
E-W3		W3	W40×1.5×25×8f
E-W4		W4	W50×2×24×9g
E-W5		W5	W60×2×28×9g

8 Voltage

Code	Voltage
0	None
A	AC100V (50-60Hz)
B	AC110V (60Hz)

Code	Voltage
C	AC200V (50-60Hz)
D	AC220V (60Hz)
E	DC12V

Code	Voltage
F	DC24V

9 Seals

	Code	Seals
※	N	NBR
	V	FPM

Code	Seals
E	Ethylen-propylen

10 Design No. Not require for order

PV SERIES AXIAL PISTON PUMP

B

Compensator

Standard Type

A: Standard pressure compensator remote type
GT: Remote pressure compensator
GM: Remote pressure compensator allows a pilot valve
GA: Remote pressure compensator allows a pilot valve (valve included)
GJ: Layer proportional pressure compensator (valve included)

Load-sensing Type

HL: Load-sensing compensator
HM: Load-sensing compensator
HJ: 2-vavle load-sensing compensator
HA: 2-vavle load-sensing compensator (valve included)
HK: Proportional electro-hydraulic load sensing type
HQ: Load-sensing & Proportional flow control

Electrical Unloading Type

GR: Electrical unloading
GB: 2 pressure electrical selection
GC: 2 pressure + electrical unloading

Horse Power Type

PA: Horse power compensator
PM: Horse power compensator, pilot flow internal pressure pilot valve included
PG: Horse power compensator, pilot flow internal
PL: Horse power compensator, Load-sensing compensator
PH: Horse power compensator, pilot flow external for load-sensing

A: Standard Pressure compensator

The standard pressure compensator adjusts the pump displacement according to the actual need of the system in order to keep the pressure constant. As long as the system pressure at outlet port P is lower than the set pressure (set as spring preload of the compensator spring) the working port A of the compensator valve is connected to the case drain and the piston area is unloaded. Bias spring and system pressure on the annulus area keep the pump at full displacement.

When the system pressure reaches the set pressure the compensator valve spool connects port P1 to A and builds up a pressure at the servo piston resulting in a down stroking of the pump. The displacement of the pump is controlled in order to match the flow requirement of the system.

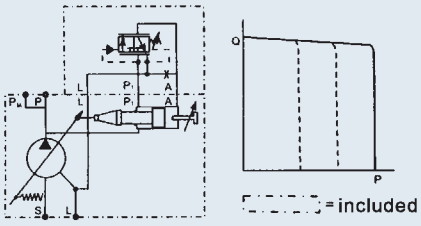

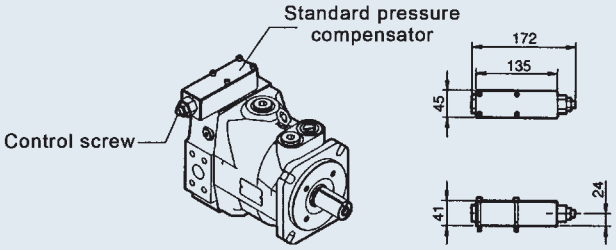

GT: Remote Pressure compensator

While at the standard pressure compensator the pressure is set directly at the compensator spring, the setting of the remote pressure compensator can be achieved by any suitable pilot pressure valve connected to pilot port PP. The pilot flow supply is internal through the valve spool.

The pilot flow is 1-1.5 lpm. The pilot valve can be installed remote from the pump in some distance. That allows pressure setting e.g. from the control panel of the machine. The remote pressure compensator and is able to solve instability problems that may occur with a standard pressure compensator in critical applications. The pressure pilot valve can also be electronically controlled (proportional pressure valve) or combined with a directional control valve for low pressure standby operation.

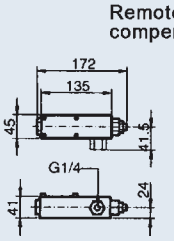

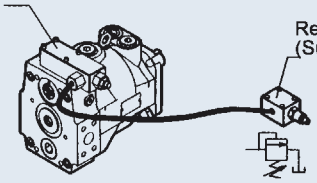

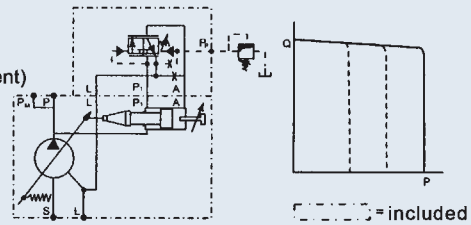

Compensator

Remote Pressure compensator allows pilot valve

Version GM of remote pressure compensator provides on its top side an interface NG6, DIN24340 (CETOP 03 at RP35H, NFPA D03). This interface allows a direct mounting of a pilot valve. Beside manual or electro hydraulic operated valves it is also possible to mount complete multiple pressure circuits directly on the compensator body. HYDROME offers a variety of these compensator accessories ready to install. All remote pressure compensator have a factory setting of 15 bar differential pressure. With this setting, the controlled pressure at the pump outlet is higher than the pressure controlled by the pilot valve.

GM: Remote Pressure compensator allows a pilot valve

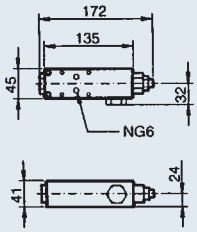

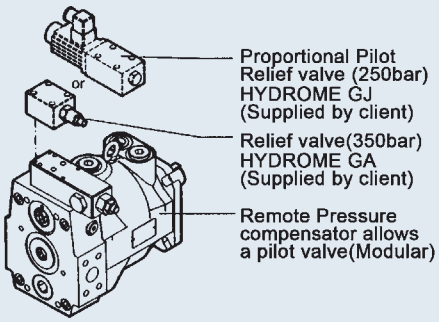

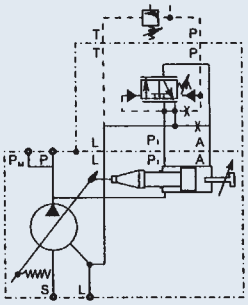

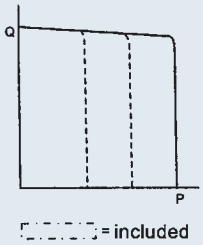

GA: Remote Pressure compensator allows a pilot valve (valve included)

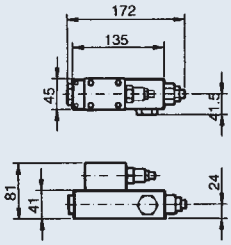

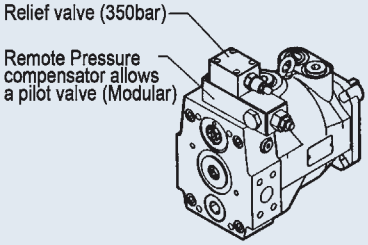

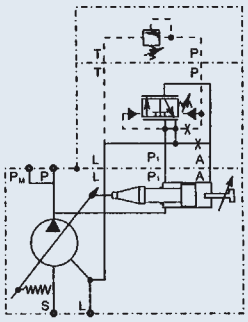

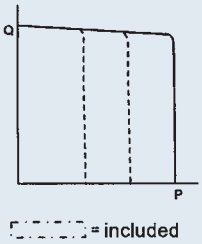

GJ: Layer Proportional pressure compensator (valve included)

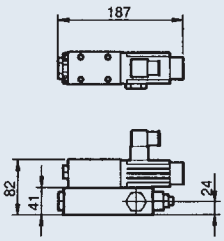

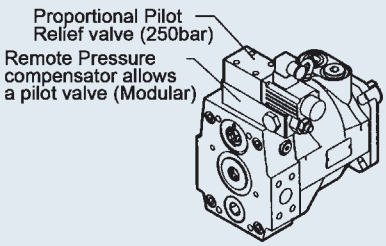

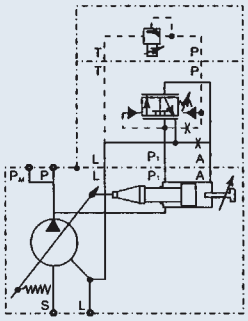

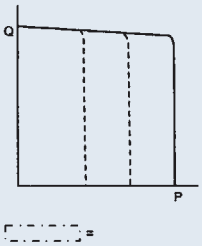

included

PV SERIES AXIAL PISTON PUMP

Compensator

Electrical Unloading Type

PV pump with fast response remote pressure control, relief valve with 2 pressure stages, electrical pressure selection, nitrile seals, spindle adjustment, 24 VDC solenoid, plug to DIN46350 accessories fitted.
Usable for horsepower control and proportional volume control, too.

GR: Electrical unloading type

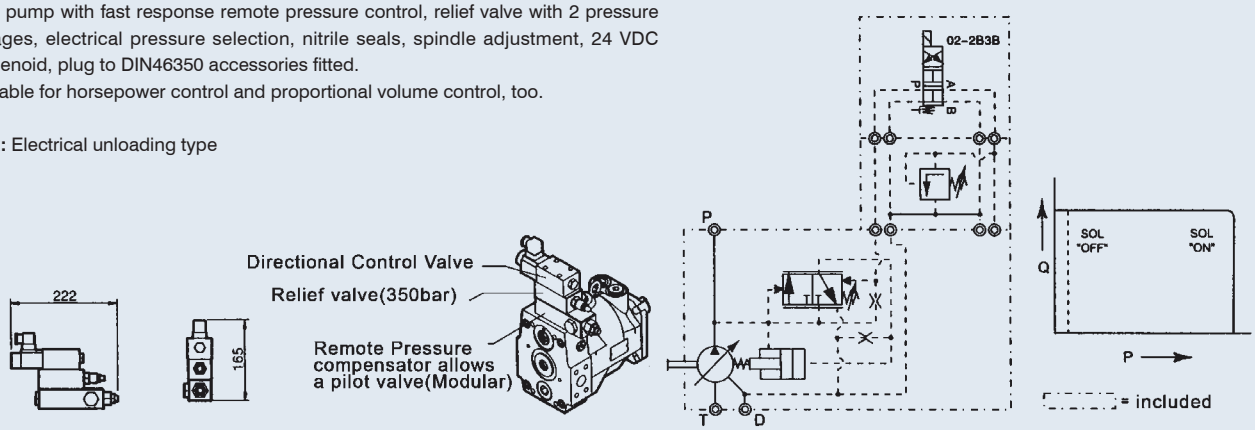

GB: Dual pressure control

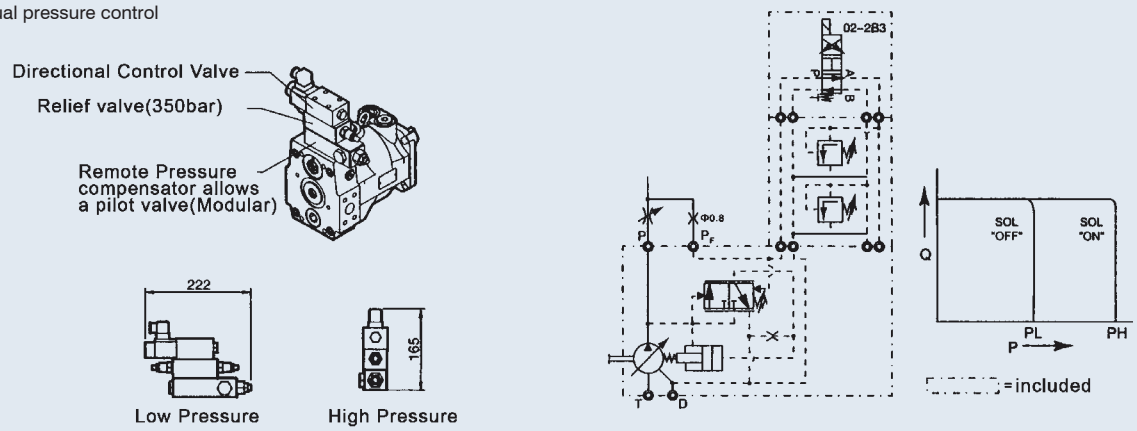

GC: Dual pressure + electrical unloading

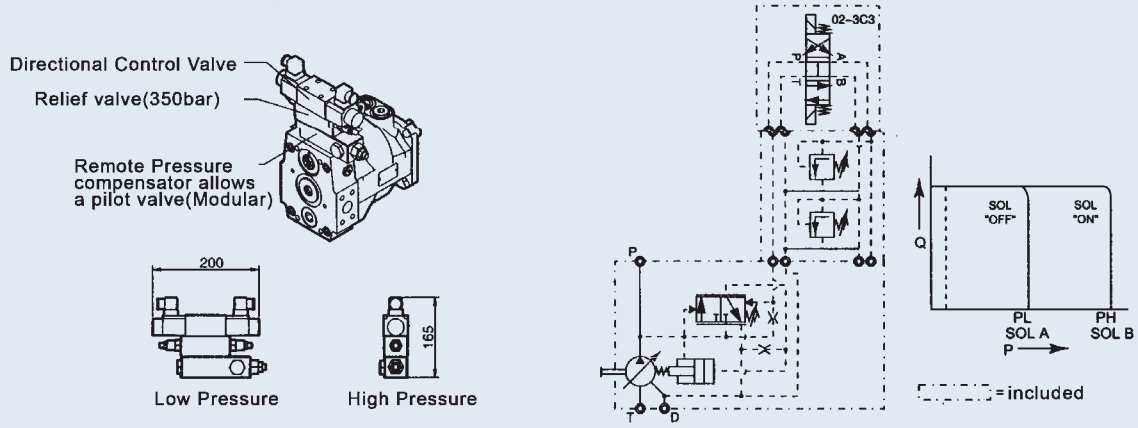

Compensator

Load-sensing Type

HL: Load-sensing compensator

The load-sensing compensator has an external pilot pressure supply. Factory setting for the differential pressure is 10 bar. The input signal to the compensator is the differential pressure at a main stream resistor. A load-sensing compensator represents mainly a flow control for the pump output flow, because the compensator keeps the pressure drop at the main stream resistor constant. A variable input speed or a varying load (pressure) has consequently no influence on the output flow of the pump and speed of the actuator. By adding a pilot orifice (ø0.8mm) and compensation can be added to the flow control function. See the circuit diagram below, left.

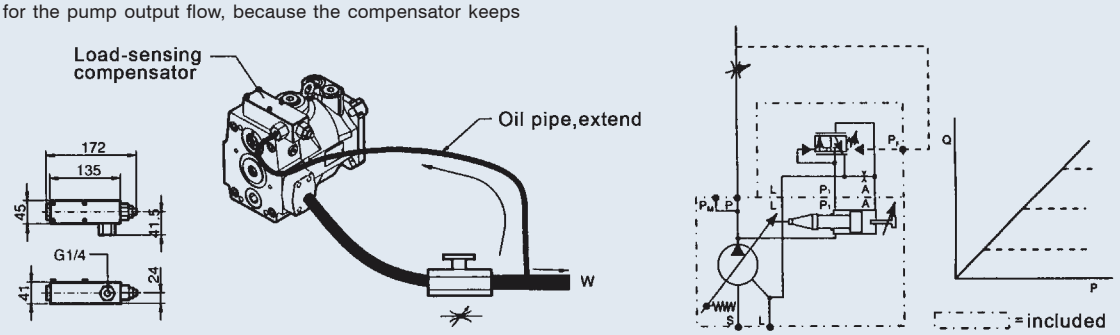

HM: Load-sensing compensator

Shown above is load sensing compensator code HM with an NG6 interface on top of the control valve. That allows direct mounting of a pilot valve for pressure compensation. This version includes the pilot orifice. Due to the interaction of flow and pressure compensation this package has not the "ideal" control characteristic. The deviation is caused by the pilot valves characteristic.

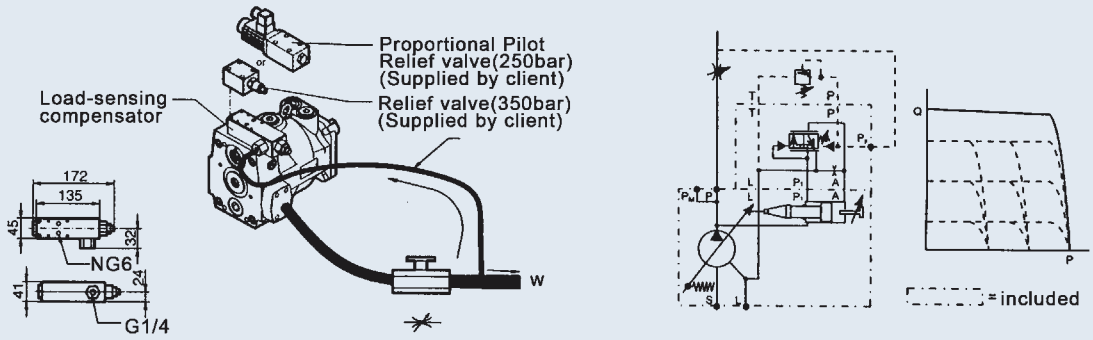

HJ: 2-valve load-sensing compensator

If a more accurate pressure compensation is required, the 2-valve load-sensing compensator code HJ can be used. The circuit diagram of this version is shown left. Here the interaction of the two control functions is avoided by using two separate control valves for flow and pressure compensation. The 2-valve compensator is equipped with an interface NG6 on the compensators top side.

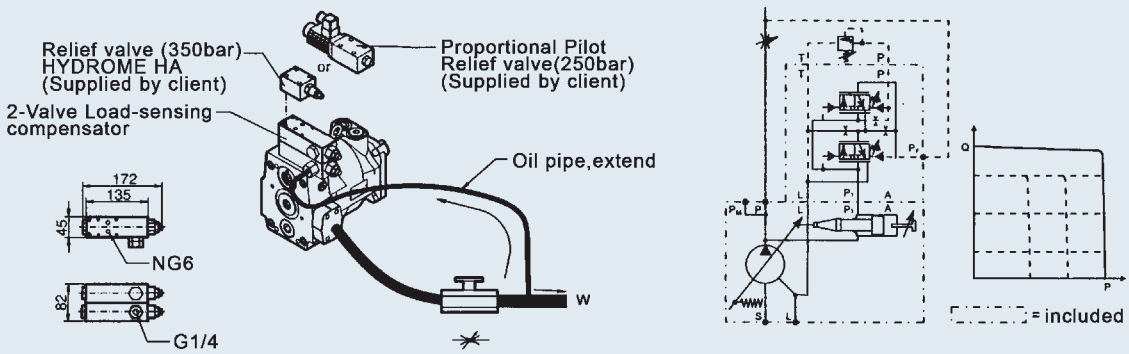

PV SERIES AXIAL PISTON PUMP

Compensator

HA: 2-valve load-sensing compensator (valve included)

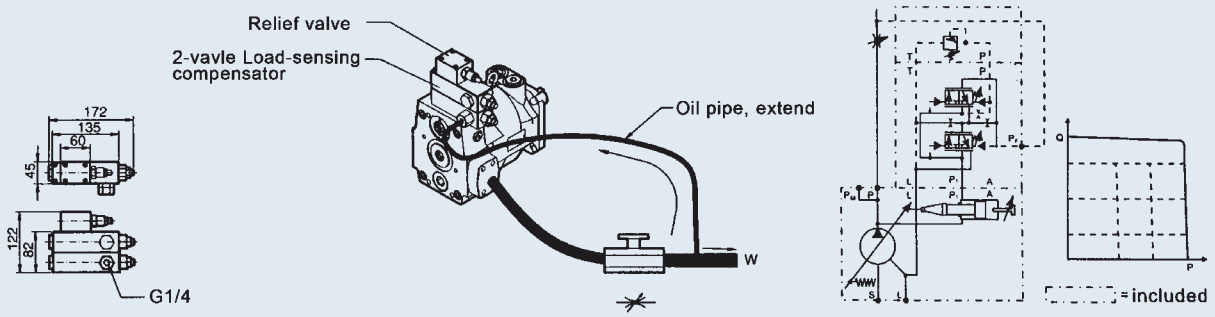

The hydraulic-mechanical horse power compensator consists of a modified remote pressure compensator (Code PG* 、PM*) or of a modified load-sensing compensator (Code PH*) and a pilot valve. This pilot valve is integrated into the pump and is adjusted by a cam sleeve. The cam sleeve has a contour that is designed and machined for the individual displacement and the nominal horse power setting.
At a large displacement the opening pressure (given by the cam sleeve diameter) is lower than at small displacements. This makes the pump compensate along a constant horse power (torque) curve.

For all nominal powers of standard electrical motors HYDROME offers a dedicated cam sleeve. The exchange of this cam sleeve (e. g. : to change horse power setting) can easily be done without disassembly of the pump.
On top of that an adjustment of the horse power setting can be done within certain limits by adjustment the preload of the pilot control cartridge spring.
That allows an adjustment of a constant horse power setting for other than the nominal speeds (1500min-1) or for other horse power.

PA: Horse power compensator

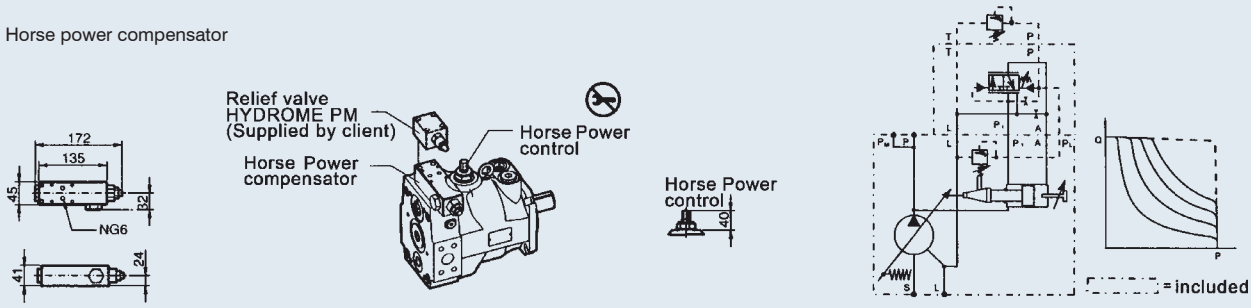

PM: Horse power compensator, pilot flow internal pressure pilot valve included

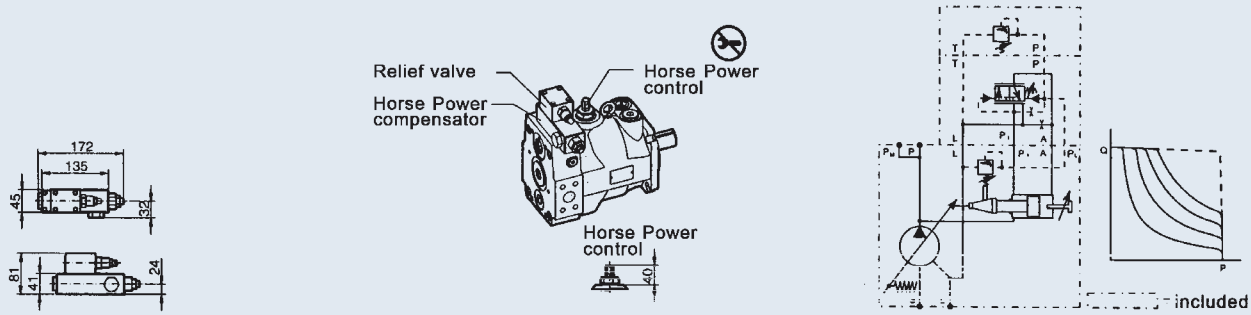

Compensator

PG: Horse power compensator, pilot flow internal

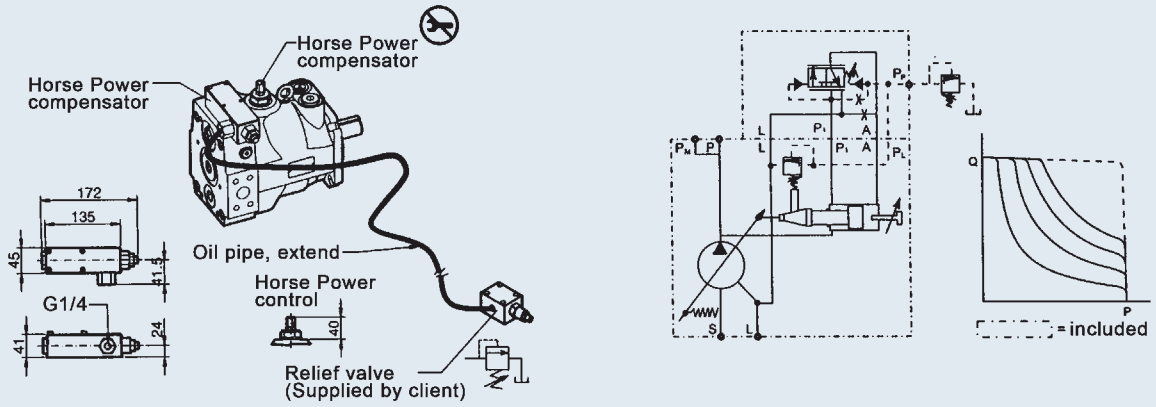

PL: Horse power compensator, Load-sensing compensator

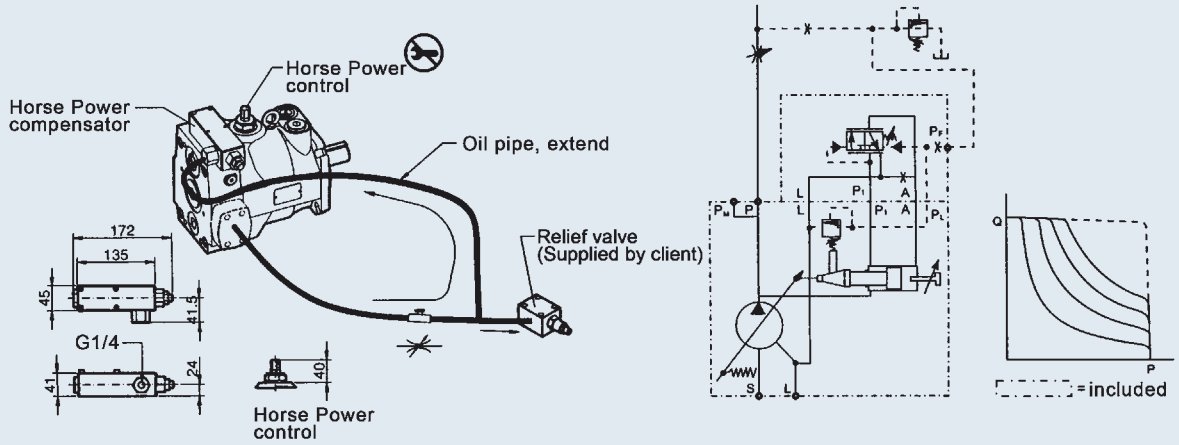

PH: Horse power compensator, pilot flow external for load-sensing

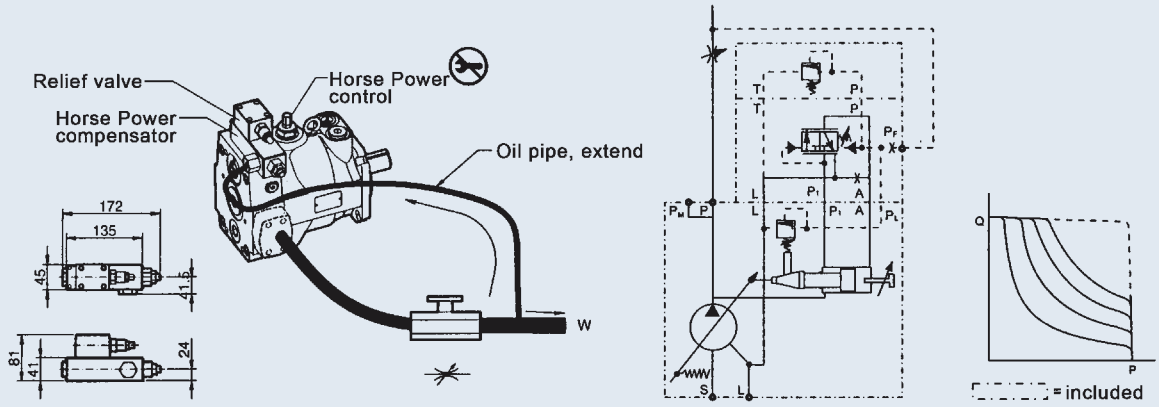

PV SERIES AXIAL PISTON PUMP

Performance curves

B

Horse Power Compensator, diagrams

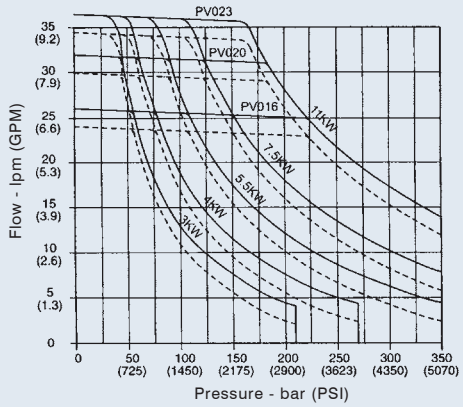

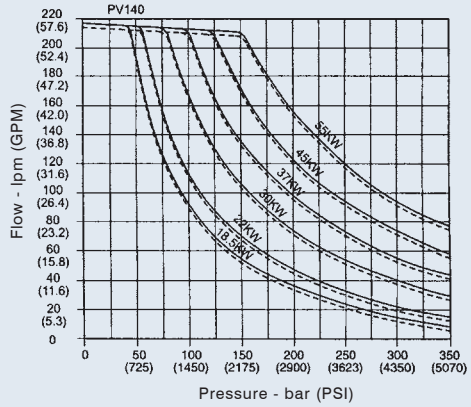

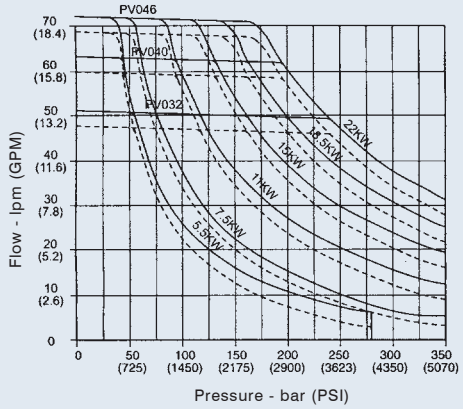

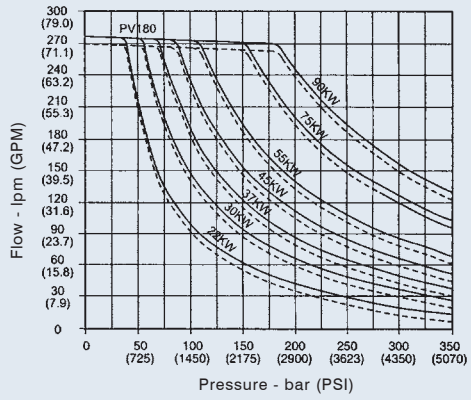

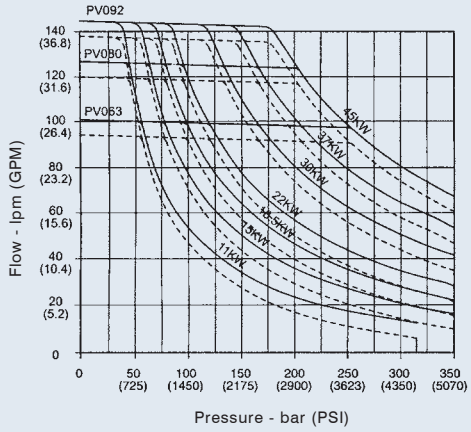

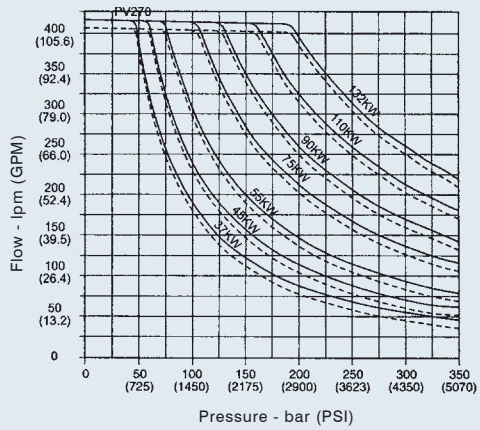

The diagrams shown are only valid for the following working conditions:
speed:n=1500(- -)and 1800(—)rev/min
temperature:t=50℃
fluid:mineral oil HLP, ISO VG46
viscosity:v=46mm/s at 40℃

PV SERIES AXIAL PISTON PUMP

Efficiency And Case Drain Flows PV016-PV023

The efficiency and power graphs are measured at an input speed of n = 1500 min^{-1}, a temperature of 40˚C and a fluid viscosity of 46 mm^2/s. Case drain flow and compensator control flow leave via the drain port of the pump. To the valves shown are to be added 1 to 1.2 lpm, if at pilot operated compensator (code G*, H* horse power compensator and P/Q-control) the control flow of the pressure pilot valve also goes through the pump.
Please note: The valves shown below are only valid for static operation. Under dynamic conditions and at rapid compensator of the pump the volume displaced by the servo piston also leaves the case drain port.
This dynamic control flow can reach up to 40 lpm.
Therefore the case drain line is to lead to the reservoir at full size and without restrictions at short and direct as possible.

Performance curves

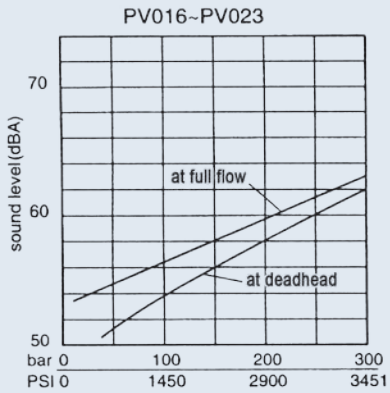

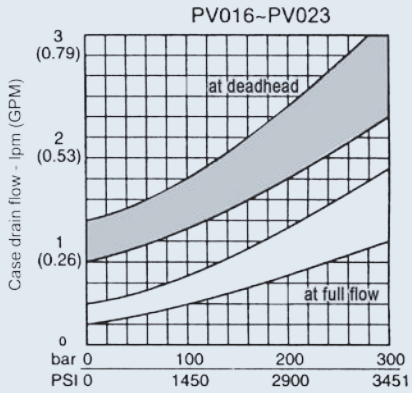

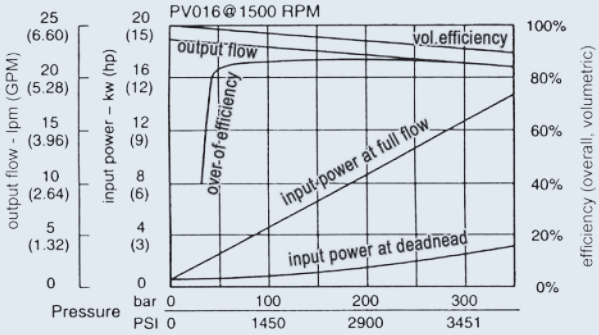

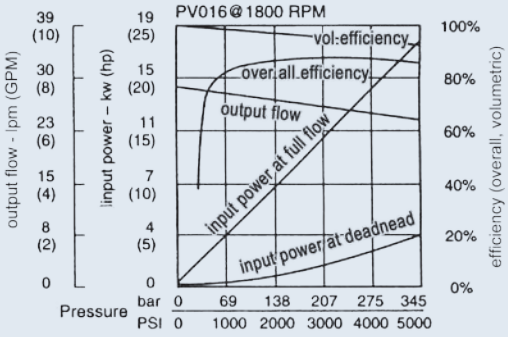

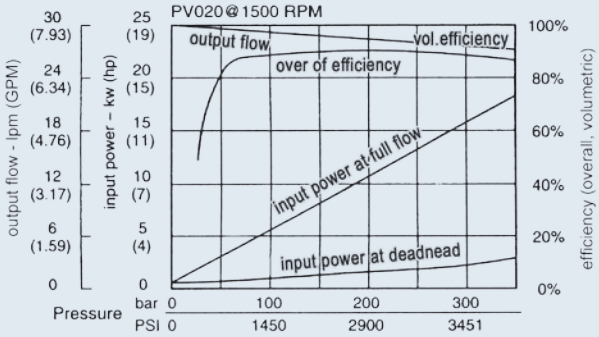

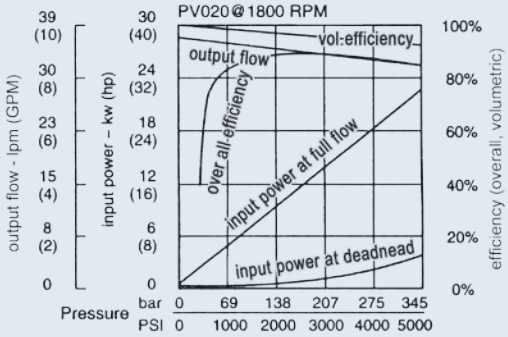

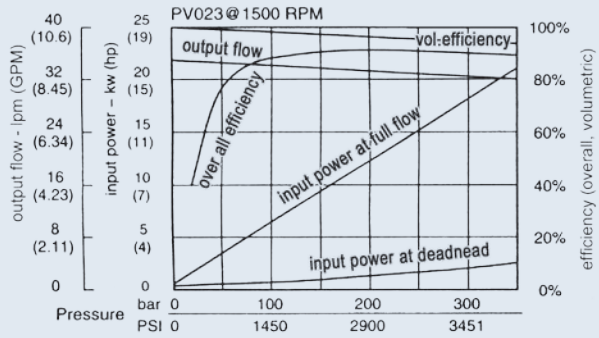

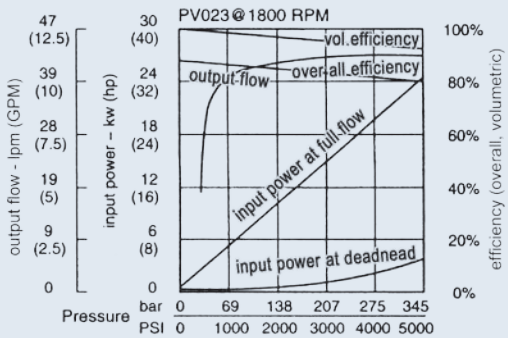

PV SERIES AXIAL PISTON PUMP

Efficiency And Case Drain Flows PV032-PV046

The efficiency and power graphs are measured at an input speed of n = 1500 min^{-1}, a temperature of 40°C and a fluid viscosity of 46 mm^2/s. Case drain flow and compensator control flow leave via the drain port of the pump. To the valves shown are to be added 1 to 1.2 lpm, if at pilot operated compensator (code G*,H* horse power compensator and P/Q-control) the control flow of the pressure pilot valve also goes through the pump.
Please note: The valves shown below are only valid for static operation. Under dynamic conditions and at rapid compensator of the pump the volume displaced by the servo piston also leaves the case drain port.
This dynamic control flow can reach up to 60 lpm.
Therefore the case drain line is to lead to the reservoir at full size and without restrictions at short and direct as possible.

Performance curves

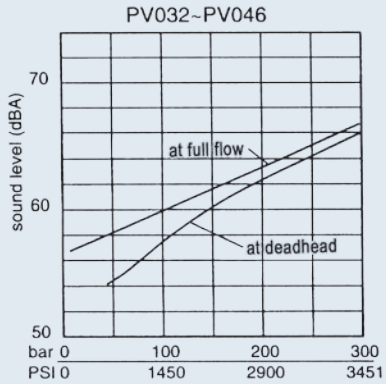

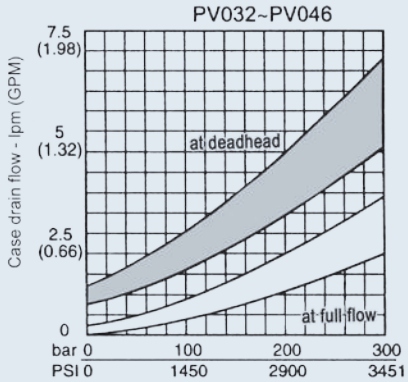

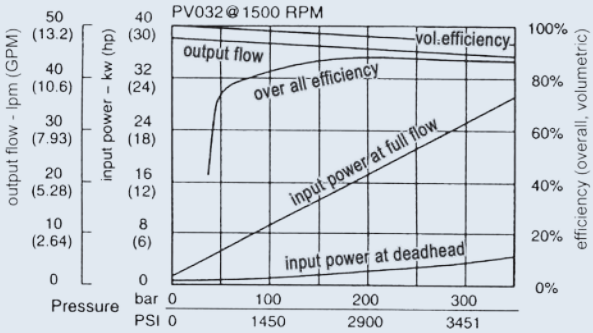

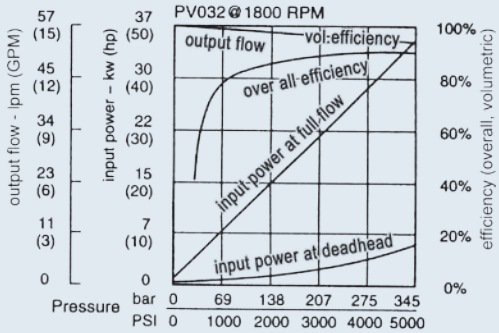

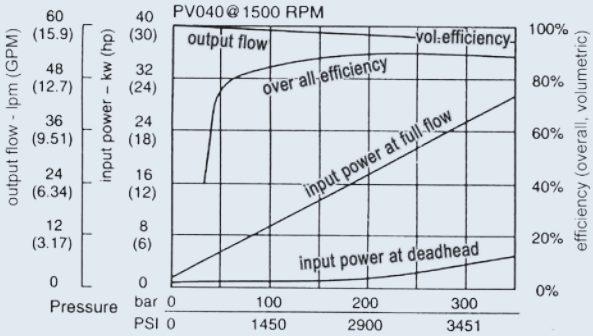

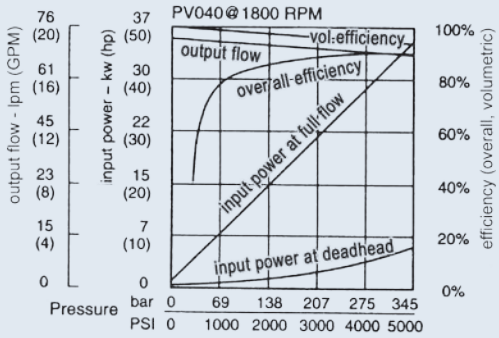

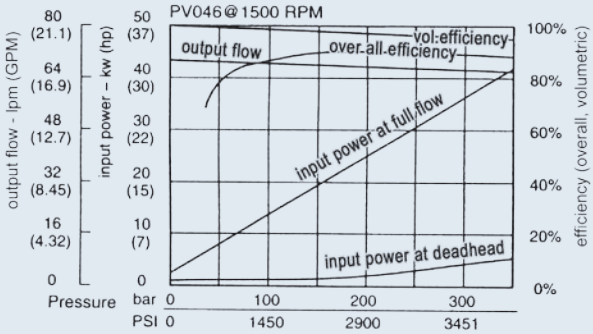

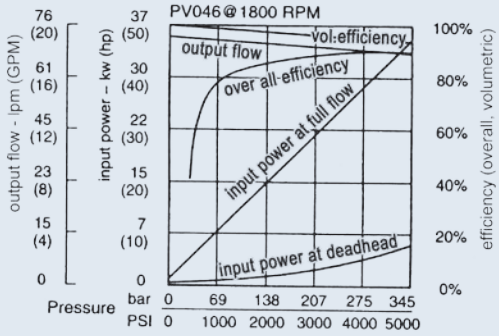

PV SERIES AXIAL PISTON PUMP

Efficiency And Case Drain Flows
PV063, PV080, PV092

The efficiency and power graphs are measured at an input speed of n = 1500 min^{-1}, a temperature of 40°C and a fluid viscosity of 46 mm^2/s. Case drain flow and compensator control flow leave via the drain port of the pump. To the valves shown are to be added 1 to 1.2 lpm, if at pilot operated compensator (code G*, H* horse power compensator and P/Q-control) the control flow of the pressure pilot valve also goes through the pump.
Please note: The valves shown below are only valid for static operation. Under dynamic conditions and at rapid compensator of the pump the volume displaced by the servo piston also leaves the case drain port.
This dynamic control flow can reach up to 80 lpm.
Therefore the case drain line is to lead to the reservoir at full size and without restrictions at short and direct as possible.

Performance curves

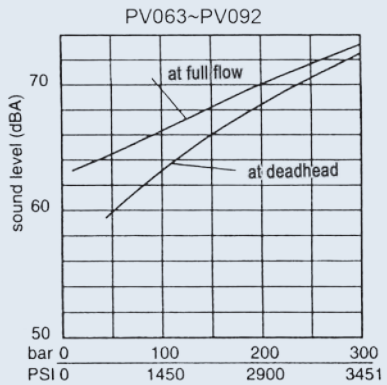

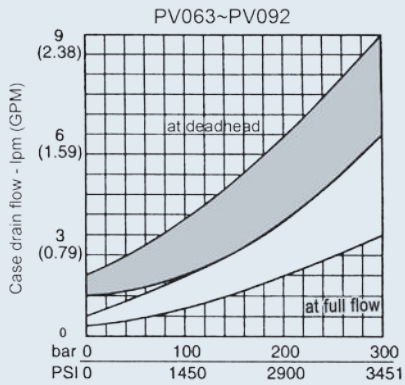

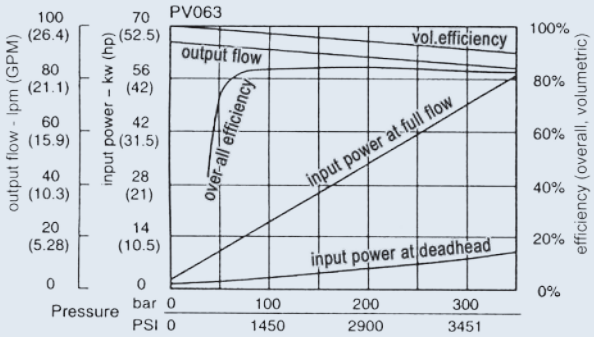

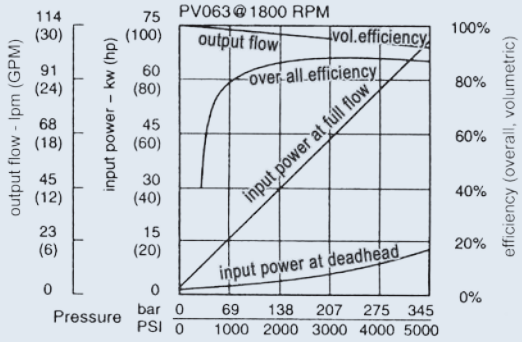

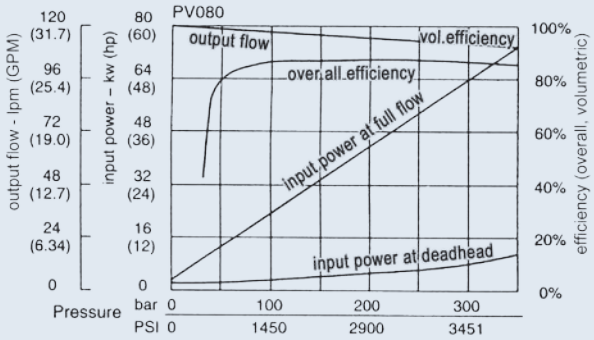

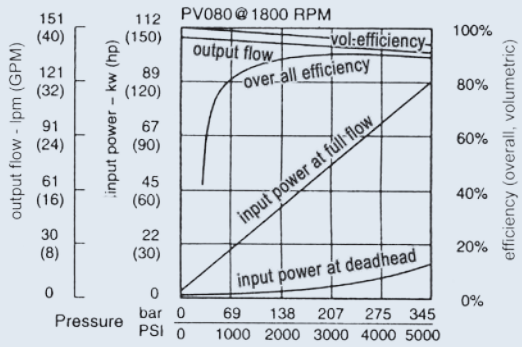

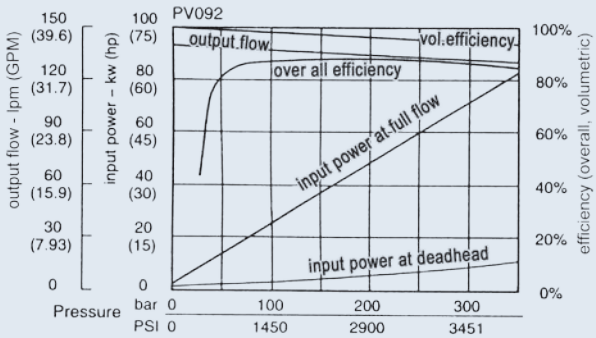

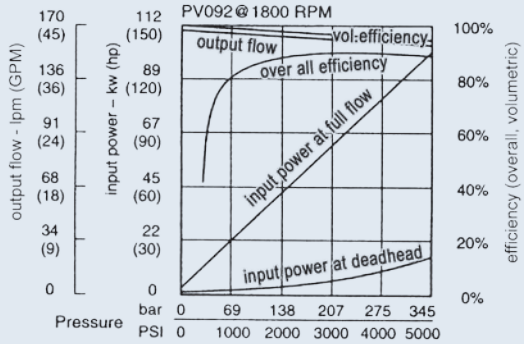

B

PV SERIES AXIAL PISTON PUMP

Efficiency And Case Drain Flows PV140, PV180

The efficiency and power graphs are measured at an input speed of n = 1500 min^{-1}, a temperature of 40°C and a fluid viscosity of 46 mm^2/s. Case drain flow and compensator control flow leave via the drain port of the pump. To the valves shown are to be added 1 to 1.2 lpm, if at pilot operated compensator (code G*, H* horse power compensator and P/Q-control) the control flow of the pressure pilot valve also goes through the pump.
Please note: The valves shown below are only valid for static operation. Under dynamic conditions and at rapid compensator of the pump the volume displaced by the servo piston also leaves the case drain port.
This dynamic control flow can reach up to 120 lpm.
Therefore the case drain line is to lead to the reservoir at full size and without restrictions at short and direct as possible.

Performance curves

B

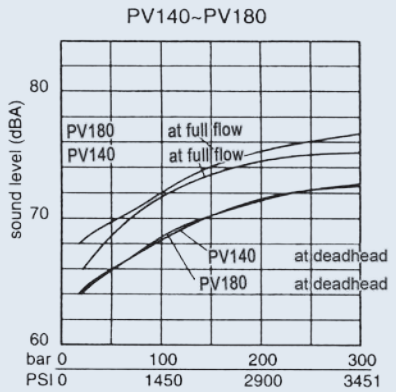

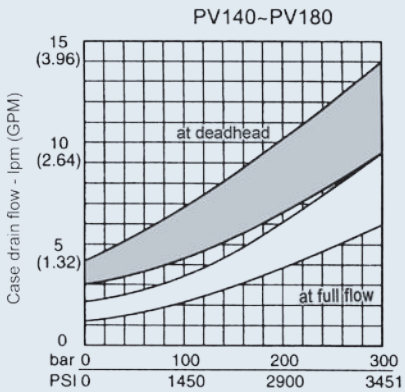

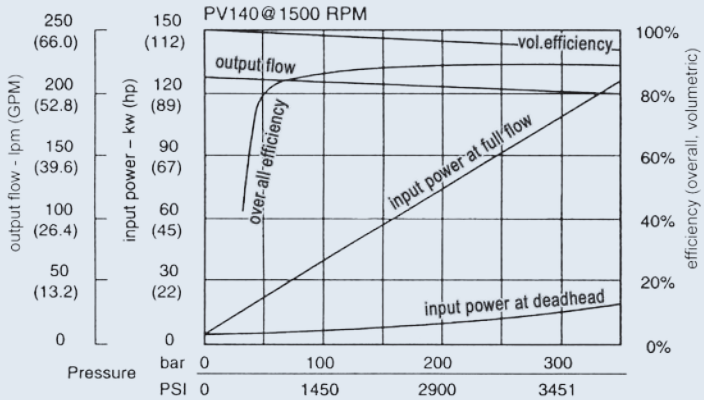

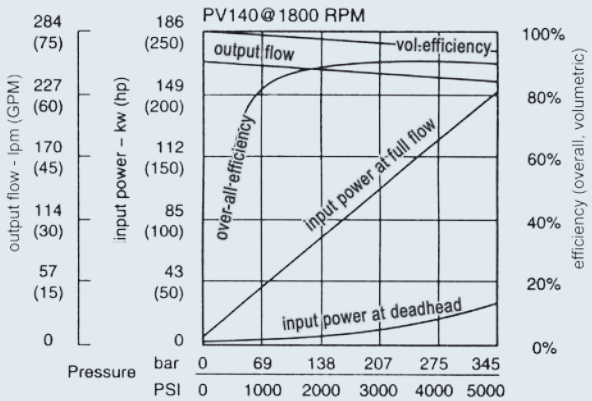

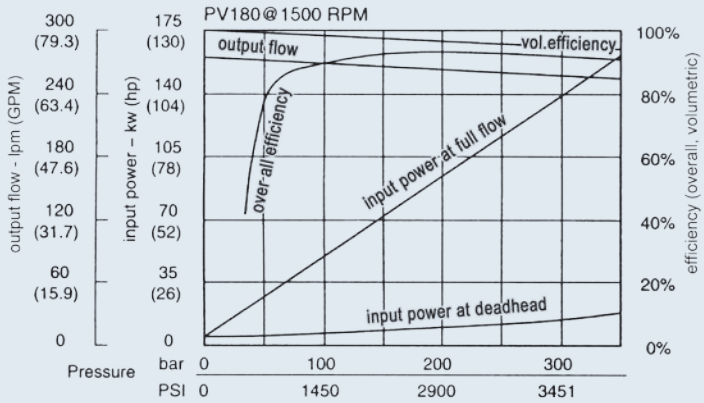

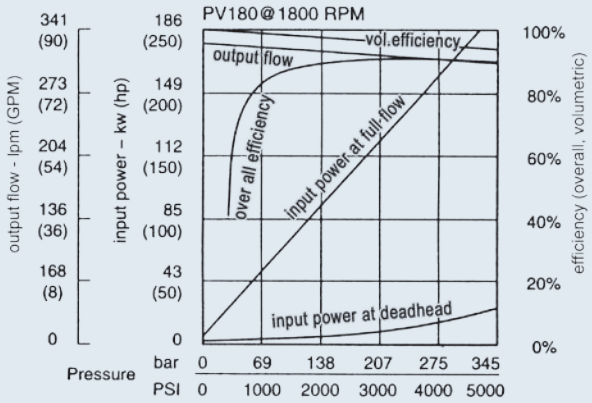

PV SERIES AXIAL PISTON PUMP

Efficiency And Case Drain Flows
PV270

The efficiency and power graphs are measured at an input speed of n = 1500 min^{-1}, a temperature of 40°C and a fluid viscosity of 46 mm^2/s. Case drain flow and compensator control flow leave via the drain port of the pump. To the valves shown are to be added 1 to 1.2 lpm, if at pilot operated compensator (code G*, H* horse power compensator and P/Q-control) the control flow of the pressure pilot valve also goes through the pump.
Please note: The valves shown below are only valid for static operation. Under dynamic conditions and at rapid compensator of the pump the volume displaced by the servo piston also leaves the case drain port.
This dynamic control flow can reach up to 120 lpm.
Therefore the case drain line is to lead to the reservoir at full size and without restrictions at short and direct as possible.

Performance curves

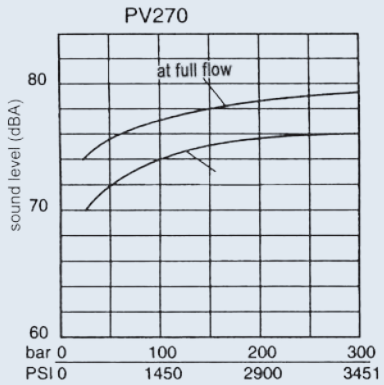

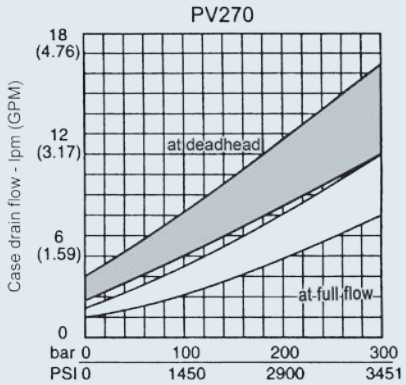

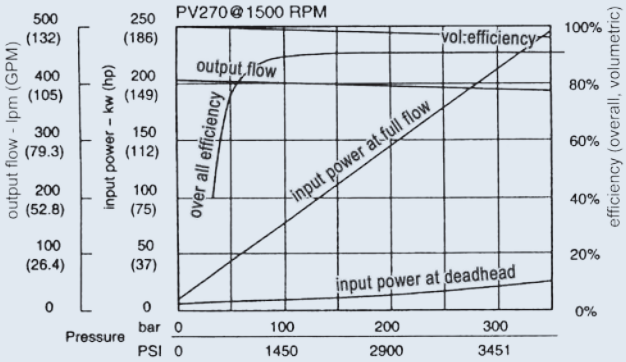

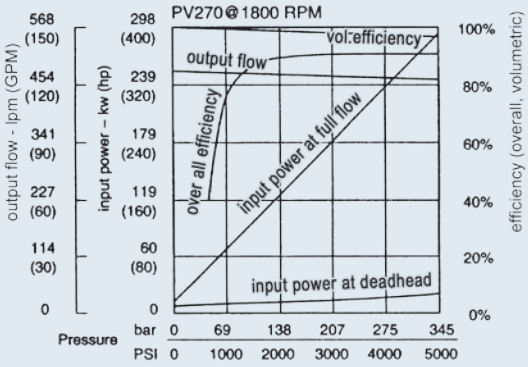

Pump Accessories

Bell housing, coupling and foot flange

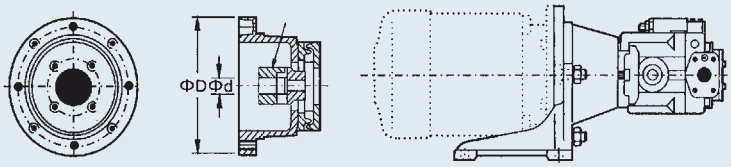

Welding flange, Threaded flange

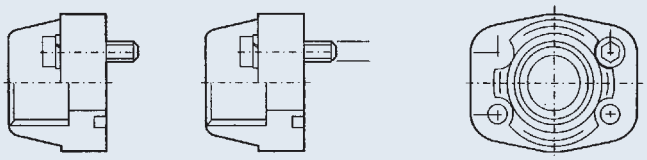

SAE-flange connections, pipe connection in accordance to DIN-2353

Elbow SAE-flange conncetion WFS

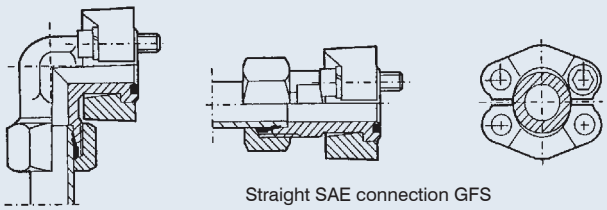

Straight SAE connection GFS

PV SERIES AXIAL PISTON PUMP

Dimensions

PV016~PV023

Mounting: M,N

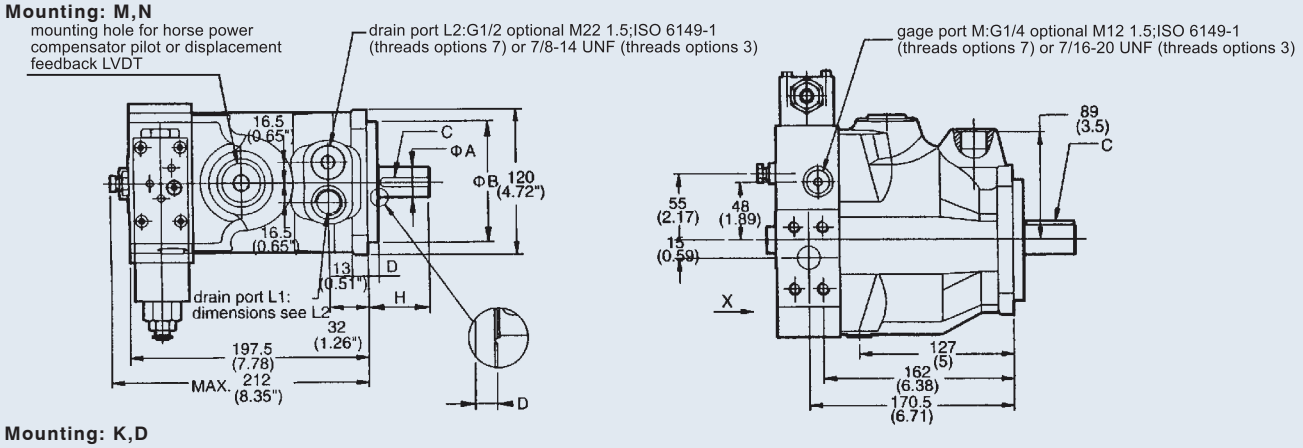

Mounting: K,D

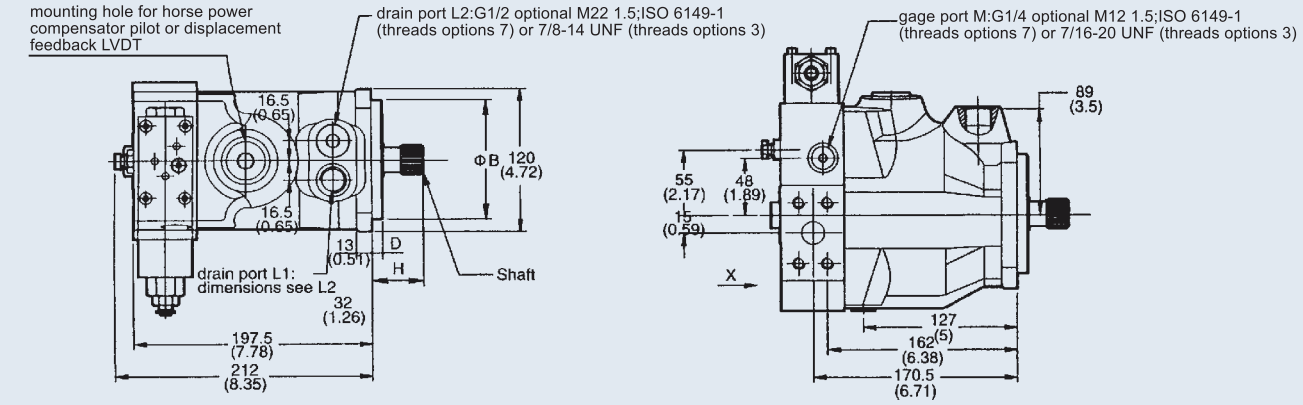

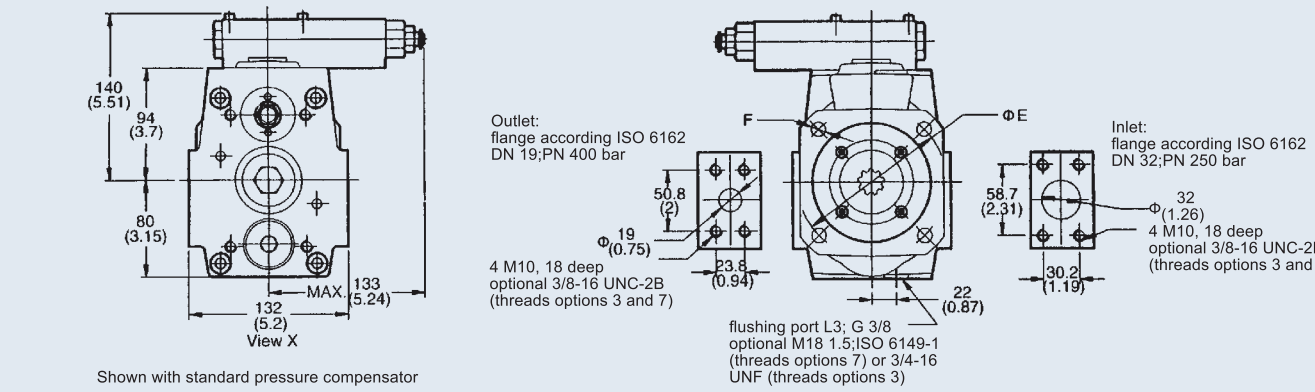

Shown with standard pressure compensator

PV016~PV023 Dimensions

Mounting			øA	øB	C	D	øE	F	H
M (standard)	Metric	ISO 3019/2 Splined, DIN 5480	ø25	ø100 h8	8x7x40	9	125	12	52
N	Inch	ISO3019/2 Cylindric, key	ø25.4 (1")	ø101.6 (4")	6.35x6.35x40 (1/4")	9.4 (0.37")	127 (5")	12 (0.47")	50 (1.97")
Mounting			**Shaft**		**øB**	**D**	**øE**	**F**	**H**
K (standard)	Metric	ISO 3019/2 Cylindric, key	Splined W25x1.5x15x8f DIN 5480		ø100 h8	9	125	12	43
D	Inch	ISO 3019/1 Splined, SAE	Splined 15T 16/32 DP, flat root, side fit ANSI B92.1		ø101.6 (4")	9.4 (0.37")	127 (5")	12 (0.47")	46 (1.81")

PV SERIES AXIAL PISTON PUMP

Dimensions

PV032~PV046

Mounting: M,N

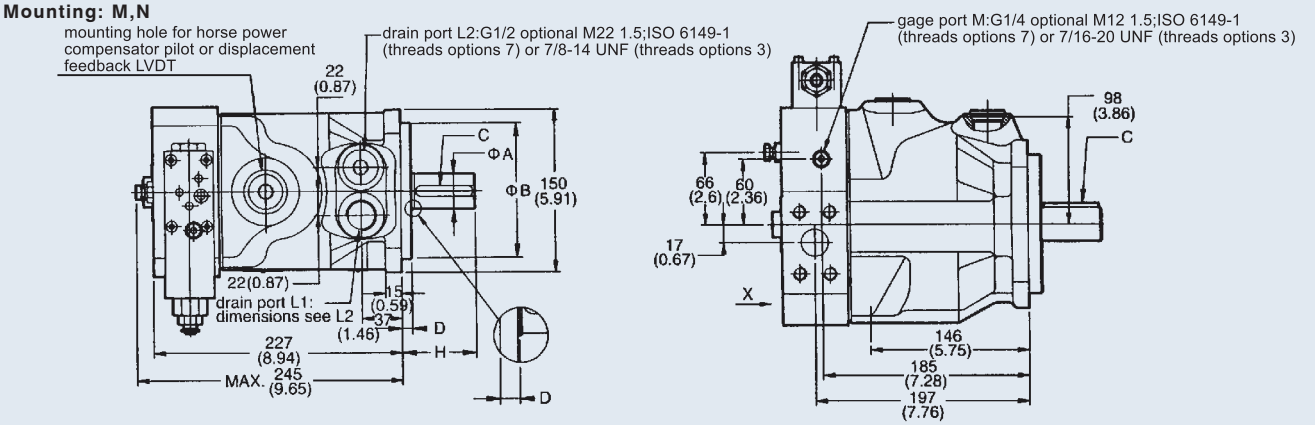

Mounting: K,D

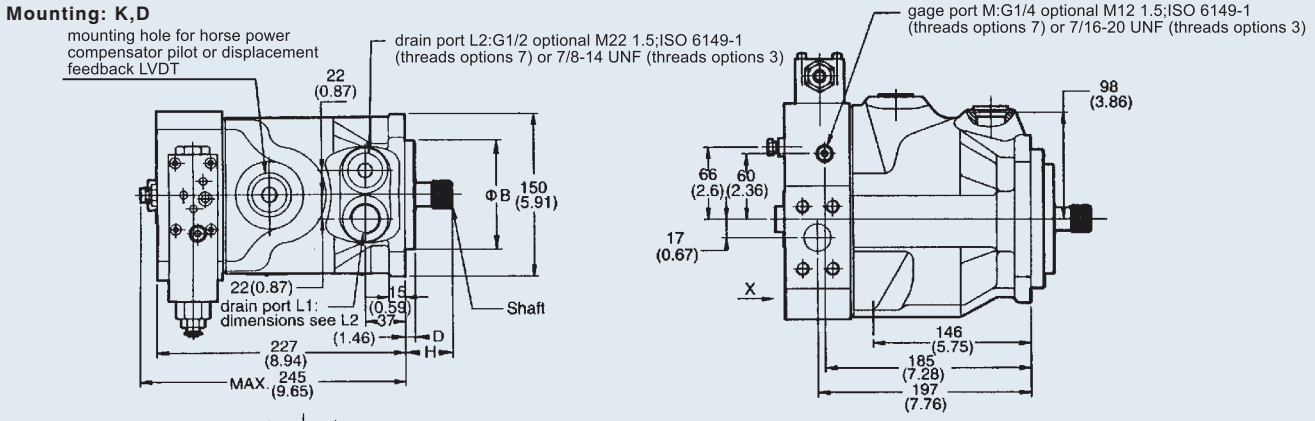

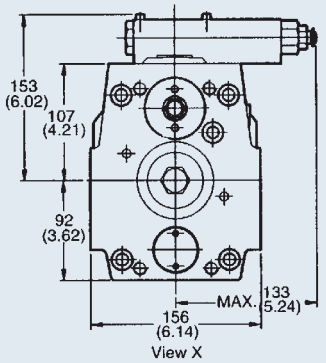

Shown with standard pressure compensator

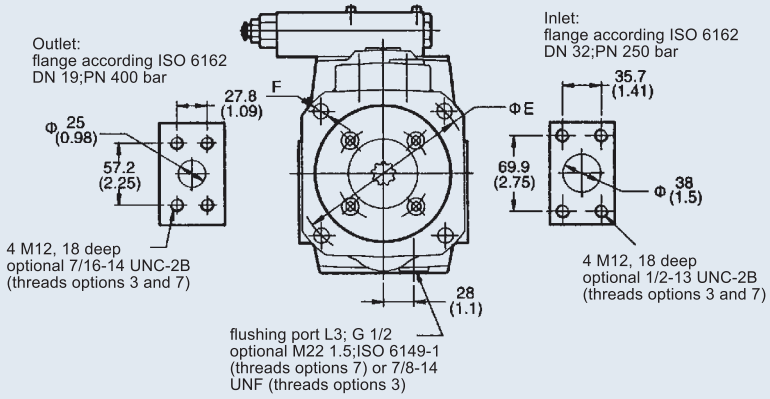

PV032~PV046 Dimensions

Mounting			øA	øB	C	D	øE	F	H
M (standard)	Metric	ISO 3019/2 Splined, DIN 5480	ø32	ø125 h8	10x8x56	9	160	14	68
N	Inch	ISO 3019/2 Cylindric, key	ø31.75 (1.25")	ø127 (5")	7.94x7.94x56 (5/16")	12.7 (0.5")	161.93 (6.38")	14 (0.55")	68 (2.68")
Mounting			**Shaft**		**øB**	**D**	**øE**	**F**	**H**
K (standard)	Metric	ISO 3019/2 Cylindric, key	Splined W32x1.5x20x8f DIN 5480		ø125 h8	9	160	14	47
D	Inch	ISO 3019/1 Splined, SAE	Splined 14T 12/24 DP, flat root, side fit ANSI B92.1		ø127 (5")	12.7 (0.5")	161.93 (6.38")	14 (0.55")	56 (2.31")
D1	Inch	ISO 3019/1 Splined, SAE	Splined 15T 16/32 DP, flat root, side fit ANSI B92.1		ø127 (5")	12.7 (0.5")	161.93 (6.38")	14 (0.55")	56 (2.31")

PV SERIES AXIAL PISTON PUMP

Dimensions

PV063~PV092

Mounting: M,N

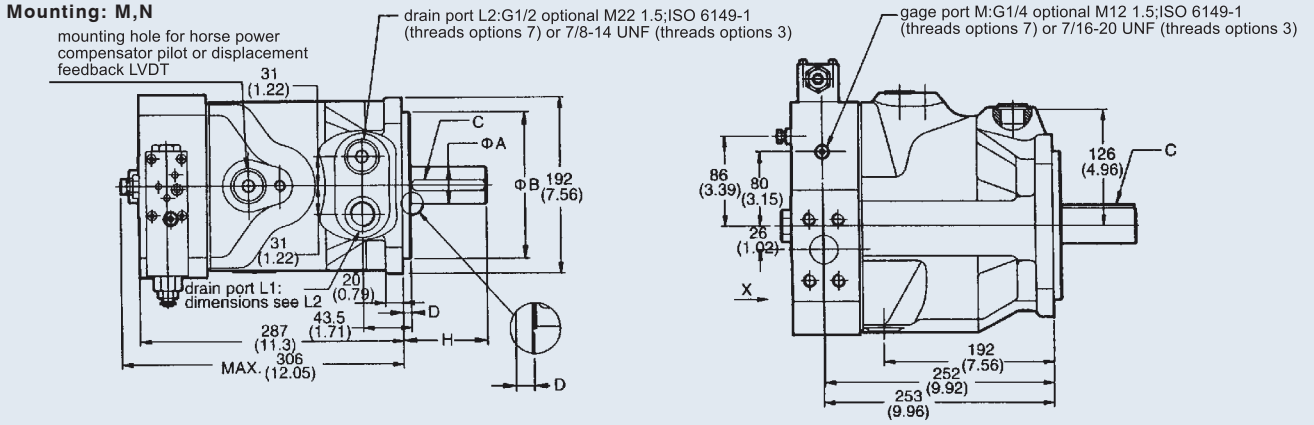

Mounting: K,D

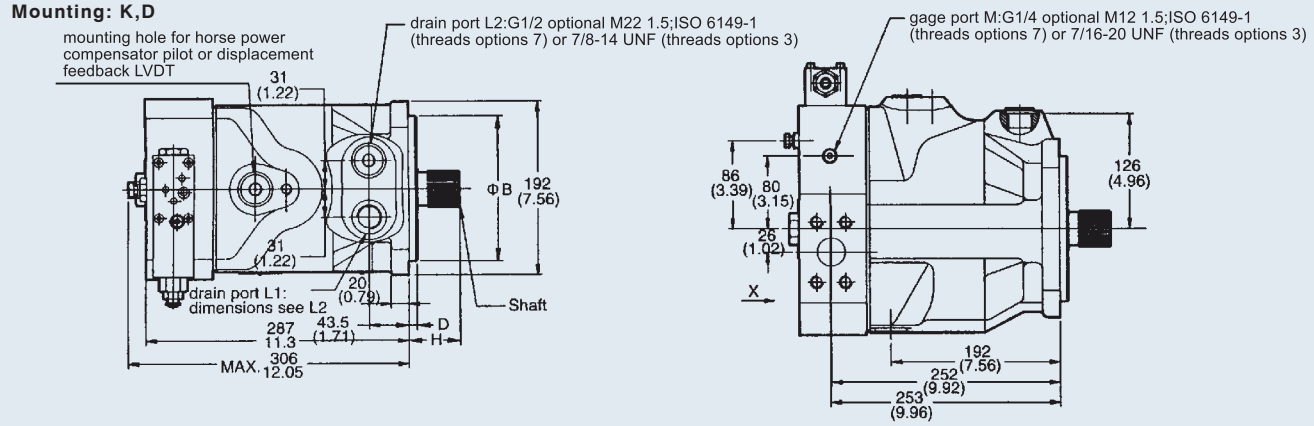

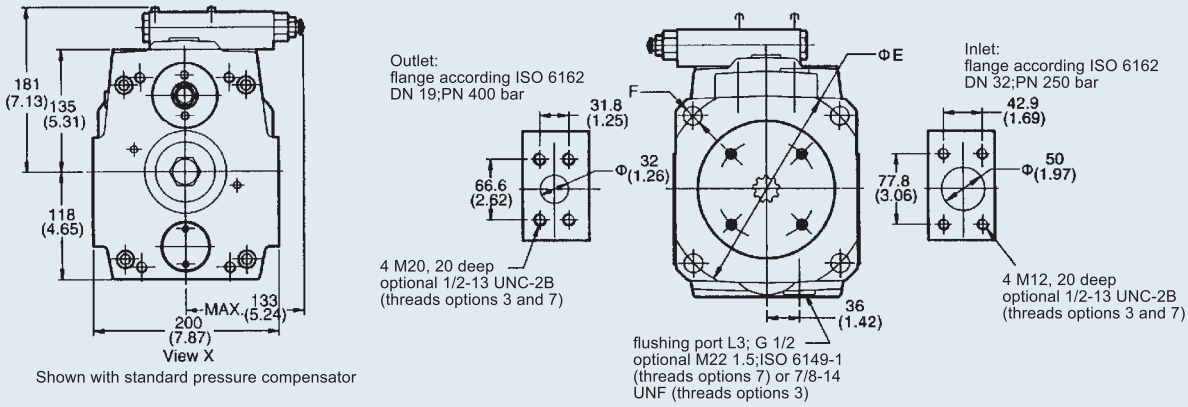

Shown with standard pressure compensator

PV063~PV092 Dimensions

Mounting			øA	øB	C	D	øE	F	H
M (standard)	Metric	ISO 3019/2 Splined, DIN 5480	ø40	ø160 h8	12x8x80	9	200	18	92
N	Inch	ISO 3019/2 Cylindric, key	ø44.45 (1.75")	ø152.4 (6")	11.11x11.11x80 (7/16")	12.7 (0.5")	228.6 (9")	20.6 (0.81")	90 (3.54")
Mounting			**Shaft**		**øB**	**D**	**øE**	**F**	**H**
K (standard)	Metric	ISO 3019/2 Cylindric, key	Splined W40x1.5x25x8f DIN 5480		ø160 h8	9	200	18	56
D	Inch	ISO 3019/1 Splined, SAE	Splined 15T 16/32 DP, flat root, side fit ANSI B92.1		ø152.4 (6")	12.7 (0.5")	228.6 (9")	20.6 (0.81")	75 (2.95")

PV SERIES AXIAL PISTON PUMP

Dimensions

PV140~PV180

Mounting: M,N

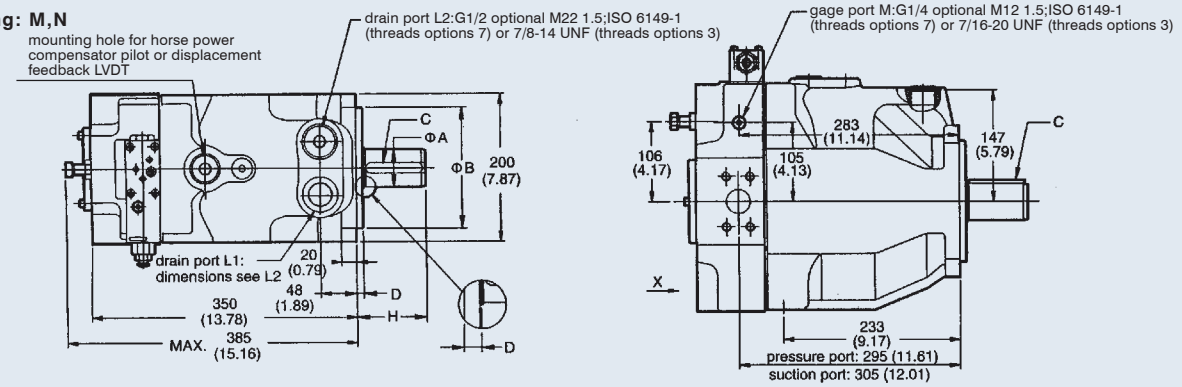

Mounting: K,D

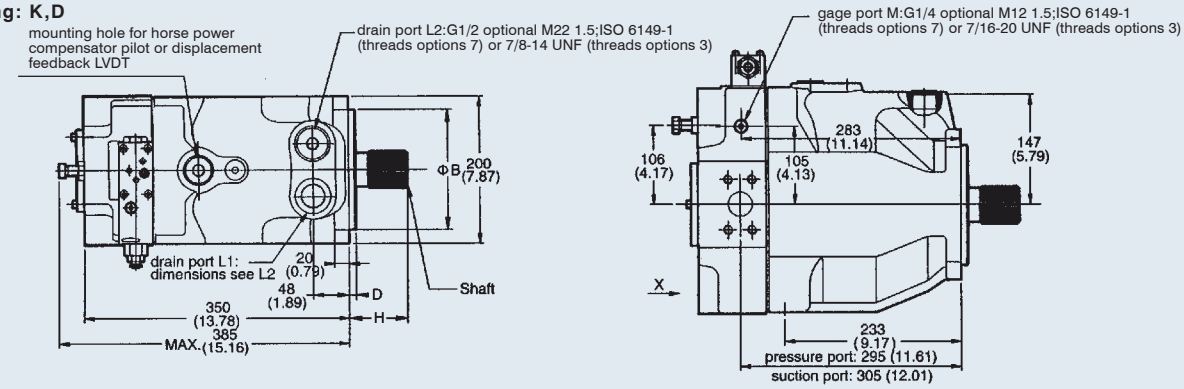

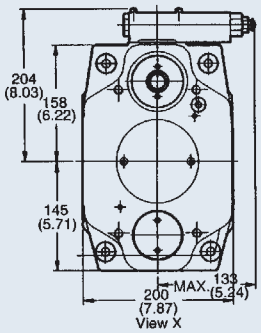

Shown with standard pressure compensator

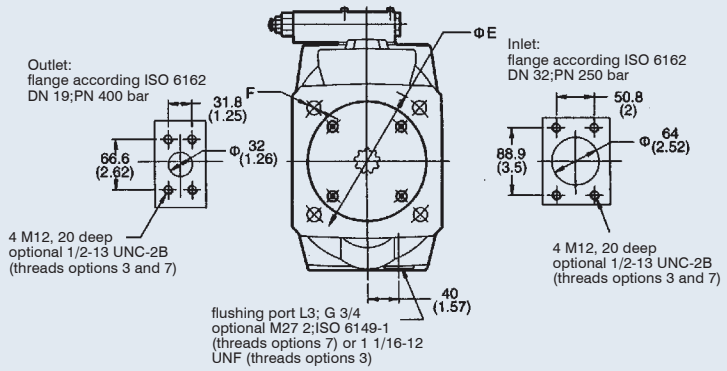

PV140~PV180 Dimensions

Mounting			øA	øB	C	D	øE	F	H
M (standard)	Metric	ISO 3019/2 Splined, DIN 5480	ø50	ø160 h8	14x9x75	9	200	18	92
N	Inch	ISO 3019/2 Cylindric, key	ø50.8 (2")	ø152.4 (6")	12.7x12.7x75 (1/2")	12.7 (0.5")	228.6 (9")	20.6 (0.81")	99.4 (3.91")
F	Inch	ISO 3019/2 Splined, DIN 5480	ø44.45	ø152.4 (6")	11.11x11.11	12.7 (0.5")	228.6 (9")	20.6 (0.81")	75 (2.95")
Mounting			**Shaft**	**øB**		**D**	**øE**	**F**	**H**
H (standard)	Metric	ISO 3019/2 Cylindric, key	Splined W50x2x24x8f DIN 5480	ø160 h8		9	200	18	78
D	Inch	ISO 3019/1 Splined, SAE	Splined 15T 8/16 DP, flat root, side fit ANSI B92.1	ø152.4 (6")		12.7 (0.5")	228.6 (9")	20.6 (0.81")	88 (3.46")
G	Inch	ISO 3019/1 Splined, SAE	Splined 13T 8/16 DP, flat root, side fit ANSI B92.1	ø152.4 (6")		12.7 (0.5")	228.6 (9")	20.6 (0.81")	75 (2.95")

PV SERIES AXIAL PISTON PUMP

Dimensions

PV270

Mounting: M,N

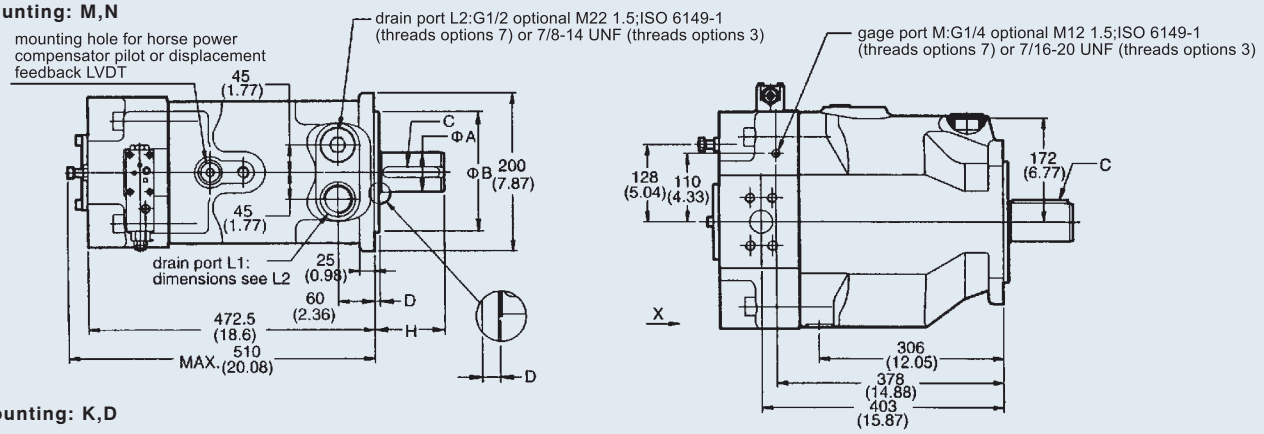

Mounting: K,D

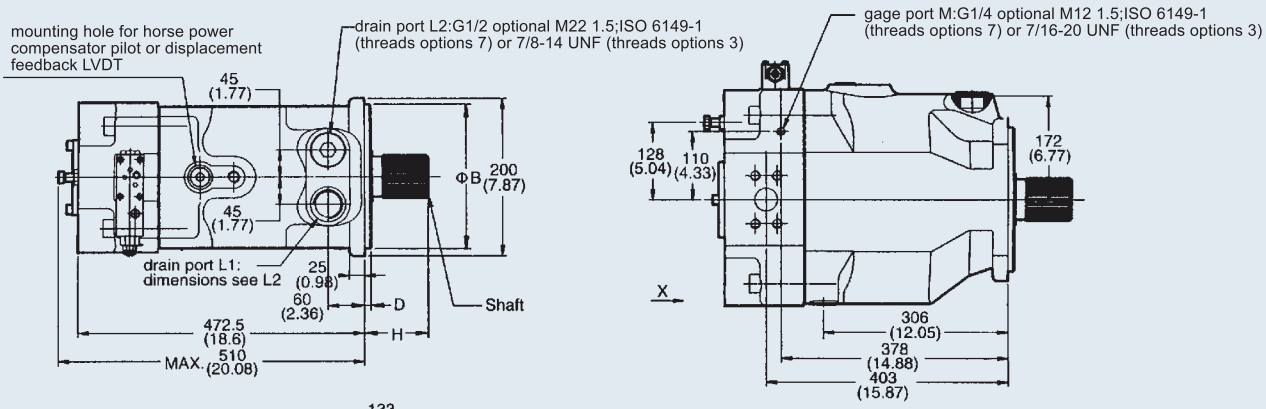

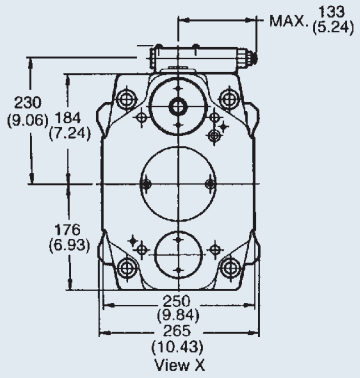

Shown with standard pressure compensator

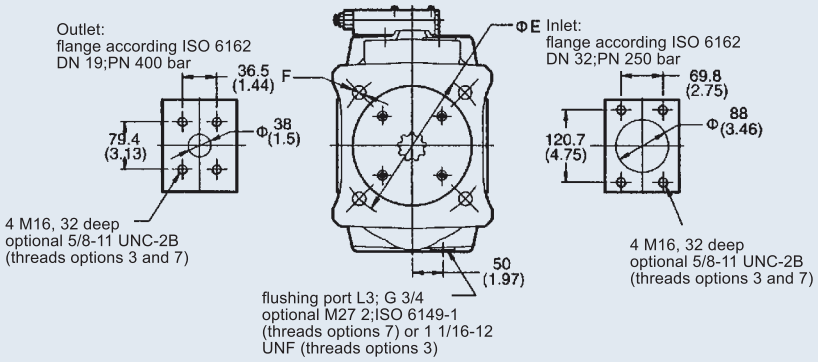

PV270 Dimensions									
Mounting			øA	øB	C	D	øE	F	H
M (standard)	Metric	ISO 3019/2 Splined, DIN 5480	ø65	ø200 h8	18x11x98	9	250	22	115
N	Inch	ISO 3019/2 Cylindric, key	ø50.8 (2")	ø165.1 (6.5")	12.7x12.7x75 (1/2")	15.9 (0.37")	317.5 (12.5")	20.6 (0.81")	97.5 (3.84")
Mounting			Shaft		øB	D	øE	F	H
K (standard)	Metric	ISO 3019/2 Cylindric, key	Splined W60x2x28x8f DIN 5480		ø200 h8	9	250	22	80
D	Inch	ISO 3019/1 Splined, SAE	Splined 15T 8/16 DP, flat root, side fit ANSI B92.1		ø165.1 (6.5")	15.9 (0.37")	317.5 (12.5")	20.6 (0.81")	88(3.46")

Thru drive, shaft load limitations

The max. transferable torque in Nm for the different shafts options are:

Shaft code	PV16~23	PV32~46	PV63~92	PV140~180	PV270
N	300	550	1320	2000	2000
D	300	610	1218	2680	2680
F	-	-	-	1320	-
G	-	-	-	1640	-
M	300	570	1150	1900	2850
K	405	675	1400	2650	3980

B

Important notice

The max. allowable torque of the individual shaft must not be exceeded. For 2-pump combinations there is no problem because PV series offers 100% thru torque. For 3-pump combinations (and more) the limit torque could be reached or exceeded.
Therefore it is necessary to calculate the torque factor and compare it with the allowed torque limit factor in the table.

Required: calculated torque factor <torque limit factor

To make the necessary calculations easier and more user friendly it is not required to calculate actual torque requirements in Nm and compare them with the shaft limitations. The table on the right shows limit factors that include material specification, safety factors and conversion factors.

Pump	Shaft	Torque limit factor
PV016 ~ PV023	N	17700
	D	17700
	M	17700
	K	20130
PV032 ~ PV046	N	32680
	D	36380
	M	33810
	K	40250
PV063 ~ PV092	N	77280
	D	72450
	M	67620
	K	83720
PV140 ~ PV180	N	118400
	D	158760
	F	78750
	G	97650
	M	113400
	K	157500
PV270	N	119000
	D	159700
	M	170100
	K	236250

The total torque factor is represented by the sum of the individual torque factors of all pumps in the complete pump combination.

Total torque factor of the comination= sum of individual torque factors of all pumps

The torque factor of each individual pump is calculated by multiplying the max. operating pressure p of the pump (in bar) with the max. displacement Vg of the pump (in cc/rev)

Torque factor of any pump=P x Vg (Pressure in bar x displacement in cc/rev)

PV SERIES AXIAL PISTON PUMP

Decomposition Chart

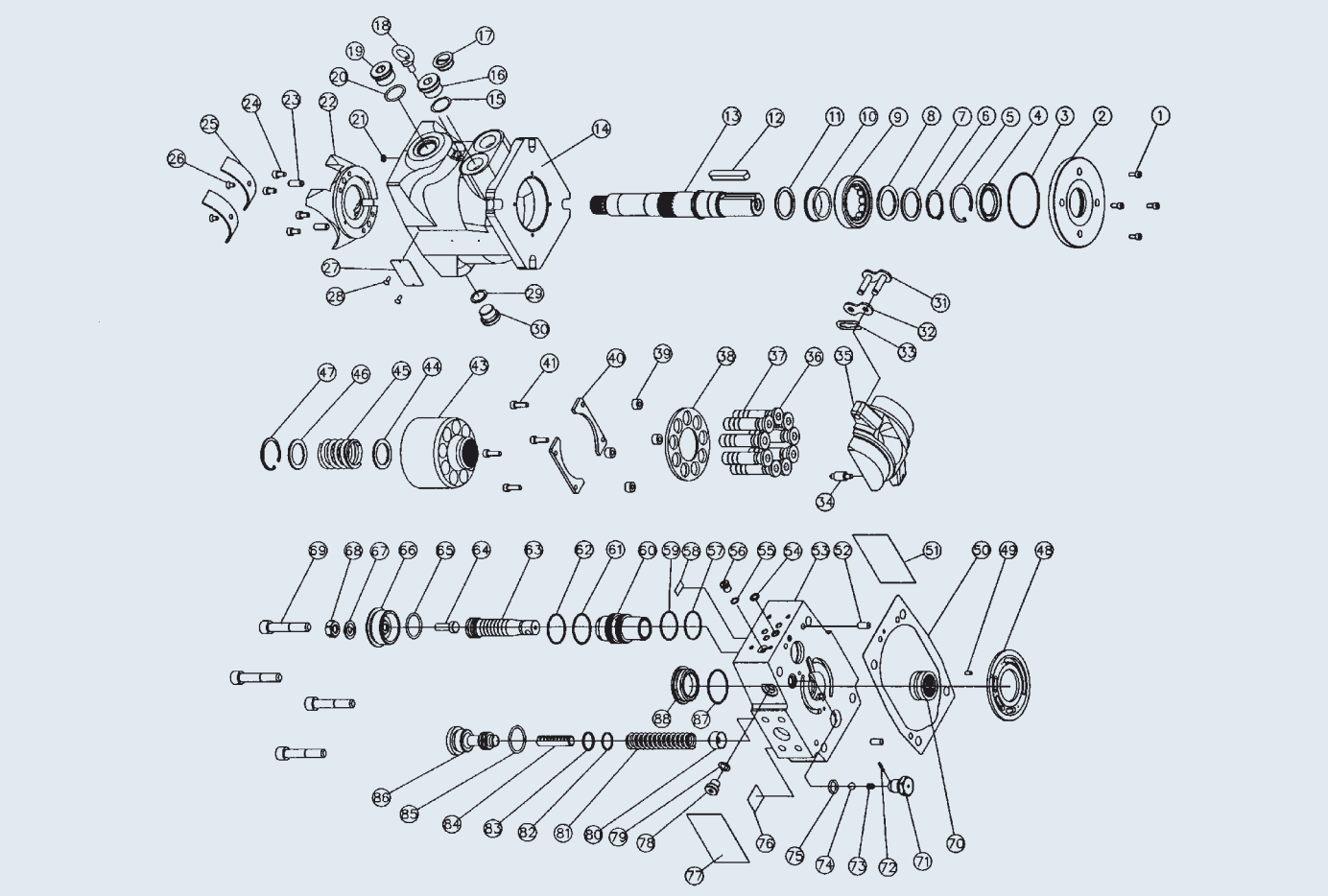

List of parts

No.	Description	Quantity	No.	Description	Quantity	No.	Description	Quantity	No.	Description	Quantity
1	Head cap screw	4	23	Pin	2	46	Washer	1	68	Piston nut	1
2	Pilot cover	1	24	Screw	4	47	Snap ring	1	69	Screw	1
3	O-ring	1	25	Trunnion bearing	2	48	Valve plate	1	70	Trunnion bearing	1
4	Shaft seal	1	26	Screw	2	49	Pin	1	71	Plug	1
5	Snap ring	1	27	Name plate	1	50	Seal	1	72	Pin	1
6	Snap ring	1	28	Rivet	2	51	Seal	1	73	Spring	1
7	Washer	1	29	O-ring	1	52	Pin	1	74	Ball	1
8	Washer	1	30	Plug	1	53	Pump body	2	75	O-ring	2
9	Roller bearing	1	31	Chain link	1	54	O-ring	1	76	Label	1
10	Roller bearing	1	32	Chain link	1	55	O-ring	1	77	Seal	1
11	Roller bearing	1	33	Chain link	1	56	Plug	1	78	Plug	1
12	Key	1	34	Connector servo spring	1	57	O-ring	1	79	O-ring	1
13	Shaft	1	35	Swash plate	1	58	Label	1	80	Washer	1
14	Pump body	1	36	Piston	9	59	O-ring	1	81	Spring	1
15	O-ring	1	37	Piston	9	60	Servo pistion sleeve	1	82	O-ring	1
16	Plug	1	38	Slipper segment	1	61	O-ring	1	83	O-ring	1
17	Plug	1	39	Washer	4	62	O-ring	1	84	Pin	1
18	Ring	1	40	Retainer segment	2	63	Servo piston	1	85	O-ring	1
19	Plug	1	41	Screw	4	64	Set screw	1	86	Screw	1
20	O-ring	1	43	Cylinder block	1	65	O-ring	1	87	O-ring	1
21	O-ring	1	44	Washer	1	66	Servo spring cover	1	88	Spring cover	1
22	Cradle	1	45	Spring	1	67	Washer	1			

PV SERIES AXIAL PISTON PUMP

General installation information

1. Fluid recommendations

Premium quality hydraulic mineral oil fluids are recommended, like H-LP oils to DIN 51524, part 2. The viscosity range should be 25 to 50 s mm^2/(cst) at 50°C. Operating temperatures -10 to +70°C. For other fluids such as phosphoric acid esters or for, other operating conditions consult HYDROME for assistance.

2. Seals

NBR (Nitrile) seals are used for operation with hydraulic fluids based on mineral oil. For synthetic, as perhaps phosphoric acid esters, Fluorocarbon seals are required. Consult HYDROME for assistance.

3. Filtration

For maximum pump and system component functionability and life, the system should be protected from contamination by effective filtration. Fluid cleanness should be in accordance with ISO classification ISO 4406. The quality of filter elements should be in accordance with ISO standards.

(1) Minimum requiremenet for filtration rate x (um):
General hydraulic systems for satisfactory operation:
Class 19/15, to ISO 4406. X=25 μm(ß10≥75) to ISO 4572

(2) Hydraulic systems with maximized component life and functionability:
Class 16/13, to ISO 4406. X=10 μm(ß10≥75) to ISO 4572
It is recommended to use return line or pressure filters. HYDROME Filter Division offers a wide range of these filters for all common applications and mounting styles. The use of suction filters should be avoided, especially with fast response pumps. Bypass filtration is a good choice for best filter efficiency.

4. Installation and mounting

Horizontal mounting: Outlet port side or top. Inlet port side or bottom, drain port always uppermost.
Vertical mounting: Shaft pointing upwards.
Install pump and suction line in such a way that the maximum inlet vacuum never exceeds 0.8 bar absolute.
The inlet line should be as short and as straight as possible. A short suction line cut to 45° is recommended when the pump is mounted inside the reservoir, to improve the inlet conditions. All connections to be leadfree, as air in the suction line will cause cavitations, noise, and damage to the pump.

5. Shaft rotation and alignment

Pump and motor shafts must be aligned within 0.25mm T.I.R. maximum. A floating coupling must be used.
Bell housings and couplings can be ordered at manufacturers listed in this catalogue. Please follow the coupling manufacturer's installation instructions.
Consult HYDROME for assistance on radial load type drives.

6. Start up

Prior to start up, the pump case must be filled with hydraulic fluid (use case drain port). Initial start up should be at zero pressure with an open circuit to enable the pump to prime. Pressure should only be increased once the pump has been fully primed.
Attention: Check motor rotation direction.
Operating noise of pumps
The normal operating noise of a pump and consequently the operating noise of the entire hydraulic system is largely determined by where and how the pump is mounted and how it is connected to the down stream hydraulic system. Also size, style and installation of the hydraulic tubing have a major influence on the overall noise emitted by a hydraulic system.

Noise reduction measures
Flexible elements help to prevent pump body vibration being transmitted to other construction elements, where possible amplification may occur, Such elements can be:
Bell housing with elastic dampening flange with vulcanized labyrinth ①

(1)Floating and flexible coupling ②

(2)Damping rails ③

(3)Or silent blocks for mounting the electric motor or the foot mounting flange

(4)Flexible tube connections (compensators) or hoses on inlet, outlet and drain port of the pump.

(5)Exclusive use of gas tight tube fittings for inlet connections to avoid ingression of air causing cavitations and excessive noise.

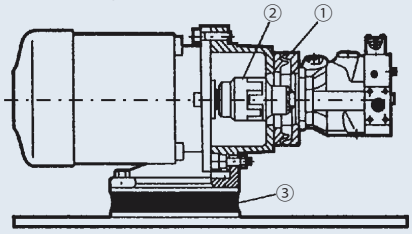

7. Drain line

The drain line must lead directly to the reservoir without restriction. The drain line must not be connected to any other return line. The end of the drain line must be below the lowest fluid level in the reservoir and as far away as possible from the pump inlet line. This ensures that the pump does not empty itself when not in operation and that hot aireated oil will not be recirculated. For the same reason, when the pump is mounted inside the reservoir, the drain line should be arranged in such a way that a siphon is created. This ensures that the according to the port size and a straight low pressure fitting with maximized bore should be used.

	PV016~PV023	PV032~PV046	PV063~PV092	PV140~PV180	PV270
Size of pipe joints	3/8 (ø8.5 or more)	1/2 (ø12 or more)	3/4 (ø16 or more)	1 (ø19 or more)	1-1/4 (ø22 or more)
I.D. of pipes	ø12 or more	ø15 or more	ø19 or more	ø25 or more	ø32 or more
Length of drain	Under 1m	Under 1m	Under 1m	Under 1m	Under 1m

PV SERIES TANDEM AXIAL PISTON PUMP

B

Dimensions

Pump Combination PV

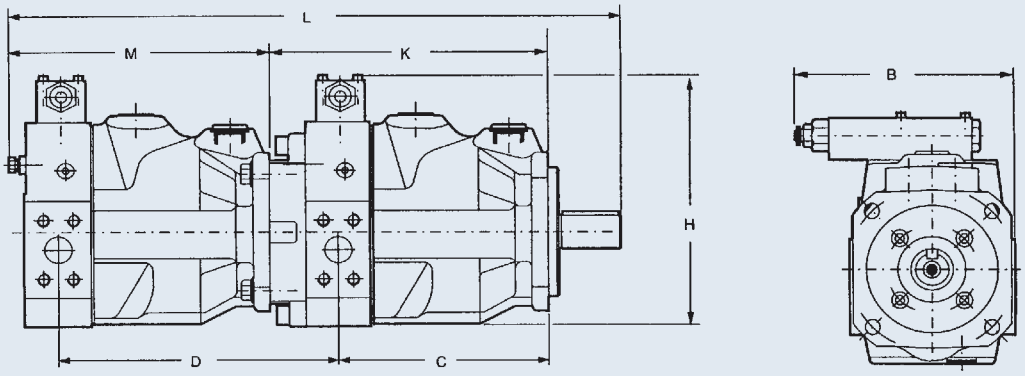

Main pump	Second pump	Interface main pump	L	B	C	D	H	K	M
PV16, 20, 23	PV16, 20, 23	100 B4 HW	489	196	170.5	225	220	225	212
PV32, 40, 46	PV16, 20, 23 PV32, 40, 46	125 B4 HW	541 574	208 208	197 197	235.5 261	245 245	261 261	212 245
PV63, 80, 92	PV16, 20, 23 PV32, 40, 46 PV63, 80, 92	160 B4 HW	630 663 724	232 232 232	252 252 252	244.5 271 326	299 299 299	326 326 326	212 245 306
PV140, 180	PV16, 20, 23 PV32, 40, 46 PV63, 80, 92 PV140, 180	160 B4 HW	719 752 813 878	230 230 230 230	305 305 305 305	280.5 307 362 415	349 349 349 349	415 415 415 415	212 245 306 385
PV270	PV16, 20, 23 PV32, 40, 46 PV63, 80, 92 PV140, 180 PV270	200 B4 HW	860 893 954 1033 1134	255 255 255 255 255	403 403 403 403 403	299 325.5 380.5 433.5 531.5	406 406 406 406 406	531.5 531.5 531.5 531.5 531.5	212 245 306 385 510

Combination PV140/180+PV140/180 and PV270+PV270 only with splined shaft on main pump due to high torque

PV pump with thru drive

List of parts

No.	Description
1	Connector
2	Coupling
3	Seal
4	Seal
5	Coupling

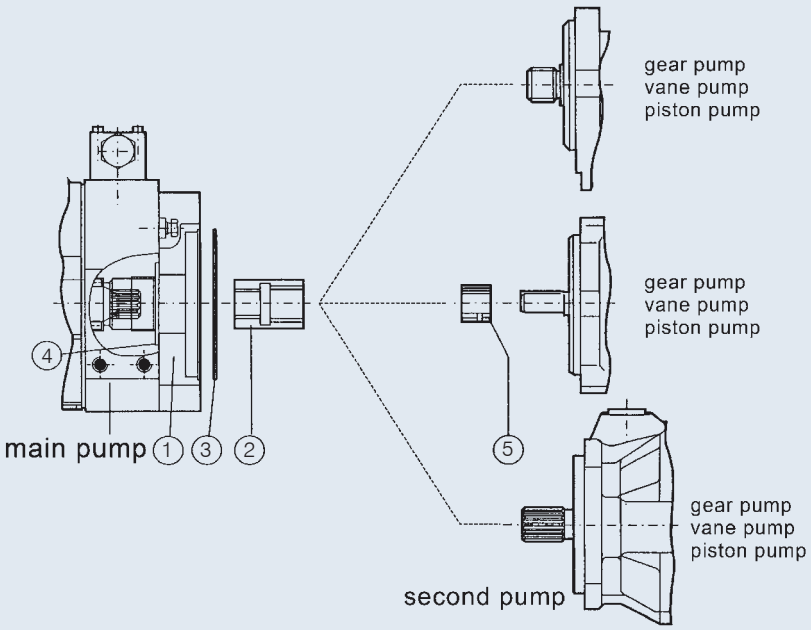

PVS, PZS SERIES VARIABLE VOLUME PISTON PUMP

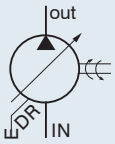

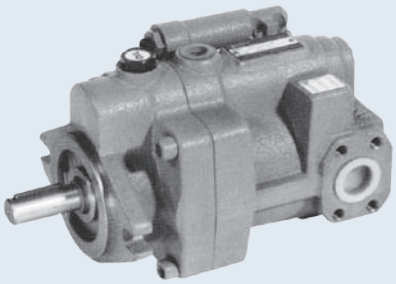

How to order

PVS - 1 B - 16 N 2 - R - ※
1 2 3 4 5 6 7 8

1	PVS: Pump size 0, 1, 2 PZS: Pump size 3, 4
2	Pump sizes: 0: 8 cc/rev 1: 16, 22 cc/rev 2: 36, 46 cc/rev 3: 70 cc/rev 4: 100 cc/rev
3	Mounting Type: B: Flange type (normal) A: Foot type
4	Displacement: 8, 16.5, 22, 36, 46, 70, 100 cc/rev
5	Control types standard type: N Option type: P, NQ, RS (RA), WS (WA), HL
6	Pressure adjusting PVS 0: 20-40 bar 1: 20-73 bar 2: 30-145 bar 3: 30-215 bar PZS 1: 20-73 bar 3: 30-215 bar 4: 30-286 bar
7	Shaft rotation (viewed from shaft end) R: Clockwise L: Counter clockwise
8	Shaft type none: Cylindric, key S: Splined, SAE

B

Specifications

Model	Displacement cc/rev	Unloading Conditions (lpm)			Pressure Adj. Range bar	Max . Pressure bar	Input Speed Range (rpm)		Weight (kg)
		1200 rpm	1500 rpm	1800 rpm			Min.	Max.	
PVS-0B-8	8	9.6	12	14.4	0: 20-40	255	500	2000	9
PVS-1B-16	16.5	19.8	24.7	29.7	1: 20-73				12
PVS-1B-22	22	26.4	33	39.6	2: 30-145				12
PVS-2B-35	36	43.2	54	64.8	3: 30-215				23
PVS-2B-45	46	55.2	69	82.8					23
PZS-3B-70	70	84	105	126	1: 20-73 3: 30-215 4: 30-286	286		1800	41
PZS-4B-100	100	120	150	180					60

Dimensions

PVS-0B-8N

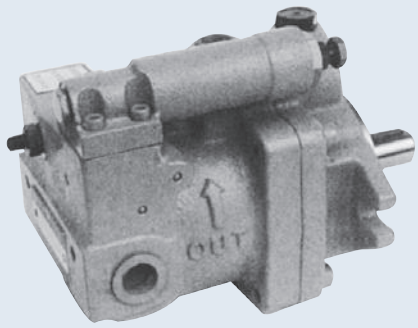

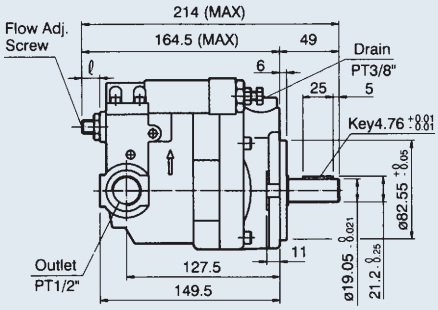

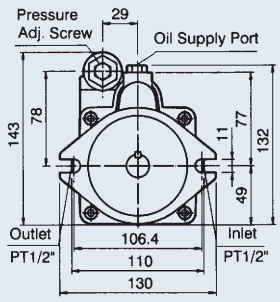

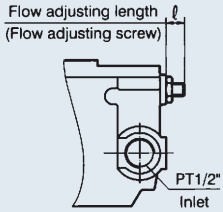

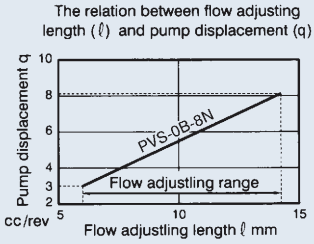

PVS, PZS SERIES VARIABLE VOLUME PISTON PUMP

Control Types

Type	External View	JIS Symbols	Characteristics	Description
N	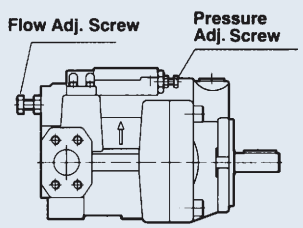	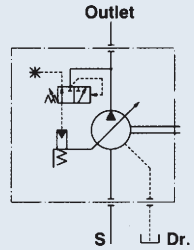	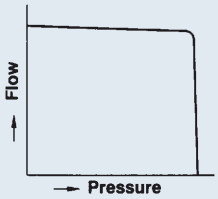	**Pressure Compensating Type (Manual)** 1. When the pressure reaches the value set with the compensator, the flow is reduced automatically and the set pressure is maintained. 2. The pressure and flow are controlled manually.
P	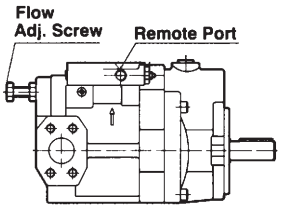	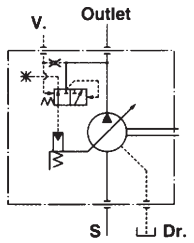	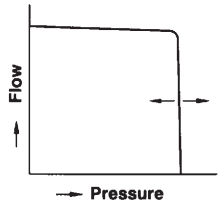	**Remote Pressure Control Type** 1. The pressure can be controlled according to the pilot pressure. 2. The flow can be controlled manually.
NQ	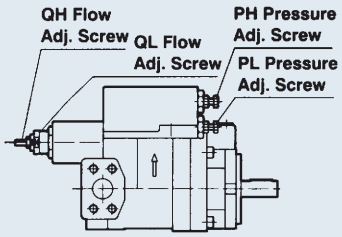	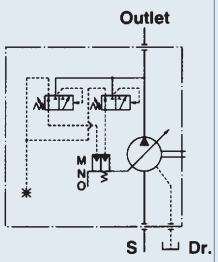	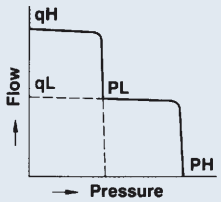	**Two Pressure-Two Flow Control Type** 1. By means of the sequence valve, two stage flow rate can be obtained and each flow rate has the different pressure eventually enabling energy savings.
RS (RA)	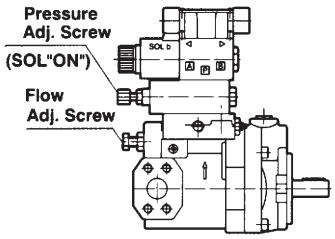	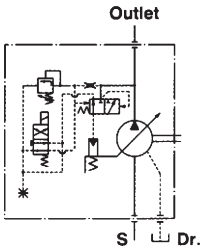	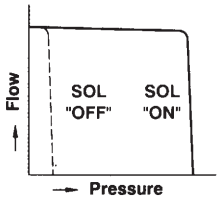	**Solenoid Cut-Off Control Type** 1. An unloading solenoid valve is used to minimize the lost energy when the pump output is not required. 2. Heat generated is very small.
WS (WA)	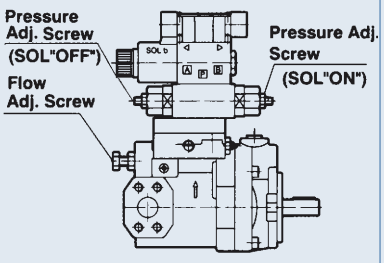	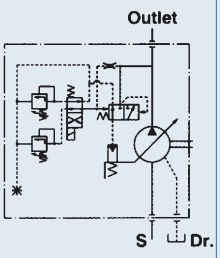	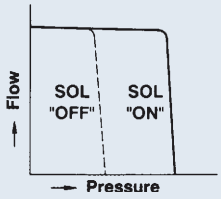	**Two Pressure Cut-Off Control Type** 1. By means of "ON" "OFF" control of solenoid valves, two different pressure compensating types can be obtained.
HL	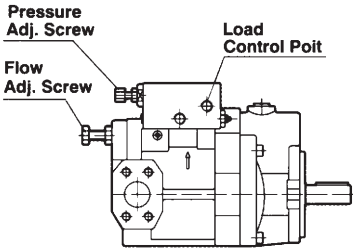	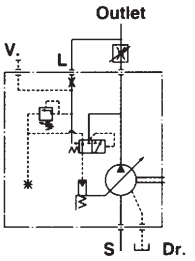	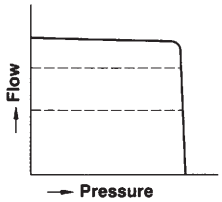	**Load Sensing Control** 1. The "HL" compensator is used for load sensing circuits and is a true load sensor. This is the "P" compensator with a pin in the compensator spool. The pin prevents pilot flow from entering the circuit which will eliminate creeping of the load. 2. The "HL" compensator will let the pump deliver a constant flow rate to the circuit by providing an adjustable ΔP across the customers orifice or valve. The pump will operate at 17.2~27.5 bar (250-400 psi) above "Load pressure".

B

Dimensions

PVS-1B-16N, PVS-1B-22N

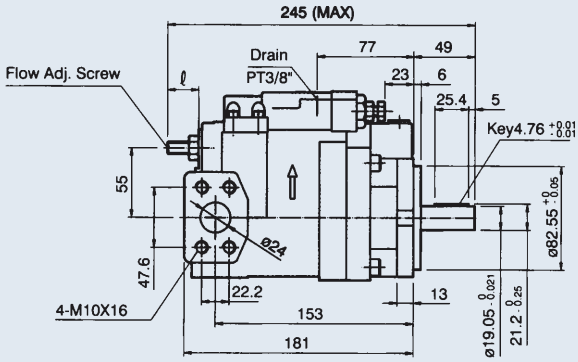

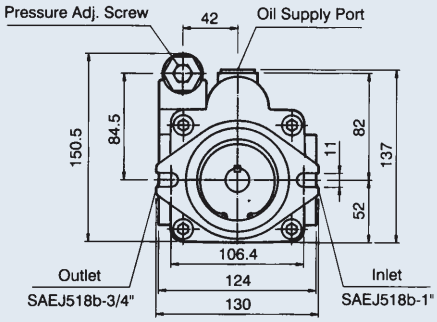

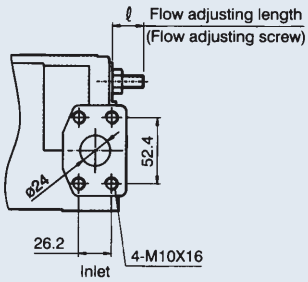

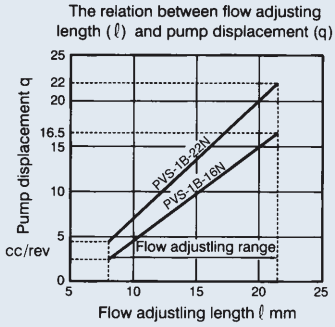

PVS-2B-35N, PVS-2B-45N

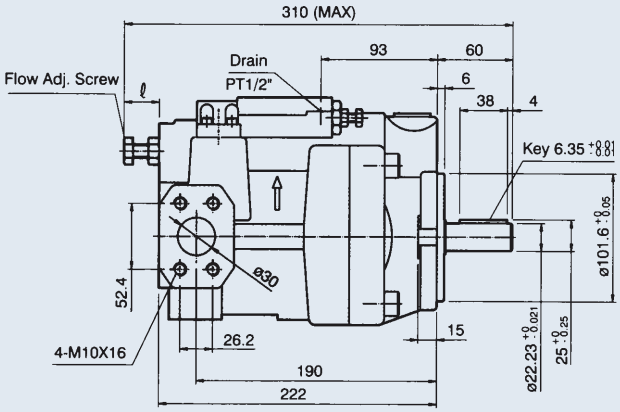

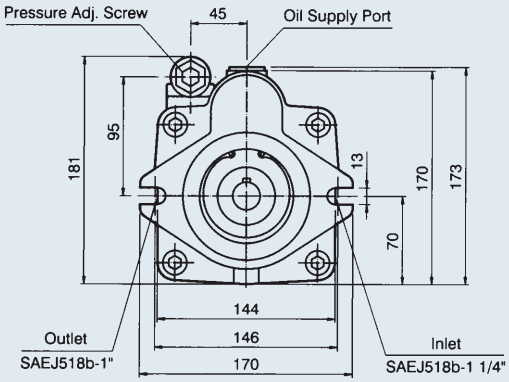

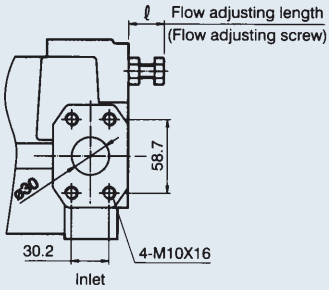

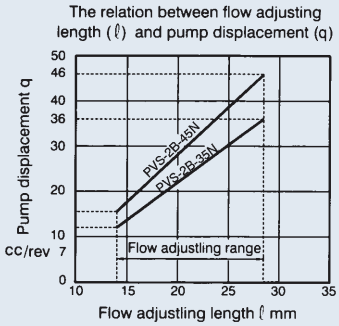

B

PVS, PZS SERIES VARIABLE VOLUME PISTON PUMP

Dimensions

PZS-3B-70N

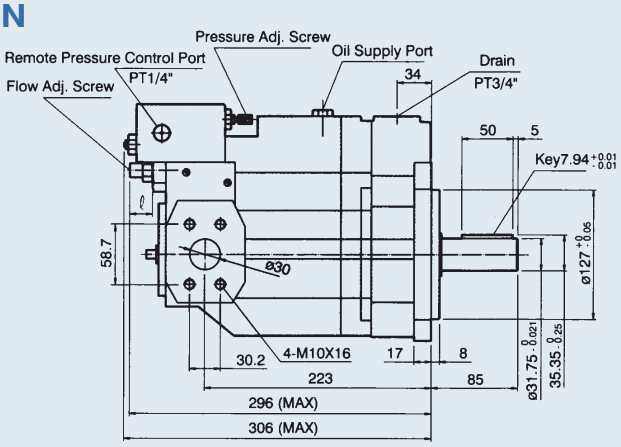

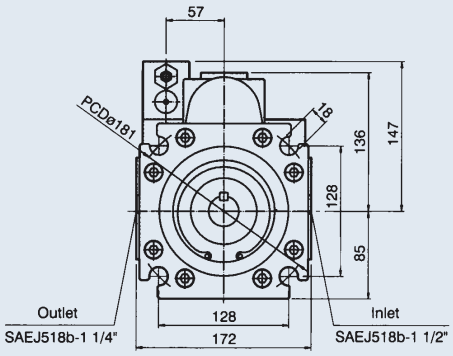

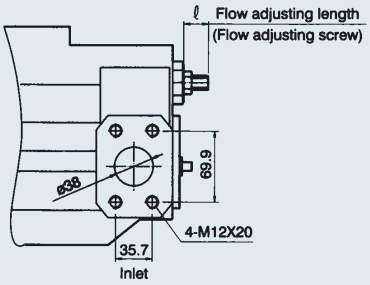

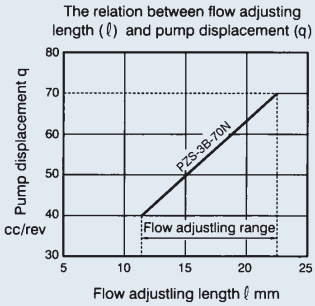

PZS-4B-100N

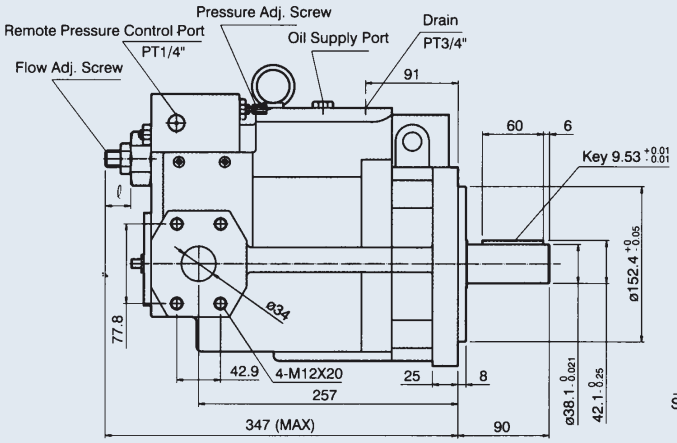

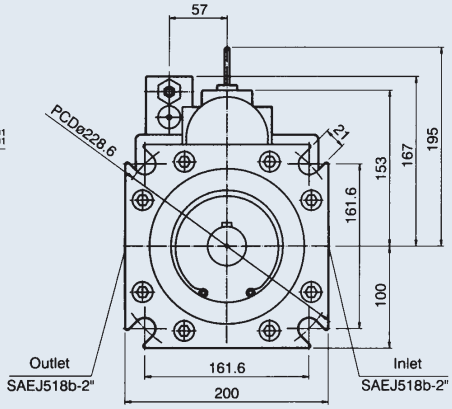

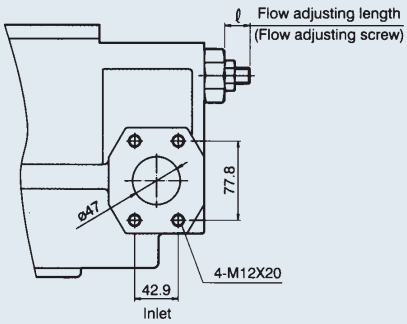

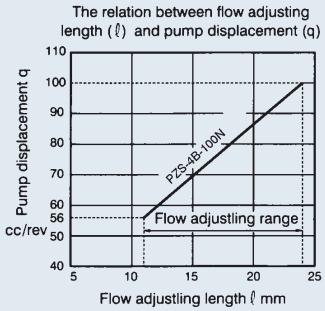

PVS, PZS SERIES VARIABLE VOLUME PISTON PUMP

Cross section drawing

PVS-0B-08

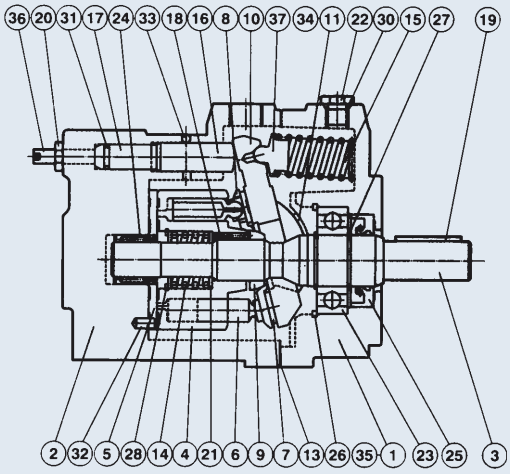

PVS-1B-16/22
PVS-2B-35/45

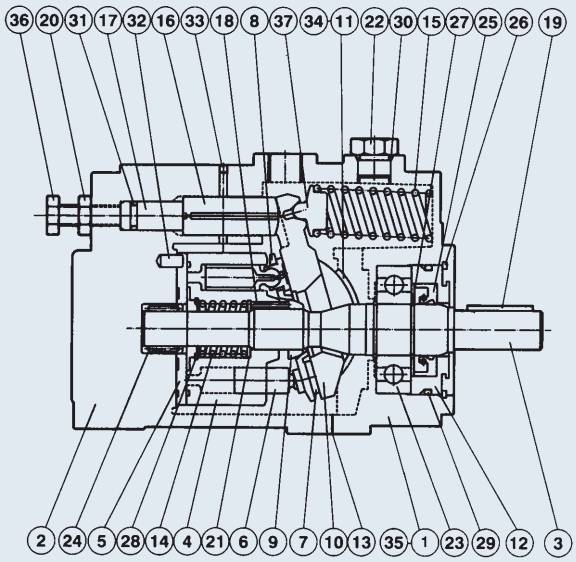

PVS-3B-70
PVS-4B-100

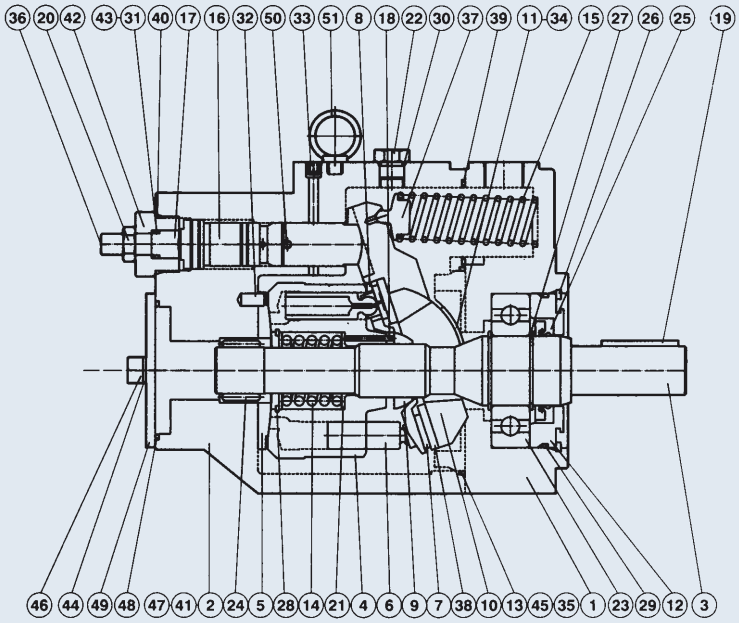

Parts list

NO.	Part Name	NO.	Part Name	NO.	Part Name	NO.	Part Name	NO.	Part Name
1	Bady	9	Barrel holder	17	Guide	25	Oil seal	33	Expander plug
2	Case	10	Swash plate	18	Needle	26	Snap ring	34	Machine screw
3	Shaft	11	Thrust bush	19	Key	27	Snap ring	35	Machine screw
4	Cylinder barrel	12	Seal holder	20	Nut	28	Snap ring	36	Flow adj. screw
5	Valve plate	13	Gasket	21	Retainer	29	O-ring	37	Spring Holder
6	Piston	14	Spring	22	Plug	30	O-ring		
7	Shoe	15	Spring	23	Ball bearing	31	O-ring		
8	Shoe holder	16	Control Piston	24	Needle bearing	32	Pin		

4ManPro
Elements For Manufacturing Processes

HI HYDROME

BOMBAS HIDRÁULICAS DE ENGRANES (GEAR PUMP)

GEAR PUMP

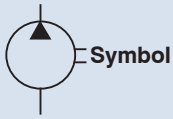

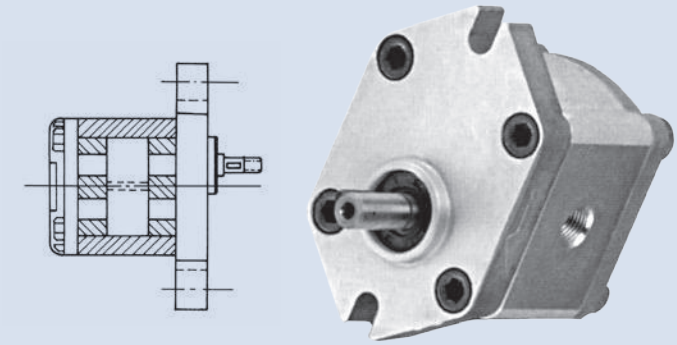

How to order

HGP - 05A - F - ※ - R - X
1 2 3 4 5 6

1	Model
2	Series number
3	Mouning type F: Flange mounting L: Foot mounting
4	Displacement cc/rev
5	Rotation R: Clockwise L: Counter-clockwise
6	Shaft type X: Straight shaft

Specifications

Model	Displacement (cc/rev)	Pressure bar (psi)		Runing Speed (rpm)			Port Size		Weigth (kg)
		Working	Max.	Rate	Max.	Min.	Inlet	Outlet	
HGP-05A-※03※	0.35	210 (3000)	250 (3500)	1800	3500	800	1/8"	1/8"	0.40
HGP-05A-※05※	0.56								0.42
HGP-05A-※08※	0.85						1/4"	1/4"	0.43
HGP-05A-※1.1※	1.13								0.44

Dimensions

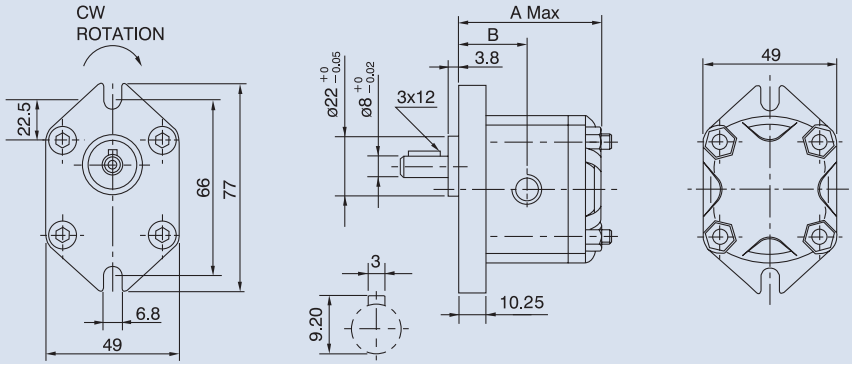

Unit:mm

Model	Dimension A
HGP-05A-*03*	52
HGP-05A-*05*	54
HGP-05A-*08*	56
HGP-05A-*1.1*	58

Model	Dimension B
HGP-05A-*03*	25
HGP-05A-*05*	26
HGP-05A-*08*	27
HGP-05A-*1.1*	28

Performance curves

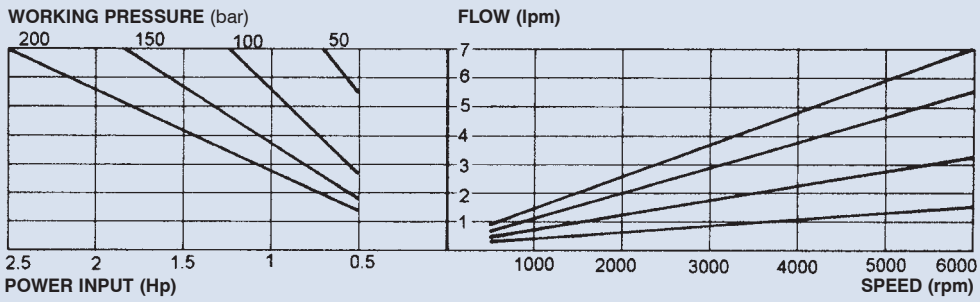

GEAR PUMP

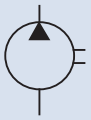

Symbol

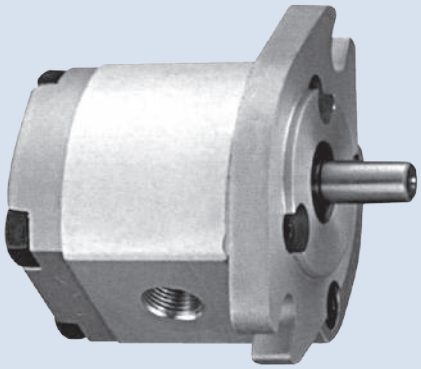

D

How to order

HGP - 1A - F - ※ - R - X - 2B
1 2 3 4 5 6 7

1	Model HGP: Gear pump only PR2: Gear pump with relief (see page 136)
2	Series number
3	Mounting type F: Flange mounting L: Foot mounting
4	Displacement cc/rev
5	Rotation R: Clockwise L: Counter-clockwise
6	Shaft type X: Straight shaft Y: Splined shaft
7	Mounting flange 2B: SAE 2-Bolt 4BD: Din 4-Bolt 4BE: European 4-Bolt

Specifications

Model	Displacement (cc/rev)	Pressure bar (psi)		Runing Speed (rpm)			Weight (kg)
		Working	Max.	Rate	Max.	Min.	
HGP-1A-F1※	1	210 (3000)	250 (3500)	1800	4500	1000	1.0
HGP-1A-F2※	2				4500	600	1.05
HGP-1A-F3※	3				4500	600	1.15
HGP-1A-F4※	4				4000	600	1.18
HGP-1A-F5※	5				3200	600	1.2
HGP-1A-F6※	6				3200	600	1.3
HGP-1A-F8※	7.8				3200	600	1.4

Remark: HGP-1A-F05 (0.5 cc/rev), F08 (0.8 cc/rev) and F2.6 (2.6 cc/rev) are for special order.

Dimensions

HGP-1A-F-※-※-※-2B(SAE 2-Bolt)

Unit:mm

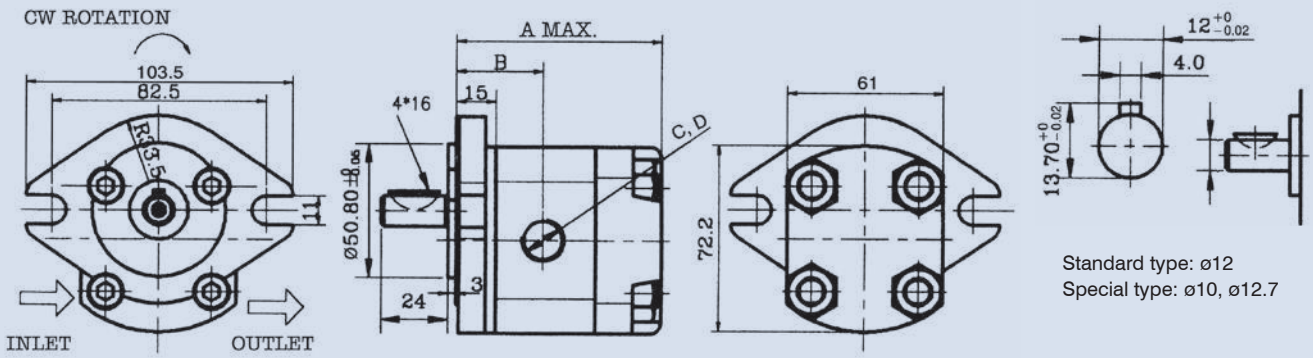

Standard type: ø12
Special type: ø10, ø12.7

GEAR PUMP

Dimensions

HGP-1A-F-※-※-※-4BD (DIN 4-Bolt)

Unit:mm

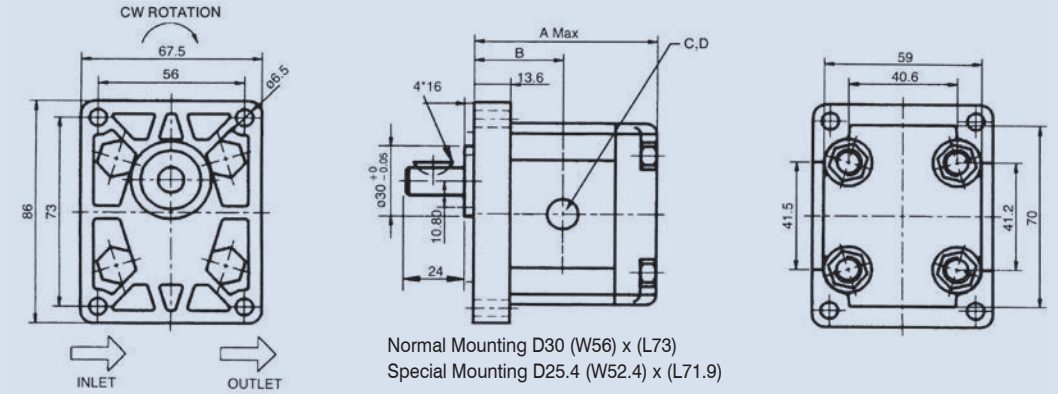

Normal Mounting D30 (W56) x (L73)
Special Mounting D25.4 (W52.4) x (L71.9)

HGP-1A-F-※-※-※-4BE (European 4-Bolt)

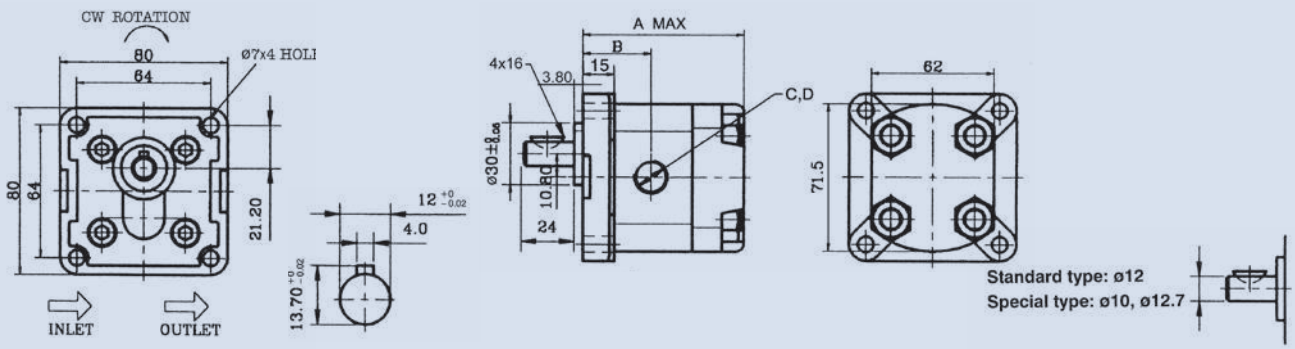

Specifications

Model	Dimension A (mm)		Dimension B (mm)	Port Size C, D	
	4BD	4BE		inlet	outlet
HGP-1A-F08*	67.5	75.5	32.5	3/8" PT	3/8" PT
HGP-1A-F1*	69.5	77.5	33.5	3/8" PT	3/8" PT
HGP-1A-F2*	72	80.1	34.8	3/8" PT	3/8" PT
HGP-1A-F3*	77.5	85.5	37.5	3/8" PT	3/8" PT
HGP-1A-F4*	79.5	87.5	38.5	3/8" PT	3/8" PT
HGP-1A-F5*	82.5	91.5	40.5	3/8" PT	3/8" PT
HGP-1A-F6*	87.5	95.5	42.5	3/8" PT	3/8" PT
HGP-1A-F8*	93.5	101.50	45.5	1/2" PT	3/8" PT

Performance curves

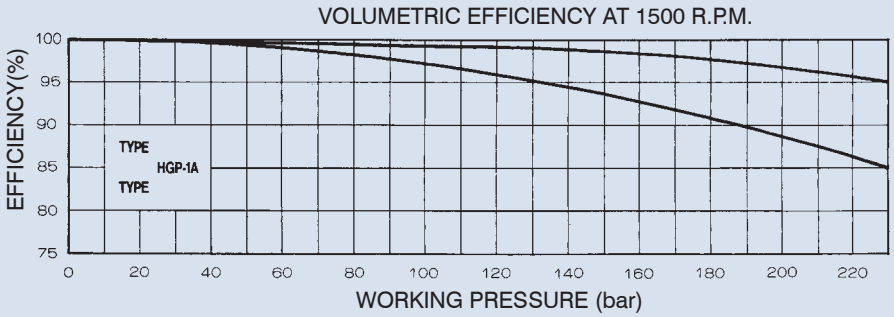

GEAR PUMP

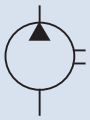

Symbol

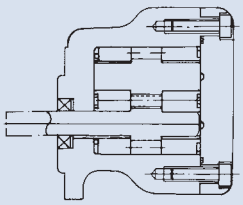

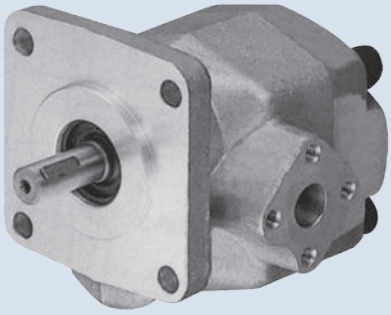

D

How to order

HGP - 2A - F - ※ - R - X - 4BJ
1 2 3 4 5 6 7

1	Model HGP: Gear pump only PR1: Gear pump with relief (see page 135)
2	Series number
3	Mounting type F: Flange type L: Foot type
4	Displacement cc/rev
5	Rotation R: clockwise L: Counter-clockwise
6	Shaft type X: Straight shaft Y: Splined shaft
7	Mounting flange 4BJ: JIS 4-Bolt

Specifications

Model	Displacement (cc/rev)	pressure bar (psi)		Runing Speed (rpm)			Weight (kg)
		Working	Max.	Rate	Max.	Min.	
HGP-2A-※2※	2	210 (3000)	250 (3500)	1800	5000	900	1.69
HGP-2A-※3※	3				5000	850	1.70
HGP-2A-※4※	4				4500	800	1.71
HGP-2A-※6※	6				3500	700	1.72
HGP-2A-※8※	8				3000	600	1.74
HGP-2A-※9※	9				2500	550	1.74
HGP-2A-※11※	11				2000	500	1.74
HGP-2A-※12※	12	175 (2500)	210 (3000)		2000	550	1.76

REMARK: HGP-2A-F2.5 (2.5 cc/rev) and F5 (5 cc/rev) are for special order.

FEATURES:

1. High-Tech aluminum alloy bushings and dry bearings are used to ensure wearing resistance and withstand extra high speed up to 5000 R.P.M.
2. The woodruff key used in this pump withstands much higher torque.
3. A special internal circuit design guarantees that the seal will not be pooped out in case of instant reverse.
4. Dual balanced plating with the bushings is designed such that pump is totally sealed for higher volume efficiency as well as durability.
5. Useful in various applications such as construction machines, Hydraulic elevator and other special purpose machinery.
6. Relief valve can be added on pump case and in connection with lifting valve for use in Hydraulic elevator.

GEAR PUMP

D

Dimensions

HGP-2A

Unit:mm

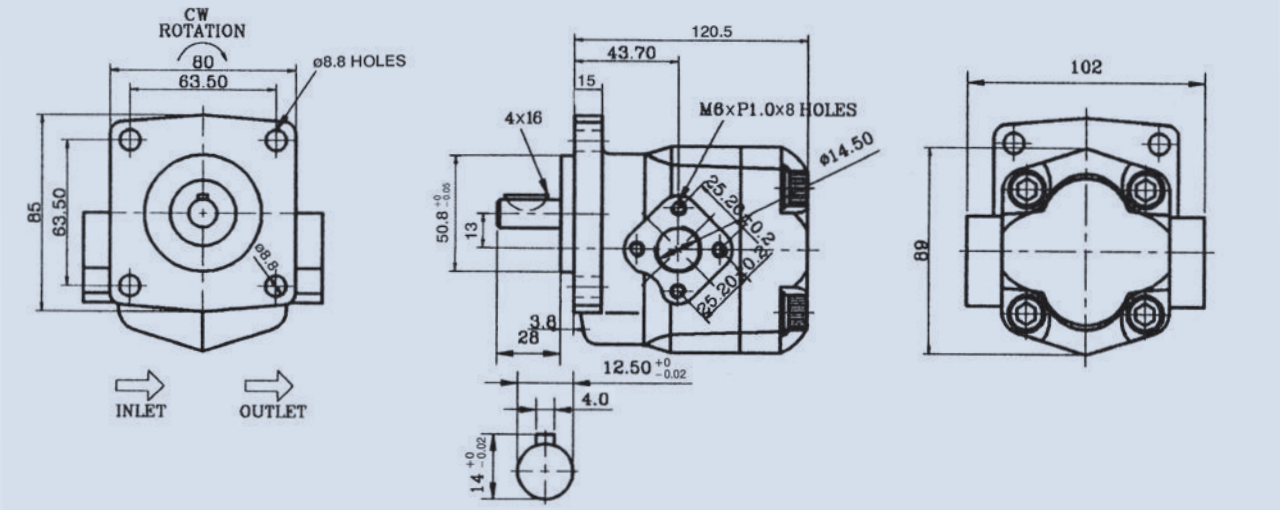

Performance curves

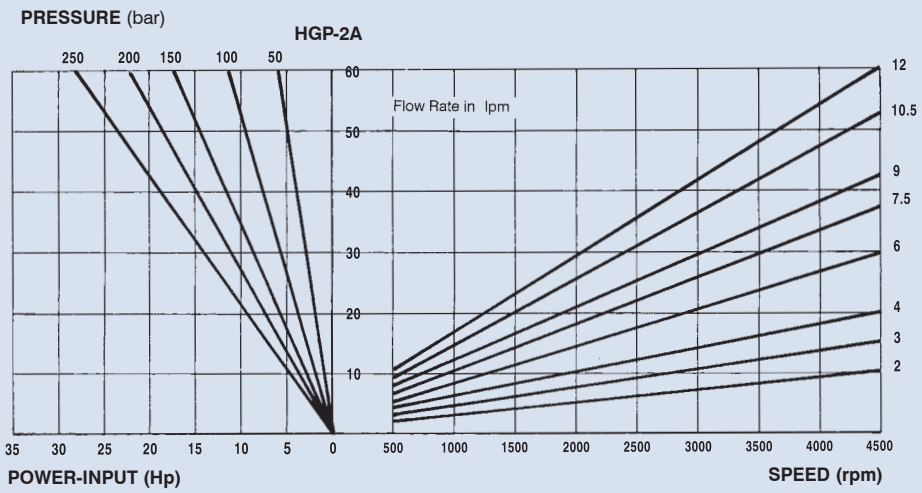

GEAR PUMP

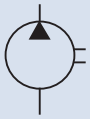

Symbol

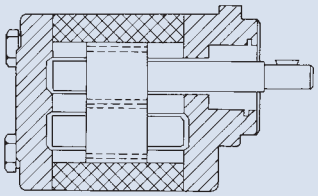

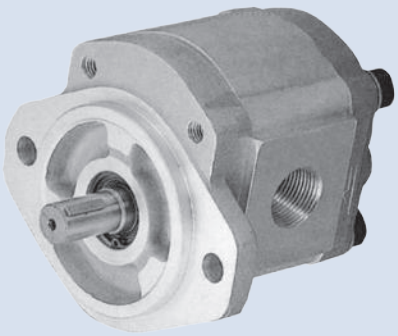

D

How to order

HGP - 3A - F - ※ - R - X - 2B
1 2 3 4 5 6 7

1	Model
2	Series number
3	Mounting type F: Flange type L: Foot type
4	Displacement cc/rev
5	Rotation R: Clockwise L: Counter-clockwise
6	Shaft type X: Straight shaft (Normal: DIA 15.875=2~30 cc/rev, 17.46=33~35 cc/rev) Y: Splined shaft Z: Taper shaft
7	Mounting flange 2B: SAE 2-Bolt 4BD: DIN 4-Bolt

Specifications

Model	Displacement (cc/rev)	Pressure bar (psi)		Runing Speed (rpm)			A	B	Port Size C,D		Weight (kg)
		Working	Max.	Rate	Max.	Min.			Inlet	Outlet	
HGP-3A-※2※	2	210 (3000)	250 (3500)	1800	3000	700	97.4	46.7	3/4"	1/2"	2.19
HGP-3A-※3※	3						99	47.5			2.23
HGP-3A-※4※	4						101	48.5			2.29
HGP-3A-※6※	6						105	50			2.37
HGP-3A-※8※	8.4						109	51.5			2.45
HGP-3A-※11※	11					600	113	54			2.6
HGP-3A-※13※	13						117	56			2.7
HGP-3A-※14※	14.3					500	119	57			2.76
HGP-3A-※17※	16.5						123	59			2.87
HGP-3A-※19※	19.2						127	61			2.99
HGP-3A-※23※	23						134	65			3.19
HGP-3A-※25※	25	175 (2500)	210 (3000)		2800		137	66	1"	3/4"	3.24
HGP-3A-※28※	28						141	68			3.35
HGP-3A-※30※	30				2500		145	70			3.45
HGP-3A-※33※	33	150 (2200)	180 (2600)	1200			150	73			3.6
HGP-3A-※35※	35	130 (1900)	150 (2200)	1200			154	75			3.71

FEATURES:

1. Dual balanced plating and dry bearings used in this pump feature excellent resistance to wearing, thrust, impact, as well as extra high speed revolution.
2. Dual balanced plating with the bushings is designed such that pump is totally sealed for higher volume efficiency as well as durability.
3. The woodruff key used in this pump withstands much higher torque.
4. A special internal circuit design guarantees that the seal will not be popped out in case of instant reverse.
5. Withstands instant pressure up to 210 bar (3000 psi) and runs up to 2000000 cycles.
6. Direction may be changed at any time.

GEAR PUMP

Dimensions

HGP-3A-F-※-※-※ - 2B (SAE 2-Bolt)

Unit:mm

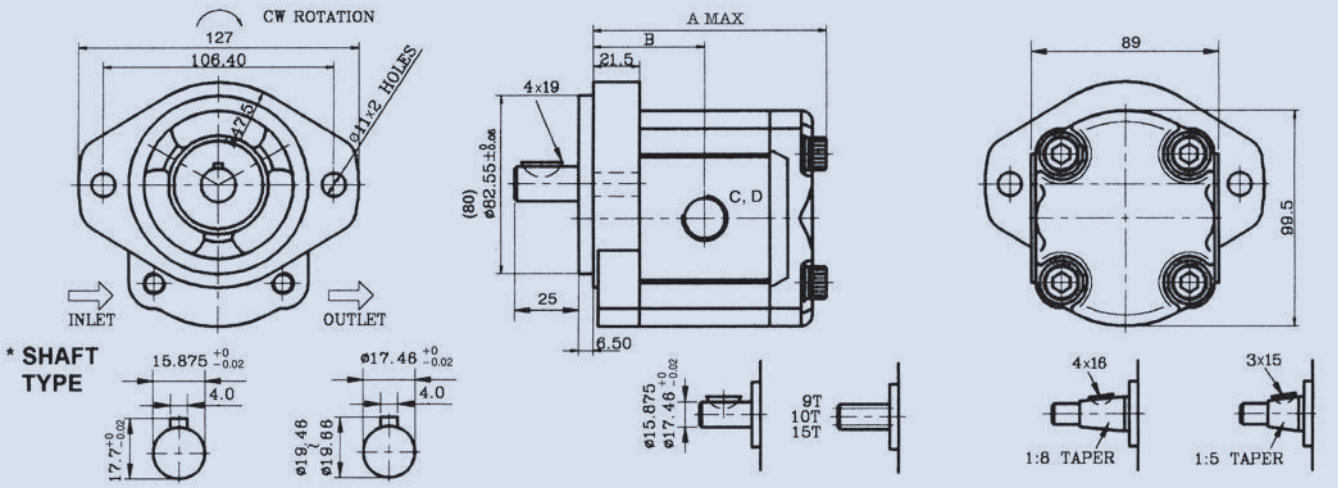

HGP-3A-F-※-※-※- 4BD (DIN 4-Bolt)

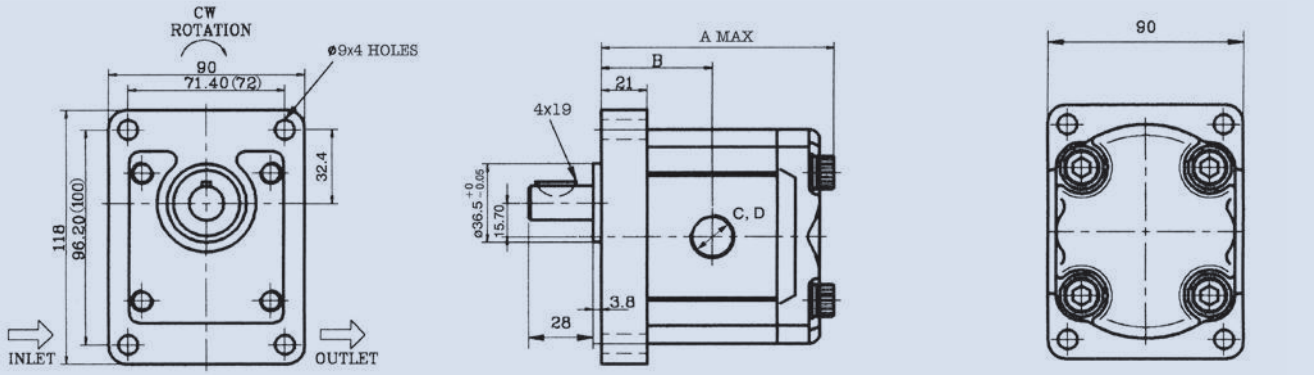

REMARK: The size in ( ) is for special order, see page 131 for the size of A, B and port size C, D.

Performance curves

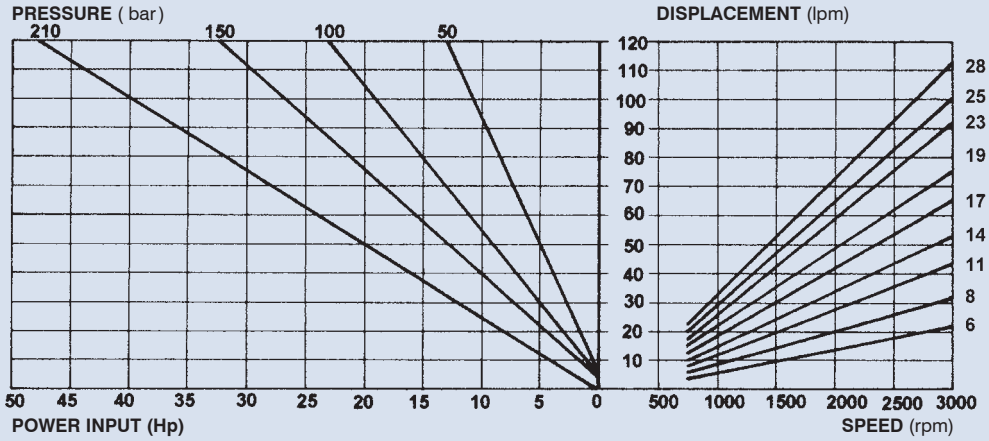

DOUBLE GEAR PUMP

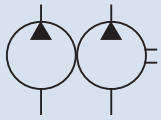

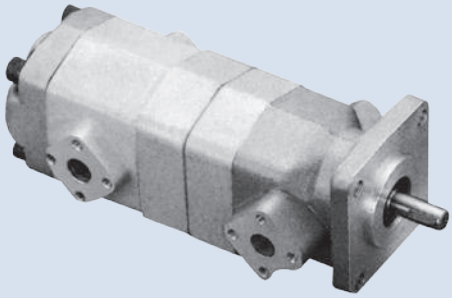

D

How to order

HGP - 22A - F - 32 - R - X - 4BJ
1 2 3 4 5 6 7

1	Model
2	Series number
3	Mounting type F: Flange type L: Foot type
4	Displacement cc/rev 32: P1=3 cc/rev P2=2 cc/rev
5	Rotation R: Clockwise L: Counter-clockwise
6	Shaft type X: Straight shaft Y: Splined shaft Z: Taper shaft
7	Mounting flange 4BJ: JIS 4-Bolt

Specifications

(Refer to page 129)
Working pressure: 210 bar (3000 psi)
Displacement: 4 cc/rev - 24 cc/rev
Mounting flange: JIS 4-Bolt

Dimensions

Unit:mm

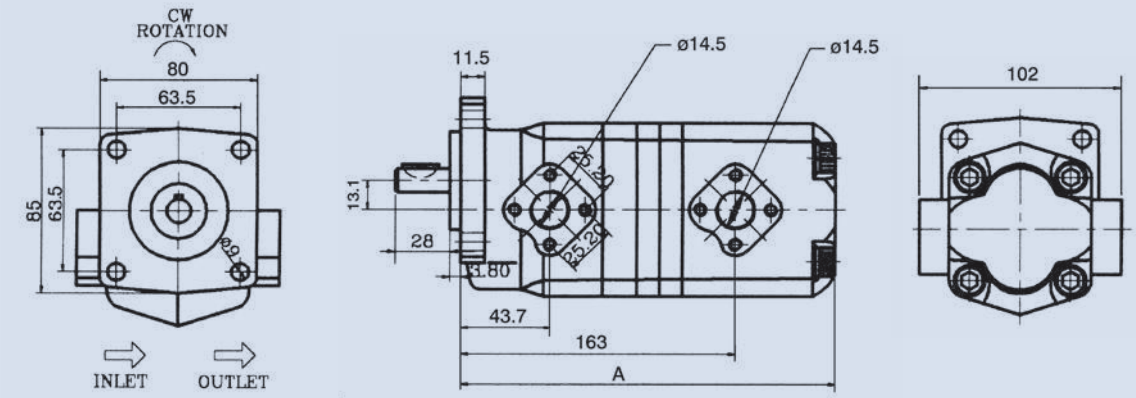

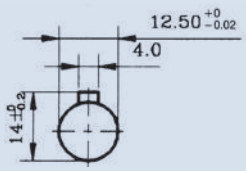

Model	A mm	Model	A mm	Weight (kg)
HGP-22A-*22*	220	HGP-22A-*88*	220	4.5
HGP-22A-*33*	220	HGP-22A-*99*	220	
HGP-22A-*44*	220	HGP-22A-*1111*	220	
HGP-22A-*66*	220	HGP-22A-*1212*	220	

DOUBLE GEAR PUMP

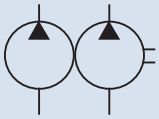

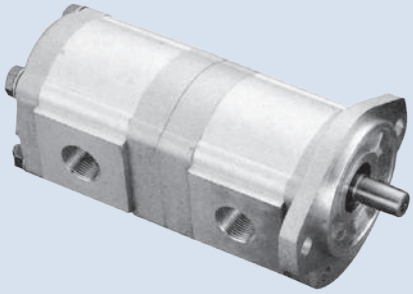

D

How to order

HGP - 33A - F - 32 - R - X - ※
1 2 3 4 5 6 7

1	Model
2	Series number
3	Mounting type F: Flange type L: Foot type
4	Displacement cc/rev 32: P1=3 cc/rev P2=2 cc/rev
5	Rotation R: clockwise L: Counter-clockwise
6	Shaft type X: Straight shaft Y: Splined shaft Z: Taper shaft
7	Mounting flange 2B: SAE 2-Bolt 4BD: DIN 4-Bolt

Specifications

(Refer to page 131)
Working pressure: 210 bar (3000 psi)
Displacement: 4 cc/rev - 70 cc/rev
Mounting flange: SAE 2-Bolt DIN 4-Blot

Dimensions

Unit:mm

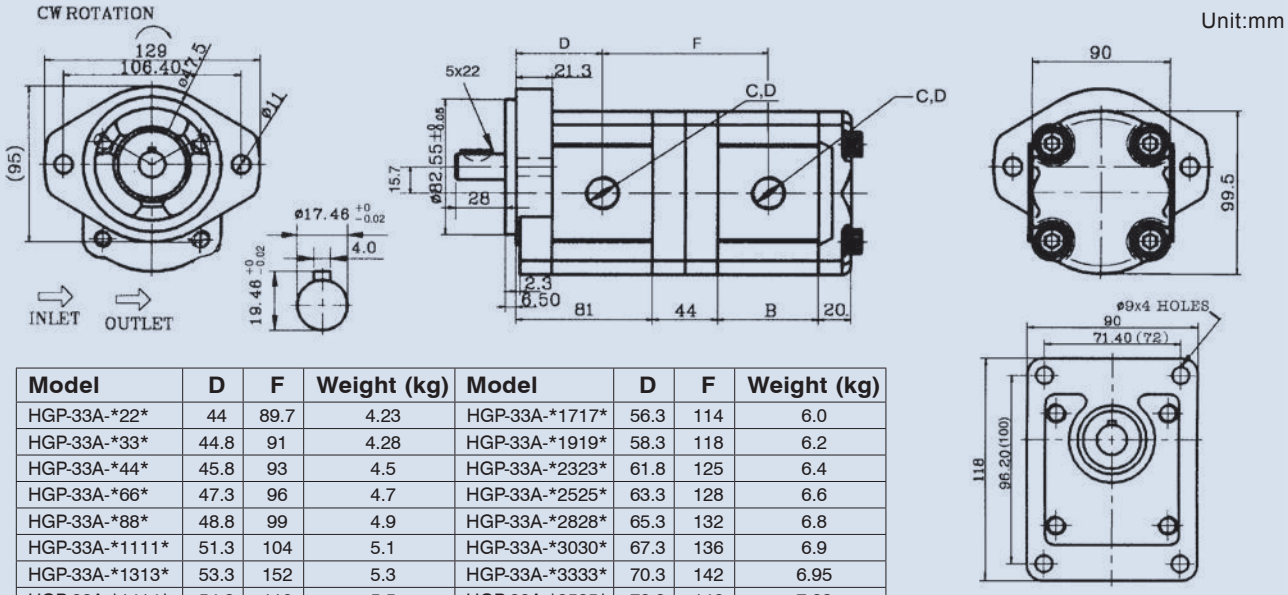

Model	D	F	Weight (kg)	Model	D	F	Weight (kg)
HGP-33A-*22*	44	89.7	4.23	HGP-33A-*1717*	56.3	114	6.0
HGP-33A-*33*	44.8	91	4.28	HGP-33A-*1919*	58.3	118	6.2
HGP-33A-*44*	45.8	93	4.5	HGP-33A-*2323*	61.8	125	6.4
HGP-33A-*66*	47.3	96	4.7	HGP-33A-*2525*	63.3	128	6.6
HGP-33A-*88*	48.8	99	4.9	HGP-33A-*2828*	65.3	132	6.8
HGP-33A-*1111*	51.3	104	5.1	HGP-33A-*3030*	67.3	136	6.9
HGP-33A-*1313*	53.3	152	5.3	HGP-33A-*3333*	70.3	142	6.95
HGP-33A-*1414*	54.3	110	5.5	HGP-33A-*3535*	72.3	146	7.28

Remark: The size in ( ) is for special order, see page 131 for the port size C, D.

GEAR PUMP WITH RELIEF VALVE

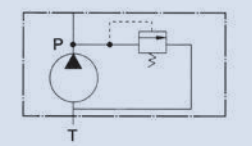

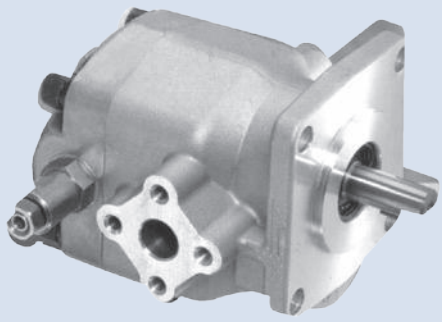

D

How to order

PR1 - F - ※ - R - 4BJ
1 2 3 4 5

1	Model (Reper to page 129, 130)
2	Mounting type F: Flange type L: Foot type
3	Displacement cc/rev
4	Rotation R: Clockwise L: Counter-clockwise
5	Mounting flange 4BJ: JIS 4-Bolt

Specifications

Model	Displacement (cc/rev)	Pressure (bar) (psi)		Runing Speed (rpm)			Weight (kg)
		Working	Max.	Rate	Max.	Min.	
PR1-020	2	210 (3000)	250 (3500)	1800	5000	900	1.69
PR1-030	3				5000	850	1.7
PR1-040	4				4500	800	1.71
PR1-060	6				3500	700	1.72
PR1-075	7.5				3000	600	1.74
PR1-090	9				2500	550	1.74
PR1-105	10.5				2000	500	1.74
PR1-120	12				2000	500	1.76

REMARK: PR1-F2.5 (2.5cc/rev) and F5 (5cc/rev) are for special order.

Dimensions

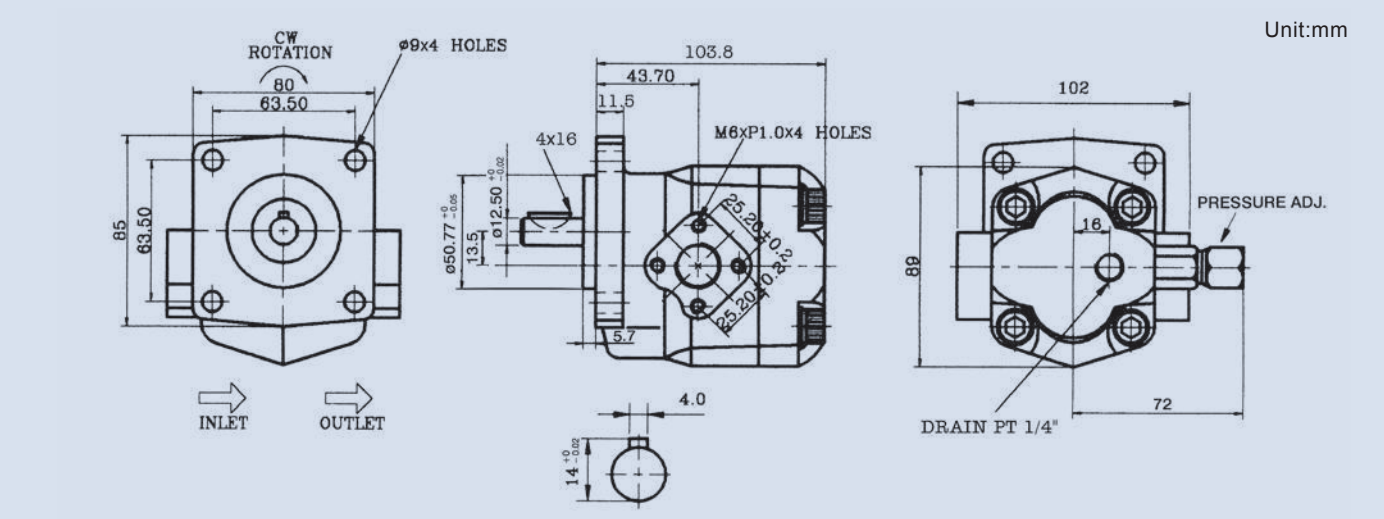

GEAR PUMP WITH RELIEF VALVE

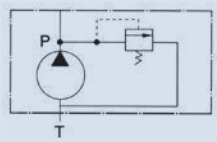

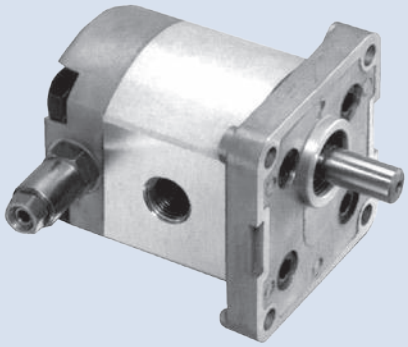

D

How to order

PR2 - F - ※ - R - 4B
1 2 3 4 5

1	Model (Reper to page 127, 128)
2	Mounting type F: Flange type L: Foot type
3	Displacement cc/rev
4	Rotation R: Clockwise L: Counter-clockwise
5	Mounting flange 2B: SAE 2-Bolt 4BD: DIN 4-Bolt 4BE: European 4-Bolt

Specifications

Model	Displacement (cc/rev)	Pressure bar (psi)		Runing Speed (rpm)			Weight (kg)
		Working	Max.	Rate	Max.	Min.	
PR2-010	1	210 (3000)	250 (3500)	1800	4500	1000	1.0
PR2-020	2				4500	600	1.05
PR2-030	3				4500	600	1.15
PR2-040	4				4000	600	1.18
PR2-050	5				3200	600	1.2
PR2-060	6				3200	600	1.3
PR2-080	7.8				3200	600	1.4

PEMARK: PR2-008 (0.8 cc/rev) and PR2-026 (2.6 cc/rev) are for special order.

Dimensions

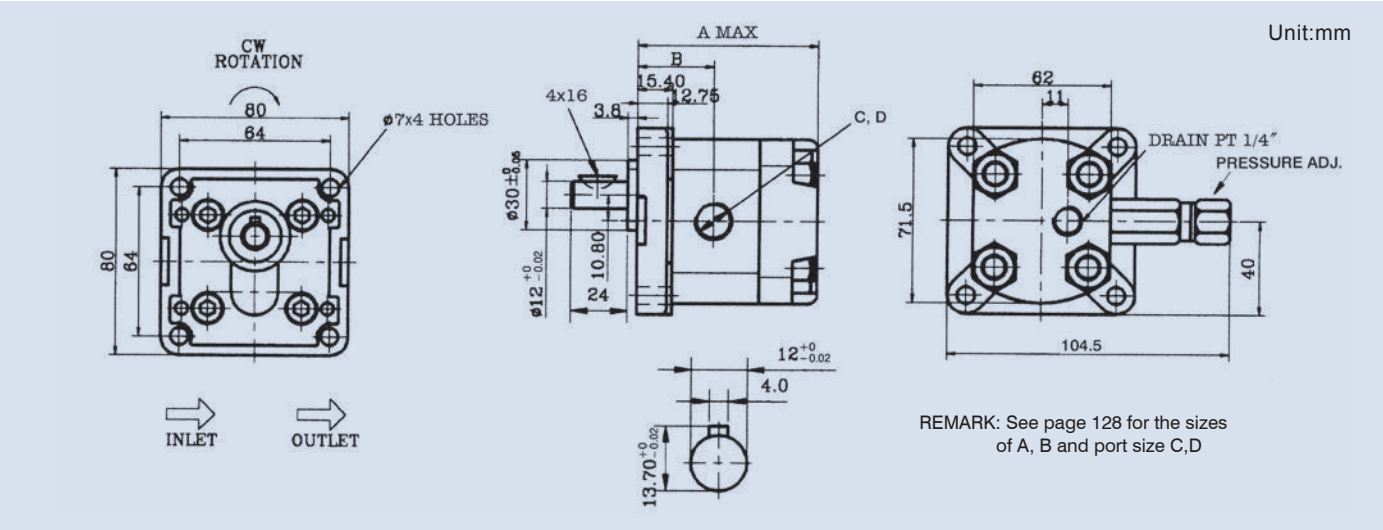

GEAR PUMP WITH RELIEF VALVE + LIFT VALVE

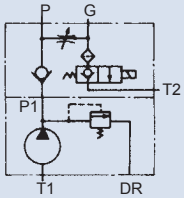

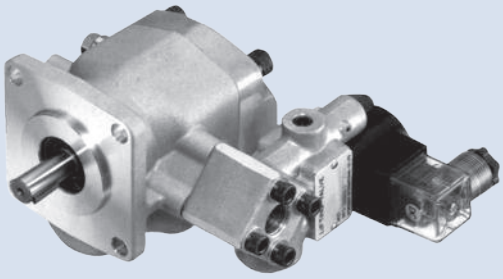

D

How to order

PR1 - F - ※ - R - 4BJ - V2064 - ※

1 2 3 4 5 6 7

1	Model
2	Mounting type F: Flange type L: Foot type
3	Displacement cc/rev
4	Rotation R: Clockwise L: Counter-clockwise
5	Mounting flange 4BJ: JIS 4-Bolt
6	V2064: Lift valve
7	Coil voltage A11: AC110V (50/60 Hz) A22: AC220V (50/60 Hz) D12: DC12V D24: DC24V

Specifications

(Refer to page 135)
Working pressure: 210 bar (3000 psi)
Displacement: 2 cc/rev - 12 cc/rev
Mounting flange: JIS 4-Bolt

Dimensions

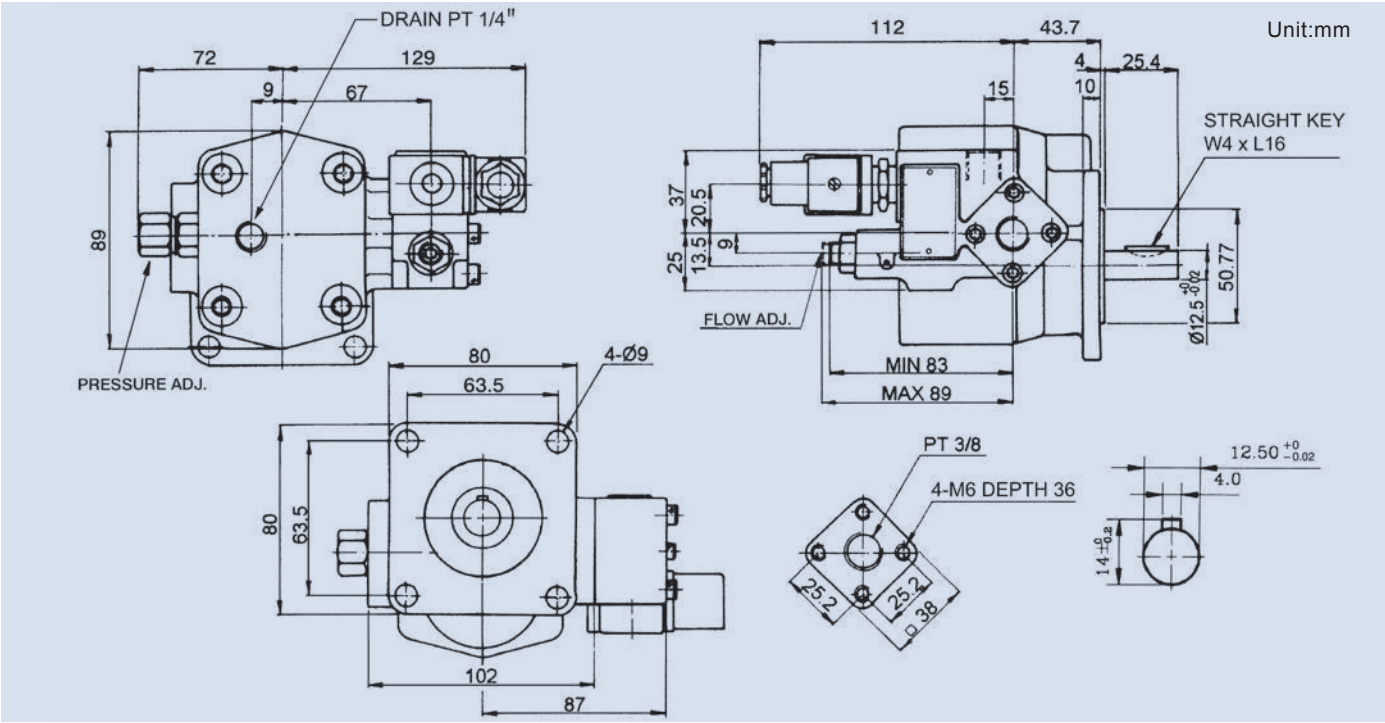

GEAR PUMP WITH RELIEF VALVE + LIFT VALVE

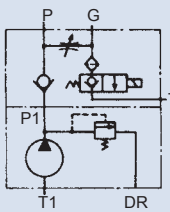

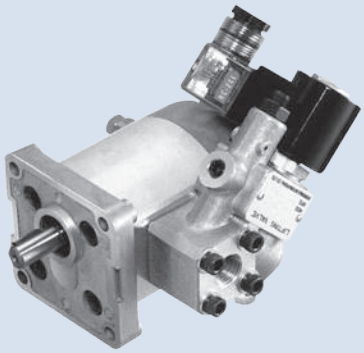

D

How to order

PR2 - F - ※ - R - 4B - 2064 - ※

1 2 3 4 5 6 7

1	Model
2	Mounting type F: Flange type L: Foot type
3	Displacement cc/rev
4	Rotation R: Clockwise L: Counter-clockwise
5	Mounting flange 2B: SAE 2-Bolt 4BD: DIN 4-Bolt 4BE: European 4-Bolt
6	V2064: Lift valve
7	Coil voltage A11: AC110V(50/60 Hz) A22: AC220V(50/60 Hz) D12: DC12V D24: DC24V

Specifications

(Refer to page 136)
Working pressure: 210 bar (3000 psi)
Displacement: 1 cc/rev ~ 7.8 cc/rev

Dimensions

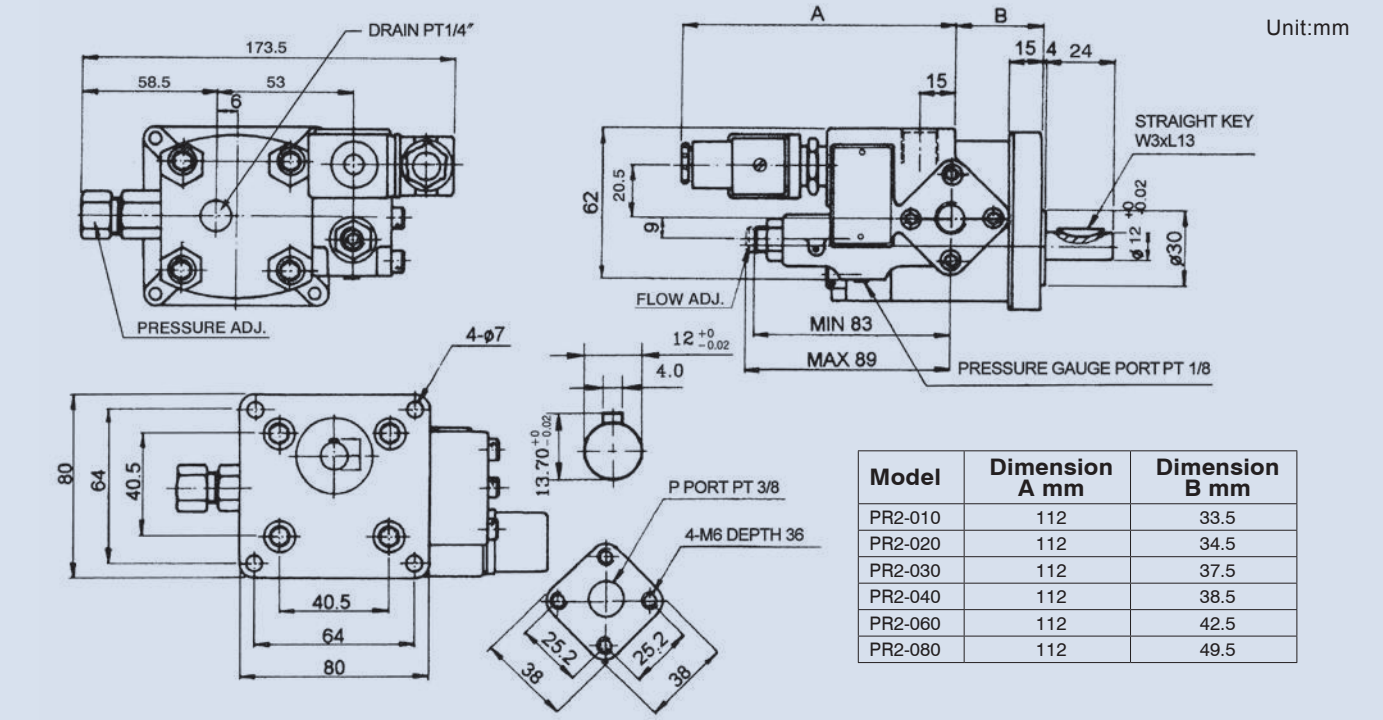

Model	Dimension A mm	Dimension B mm
PR2-010	112	33.5
PR2-020	112	34.5
PR2-030	112	37.5
PR2-040	112	38.5
PR2-060	112	42.5
PR2-080	112	49.5

4ManPro
Elements For Manufacturing Processes

HI HYDROME

BOMBAS HIDRAULICAS DE PALETAS DE DESPLAZAMIENTO FIJO (FIX DISPLACEMENT VANE PUMP)

FIXED DISPLACEMENT VANE PUMP

FEATURES:

1. Designed with high capacity in all aspects.
2. Special design comsideration has been given to the flow passage to prevent anti-cavitation. Extreme smooth and quiet in operation, particularly suitable for in-plant application.
3. Maximum working pressure 1000 psi (70 bar), ideal to use as low pressure pump in Hi-Lo system because of price and performance.
4. Viewing form the shaft end, the direction of rotation is clokwise. (R)

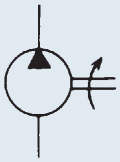

Symbol

50T, 150T

C

How to order

50T, 150T - 23 - L - R - L - ※

1 2 3 4 5 6

1	Low pressure single vane pump
2	Displacement cc/rev
3	Mounting type F: Flange type L: Foot type (normal)
4	Shaft rotation (viewed from shaft end) R: Clockwise L: Counter-clockwise
5	Discharge port position (viewed from shaft end) L: Left side (normal) R: Right side
6	Shaft diameter for 50T None: ø22 (standard) 01: ø19.05

Specifications

Model	Displacement cc/rev	Delivery At No-Load Pressure (lpm)				Running Speed (rpm)		Max. Pressure (bar)	Weight (kg)	
		Running Speed (rpm)				Max.	Min.		Flange Type	Foot Type
		1000	1200	1500	1800					
50T	07	–	9.0	11.2	13.5	1800	1200	105	9.5	10.5
	12	12.0	14.4	18.0	21.6	1800	950	105		
	14	14.6	17.5	21.7	26.1	1800	950	105		
	17	17.0	20.3	25.5	31.5	1800	950	105		
	19	19.2	23.0	28.8	34.6	1800	950	105		
	21	21.1	25.3	31.7	38.0	1800	950	105		
	23	23.0	27.6	34.5	41.4	1800	950	105		
	26	26.2	31.4	39.3	47.2	1800	950	105		
	30	30.1	36.1	45.2	54.0	1800	950	105		
	36	36.2	43.4	54.3	–	1500	950	70		
	40	41.5	49.8	–	–	1200	950	70		
150T	48	48.3	57.9	72.4	86.9	1800	900	90	24	25
	61	61.5	73.8	92.2	110.7	1800	900	90		
	75	75.2	90.6	113.2	135.9	1500	900	90		
	94	94.2	113.0	141.3	–	1500	900	70		
	116	116.3	139.6	–	–	1200	900	70		

FIXED DISPLACEMENT VANE PUMP

Dimensions

50T FOOT TYPE

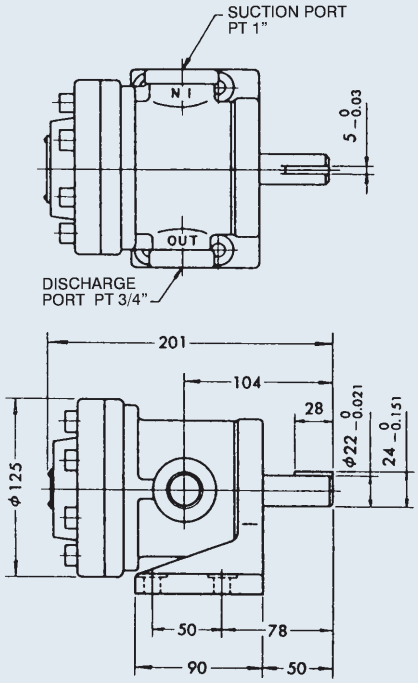

FLANGE TYPE

Unit:mm

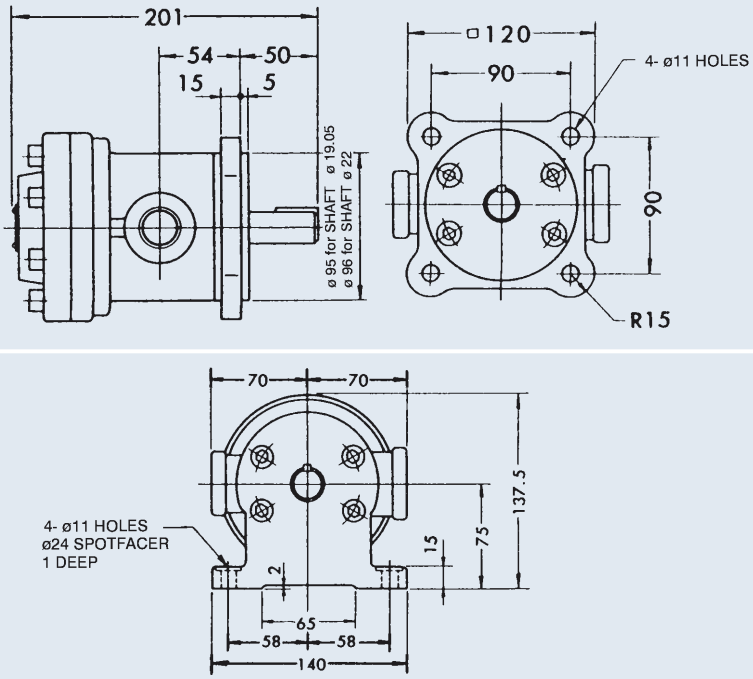

150T FOOT TYPE

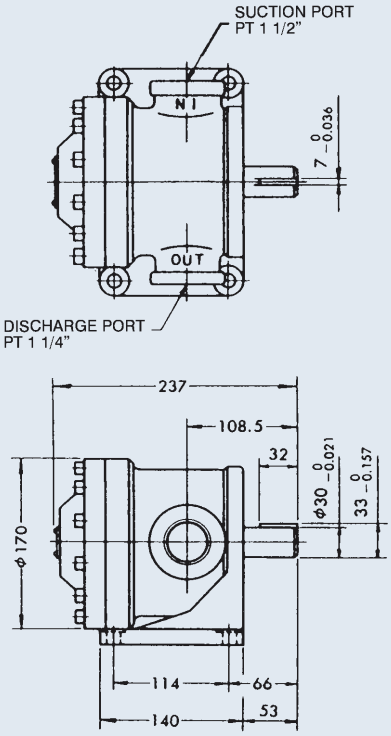

FLANGE TYPE

Unit:mm

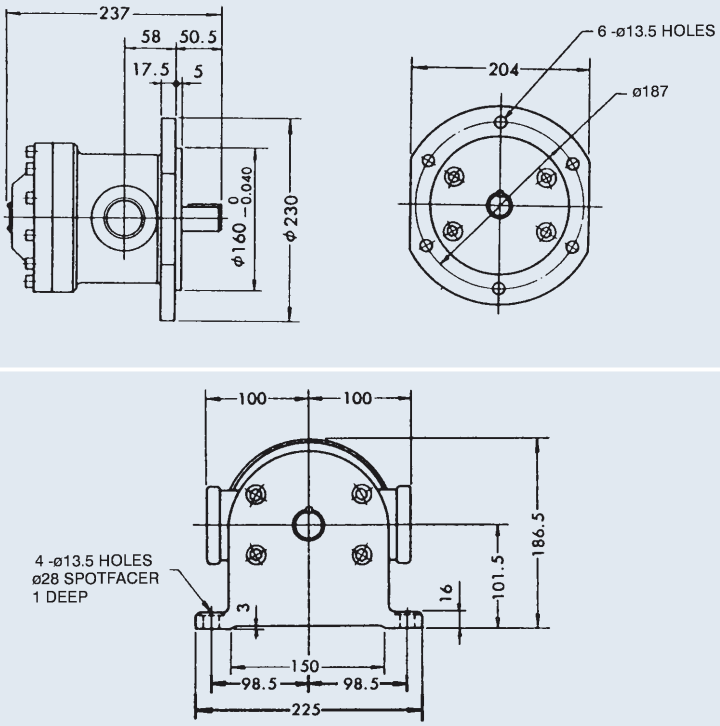

C

FIXED DISPLACEMENT VANE PUMP

50T, 150T Decomposition Chart

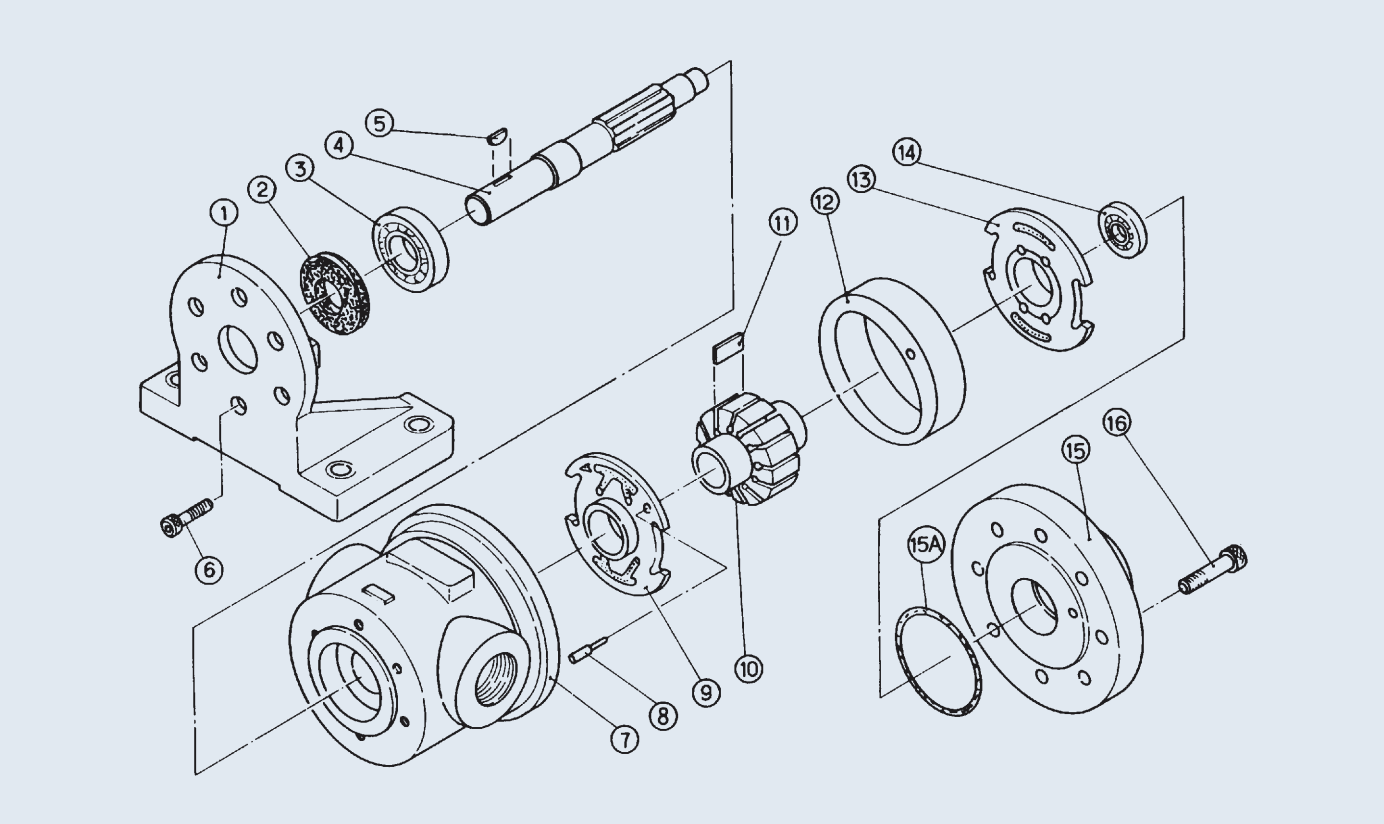

50T parts list

Item No.	Description	Specification	Q'ty
1	Foot (or) Flange		1
2	Seal	22x47x8	1
3	Bearing	6204ZZ	1
4	Shaft		1
5	Woodruff-Key	NO.607	1
6	Socket Head Cap Screws	M10x1.5x20	6
7	Body		1
8	Lock-Pin		1
9	"A" Port Plate		1
10	Rotor		1
11	Vanes		12
12	Cam Ring		1
13	"B" Port Plate		1
14	Bearing	6200	1
15	Cover		1
15A	O-Ring	G75	1
16	Socket Head Cap Screws	M10x1.5x30	8

150T parts list

Item No.	Description	Specification	Q'ty
1	Foot (or) Flange		1
2	Seal	32x52x9	1
3	Bearing	6205ZZ	1
4	Shaft		1
5	Key	7x7x35	1
6	Socket Head Cap Screws	M10x1.5x20	6
7	Body		1
8	Lock-Pin		1
9	"A" Port Plate		1
10	Rotor		1
11	Vanes		12
12	Cam Ring		1
13	"B" Port Plate		1
14	Bearing	6203	1
15	Cover		1
15A	O-Ring	G120	1
16	Socket Head Cap Screws	M10x1.5x40	8

FIXED DISPLACEMENT VANE PUMP

Performance curves

50T-12

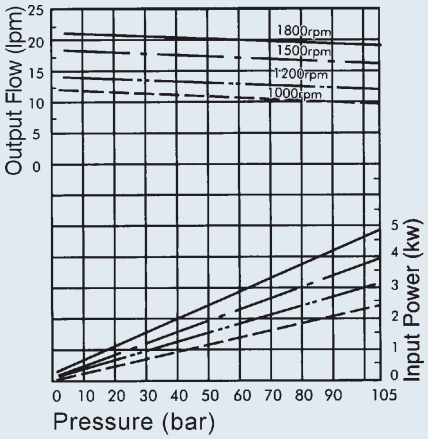

50T-14

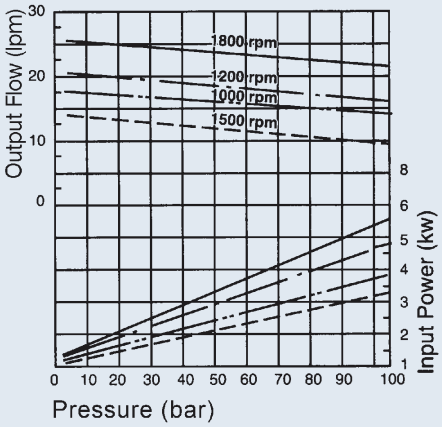

50T-17

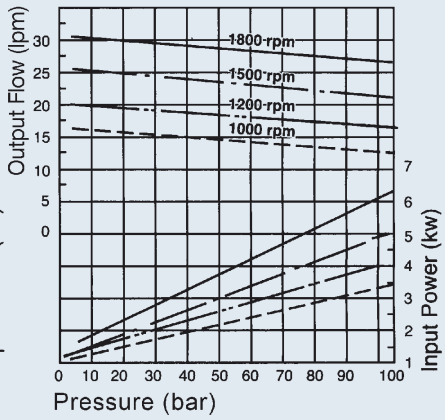

50T-21

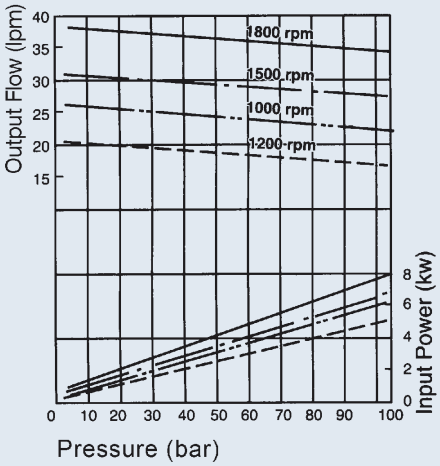

50T-23

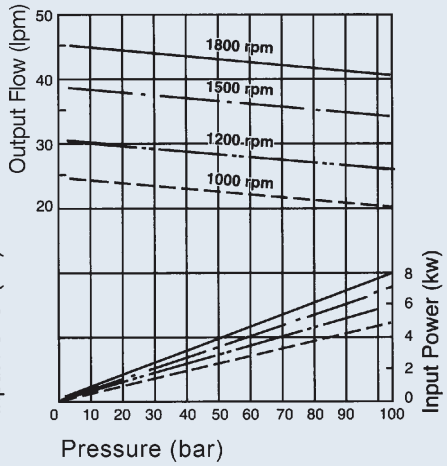

50T-30

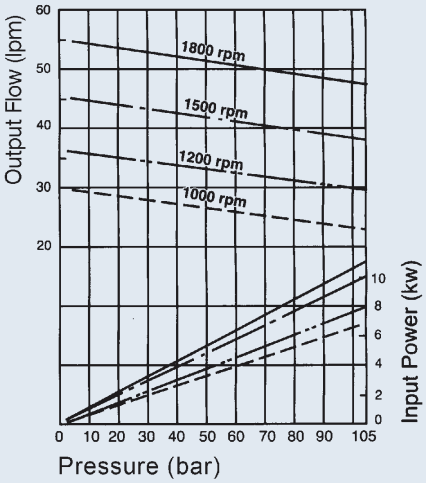

50T-36

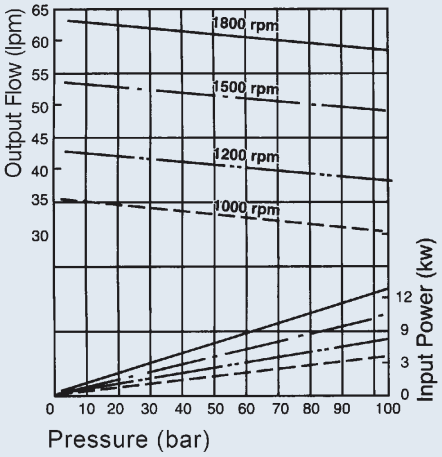

50T-40

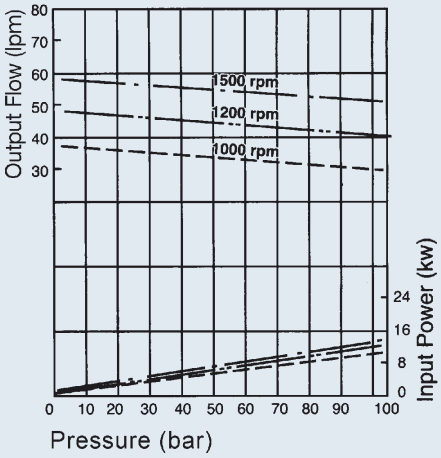

LOW PRESSURE VANE PUMP+ HI-PRESSURE GEAR PUMP

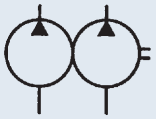

Symbol

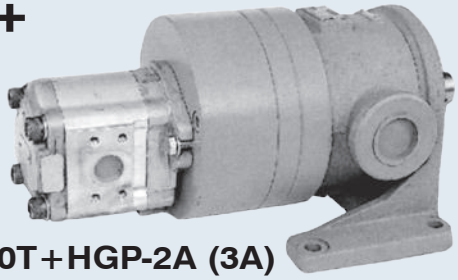

50T+HGP-2A (3A)
150T+HGP-2A (3A)

C

How to order

50T, 150T - 36 - 3 - ※ - R - 01
1 2 3 4 5 6

1	Model
2	Vane pump displacement 36: 36cc/rev (see page. 81)
3	Gear pump displacement 3: 3cc/rev (see page. 129 HGP-2A, page. 131 HGP-3A)
4	Mounting type F: Flange type L: Foot type (normal)
5	Shaft rotation (viewed from shaft end) R: Clockwise L: Counter-clockwise
6	Shaft diameter for 50T None: ø22 (normal) 01: ø19.05

Dimensions

50T+HGP-2A

Unit:mm

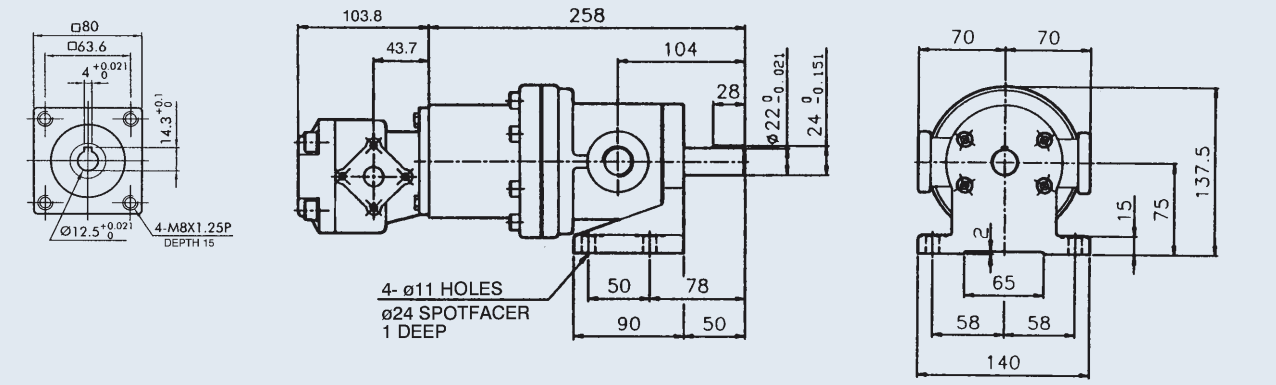

150T+HGP-2A

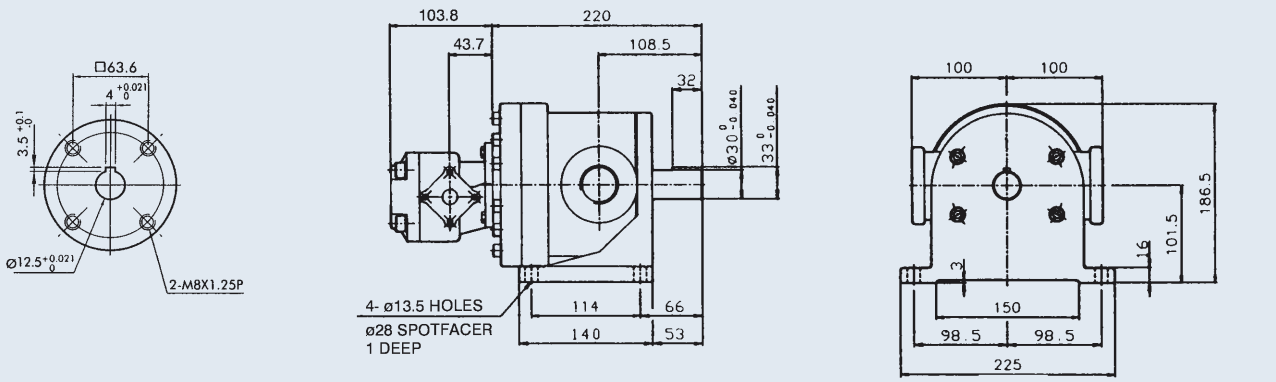

HVP-FAI FIXED DISPLACEMENT VANE PUMP

Symbol

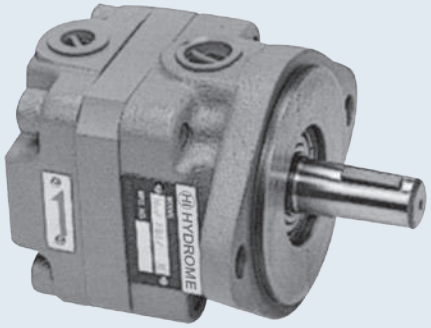

How to order

HVP-FAI - F - 11 - R
1 2 3 4

1	Low pressure single vane pump
2	Mounting type F: Flange type (normal) L: Foot type
3	Displacement
4	Shaft rotation (viewed from shaft end) R: Clockwise L: Counter-clockwise

Specifications

Model	Max. Pressure (bar)	Operating Characteristics At1200 rpm With 20cst Fluid						Running Speed (rpm)		Ports Size (pt)		Weight (kg)	
		Delivery (lpm)			Input (kw)			Min.	Max.	Out	In	Foot Type	Flange Type
		5 bar	35 bar	70 bar	5 bar	35 bar	70 bar						
HVP-FAI-F5R	70	5.1	4.6	3.7	0.1	0.5	1.0	900	1800	3/8	1/2	6.5	5.6
HVP-FAI-F8R	70	9.7	8.9	7.7	0.1	0.8	1.5	900	1800	3/8	1/2	6.5	5.6
HVP-FAI-F11R	70	13.8	12.8	11.7	0.2	1.0	2.1	900	1800	3/8	1/2	6.5	5.6
HVP-FAI-F13R	70	14.9	13.8	12.8	0.2	1.3	2.5	900	1800	3/8	1/2	6.5	5.6

Dimensions

Unit:mm

HVP-FAI-L※R

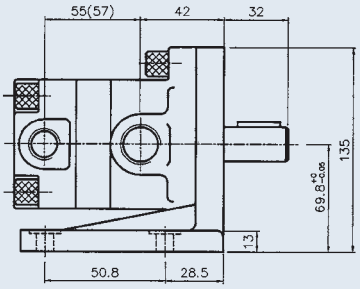

FOOT TYPE

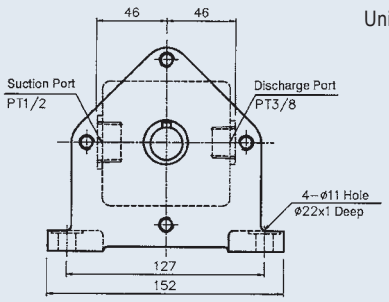

HVP-FAI-F※R

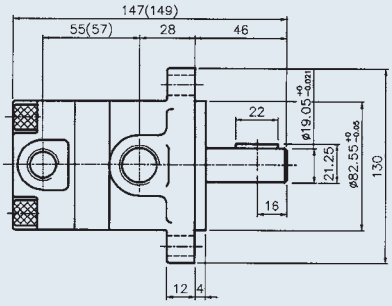

( )FOR HVP-FAI-※13R

FLANGE TYPE

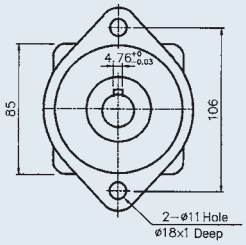

DS FIXED DISPLACEMENT VANE PUMP

Symbol

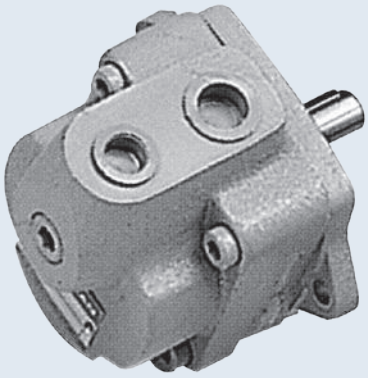

C

How to order

DS - 12 - F - R
1 2 3 4

1	Low pressure single vane pump
2	Displacement
3	Mounting type F: Flange type(normal) L: Foot type
4	Shaft rotation (viewed from shaft end) R: Clockwise L: Counter-clockwise

Specifications

Model	Max. Pressure (bar)	Operating Characteristics At1800 rpm With 20 Fluid						Running Speed (rpm)		Ports Size (pt)		Weight (kg)	
		Delivery (lpm)			Input (kw)			Min.	Max.	Out	In	Foot Type	Flange Type
		0 bar	30 bar	70 bar	0 bar	30 bar	70 bar						
DS-11	70	5.0	4.5	3.9	0.2	0.55	1.1	600	2400	3/8	1/2	4.5	3.0
DS-12	70	7.7	7.2	6.5	0.3	0.75	1.5	600	2400	3/8	1/2	4.5	3.0
DS-13	70	12.6	11.8	11.0	0.4	1.05	2.1	600	2400	3/8	1/2	4.5	3.0
DS-14	70	22.1	21.6	21.0	0.6	1.65	3.4	600	2400	3/8	1/2	4.5	3.0

Dimensions

DS-※-FR

FLANGE TYPE

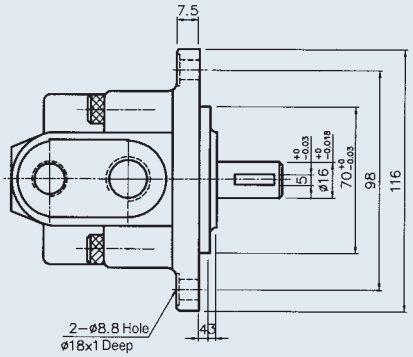

DS-※-LR

Unit:mm

FOOT TYPE

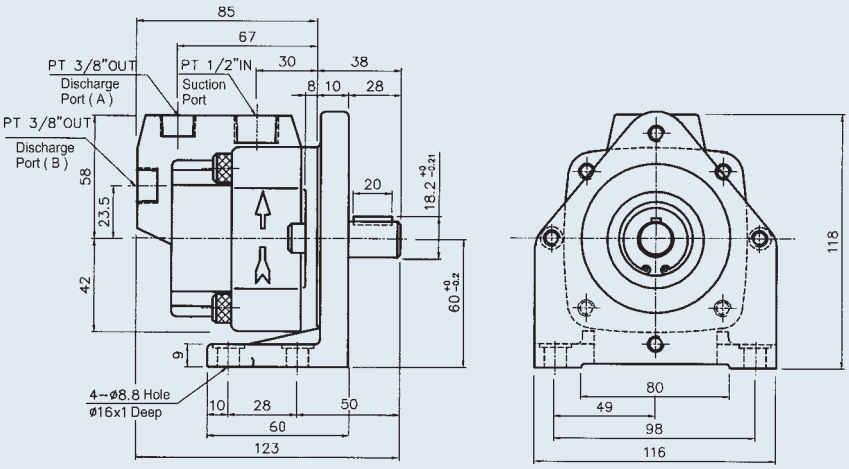

Note: The outlet (B) of the standdrad type is plugged

FIXED DISPLACEMENT HI-PRESSURE SINGLE VANE PUMP

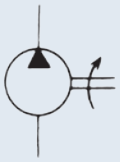

Symbol

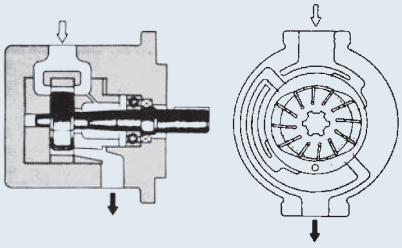

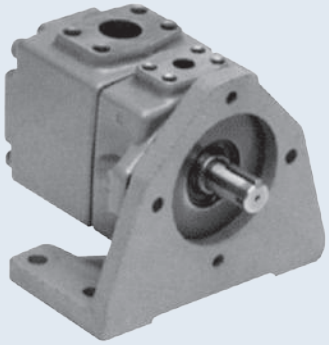

C

How to order

PV2R1 - 25 - F - R - A - A

1 2 3 4 5 6

1	Model PV2R1, PV2R2, PV2R3, PV2R4 (see page 92 VQ-45)
2	Displacement cc/rev
3	Mounting type F: Flange type (normal) L: Foot type
4	Shaft rotation (viewed from shaft end) R: Clockwise L: Counter-clockwise
5	Discharge port A: Upward (normal) B: Downward R: Right side L: Left side
6	Suction port A: Upward (normal) B: Downward R: Right side L: Left side

Specifications

Model	Delivery (cc/rev)	Max. Pressure (bar)	Running Speed (rpm)		Weight (kg)	
			Max.	Min.	Flange Type	Foot Type
PV2R1-06	5.8	210	1800	750	9	11.2
PV2R1-08	8					
PV2R1-10	9.4					
PV2R1-12	12.2					
PV2R1-14	13.7					
PV2R1-17	16.6					
PV2R1-19	18.6					
PV2R1-23	22.7					
PV2R1-25	25.3					
PV2R1-31	31	175				
PV2R2-26	26.2	210		600	19	23.3
PV2R2-33	33					
PV2R2-38	38					
PV2R2-41	41.3					

Model	Delivery (cc/rev)	Max. Pressure (bar)	Running Speed (rpm)		Weight (kg)	
			Max.	Min.	Flange Type	Foot Type
PV2R2-47	47.2	210	1800	600	19	23.3
PV2R2-53	52.3					
PV2R2-59	58.2					
PV2R2-65	64.7					
PV2R3-60	60.3				36.7	46.7
PV2R3-66	66.4					
PV2R3-76	76.4					
PV2R3-82	82.2					
PV2R3-88	88.3					
PV2R3-94	93.6					
PV2R3-108	108.2					
PV2R3-116	115.6	175				
PV2R3-126	125.6					

Dimensions

PV2R1

FLANG TYPE

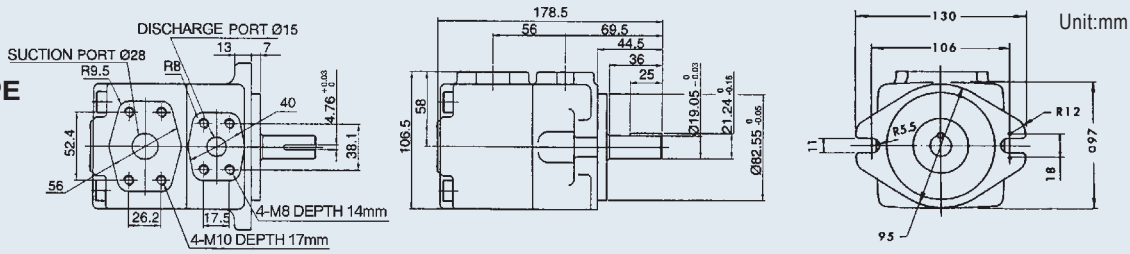

FOOT TYPE

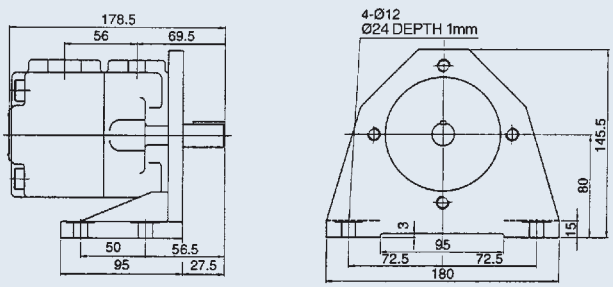

FIXED DISPLACEMENT HI-PRESSURE SINGLE VANE PUMP

Dimensions

PV2R2

Unit:mm

FLANGE TYPE

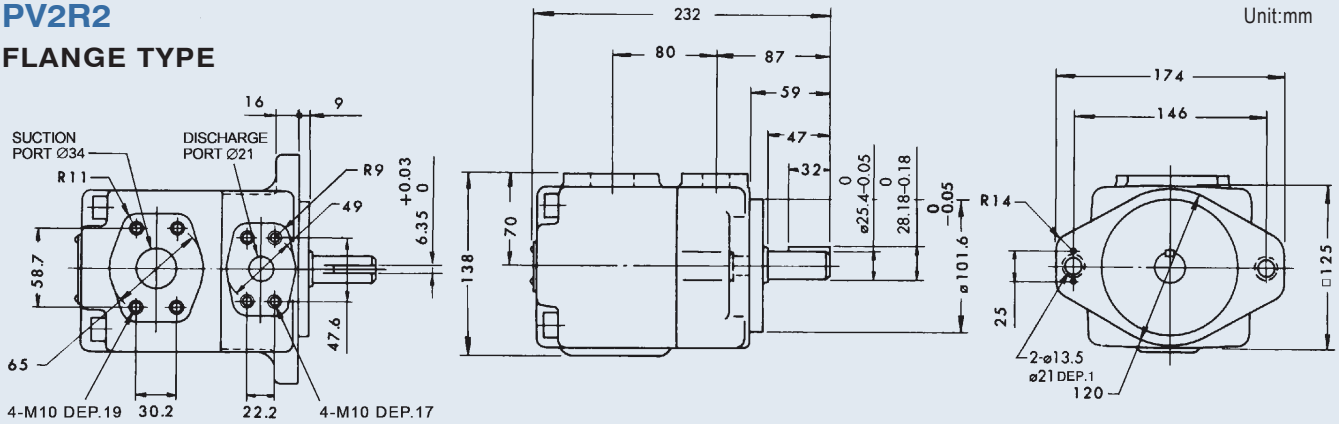

FOOT TYPE

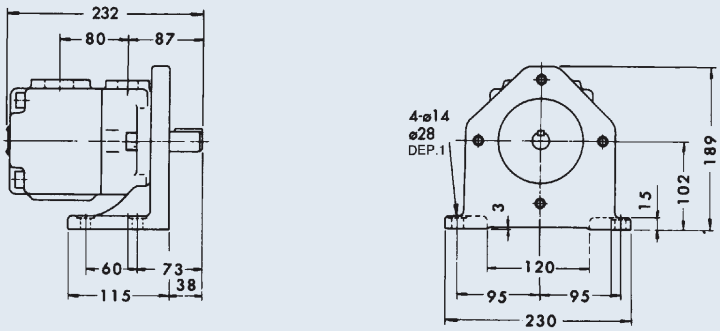

PV2R3

Unit:mm

FLANGE TYPE

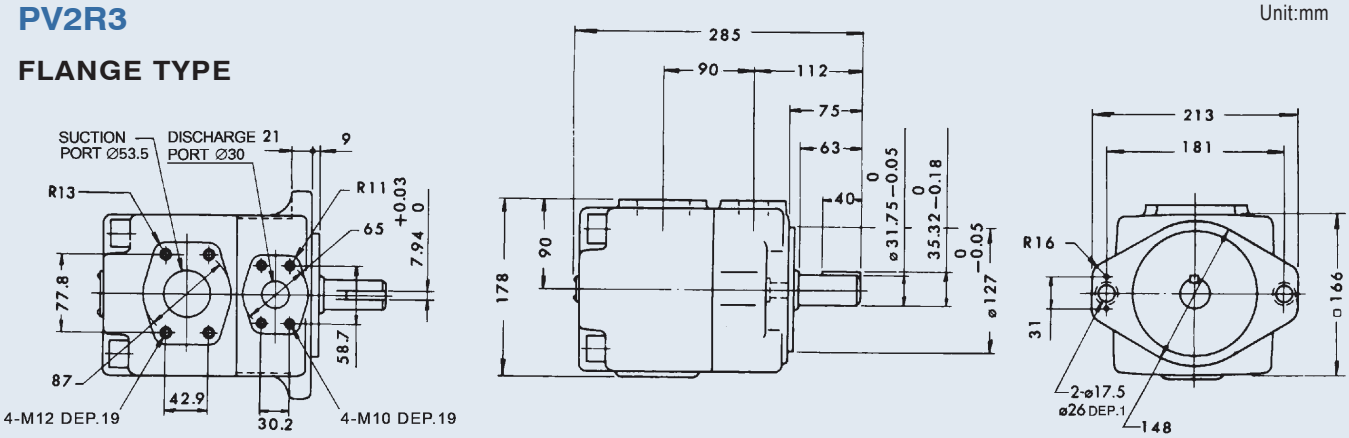

FOOT TYPE

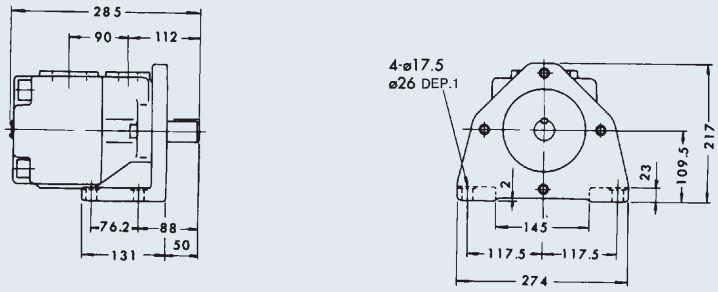

FIXED DISPLACEMENT HI-PRESSURE SINGLE VANE PUMP

Decomposition Chart

PV2R1

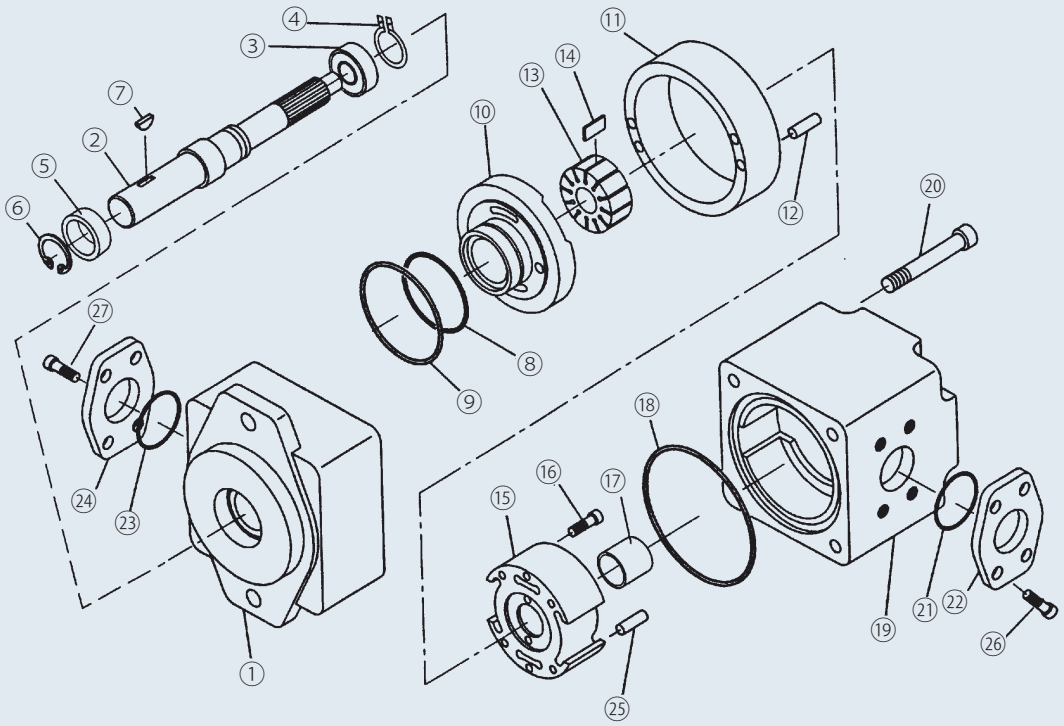

PV2R2
PV2R3

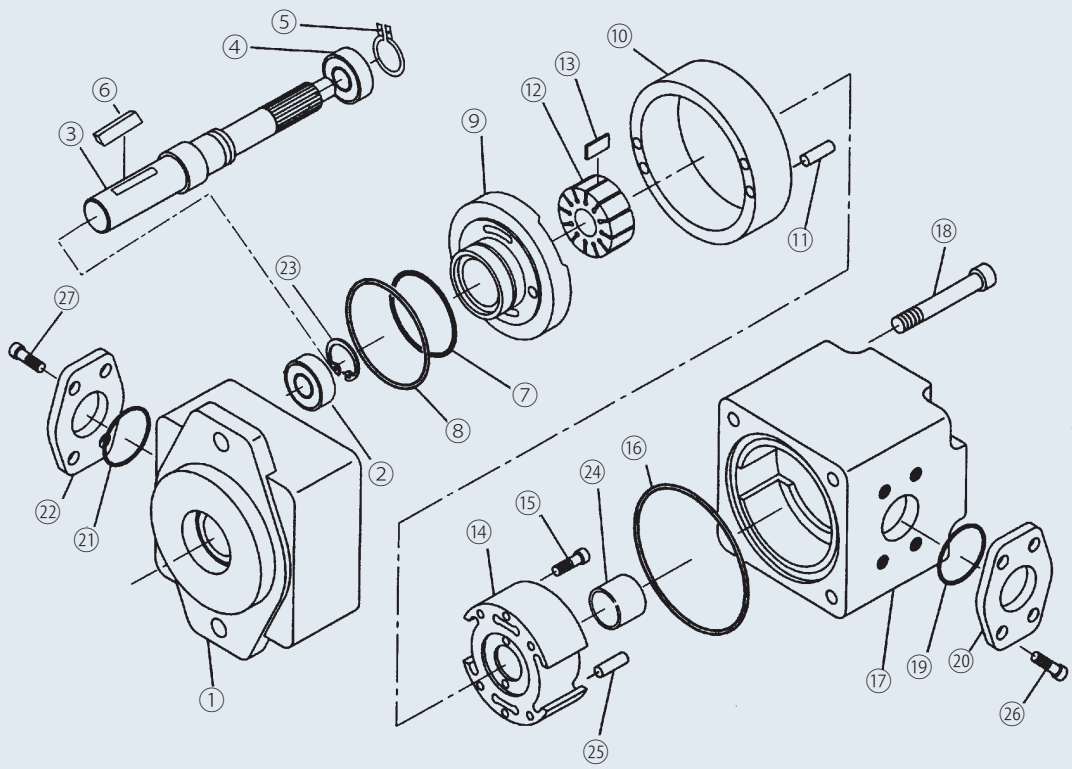

FIXED DISPLACEMENT HI-PRESSURE DOUBLE VANE PUMP

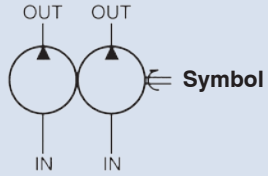

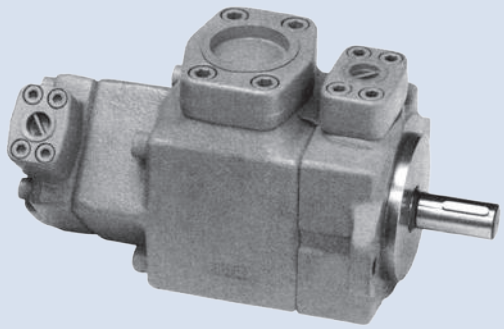

C

How to order

PV2R12, PV2R23 - ※ - ※ - F - R - A - A - A

1 2 3 4 5 6 7 8

1	Model PV2R12 (P1: PV2R2, P2: PV2R1) PV2R13 (P1: PV2R3, P2: PV2R1) PV2R23 (P1: PV2R3, P2: PV2R2)
2	P1: Displacement cc/rev (see page 83)
3	P2: Displacement cc/rev (see page 83)
4	Mounting type F: Flange type (normal) L: Foot type
5	Shaft rotation (viewed from shaft end) R: Clockwise L: Counter-clockwise
6	P1: Discharge port A: Upward (normal) B: Downward R: Right side L: Left side
7	Suction port A: Upward (normal) B: Downward R: Right side L: Left side
8	P2: Discharge port A: Upward (normal) B: Downward R: Right side L: Left side E: Left upward 45°

Dimensions

PV2R12

FLANGE TYPE

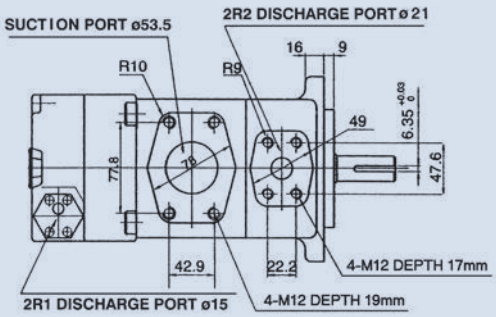

Unit:mm

FOOT TYPE

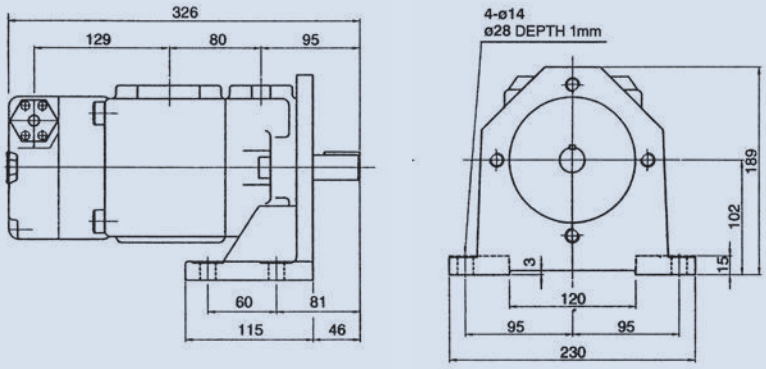

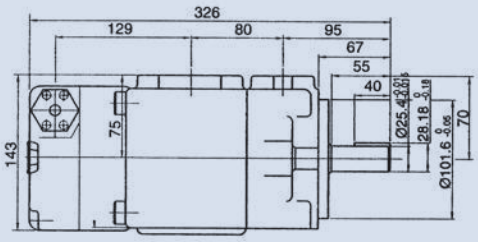

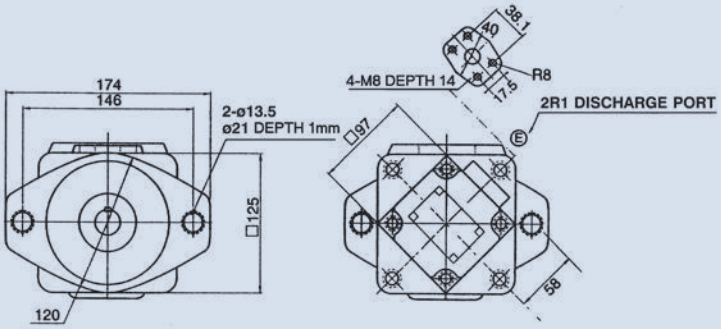

FIXED DISPLACEMENT HI-PRESSURE SINGLE VANE PUMP

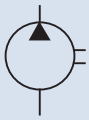

Symbol

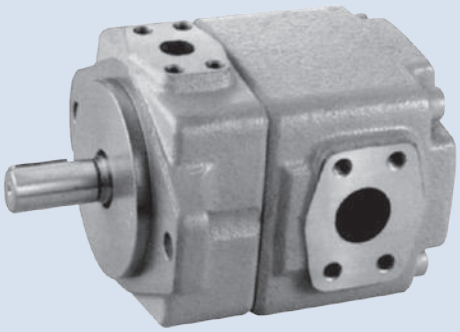

C

How to order

VQ25 - 18 - F - R - A - A - 01

1 2 3 4 5 6 7

1	Model
2	Displacement cc/rev
3	Mounting type F: Flange type (normal) L: Foot type
4	Shaft rotation (viewed from shaft end) R: Clockwise L: Counter-clockwise
5	Discharge port (viewed from shaft end) A: Upward (normal) B: Downward R: Right side L: Left side
6	Suction port (viewed from shaft end) A: Upward (normal) B: Downward R: Right side L: Left side
7	Shaft type 01: Normal

Specifications

Model	Displacement (cc/rev)	Delivery At No-load Pressure (lpm) Running Speed (rpm) 1000	1200	1500	1800	Running Speed (rpm) Max.	Min.	Max . Pressure (bar)	Weight (kg) Flange Type	Foot Type
VQ15	06	6.2	7.4	9.3	11.2	1800	1200	230	10.3	12.7
	08	8.1	9.7	12.1	14.6		800			
	11	11.2	13.4	16.8	20.1					
	14	14.3	17.1	21.5	25.7					
	17	17.1	20.5	25.6	30.7					
VQ20	19	19.2	23	28.8	34.5				12.3	17
	23	23.3	27.9	34.9	41.9					
	26	26.1	31.1	39.1	46.9					
	31	31.1	37.3	46.6	—	1500		200		
	38	38.1	45.6	—	—	1200				
VQ25	18	18.1	21.7	27.2	32.6	1800		230	16.7	21.4
	22	22.1	26.5	33.2	39.8					
	26	26.2	31.4	39.3	47.1					
	32	32.1	38.5	48.1	57.7					
	38	38.2	45.8	57.3	68.7					
	43	43.2	51.8	64.8	77.7					
SVQ25	47	47.1	56.5	70	85				23	31
	52	52.3	62.7	78.4	94.1					
	60	60.2	72.7	90.3	108.3					
	65	65.3	78.3	97.9	117.5					
	75	75	90	112.5	—	1500				
VQ35	60	60.3	72.3	90.4	108.5	1800	600	200	36	44
	66	66.4	79.6	99.6	119.5					
	76	76.3	91.5	114.4	137.3					
	82	82.2	98.6	123.3	147.9					
	88	88.3	105.9	132.4	158.9					
SVQ35	94	94.5	113.4	141.7	170.1				33	41
	108	108.2	129.8	162.3	194.4					
	116	116.1	139.3	174.1	208.9					
	125	124.6	149.5	186.9	—	1500				
VQ45	136	136.8	164	204	246	1800			52	60
SVQ45	156	156.2	188	234	280				66.5	94.5
	189	189.5	227	284	340					
	200	200	240	300	360					
DVQ45	216	216	260	324	—	1500			61	89
	237	237	285	355	—					

FIXED DISPLACEMENT HI-PRESSURE SINGLE VANE PUMP

C

Dimensions

VQ15

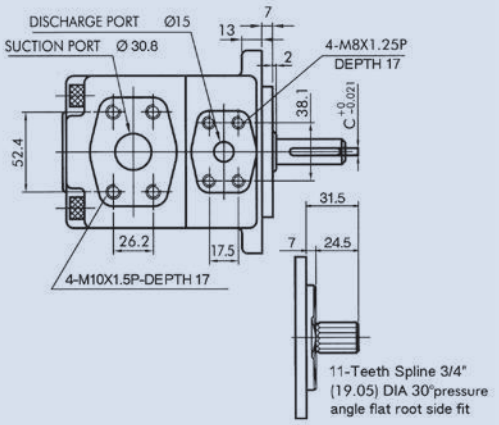

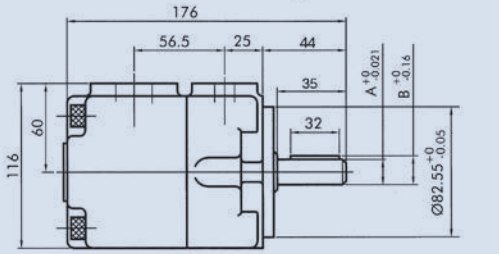

FOOT TYPE

Unit:mm

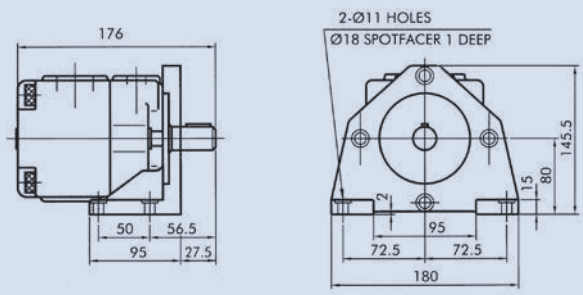

	A	B	C
NO.01-Shaft	ø19.05	21.24	4.76
NO.03-Shaft	Spline shaft		

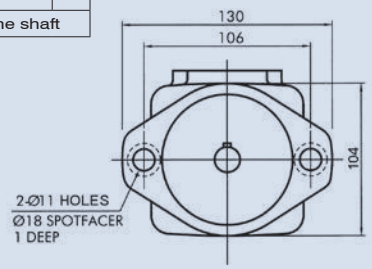

VQ20

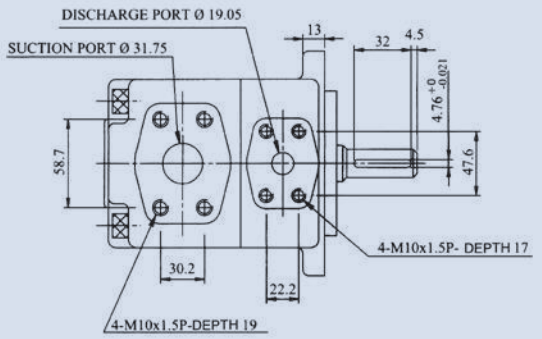

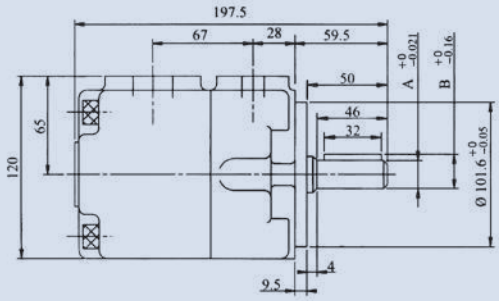

FOOT TYPE

Unit:mm

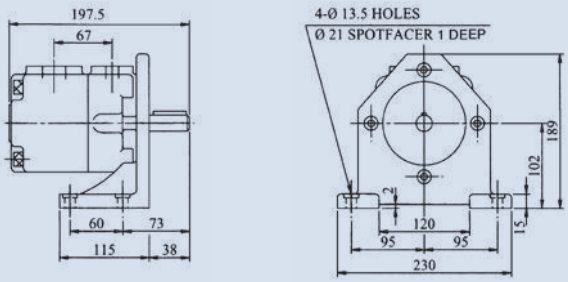

	A	B	C
NO.01-Shaft	ø22.23	24.5	4.76
NO.02-Shaft	ø25.4	28.18	6.35
NO.03-Shaft	ø22.23	24.94	6.35

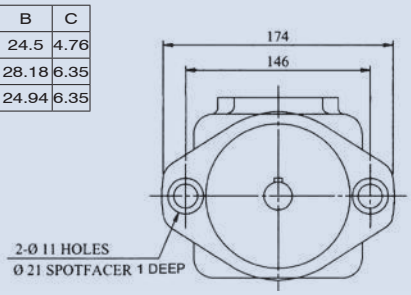

FIXED DISPLACEMENT HI-PRESSURE SINGLE VANE PUMP

Dimensions

VQ25

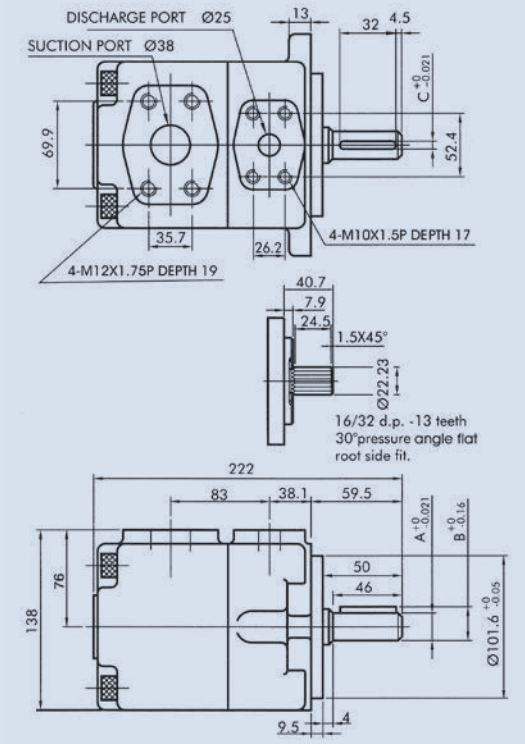

FOOT TYPE

Unit:mm

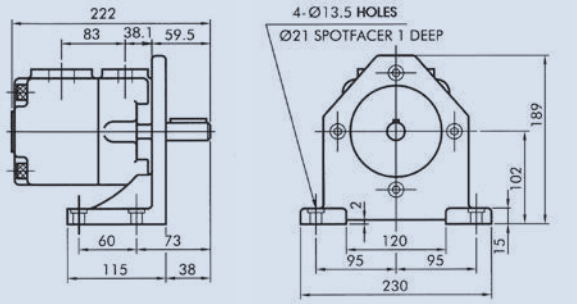

	A	B	C
NO.01-Shaft	ø22.23	24.5	6.35
NO.02-Shaft	ø25.4	28.18	6.35
NO.03-Shaft	ø30	33	7
NO.04-Shaft	Spline shaft		
NO.W-Shaft	ø28	30.8	6.35

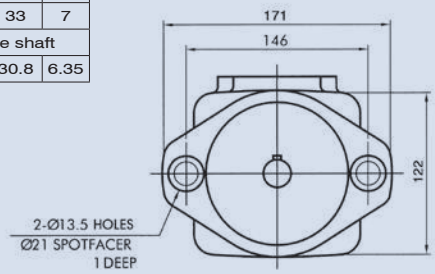

SVQ25

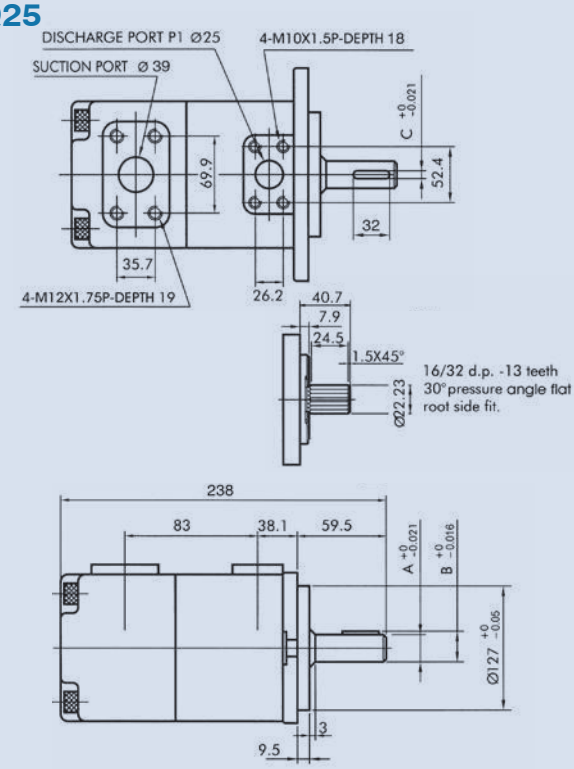

FOOT TYPE

Unit:mm

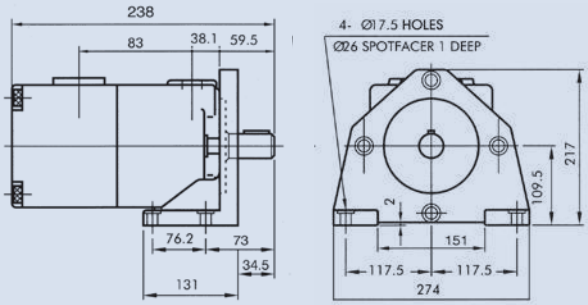

	A	B	C
NO.01-Shaft	ø22.23	24.5	6.35
NO.02-Shaft	ø25.4	28.18	6.35
NO.03-Shaft	ø30	33	7
NO.04-Shaft	Spline shaft		
NO.W-Shaft	ø28	30.8	6.35

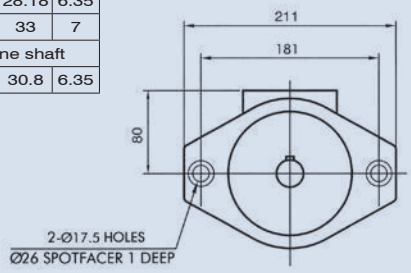

FIXED DISPLACEMENT HI-PRESSURE SINGLE VANE PUMP

C

Dimensions

VQ35

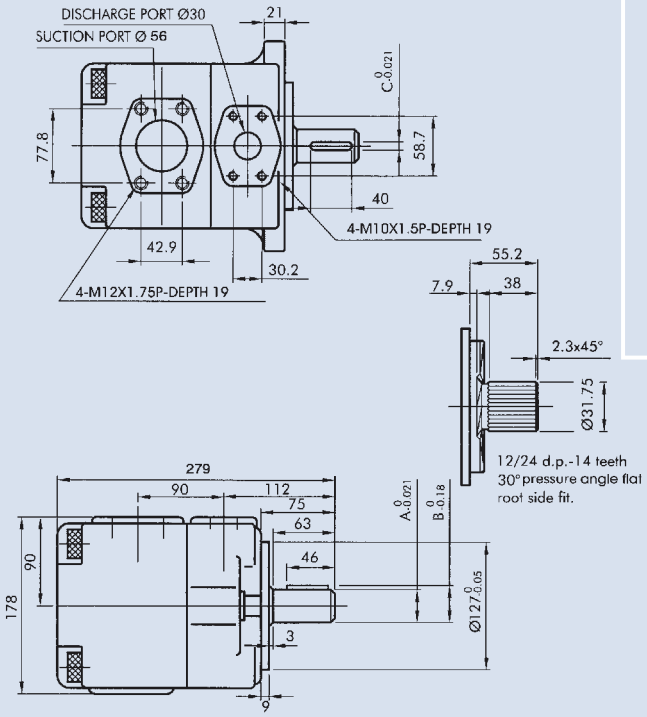

FOOT TYPE

Unit:mm

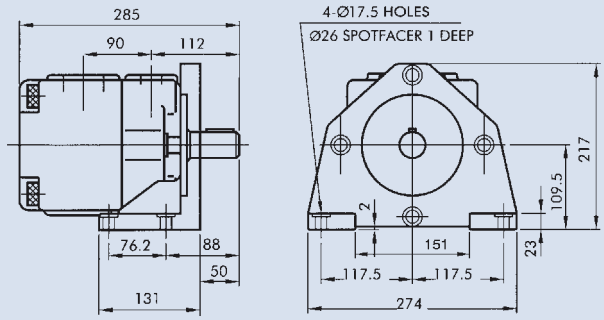

	A	B	C
NO.01-Shaft	ø31.75	35.32	7.95
NO.02-Shaft	ø34.9	38.56	7.95
NO.03-Shaft	Spline shaft		

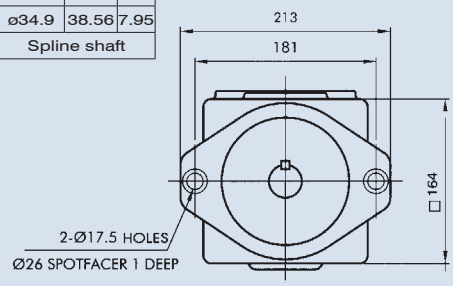

SVQ35

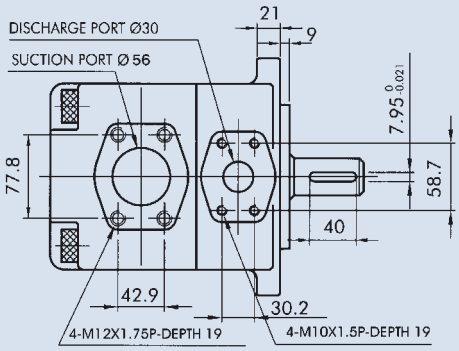

FOOT TYPE

Unit:mm

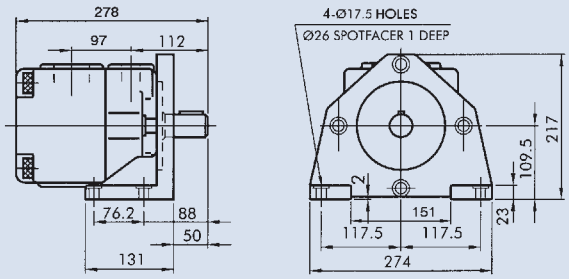

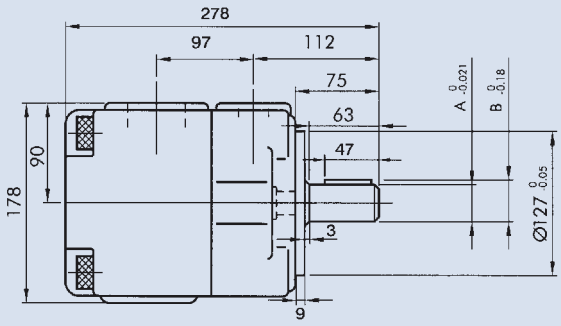

	A	B
NO.01-Shaft	ø31.75	35.32
NO.02-Shaft	ø34.9	38.56

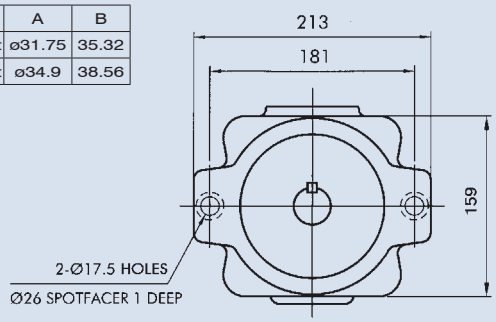

FIXED DISPLACEMENT HI-PRESSURE SINGLE VANE PUMP

Dimensions

VQ45

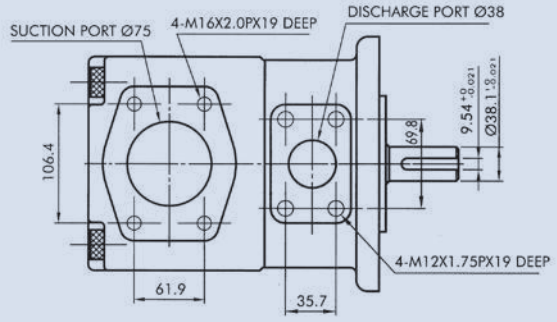

FOOT TYPE

Unit:mm

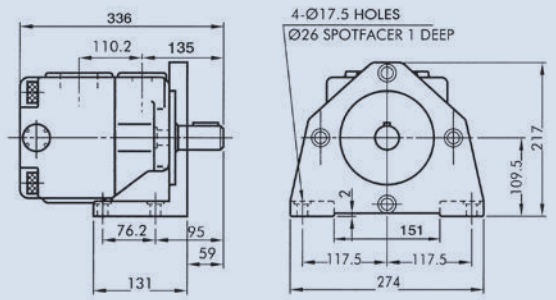

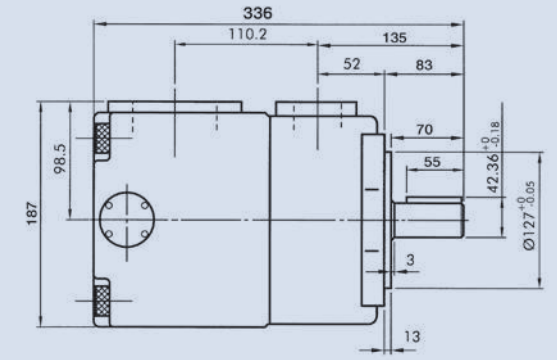

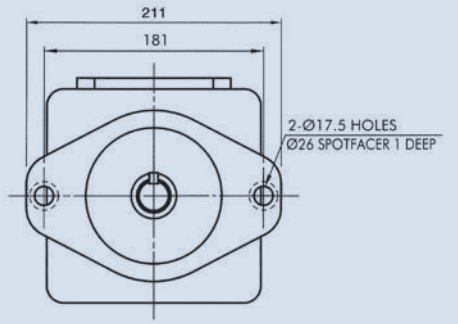

DVQ45

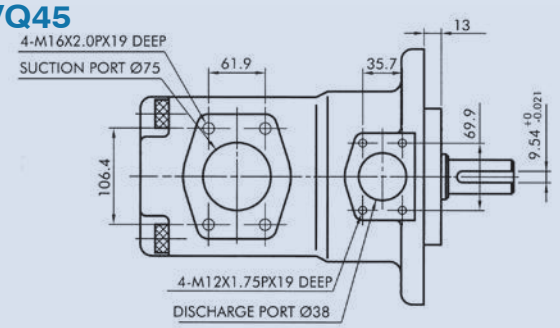

FOOT TYPE

Unit:mm

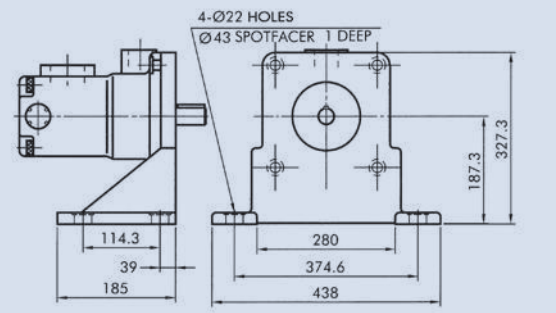

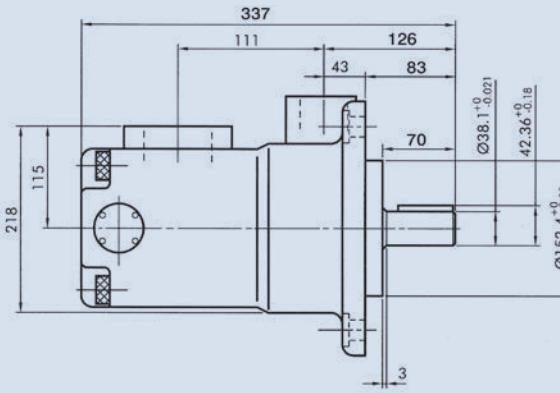

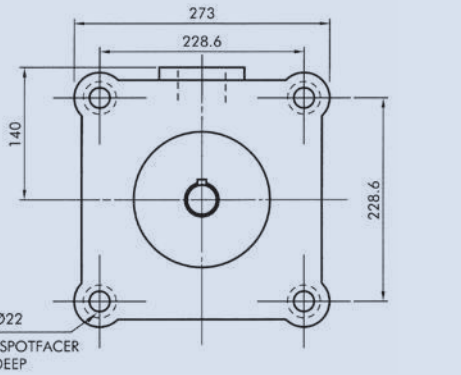

FIXED DISPLACEMENT HI-PRESSURE SINGLE VANE PUMP

C

Dimensions

SVQ45

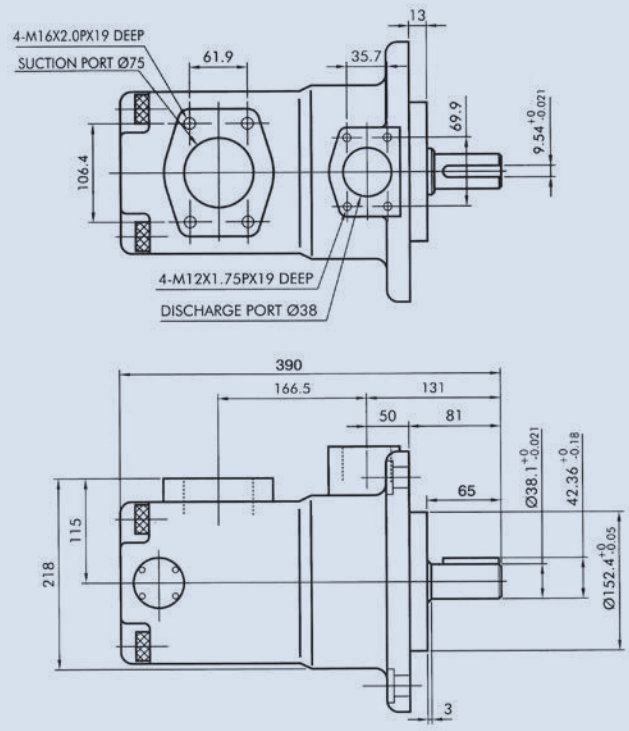

FOOT TYPE

Unit:mm

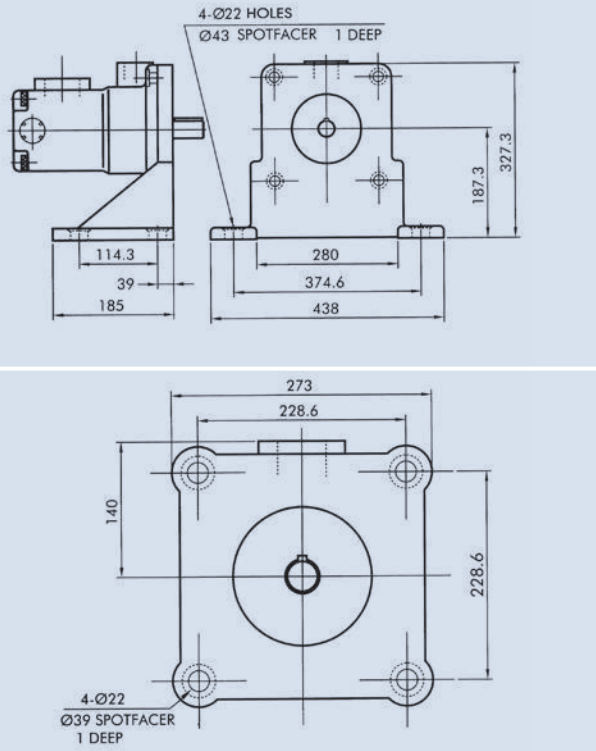

Parts list

Item No.	Description	VQ15	VQ25 (SVQ25)	VQ35 (SVQ35)	VQ45 (SVQ45)
1	Retainer Ring	R47	R52	R72	R85
2	Seal	22x47x7	30x52x11	(VQ35) 35x55x11 (SVQ35) 38x72x12	50x85x10
3	Bearing	6204	6205	6207	6209
4	Shaft				
5	Key				
6	Housing				
7	Cartridge Kit				
8	O-Ring	G85	G100	G135	G140
9	Cover				
10	Cap-Screw	M10x1.5x85	(VQ25) M12x1.75x110 (SVQ25) M12x1.75x120	M16x2.0x130	(VQ45) M16x2.0x160 (SVQ45) M20x2.5x160
11	O-ring & Endless Back-up Ring	P36	P46	65.5x3.5	G80
12	O-ring & Endless Back-up Ring	71.5x3.5	90.2x3.5	G115	G130

FIXED DISPLACEMENT HI-PRESSURE SINGLE VANE PUMP

Decomposition Chart

VQ15
VQ25
VQ35
VQ45

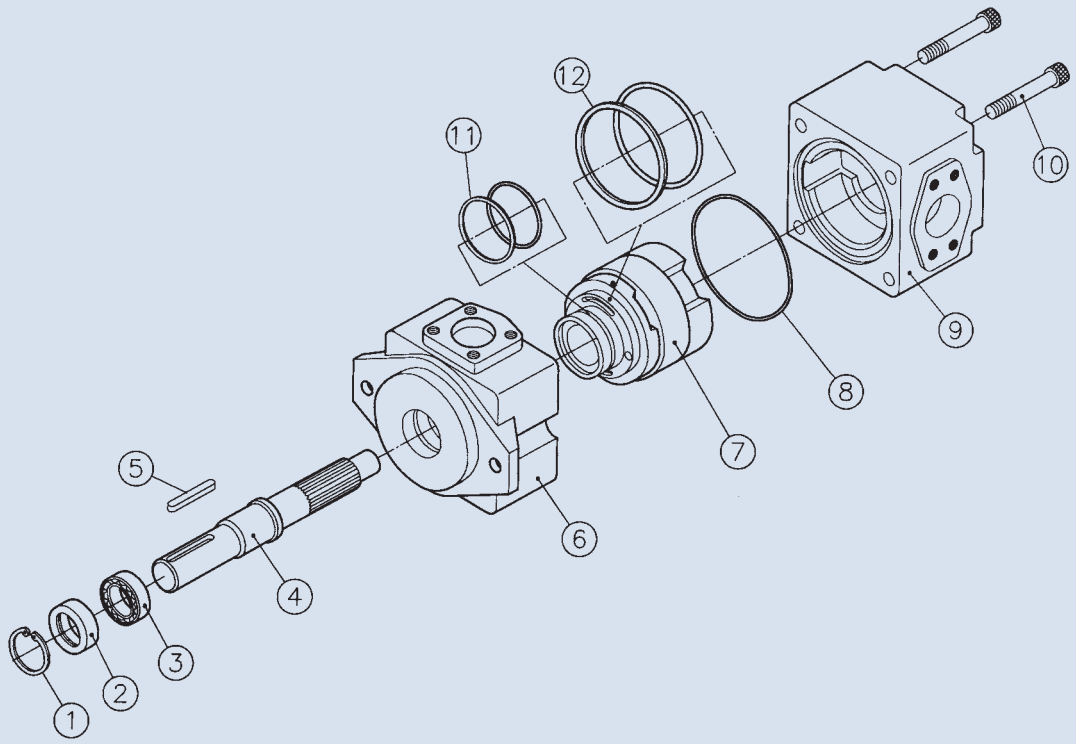

SVQ25
SVQ35
SVQ45 (DVQ45)

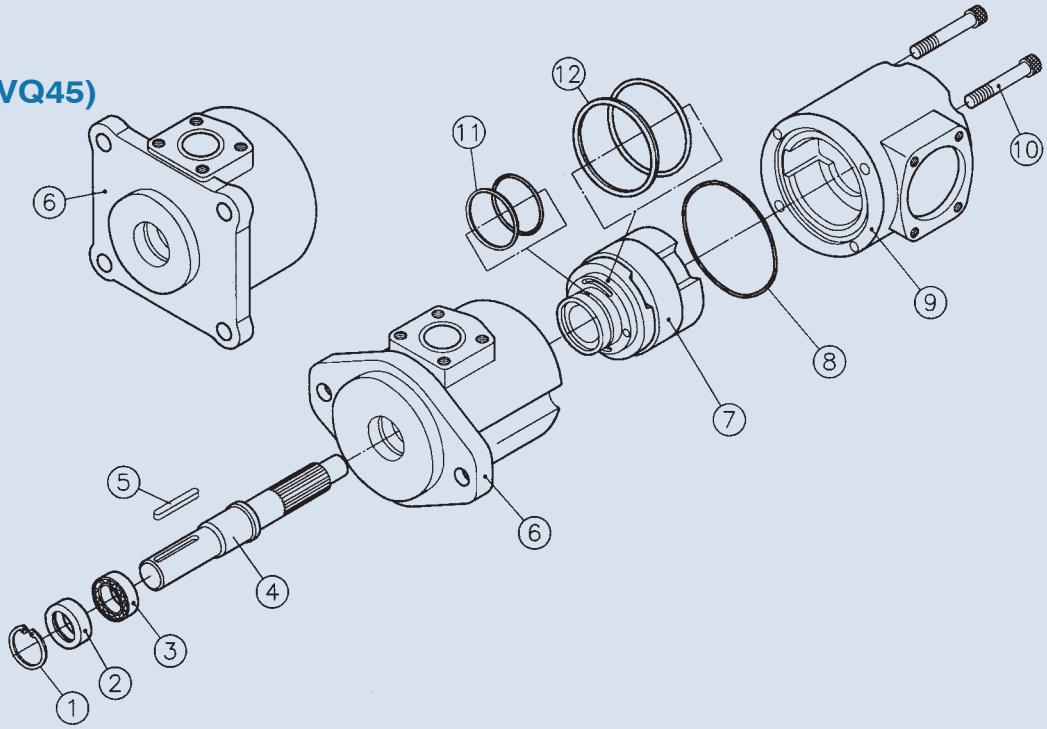

FIXED DISPLACEMENT HI-PRESSURE SINGLE VANE PUMP

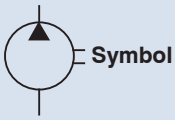

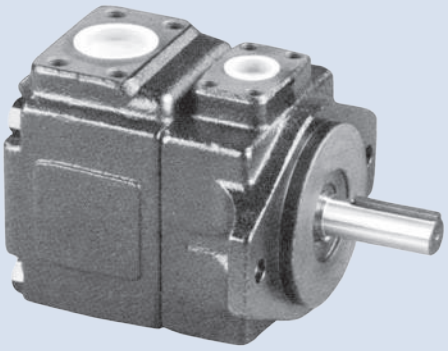

C

How to order

HVQ20, DVQ20 - 4 - F - R - A - A - 01

1 2 3 4 5 6 7

1	Model
2	Displacement cc/rev
3	Mounting type F: Flange type L: Foot type
4	Shaft rotation (viewed from shaft end) R: Clockwise L: Counter-clockwise
5	Discharge port A: Upward (normal) B: Downward R: Right side L: Left side
6	Suction port A: Upward (normal) B: Downward R: Right side L: left side
7	Shaft type 01: Normal

Specifications

Model	Displacement (cc/rev)	Max. Pressure (bar)		Running speed (rpm)		Weight (kg)	
		Cont.	Peak	Max.	Min.	Flange type	Foot type
HVQ20	4	420	480	3000	800	18.1	23.1
	6			2500			
	8						
	11			2300			
	14			1800			
	17	380	400				
	19						
	23						
DVQ25	18	230	280	1800		18	23
	22						
	26						
	32						
	38						
	43						
	47						
	52						
	60						
	65		250				
	75			1600			

FIXED DISPLACEMENT
HI-PRESSURE SINGLE VANE PUMP

Dimensions

HVQ20

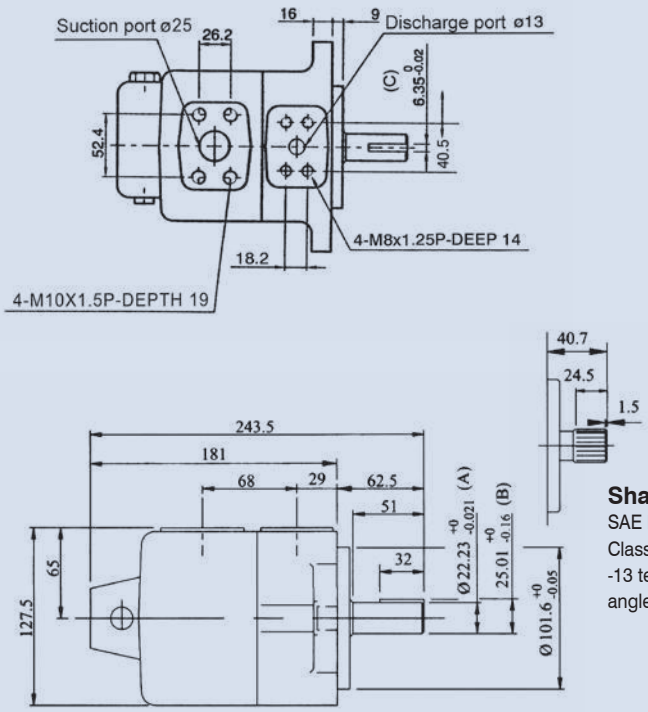

FOOT TYPE

Unit:mm

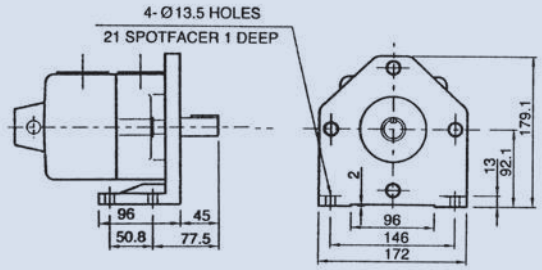

	A	B	C
NO.01-Shaft	ø22.23	25.01	6.35
NO.03-Shaft	Spline shaft		

Shaft Code 3

SAE B-B splined shaft
Class 1-J498 b 16/32 d.p.
-13 teeth 30° pressure
angle flat root side fit.

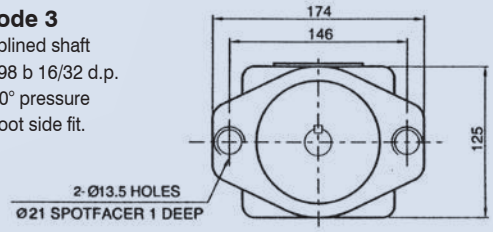

DVQ25

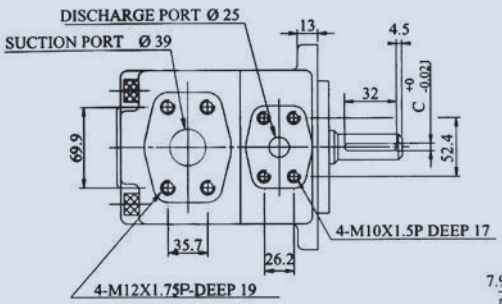

FOOT TYPE

Unit:mm

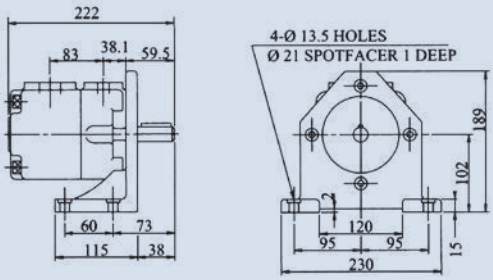

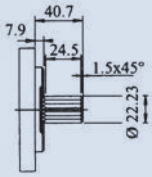

	A	B	C
NO.01-Shaft	ø22.23	24.5	6.35
NO.02-Shaft	ø25.4	28.18	6.35
NO.03-Shaft	ø30.0	33.0	7.0
NO.04-Shaft	Spline shaft		
NO.W-Shaft	ø28.0	30.8	6.35

NO.4-Shaft

16/32 d.p. -13 teeth
30° pressure angle
flat root side fit.

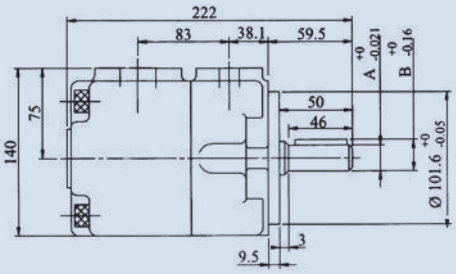

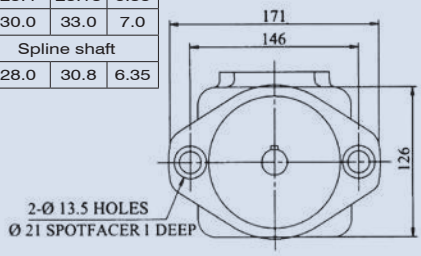

FIXED DISPLACEMENT HI-PRESSURE DOUBLE VANE PUMP

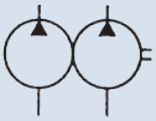

Symbol

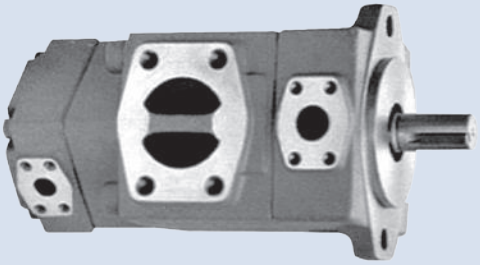

C

How to order

VQ215 - 18 - 6 - ※ - R - A - A - A - ※

1 2 3 4 5 6 7 8 9

1	Model
2	P1 Displacement cc/rev
3	P2 Displacement cc/rev
4	Mounting type F: Flange type (normal) L: Foot type
5	Shaft rotation (viewed from shaft end) R: Clockwise L: Counter-clockwise
6	P1: Discharge A: Upward (normal) B: Downward R: Right side L: Left side
7	Suction port A: Upward (normal) B: Downward R: Right side L: Left side
8	P2: Discharge port A: Upward (normal) B: Downward R: Right side L: Left side
	R1: Right upward 45° R2: Right downward 45° L1: Left upward 45° L2: Left downward 45°
9	Shaft type

Specifications

Model	P1: Displacement (cc/rev)	P2: Displacement (cc/rev)	Max. Pressure (bar)	Weight (kg)	
				Flange Type	Foot Type
VQ215	18,22,26,32,38,43,47,52,60,65,75	6,8,11,14,17,19,23,26,31,38	245	24	29
SVQ215				32	40
VQ225	18,22,26,32,38,43,47,52,60,65,75	18,22,26,32,38,43,47,52,60,65,75		30.6	35.5
VQ315	60,66,76,82,88,94,108,116,125	6,8,11,14,17,19,23,26,31,38		48	55
SVQ315				44.4	52
VQ325	60,66,76,82,88,94,108,116,125	18,22,26,32,38,43,47,52,60,65,75		50	58
VQ425	136,156,189,200,216,237	18,22,26,32,38,43,47,52,60,65,75		63	71
SVQ425				80	111
DVQ425				73	104
VQ435	136,156,189,200,216,237	60,66,76,82,88,94,108,116,125		76	93
SVQ435				91	122
DVQ435				84	115

FIXED DISPLACEMENT HI-PRESSURE DOUBLE VANE PUMP

Dimensions

VQ215

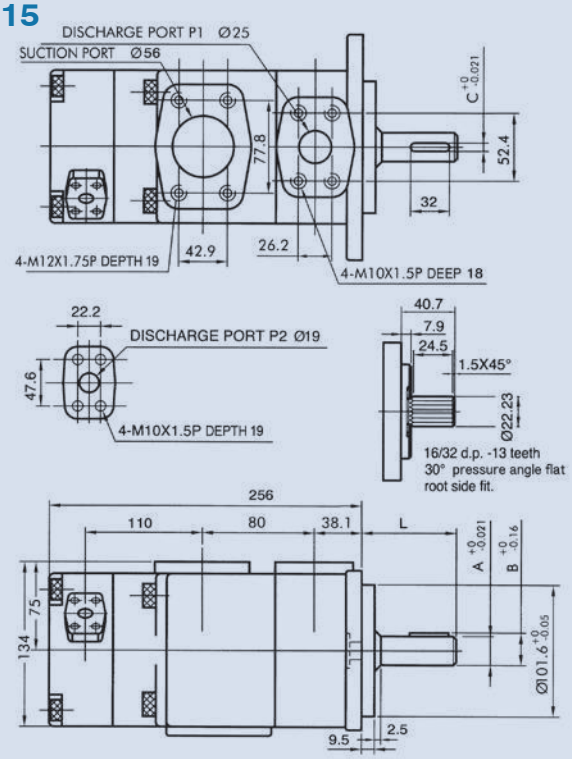

FOOT TYPE

Unit:mm

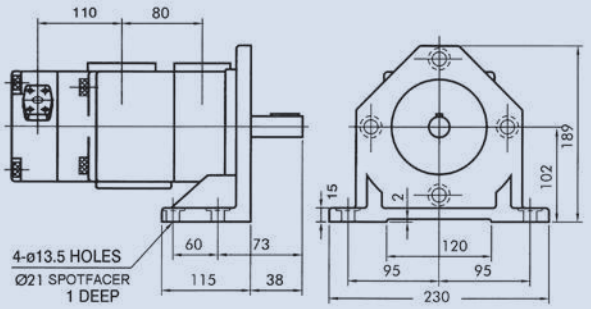

	A	B	C	L
NO.01-Shaft	ø22.23	24.5	6.35	61
NO.02-Shaft	ø25.4	28.18	6.35	61
NO.03-Shaft	ø30	33	7	68
NO.04-Shaft	Spline shaft 7/8"			

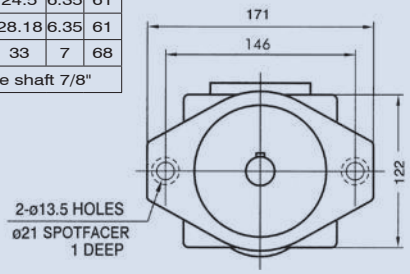

SVQ215

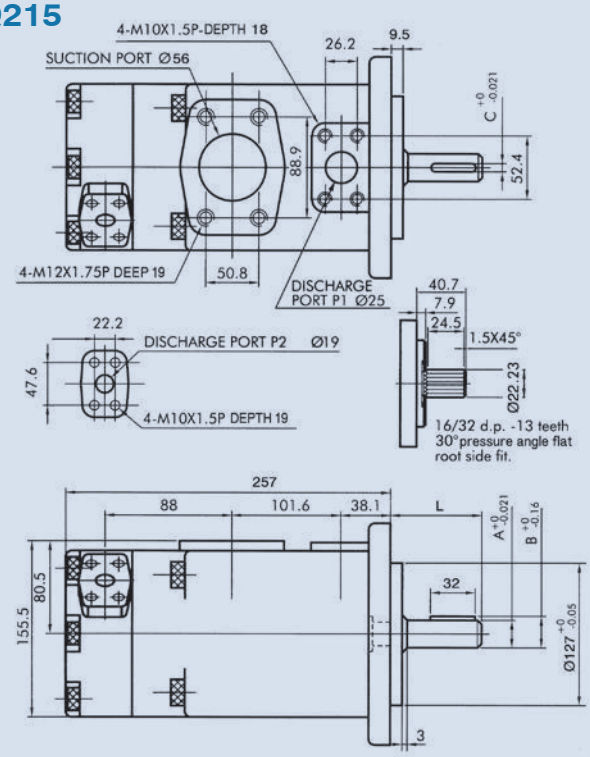

FOOT TYPE

Unit:mm

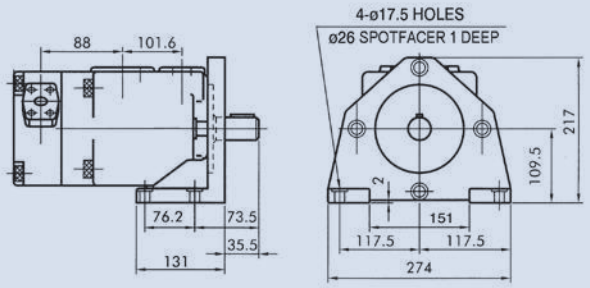

	A	B	C	L
NO.01-Shaft	ø22.23	24.5	6.35	61
NO.02-Shaft	ø25.4	28.18	6.35	61
NO.03-Shaft	ø30	33	7	68
NO.04-Shaft	Spline shaft 7/8"			

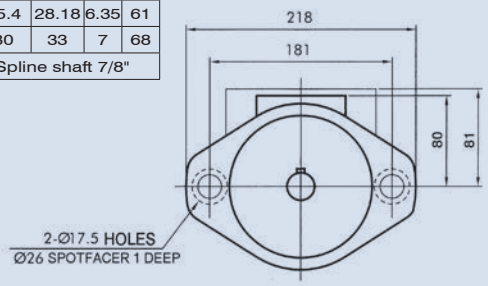

FIXED DISPLACEMENT HI-PRESSURE DOUBLE VANE PUMP

C

Dimensions

VQ225

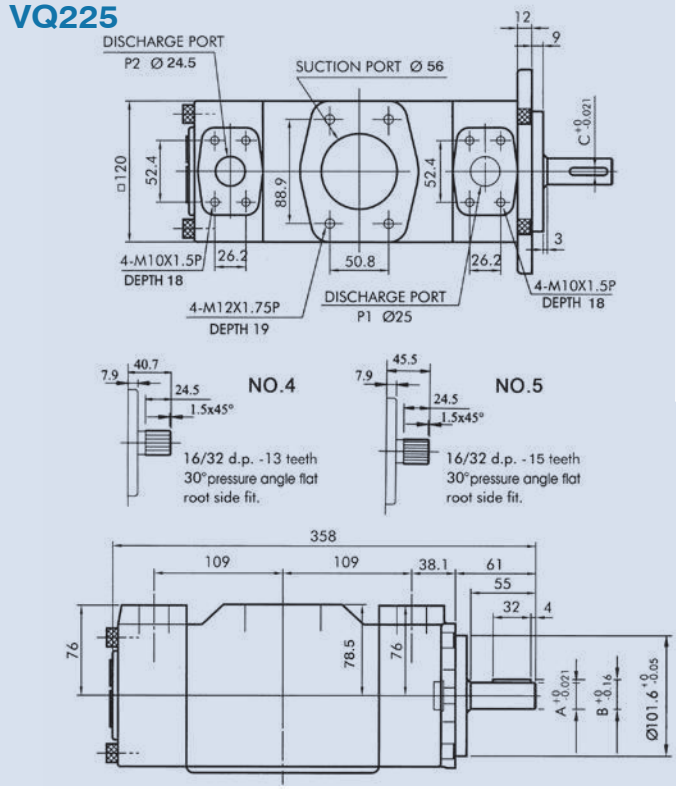

FOOT TYPE

Unit:mm

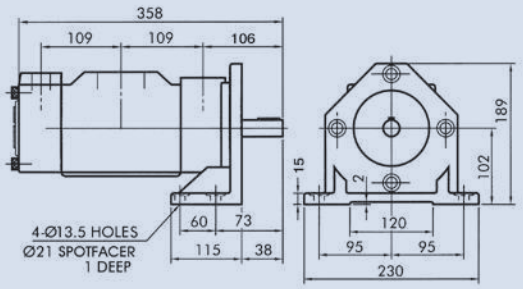

	A	B	C
NO.01-Shaft	ø22.23	24.5	6.35
NO.02-Shaft	ø25.4	28.18	6.35
NO.03-Shaft	ø30	33	7
NO.04-Shaft	Spline shaft 7/8"		
NO.05-Shaft	Spline shaft 1"		

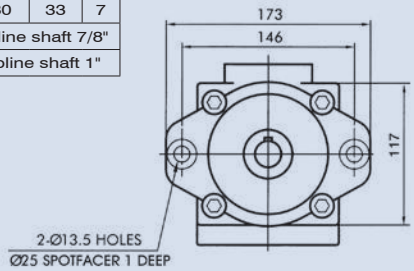

VQ315

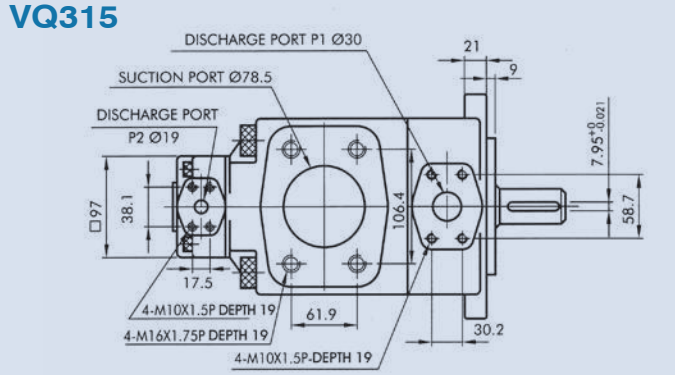

FOOT TYPE

Unit:mm

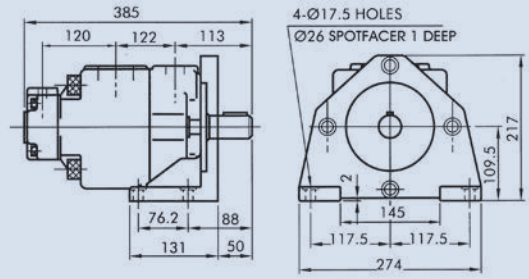

	A	B
NO.01-Shaft	ø31.75	35.32
NO.02-Shaft	ø34.9	38.56

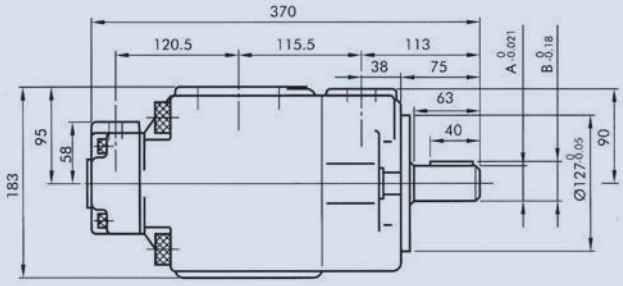

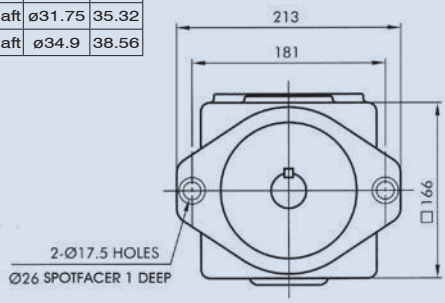

FIXED DISPLACEMENT HI-PRESSURE DOUBLE VANE PUMP

Dimensions

SVQ315

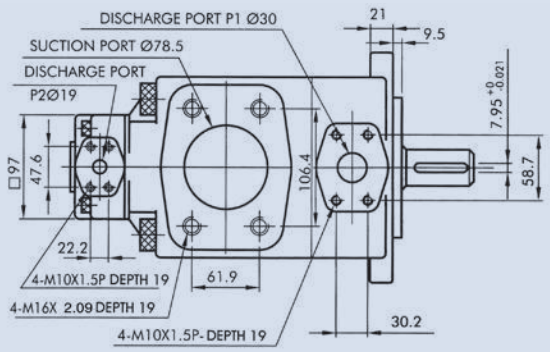

FOOT TYPE

Unit:mm

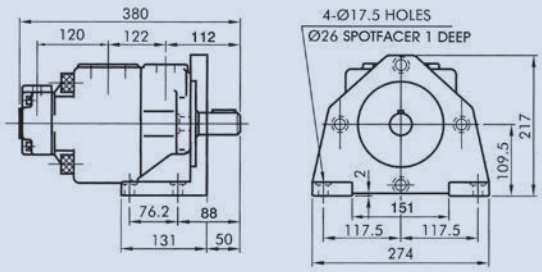

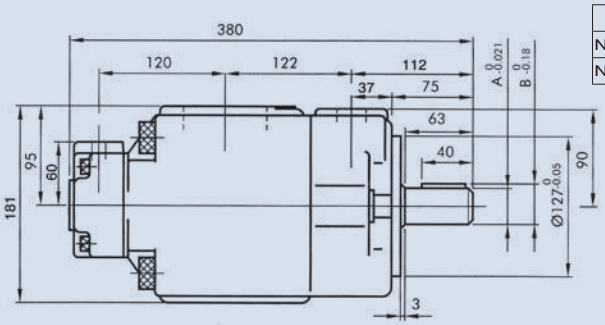

	A	B
NO.01-Shaft	ø31.75	35.32
NO.02-Shaft	ø34.9	38.56

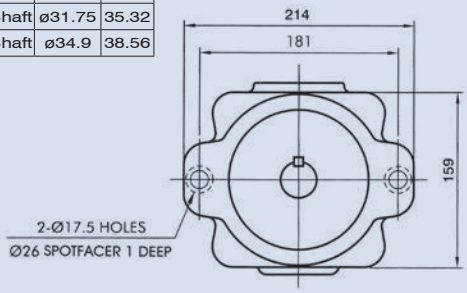

VQ325

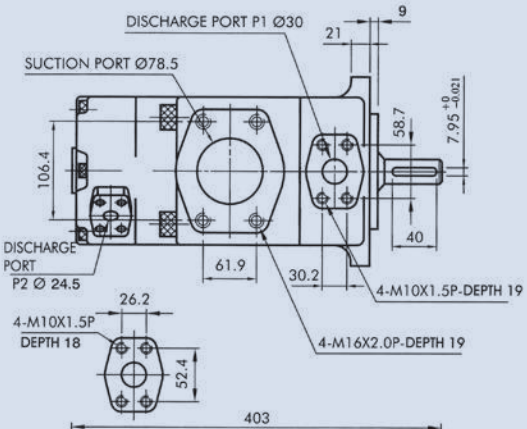

FOOT TYPE

Unit:mm

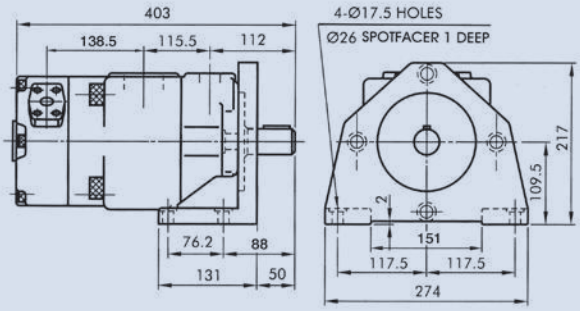

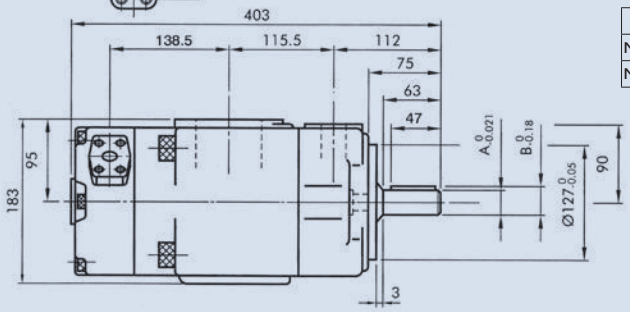

	A	B
NO.01-Shaft	ø31.75	35.32
NO.02-Shaft	ø34.9	38.56

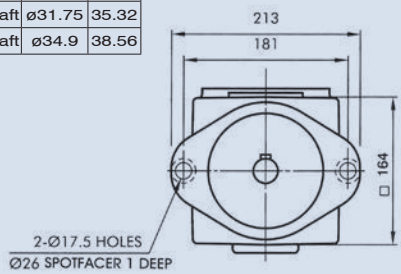

FIXED DISPLACEMENT HI-PRESSURE DOUBLE VANE PUMP

C

Dimensions

VQ425

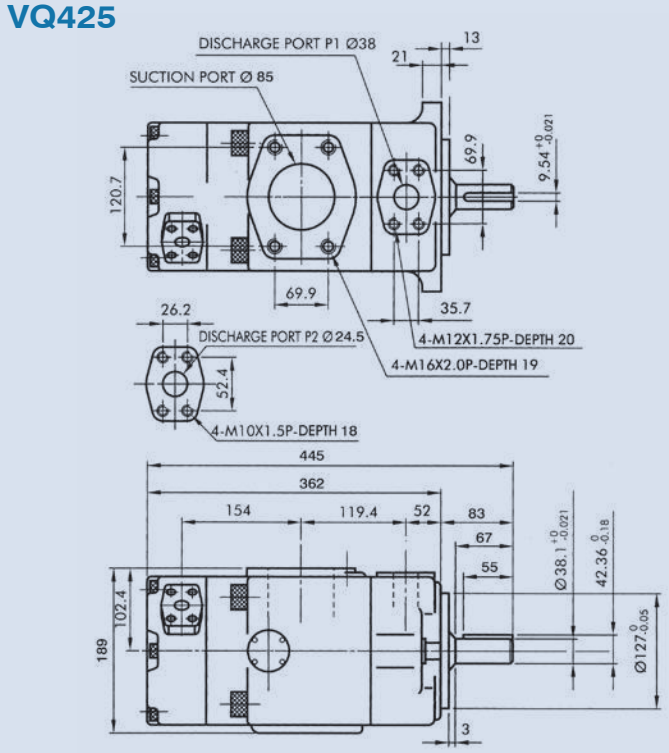

FOOT TYPE

Unit:mm

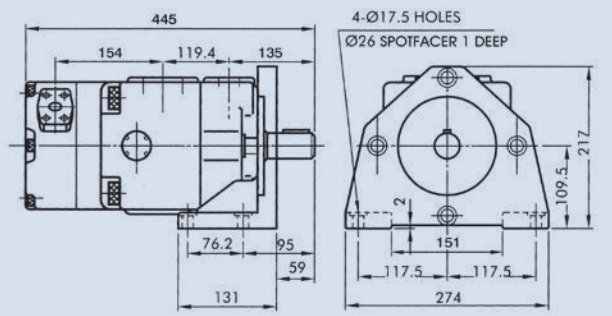

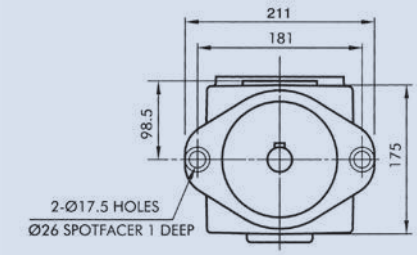

SVQ425

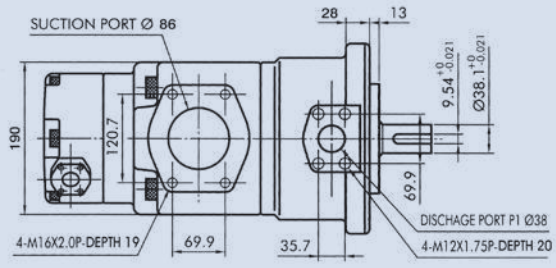

FOOT TYPE

Unit:mm

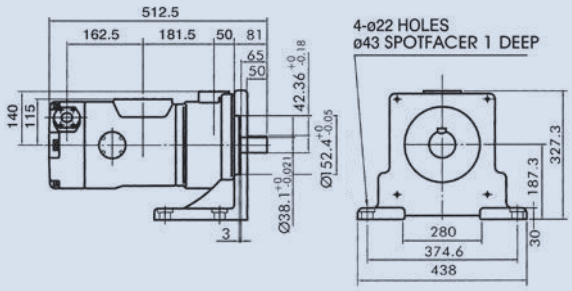

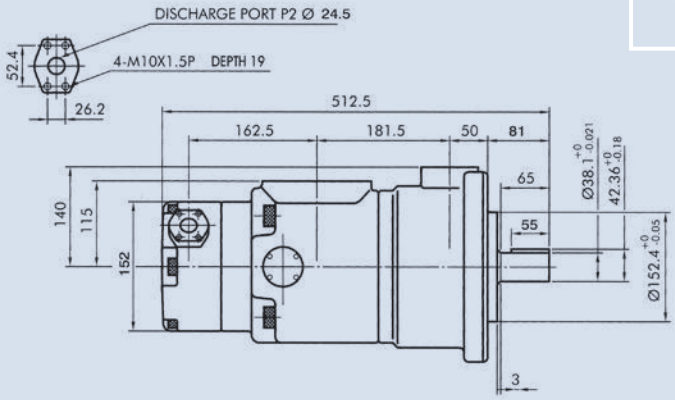

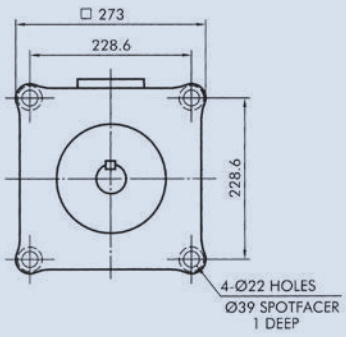

FIXED DISPLACEMENT HI-PRESSURE DOUBLE VANE PUMP

Dimensions

DVQ425

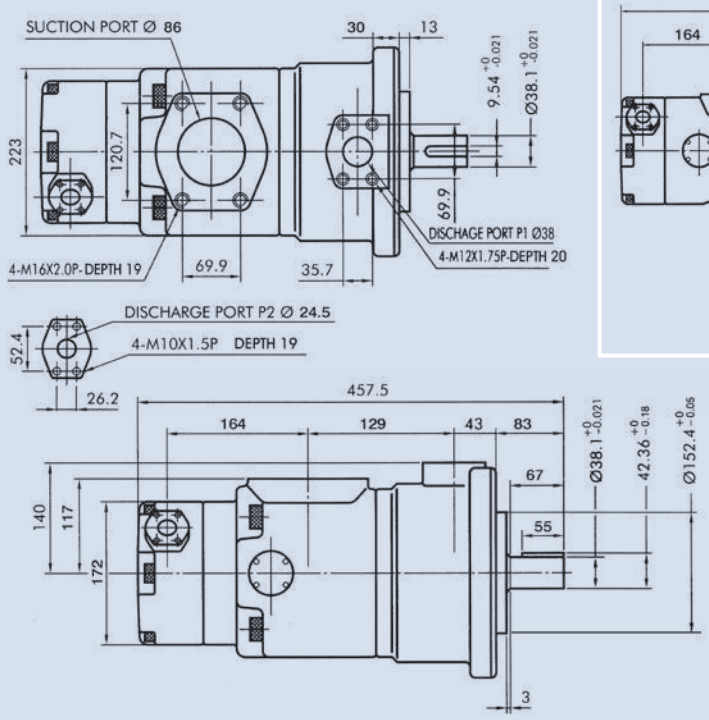

FOOT TYPE

Unit:mm

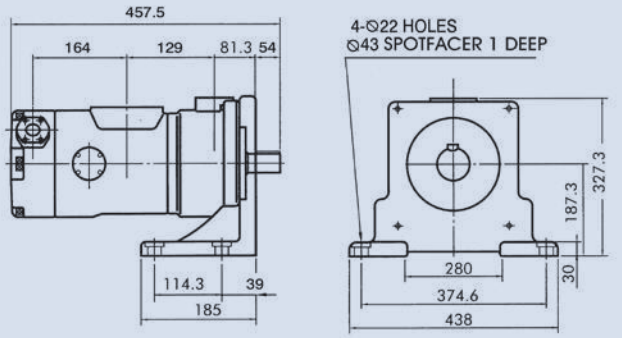

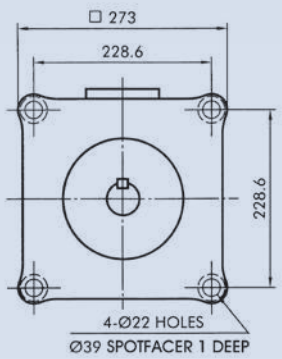

VQ435

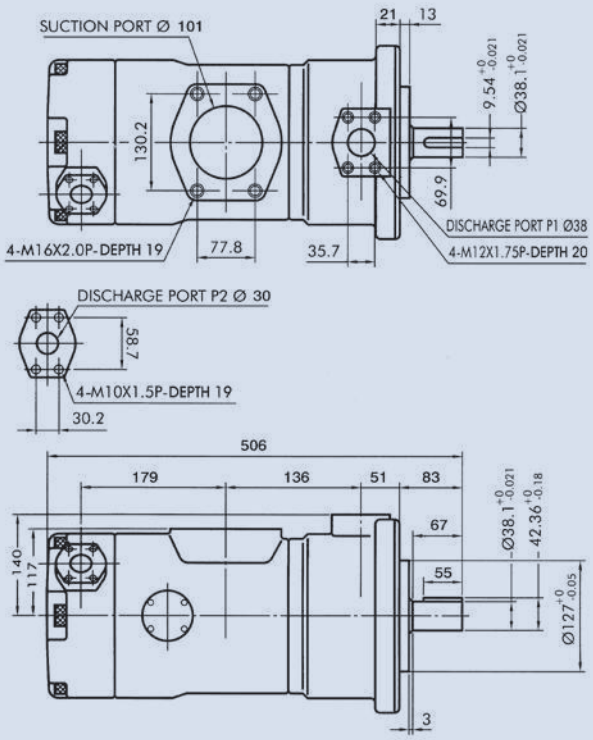

FOOT TYPE

Unit:mm

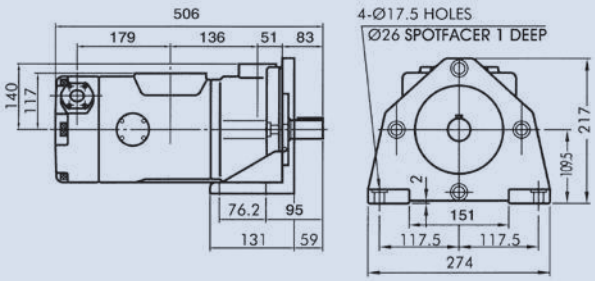

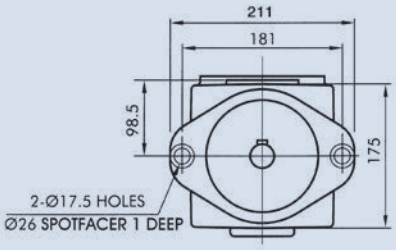

FIXED DISPLACEMENT HI-PRESSURE DOUBLE VANE PUMP

C

Dimensions

SVQ435

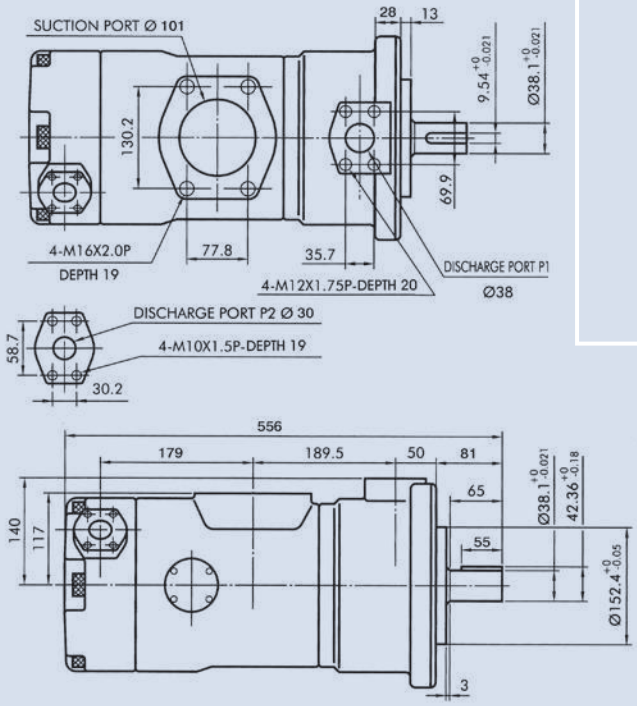

FOOT TYPE

Unit:mm

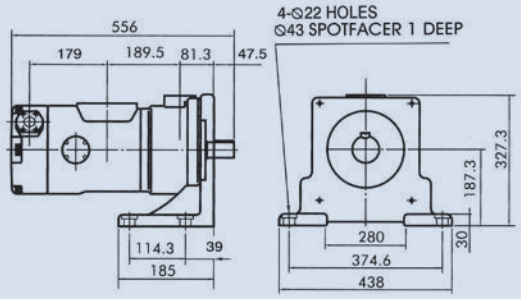

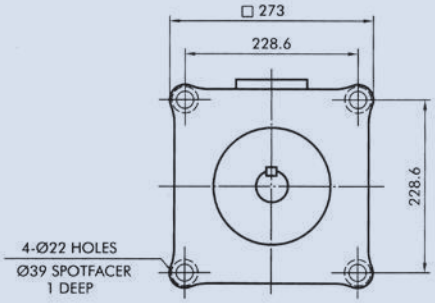

DVQ435

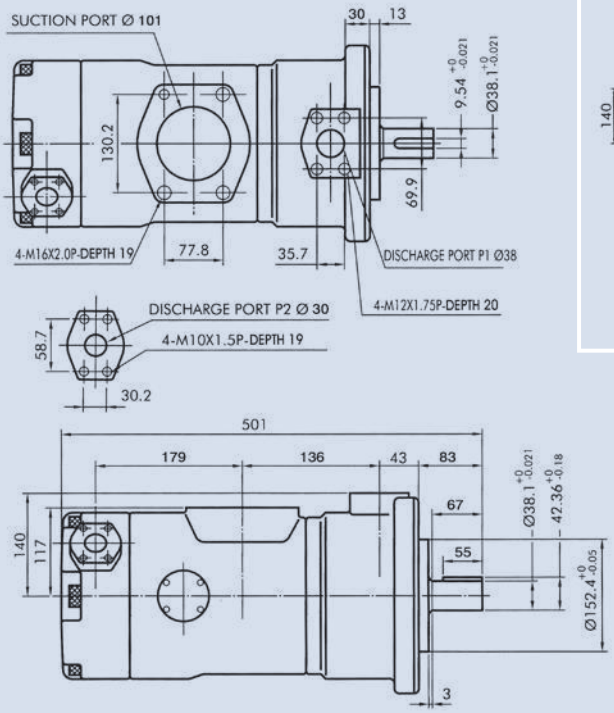

FOOT TYPE

Unit:mm

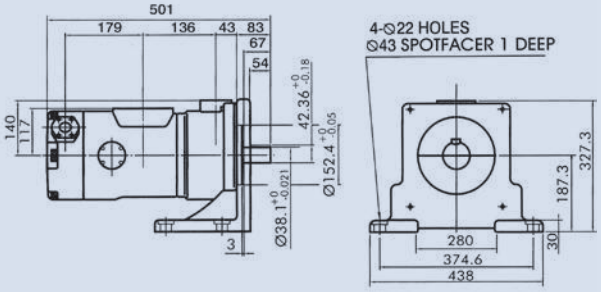

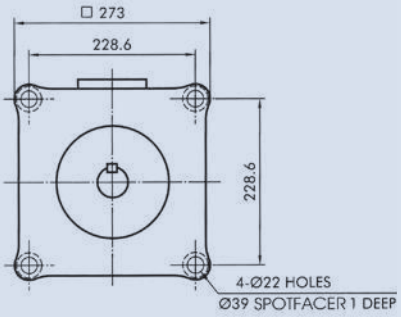

DOUBLE LIPS AND PISTON TYPE SINGLE VANE PUMP

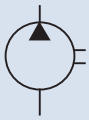

Symbol

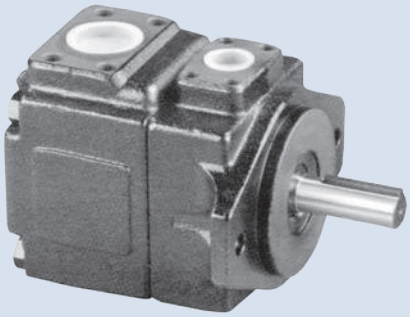

C

How to order

KT6C, KT6D, KT6E - 014 - 1 R 00 - B 1

1 2 3 4 5 6 7

1	Model
2	Cam ring
3	Shaft type
4	Shaft rotation (viewed from shaft end) R: Clockwise L: Counter-clockwise
5	Porting combination 00=normal
6	Design letter
7	Seal class 1=S1 (for mineral oil) 4=S4 (for fire resistant fluids) 5=S5 (for mineral oil and fire resistant fluids) WEIGHT KT6C: 15.7kg KT6D: 24kg KT6E: 43.3kg

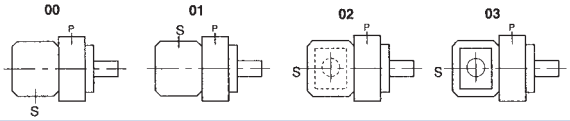

P=Pressure port
S=Suction port

Specifications

Model	Series	Displacement (cc/rev)	Delivery (lpm) At 1500rpm			Input Power (kw) At 1500rpm			Runing Speed (rpm)		MAX. Pressure (bar)
			p=0 bar	p=140 bar	p=240 bar	p=7 bar	p=140 bar	p=240 bar	Max.	Min.	
KT6C	003	10.8	16.2	11.2	7.7	1.3	5.3	8.4	2800	600	300
	005	17.2	27.0	21.0	18.0	1.4	7.5	12.2			
	006	21.3	31.9	26.9	23.4	1.5	8.9	14.7			
	008	26.4	39.6	34.6	31.1	1.6	10.7	17.7			
	010	34.1	51.1	46.1	42.6	1.7	13.4	22.3			
	012	37.1	55.6	50.6	47.1	1.7	14.4	24.1			
	014	46.0	69.0	64.0	60.5	1.9	17.6	29.5			
	017	58.3	87.4	82.4	78.9	2.1	21.9	36.9			
	020	63.8	95.7	90.7	87.2	2.2	23.82	40.2			
	022	70.3	105.4	100.4	96.9	2.3	26.1	44.1			
	025	79.3	118.9	113.9	110.4	2.5	29.2	49.5	2500		230
	028	88.8	133.2	128.2	125.8	2.8	32.7	48.5			
	031	100.0	150.0	145.0	142.6	2.8	36.5	54.4			

Port connection can be furnished with metric threads, normally UNC.

DOUBLE LIPS AND PISTON TYPE SINGLE VANE PUMP

C

Specifications

Model	Series	Displacement (cc/rev)	Delivery (lpm) At 1500 rpm			Input Power (kw) At 1500 rpm			Runing Speed (rpm)		Max. Pressure (bar)
			p=0 bar	p=140 bar	p=240 bar	p=7 bar	p=140 bar	p=240bar	Max.	Min.	
KT6D	014	47.6	71.4	62.1	55.9	2.3	18.5	30.6	2500	600	280
	017	58.2	87.3	78.0	71.8	2.5	22.2	37.0			
	020	66.0	99.0	89.7	83.5	2.8	24.9	41.7			
	024	79.5	119.3	110.0	103.8	3.0	29.6	49.8			
	028	89.7	134.5	125.2	119.0	3.2	33.2	55.9			
	031	98.3	147.4	138.1	131.9	3.3	36.2	61.0			
	035	111.0	166.5	157.2	151.0	3.5	40.7	68.7			
	038	120.3	180.4	171.1	164.9	3.7	43.9	74.3			
	042	136.0	204.0	194.7	188.5	4.0	49.4	83.7	2200		
	045	145.7	218.2	209.2	203.0	4.1	52.8	89.5			
	050	158.0	237.0	227.7	224.0	4.4	57.0	85.0			230
	061	190.5	285.7	278	–	4.6	60.6	–			140

Port connection can be furnished with metric threads, normally UNC.

Model	Series	Displacement (cc/rev)	Delivery (lpm) At 1500rpm			Input Power (kw)			Runing Speed (rpm)		Max. Pressure (bar)
			p=0 bar	p=140 bar	p=240 bar	p=7 bar	p=140 bar	p=240 bar	Max.	Min.	
KT6E	042	132.3	198.5	188.5	181.3	5.2	49.4	82.6	2300	600	280
	045	142.4	213.6	203.6	196.5	5.4	52.9	88.7			
	050	158.5	237.7	227.7	220.6	5.7	58.5	98.3			
	052	164.8	247.2	237.2	230.1	5.8	60.8	102.1			
	057	180.7	271.1	261.1	254	6.1	66.4	106.9			
	062	196.7	295.0	285.0	277.9	6.4	71.9	121.3			
	066	213.3	319.9	309.9	302.8	6.7	77.7	131.2			
	072	227.1	340.6	330.6	323.5	6.9	82.6	139.5			
	085	269.8	404.7	397.7	–	7.3	97.4	–	2000		120

Port connection can be furnished with metric threads, normally UNC.

DOUBLE LIPS AND PISTON TYPE SINGLE VANE PUMP

Dimensions

KT6C

Unit:mm

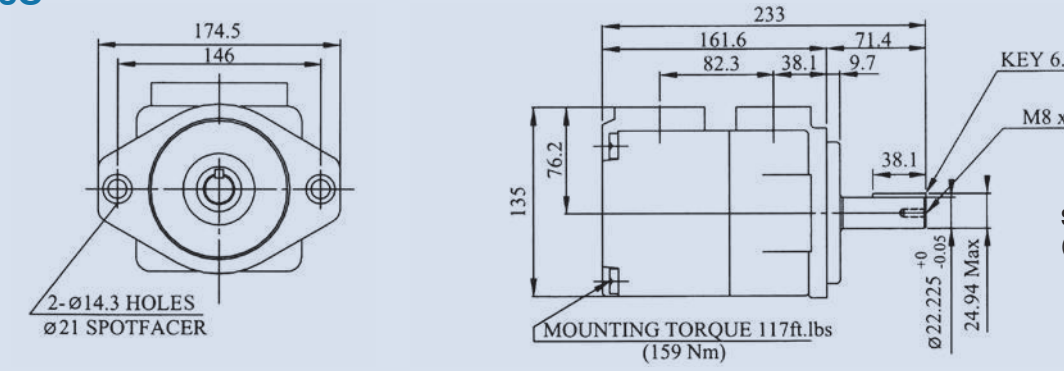

Shaft Code 1
(Keyed SAE B)

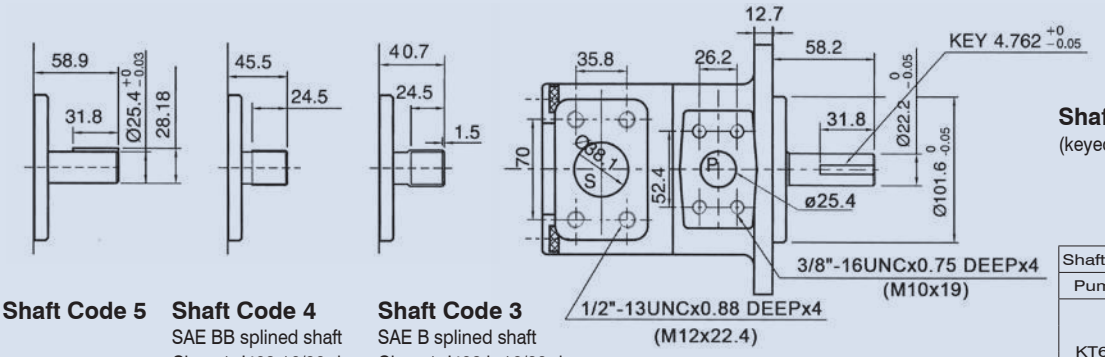

Shaft Code 2
(keyed no SAE)

Shaft Code 5

Shaft Code 4
SAE BB splined shaft
Class 1-J498 16/32 d.p.
-15 teeth 30° pressure
angle flat root side fit.

Shaft Code 3
SAE B splined shaft
Class 1-J498 b 16/32 d.p.
-13 teeth 30° pressure
angle flat root side fit.

Shaft torque limits (cc/rev*bar)		
Pump	Shaft	Vp x P max.
KT6C	1	16500
	2	14300
	3	20600
	4	20600

Performance curves

KT6C Power loss hydromechanics (typical)

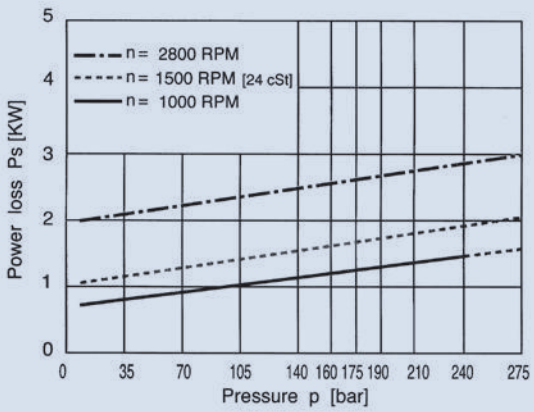

KT6C Permissble radial load

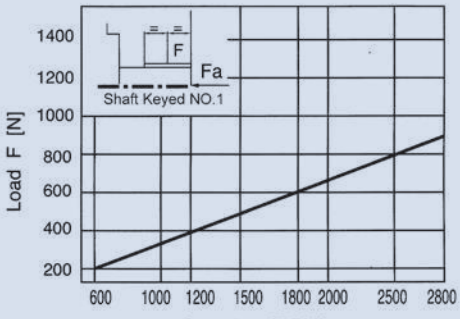

Maximum axial load permissible Fa = 800 N

DOUBLE LIPS AND PISTON TYPE SINGLE VANE PUMP

C

Dimensions

KT6D

Unit:mm

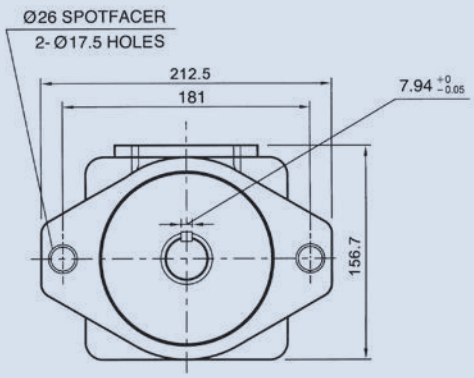

Shaft Code 1
(Keyed SAE C)

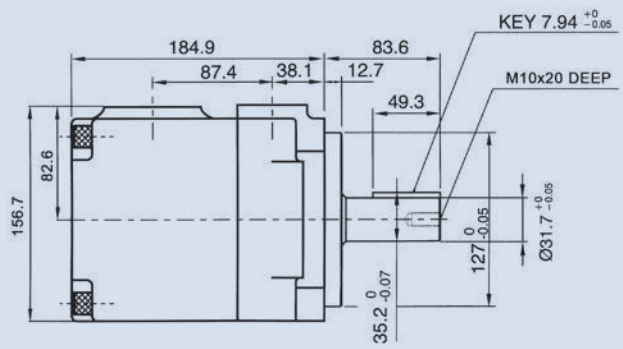

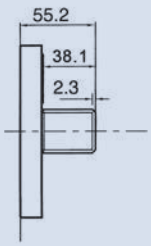

Shaft Code 3
SAE splined shaft Class 1-J498 b 12/24 d.p. -14 teeth 30° pressure angle flat root side fit.

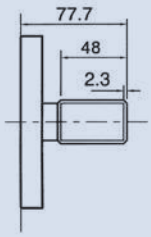

Shaft Code 4
NO SAE splined shaft Class 1-J498 b 12/24 d.p. -14 teeth 30° pressure angle flat root side fit.

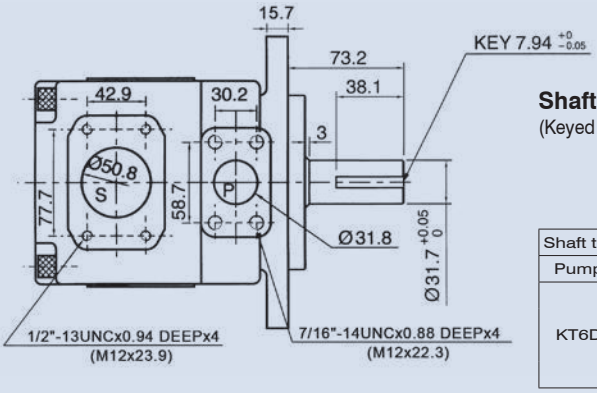

Shaft Code 2
(Keyed no SAE)

Shaft torque limits (cc/rev*bar)		
Pump	Shaft	Vp x P max.
KT6D	1	43283
	2	34590
	3	61200
	4	61200

Performance curves

KT6D Power loss hydromechanics (typical)

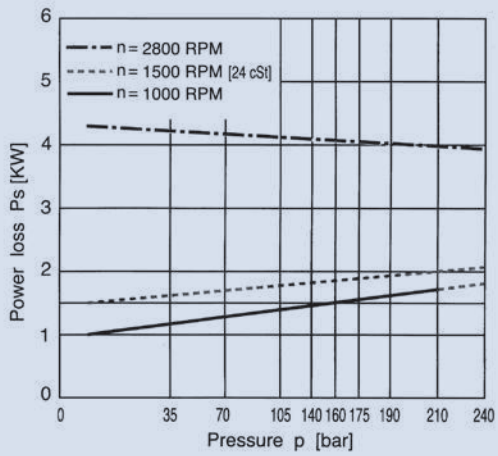

KT6D Permissible radial load

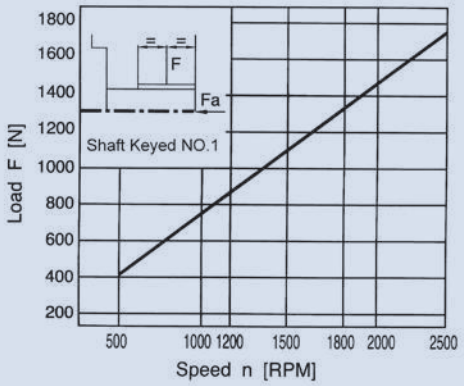

Maximum axial load permissible Fa = 1200 N

DOUBLE LIPS AND PISTON TYPE SINGLE VANE PUMP

Dimensions

KT6E

Unit:mm

Shaft Code 1
(Keyed SAE C-C)

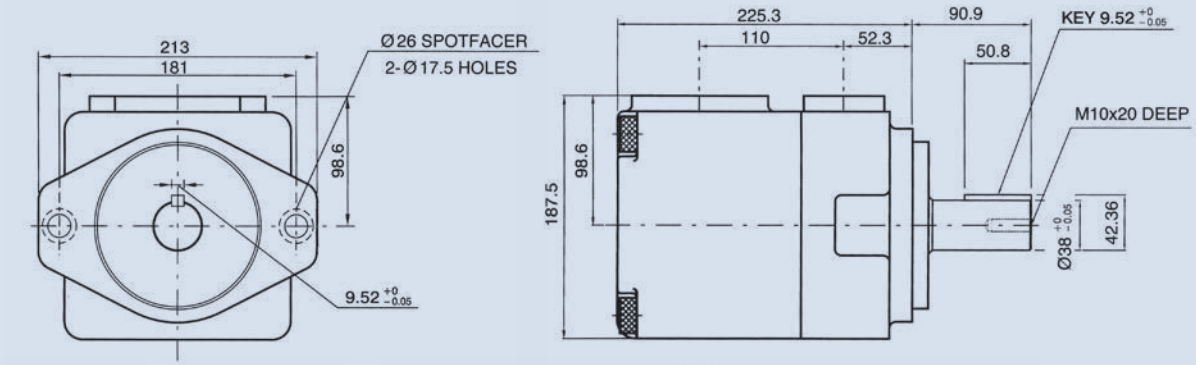

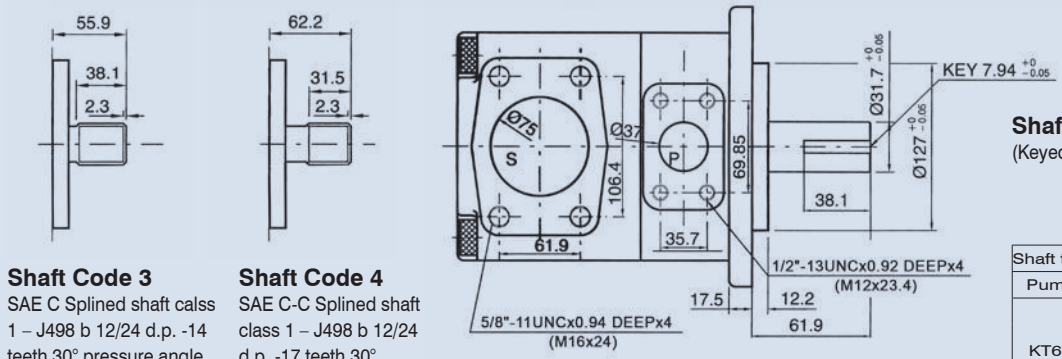

Shaft Code 2
(Keyed no SAE)

Shaft Code 3
SAE C Splined shaft calss 1 – J498 b 12/24 d.p. -14 teeth 30° pressure angle flat root side fit.

Shaft Code 4
SAE C-C Splined shaft class 1 – J498 b 12/24 d.p. -17 teeth 30° pressure angle flat root side fit.

Shaft torque limits (cc/rev x bar)		
Pump	Shaft	Vp x P max.
KT6E	1	54555
	2	54590
	3	61200
	4	61200

Performance curves

KT6E Power loss hydromechanics (typical)

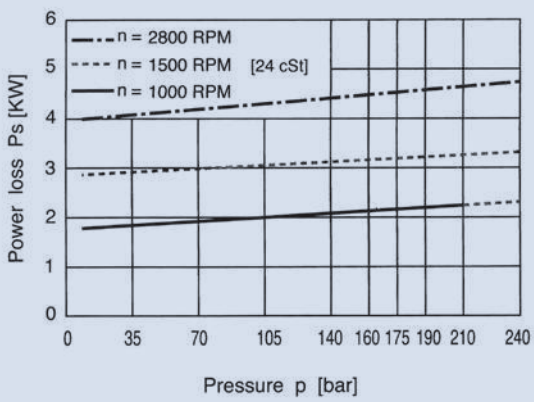

KT6E Permissible radial load

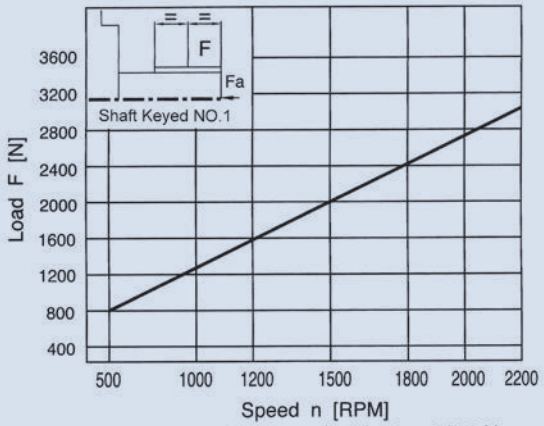

Maximum axial load permissible Fa = 2000 N

DOUBLE LIPS AND PISTON TYPE SINGLE VANE PUMP

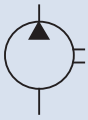

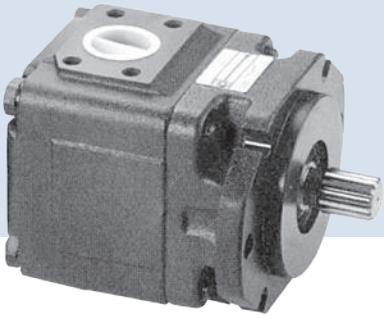

C

How to order

KT6DS - 014 - 1 R 00 - B 1
1 2 3 4 5 6 7

1	Model
2	Cam ring
3	Shaft type
4	Shaft rotation (viewed from shaft end) R: Clockwise L: Counter-clockwise
5	Porting combination 00: Normal
6	Design Letter
7	Seal class 1: S1 (for mineral oil) 4: S4 (for fire resistant fluids) 5: S5 (for mineral oil and fire resistant fluids)

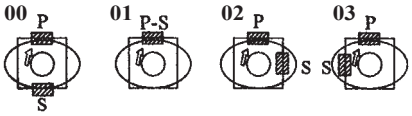

S=Suction port
P=Pressure port

Specifications

Model	Series	Displacement (cc/rev)	Delivery (lpm) At 1500 rpm			Input Power (kw) At 1500 rpm			Max. Pressure (bar)	Runing Speed (rpm)		Weight (kg)
			p=0 bar	p=140 bar	p=240 bar	p=7 bar	p=140 bar	p=240 bar		Max.	Min.	
KT6DS	014	47.6	71.4	62.1	55.9	2.3	18.5	30.6	280	2800	600	29
	017	58.2	87.3	78.0	71.8	2.5	22.2	37				
	020	66.0	99.0	89.7	83.5	2.8	24.9	41.7				
	024	79.5	119.3	110.0	103.8	3.0	29.6	49.8				
	028	89.7	134.5	125.2	119.0	3.2	33.2	55.9				
	031	98.3	147.5	138.1	131.9	3.3	36.2	61.0				
	035	111.0	166.5	157.2	151.0	3.5	40.7	68.7				
	038	120.3	180.4	171.1	164.9	3.7	43.9	74.3				
	042	136.0	204.0	194.7	188.5	4.0	49.4	83.7		2500		
	045	145.7	218.2	209.2	203.0	4.1	52.8	89.5				
	050	158.0	237.0	227.7	224.0	4.4	57	85.0	230			
	061	190.5	285.7	278	–	4.6	60.6	–	140			

Port connection can be furnished with metric threads, normally UNC.

Dimensions

KT6DS

Unit:mm

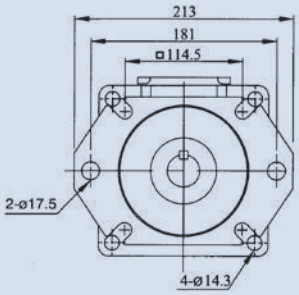

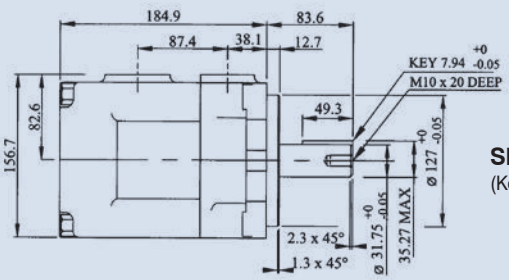

Shaft Code 1
(Keyed SAE C)

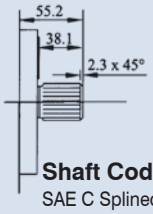

Shaft Code 3
SAE C Splined shaft calss 1 – J498 b 12/24 d.p. -14 teeth 30° pressure angle flat root side fit.

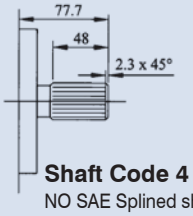

Shaft Code 4
NO SAE Splined shaft class 1 – J498 b 12/24 d.p. -14 teeth 30° pressure angle flat root side fit.

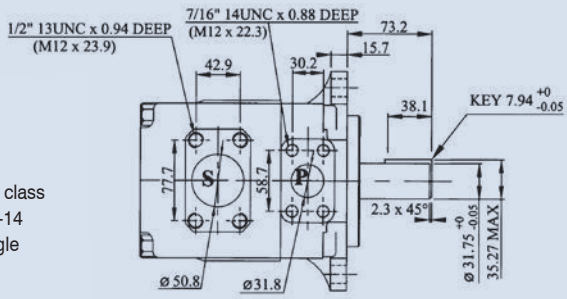

Shaft Code 2
(Keyed no SAE)

Shaft torque limits (cc/rev x bar)		
Pump	Shaft	Vp x P max.
KT6DS	1	43283
	2	34590
	3	61200
	4	61200

DOUBLE LIPS AND PISTON TYPE SINGLE VANE PUMP

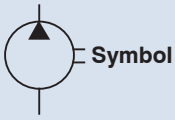

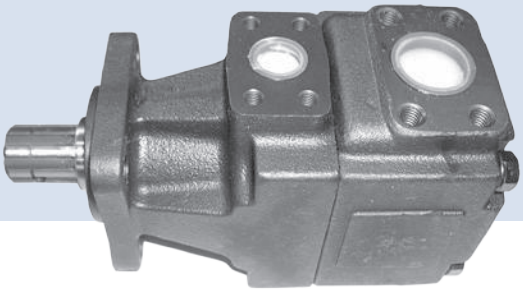

How to order

KT6GC - 022 - 6 R 00 - A 1 - 00 ※

1 2 3 4 5 6 7 8 9

1	Model
2	Cam ring
3	Shaft type 6: splined (DIN 5462)
4	Shaft rotation (viewed from shaft end) R: Clockwise L: Counter-clockwise
5	Porting combination 00: Normal
6	Design Letter
7	Seal class 1: S1 (for mineral oil)
8	Port size 00: Flange 1" BSPP 01: Flange 1" SAE 4 bolts (UNC) M1: Flange 1" SAE 4 bolts (METRIC)
9	Modifications

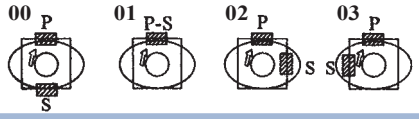

S=Suction port
P=Pressure port

Specifications

Model	Series	Displacement (cc/rev)	Delivery (lpm) At 1500 rpm			Input Power (kw) At 1500 rpm			Max. Pressure (bar)	Runing Speed (rpm)		Weight (kg)
			p=0 bar	p=140 bar	p=240 bar	p=7 bar	p=140 bar	p=240 bar		Max.	Min.	
KT6GC	003	10.8	16.2	10.7		1.3	5.3		300	3000	600	17
	005	17.2	25.8	20.3	15.8	1.4	7.5	12.2				
	006	21.3	31.9	26.5	22.0	1.5	8.9	14.7				
	008	26.4	39.6	34.1	29.6	1.6	10.7	17.7				
	010	34.1	51.1	45.7	41.2	1.7	13.4	22.3				
	012	37.1	55.6	50.2	45.7	1.7	14.4	24.1				
	014	46.0	69.0	63.5	59.0	1.9	17.6	29.5				
	017	58.3	87.4	82.0	77.5	2.1	21.9	36.9				
	020	63.8	95.7	90.2	85.7	2.2	23.8	40.2				
	022	70.3	105.4	100.0	95.5	2.3	26.1	44.1				
	025	79.3	118.9	113.5	109.0	2.5	29.2	49.5		2800	400	
	028	88.8	133.2	127.7	124.5	2.8	32.7	48.5	250			
	031	100.0	150.0	144.5	141.3	2.8	36.5	54.2				

Not to use because internal leakage greater than 50% theoretical flow.

Dimensions

KT6GC

Unit:mm

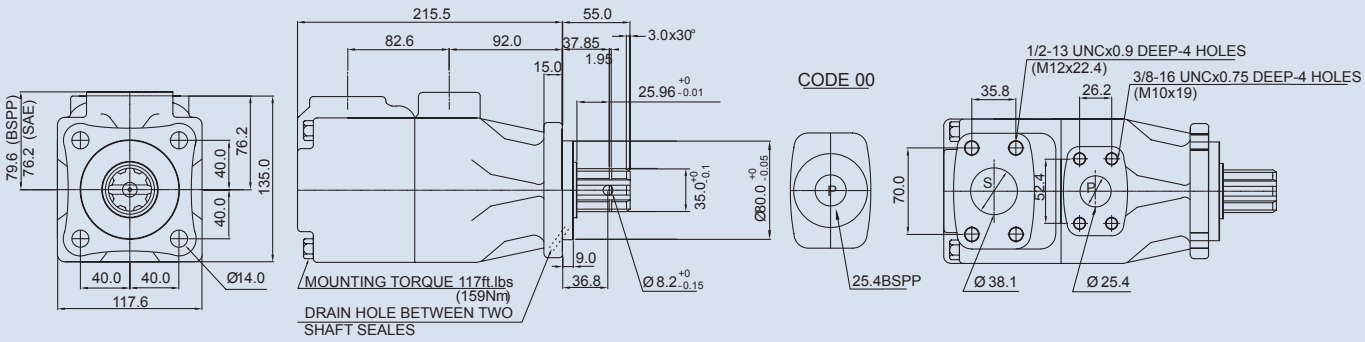

Shaft Code 6
(DIN 5462) B8x32x36

DOUBLE LIPS AND PISTON TYPE SINGLE VANE PUMP

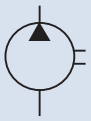

Symbol

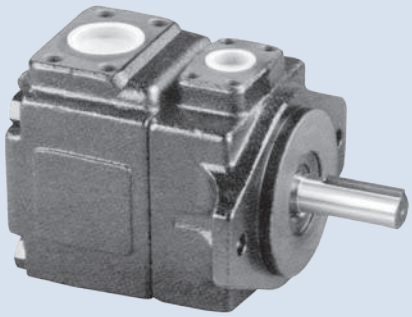

C

How to order

KT7B, KT7BS - 010 - 1 R 00 - A 1 - 00

1 2 3 4 5 6 7 8

1	Model KT7B series-100 A2 HW ISO 2 bolts 3019-2 mounting flange KT7BS series-SAE B 2 bolts Mounting flange J744
2	Cam ring
3	Shaft type KT7B-KT7BS 2-Keyed (ISO R775), KT7BS 1-Keyed (SAE B), 3-Splined (SAE B), 4-Splined (SAE BB)
4	Shaft rotation (viewed from shaft end) R: Clockwise L: Counter-clockwise
5	Porting combination 00: Normal
6	Design Letter
7	Seal class 1: S1 (for mineral oil) 4: S4 (for fire resistant fluids) 5: S5 (for mineral oil and fire resistant fluids)
8	Port size 4 bolts SAE flange (J518C)

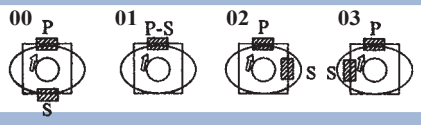

S=Suction port
P=Pressure port

PORT	UNC KT7BS		Metric KT7B-KT7BS	
	00	01	M0	M1
P	1"	3/4"	1"	3/4"
S	1 1/2"			

Specifications

Model	Series	Displacement (cc/rev)	Delivery (lpm) At 1800 rpm			Input Power (kw) At 1800 rpm			Max.Pressure (bar)	Max. Speed (rpm)	Weight (kg)
			p=0 bar	p=140 bar	p=320 bar	p=7 bar	p=140 bar	p=240 bar			
KT7B KT7BS	002	5.7	10.4	8.8	6.5	0.55	2.99	6.40	320	3600	15.7
	003	9.8	17.6	15.9	13.7	0.63	4.65	10.25			
	004	12.8	23.0	21.4	19.2	0.70	5.89	13.13			
	005	15.9	28.6	26.9	24.7	0.76	7.17	16.12			
	006	19.8	35.6	33.9	31.7	0.84	8.79	19.88			
	007	22.5	40.4	38.8	36.5	0.89	9.91	22.47			
	008	24.9	44.7	43.1	40.9	0.94	10.9	24.78			
	009	28.0	50.3	48.6	46.4	1.01	12.19	27.77			
	010	31.8	57.2	55.5	53.4	1.11	13.75	31.42			
	011	34.9	62.9	61.2	59.0 1)	1.15	15.04	32.22 1)			
	012	40.9	73.7	72.1	70.1 1)	1.28	17.56	37.71 1)			
	014	45.1	80.8	79.2	77.0 1)	1.36	19.23	41.37 1)			
	015	50.0	89.8	88.3	86.5 2)	1.47	21.28	42.76 2)			

1)011, 012, 014: 300 bar Max. int 2)015: 280 bar Max. int

DOUBLE LIPS AND PISTON TYPE SINGLE VANE PUMP

Dimensions

Unit:mm

KT7BS

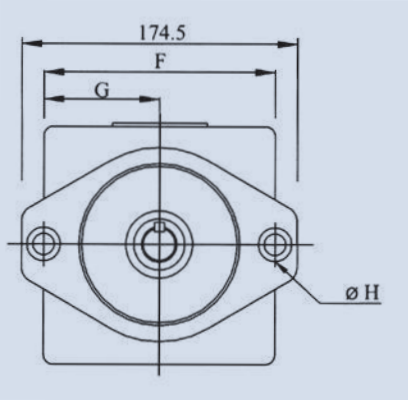

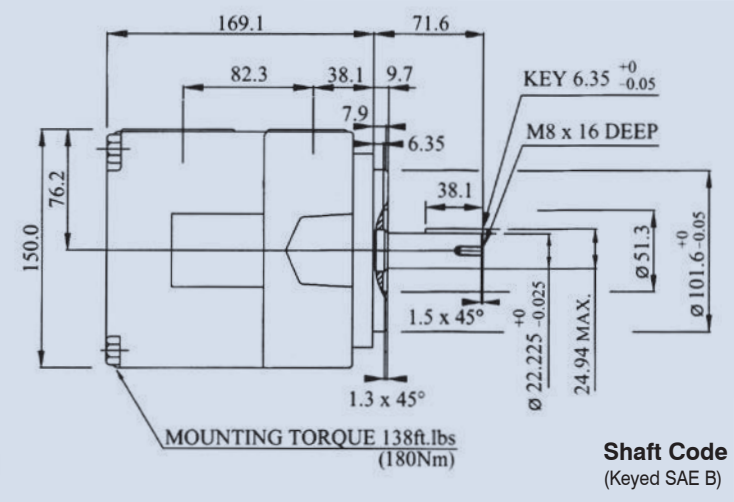

Shaft Code 1
(Keyed SAE B)

KT7B

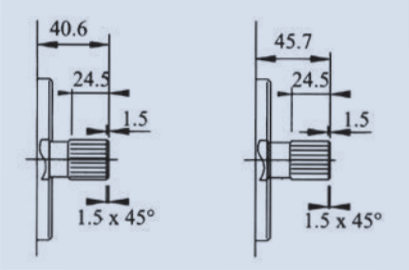

Shaft Code 3
SAE B Splined shaft calss 1 – J498 b 16/32 d.p. -13 teeth 30° pressure angle flat root side fit.

Shaft Code 4
SAE BB Splined shaft class 1 – J498 b 16/32 d.p. -15 teeth 30° pressure angle flat root side fit.

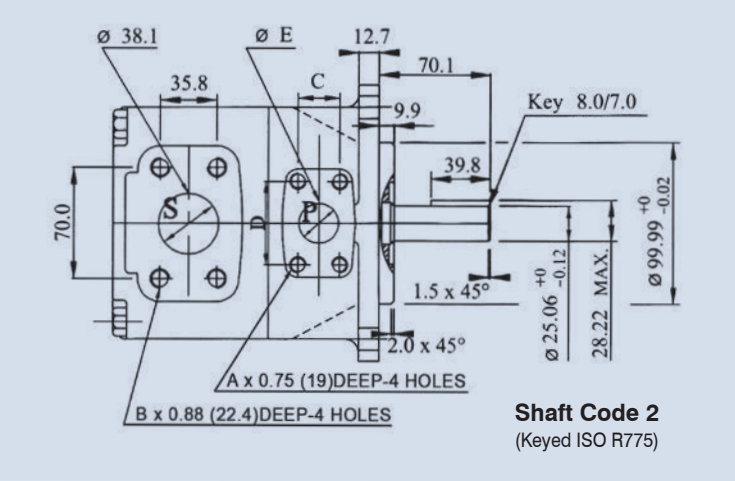

Shaft Code 2
(Keyed ISO R775)

	KT7BS		KT7B	
	00	01	M0	M1
A	3/8-16 UNC		M10	
B	1/2-13 UNC		M12	
C	1.03 (26.2)	0.874 (22.2)	1.03 (26.2)	0.874 (22.2)
D	2.06 (52.4)	1.874 (47.6)	2.06 (52.4)	1.874 (47.6)
øE	1.00 (25.4)	0.75 (19.05)	1.00 (25.4)	0.75 (19.05)
F	5.75 (146.0)		5.51 (140.0)	
G	2.87 (73.0)		2.75 (70.0)	
øH	0.56 (14.3)		0.55 (14.0)	

Shaft torque limits (cc/rev x bar)		
Pump	Shaft	Vp x P max.
KT7B	1	16516
	2	20620
	3	20620
	4	20620

DOUBLE LIPS AND PISTON TYPE DOUBLE VANE PUMP

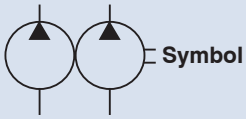

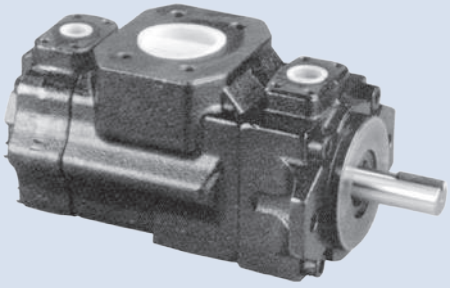

C

How to order

KT6CC - W - 002 - 008 - 1 R 00 C - 1 00

1 2 3 (P1 P2) 4 5 6 7 8 9

1	Model KT6CC (KT6C+6C) KT6DC (KT6D+6C) KT6EC (KT6E+6C) KT6ED (KT6E+6D)
2	W: Use for severe duty shaft only KT6CC-W: Code 2, S KT6DC-W: Code 5
3	Cam ring for P1 & P2
4	Shaft type
5	Shaft rotation (viewed from shaft end) R: Clockwise L: Counter-clockwise
6	Porting combination 00: Normal
7	Design letter
8	Seal class 1: S1 (for mineral oil) 4: S4 (for fire resistant fluids) 5: S5 (for mineral oil and fire resistant fluids)
	Weight KT6CC: 26kg KT6DC: 36.6kg KT6EC: 55kg KT6ED: 66kg
9	Mounting W/connection variables

KT6CC		P1=1", S=3"		P1=1", S=2 1/2" 2)	
P2		1"	3/4" 1)	1"	3/4" 1)
Code	Unc	00	01	10	11
	Metric	0M	W0	1M	W1

1) for 46 cc/rev. max.
2) for 126 cc/rev. max.

KT6DC	UNC		Metric	
	00	01	M0	M1
P2	1"	3/4"	1"	3/4"

Specifications

Model	Pressure Port	Series	Displacement (cc/rev)	Delivery (lpm) At 1500 rpm			Input Power (kw)		
				P=0 bar	P=140 bar	P=240 bar	P=7 bar	P=140 bar	P=240 bar
KT6CC	P1 & P2	003	10.8	16.2	10.7		1.3	5.3	
		005	17.2	25.8	20.8	17.3	1.4	7.5	12.2
		006	21.3	31.9	26.9	23.4	1.5	8.9	14.7
		008	26.4	39.6	34.6	31.1	1.6	10.7	17.7
		010	34.1	51.1	46.1	42.6	1.7	13.4	22.3
		012	37.1	55.6	50.6	47.1	1.7	14.4	24.1
		014	46.0	69.0	64.0	60.5	1.9	17.6	29.5
		017	58.3	87.4	82.4	78.9	2.1	21.9	36.9
		020	63.8	95.7	90.7	87.2	2.2	23.8	40.2
		022	70.3	105.4	100.4	96.9	2.3	26.1	44.1
		025*	79.3	118.9	113.9	110.4	2.5	29.2	49.5
		028*	88.8	133.2	128.2	125.8**	2.8	32.7	48.5**
		031*	100.0	150.0	145.0	142.6**	2.8	36.5	54.4**

*025-028-031=2500 R.P.M. max. **028-031=210 bar max.int. Port connection can be furnished with metric threads, normally UNC.

DOUBLE LIPS AND PISTON TYPE DOUBLE VANE PUMP

Specifications

Model	Pressure Port	Series	Displacement (cc/rev)	Delivery (lpm) At 1500 rpm			Input Power (kw)		
				P=0 bar	P=140 bar	P=240 bar	P=7 bar	P=140 bar	P=240 bar
K6DC	P1	014	47.6	71.4	62.1	55.9	2.3	18.5	30.6
		017	58.2	87.3	78.0	71.8	2.5	22.2	37.0
		020	66.0	99.0	89.7	83.5	2.8	24.9	41.7
		024	79.5	119.3	110.0	103.8	3.0	29.6	49.8
		028	89.7	134.5	125.2	119.0	3.2	33.2	55.9
		031	98.3	147.4	138.1	131.9	3.3	36.2	61.0
		035	111.0	166.5	157.2	151.0	3.5	40.7	68.7
		038	120.3	180.4	171.1	164.9	3.7	43.9	74.3
		042*	136.0	204.0	194.7	188.5	4.0	49.4	83.7
		045*	145.7	218.5	209.2	203.0	4.1	52.8	89.5
		050*	158.0	237.0	227.7	224.0*	4.4	57.0	85.0*
		061*	190.5	285.7	278*	–	4.6	60.6*	–
	P2	005	17.2	25.8	20.8	17.3	1.4	7.5	12.2
		006	21.3	31.9	26.9	23.4	1.5	8.9	14.7
		008	26.4	39.6	34.6	31.1	1.6	10.7	17.7
		010	34.1	51.1	46.1	42.6	1.7	13.4	22.3
		012	37.1	55.6	50.6	47.1	1.7	14.4	24.1
		014	46.0	69.0	64.0	60.5	1.9	17.6	29.5
		017	58.3	87.4	82.4	78.9	2.1	21.9	36.9
		020	63.8	95.7	90.7	87.2	2.2	23.8	40.2
		022	70.3	105.4	100.4	96.9	2.3	26.1	44.1
		025	79.3	118.9	113.9	110.4	2.5	29.2	49.5
		028*	88.8	133.2	128.2	125.8*	2.8	32.7	48.5*
		031*	100.0	150.0	145.0	142.6*	2.8	36.5	54.4*
KT6EC	P1	042	132.3	198.5	188.5	181.3	5.2	49.4	82.6
		045	142.4	213.6	203.6	196.5	5.4	52.9	88.7
		050	158.5	237.7	227.7	220.6	5.7	58.5	98.3
		052	164.8	247.2	237.2	230.1	5.8	60.8	102.1
		057	180.7	271.1	261.1	254	6.1	66.4	106.9
		062	196.7	295.0	285.0	277.9	6.4	71.9	121.3
		066	213.3	319.9	309.9	302.8	6.7	77.7	131.2
		072	227.1	340.6	330.6	323.5	6.9	82.6	139.5
		085*	269.8	404.7	397.7*	–	7.3	97.4*	–
	P2	005	17.2	25.8	20.8	17.3	1.4	7.5	12.2
		006	21.3	31.9	26.9	23.4	1.5	8.9	14.7
		008	26.4	39.6	34.6	31.1	1.8	10.7	17.7
		010	34.1	51.1	46.1	42.6	1.7	13.4	22.3
		012	37.1	55.6	50.6	47.1	1.7	14.4	24.1
		014	46.0	69.0	64.0	60.5	1.9	17.6	29.5
		017	58.3	87.4	82.4	78.9	2.1	21.9	36.9
		020	63.8	95.7	90.7	87.2	2.2	23.8	40.2
		022	70.3	105.4	100.4	96.9	2.3	26.1	44.1
		025	79.3	118.9	113.9	110.4	2.5	29.2	49.5
		028*	88.8	133.2	128.2	125.8*	2.8	32.7	48.5*
		031*	100.0	150.0	145.0	142.6*	2.8	36.5	54.4*

For K6DC *042~061=2200 rpm max. 028, 031, 050=230 bar. 061=140 bar max int.
For K6EC *085=2000 rpm max. 028, 031=230 bar. 085=120 bar max int.
Port connection can be furnished with metric threads, normally UNC.

DOUBLE LIPS AND PISTON TYPE DOUBLE VANE PUMP

C

Specifications

Model	Pressure Port	Series	Displacement (cc/rev)	Delivery (lpm) At 1500 rpm			Input Power (kw)		
				P=0 bar	P=140 bar	P=240 bar	P=7 bar	P=140 bar	P=240 bar
KT6ED	P1	042	132.3	198.5	188.5	181.3	5.2	49.4	82.6
		045	142.4	213.6	203.6	196.5	5.4	52.9	88.7
		050	158.5	237.7	227.7	220.6	5.7	58.5	98.3
		052	164.8	247.2	237.2	230.1	5.8	60.8	102.1
		057	180.7	271.1	261.1	254	6.1	66.4	106.9
		062	196.7	295.0	285.0	277.9	6.4	71.9	121.3
		066	213.3	319.9	309.9	302.8	6.7	77.7	131.2
		072	227.1	340.6	330.6	323.5	6.9	82.6	139.5
		085	269.8	404.7	397.7	–	7.3	97.4	–
	P2	014	47.6	71.4	62.1	55.9	2.3	18.5	30.6
		017	58.2	87.3	78	71.8	2.5	22.2	37
		020	66.0	99.0	89.7	83.5	2.8	24.9	41.7
		024	79.5	119.3	110.0	103.8	3.0	29.6	49.8
		028	89.7	134.5	125.2	119.0	3.2	33.2	55.9
		031	98.3	147.5	138.1	131.9	3.3	36.2	61.0
		035	111.0	166.5	157.2	151.0	3.5	40.7	68.7
		038	120.3	180.4	171.1	164.9	3.7	43.9	74.3
		042*	136.0	204.0	194.7	188.5	4.0	49.4	83.7
		045*	145.7	218.5	209.2	203.0	4.1	52.8	89.5
		050*	158.0	237.0	227.7	224.0*	4.4	57.0	85.0*
		061*	190.5	285.7	278	–	4.6	60.6	–

*042~061=2200 rpm max. 050=230 bar, 061=140 bar max. int. Port connection can be furnished with metric threads, normally UNC.

Permissible radial load

KT6CC

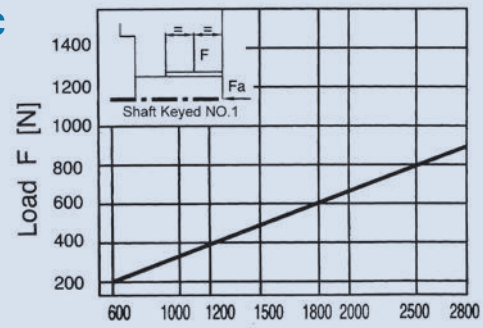

Speed n [RPM]
Maximum axial load permissible Fa = 800 N

KT6EC

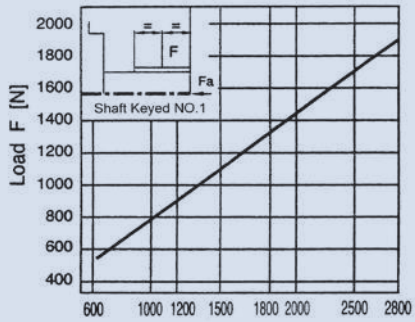

Speed n [RPM]
Maximum axial load permissible Fa = 2000 N

KT6DC

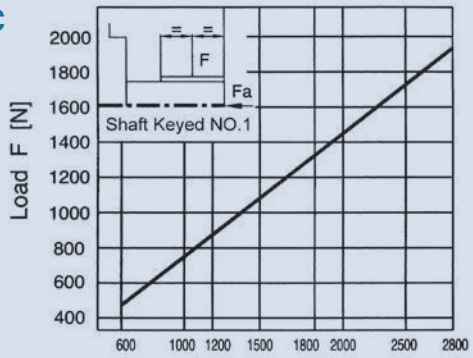

Speed n [RPM]
Maximum axial load permissible Fa = 1200 N

KT6ED

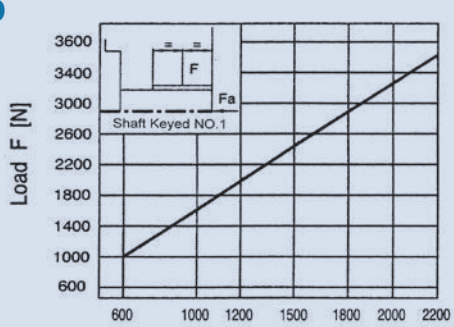

Speed n [RPM]
Maximum axial load permissible Fa = 2000 N

DOUBLE LIPS AND PISTON TYPE DOUBLE VANE PUMP

Dimensions

KT6CC

Unit:mm

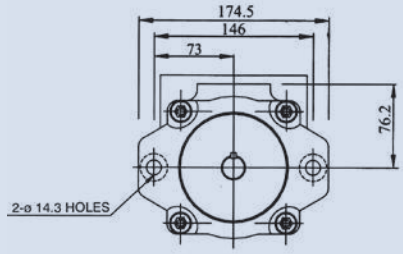

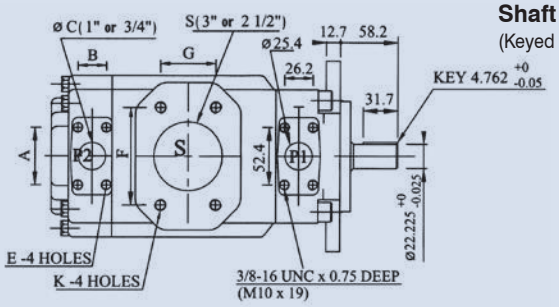

Shaft Code 1
(Keyed no SAE)

Shaft Code 2
(Keyed SAE BB)

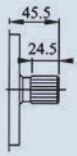

Shaft Code 3
SAE BB Splined shaft calss 1 – J498 b 16/32 d.p. -15 teeth 30° pressure angle flat root side fit.

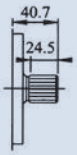

Shaft Code 5
SAE B Splined shaft class 1 – J498 b 16/32 d.p. -13 teeth 30° pressure angle flat root side fit.

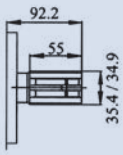

Shaft Code S
DIN 5462
B8x32x36

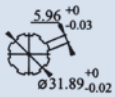

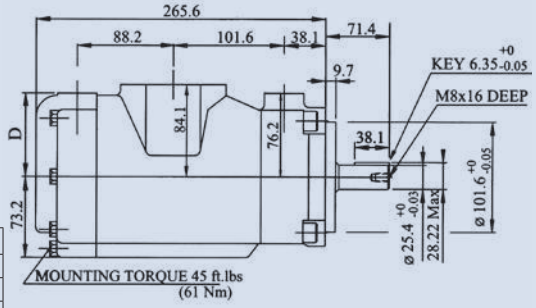

Alternate Port								
	S=3"				S=2 1/2"			
F	106.4				88.9			
G	61.9				50.8			
øH	76.2				63.5			
Code	00	01	0M	W0	10	11	1M	W1
A	52.4	47.6	52.4	47.6	52.4	47.6	52.4	47.6
B	26.2	22.2	26.2	22.2	26.2	22.2	26.2	22.2
øC	25.4	19.0	25.4	19.0	25.4	19.0	25.4	19.0
D	74.7	76.2	74.7	76.2	74.7	76.2	74.7	76.2
E	3/8"-16UNCx19 deep		M10x19 deep		3/8"-16UNCx19 deep		M10x19 deep	
K	5/8"-11UNCx28.4 deep		M16x28.4 deep		1/2"-13UNCx23.9 deep		M12x24.0 deep	

Shaft torque limits (cc/rev x bar)		
Pump	Shaft	Vp x P max. P1+P2
KT6CC	1	14300
	2	21420
	3	32670
	5	20600

KT6DC

Unit:mm

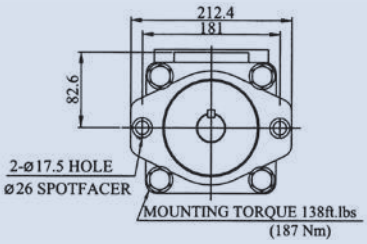

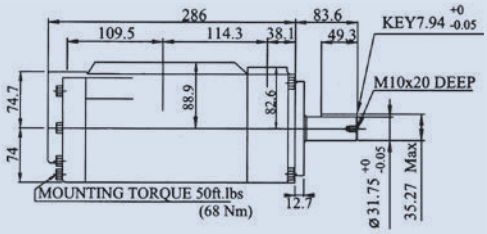

Shaft Code 1
(Keyed SAE C)

Shaft Code 3
SAE C Splined shaft calss 1 – J498 b 12/24 d.p. -14 teeth 30° pressure angle flat root side fit.

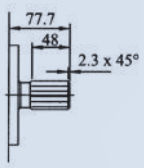

Shaft Code 4
NO SAE Splined shaft class 1 –J498 b 12/24 d.p. -14 teeth 30° pressure angle flat root side fit.

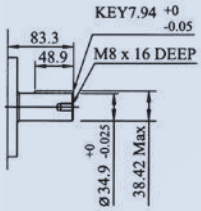

KT6DCW
Shaft code5
(Keyed no SAE)

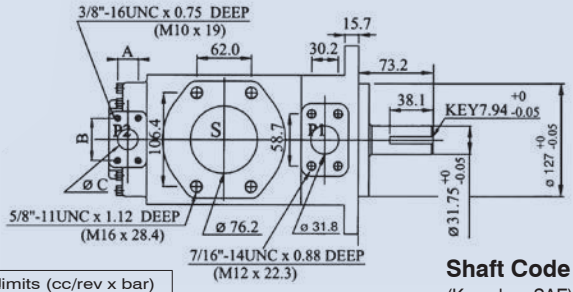

Shaft Code 2
(Keyed no SAE)

Shaft torque limits (cc/rev x bar)		
Pump	Shaft	Vp x P max. P1+P2
KT6DC	1	43240
	2	34590
	3	61200
	4	61200
	5	55600

Alternate connect. variables		
	00 & Mo	01 & M1
A	1.031 (26.2)	0.874 (22.2)
B	2.06 (52.4)	1.874 (47.6)
C	1.0 (25.4)	0.75 (19.05)

DOUBLE LIPS AND PISTON TYPE DOUBLE VANE PUMP

C

Dimensions

KT6EC

Unit:mm

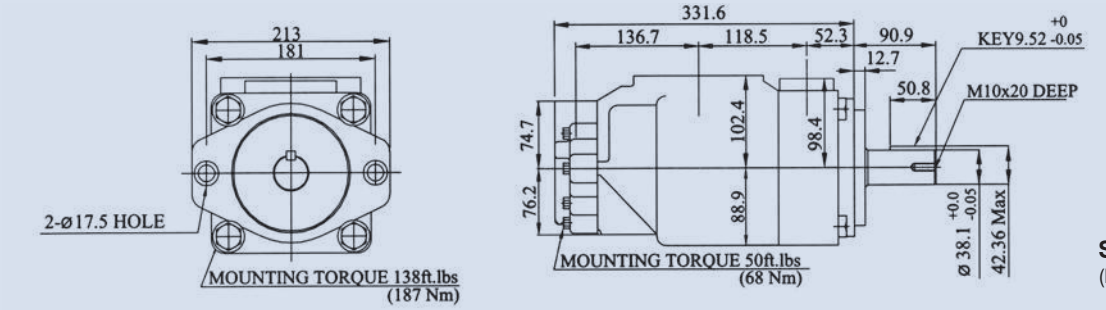

Shaft Code 1
(Keyed SAE CC)

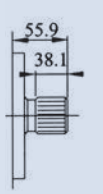

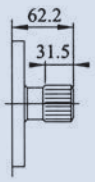

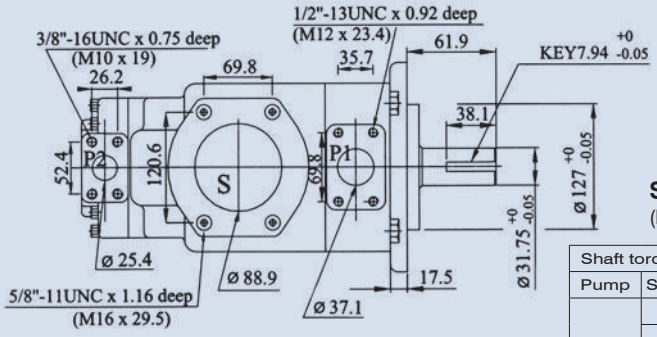

Shaft Code 2
(Keyed no SAE)

Shaft Code 3
SAE C Splined shaft calss 1 – J498 b 12/24 d.p. -14 teeth 30° pressure angle flat root side fit.

Shaft Code 4
SAE CC Splined shaft class 1 – J498 b 12/24 d.p. -17 teeth 30° pressure angle flat root side fit.

Shaft torque limits (cc/rev x bar)		
Pump	Shaft	Vp x P max. P1+P2
KT6EC	1	72306
	2	34590
	3	61200
	4	76376

KT6ED

Unit:mm

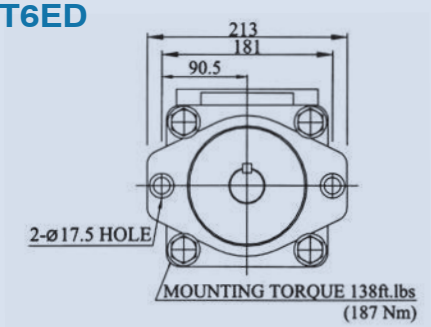

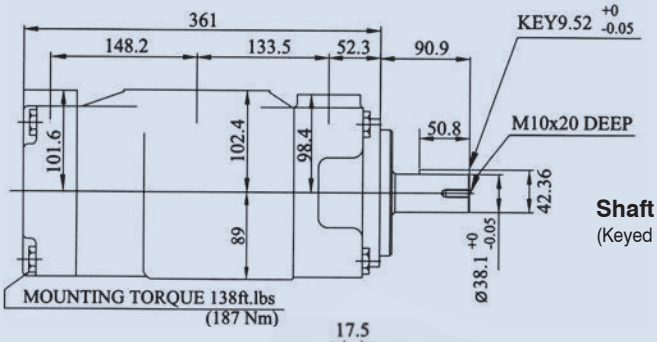

Shaft Code 1
(Keyed SAE CC)

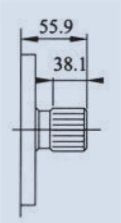

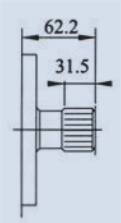

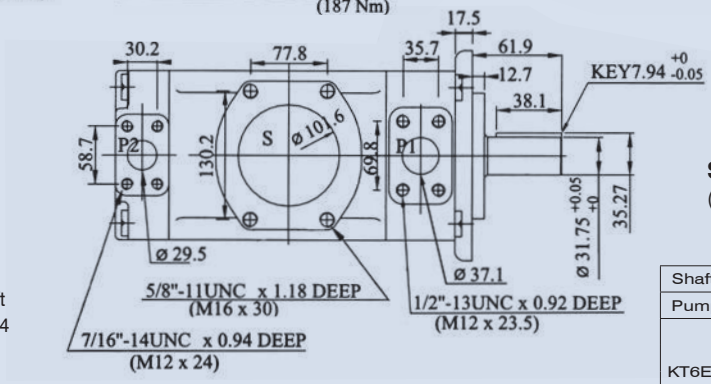

Shaft Code 2
(Keyed no SAE)

Shaft Code 3
SAE C Splined shaft calss 1 – J498 b 12/24 d.p. -14 teeth 30° pressure angle flat root side fit.

Shaft Code 4
SAE CC Splined shaft class 1 – J498 b 12/24 d.p. -17 teeth 30° pressure angle flat root side fit.

Shaft torque limits (cc/rev x bar)		
Pump	Shaft	Vp x P max. P1+P2
KT6ED	1	72306
	2	34590
	3	61200
	4	76376

DOUBLE LIPS AND PISTON TYPE DOUBLE VANE PUMP

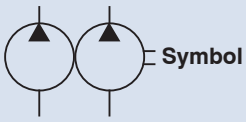

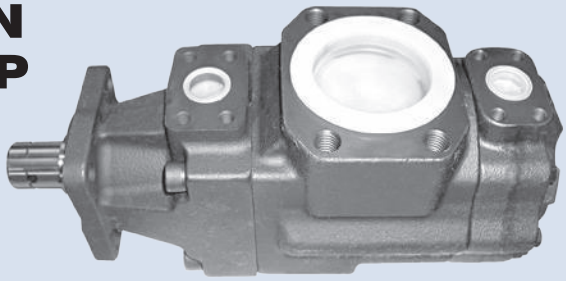

How to order

KT6GCC - 022 - 008 - 6 - R - 00 - A 1 - 00 - ※

1 — 2 (P1 / P2) — 3 — 4 — 5 — 6 — 7 — 8 — 9

1	Model	KT6GCC (KT6GC+KT6GC) The large cartridge must be always mounted in the front.
2	Cam ring P1 & P2	
3	Shaft type	6: splined (DIN 5462)
4	Shaft rotation (viewed from shaft end)	R: Clockwise L: Counter-clockwise
5	Porting combination	00: Normal
6	Design letter	
7	Seal class	1: S1 (for mineral oil)
8	Port size	

		P1=1",S=3"		P1=1",S=2 1/2" 2)	
P2		1"	3/4" 1)	1"	3/4" 1)
Code	UNC	00	01	10	11
	Metric	0M	M0	1M	M1

1)for 46cc/rev.max.
2)for 126cc/rev.max.

9	Modifications	weight: 28 kgs

Port combinations

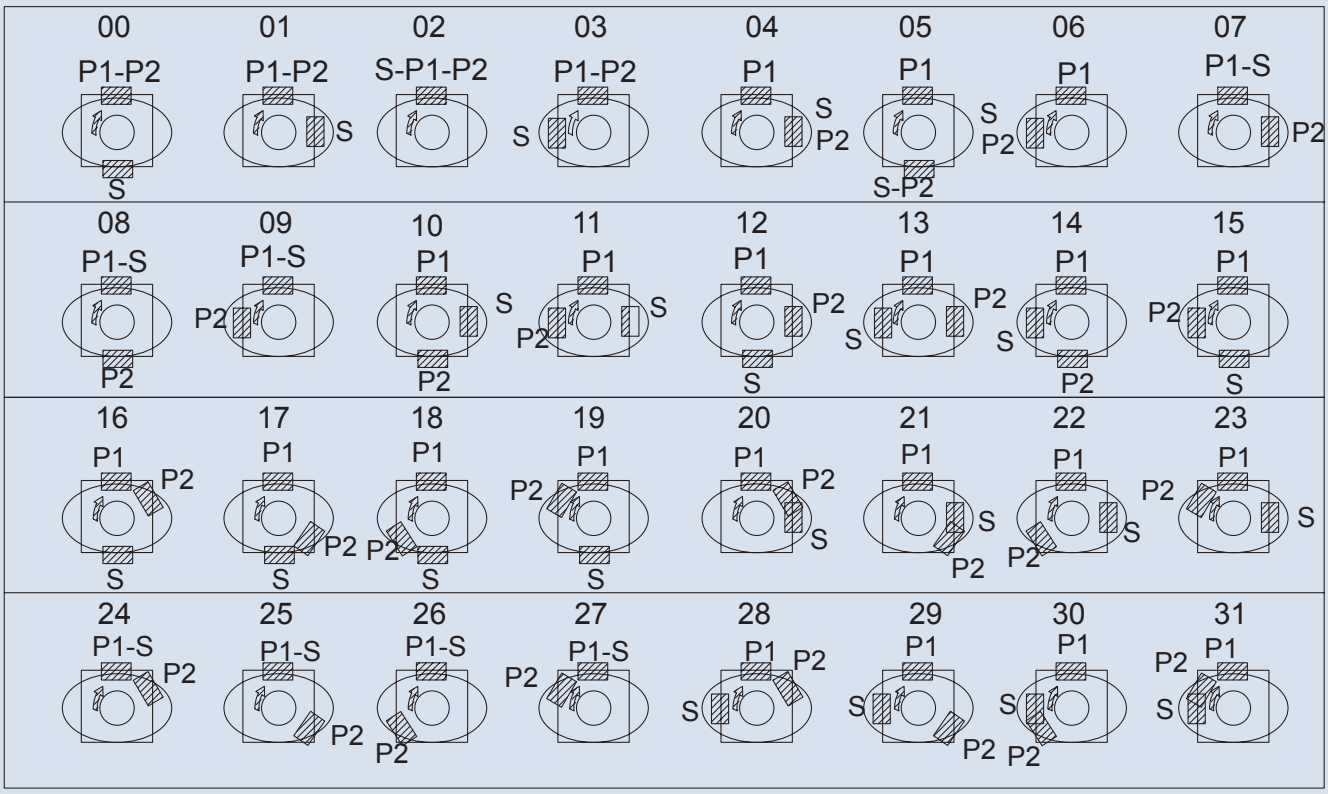

DOUBLE LIPS AND PISTON TYPE DOUBLE VANE PUMP

C

Specifications

Model	Pressure Port	Series	Displacement (cc/rev)	Delivery (lpm) At 1500 rpm			Input Power (kw) At 1500 rpm			Max. Pressure (bar)	Runing Speed (rpm)	
				p=0 bar	p=140 bar	p=240 bar	p=7 bar	p=140 bar	p=240 bar		Max.	Min.
KT6GCC	P1 & P2	003	10.8	16.2	10.7		1.3	5.3		300	3000	600
		005	17.2	25.8	20.3	15.8	1.4	7.5	12.2			
		006	21.3	31.9	26.5	22.0	1.5	8.9	14.7			
		008	26.4	39.6	34.1	29.6	1.6	10.7	17.7			
		010	34.1	51.1	45.7	41.2	1.7	13.4	22.3			
		012	37.1	55.6	50.2	45.7	1.7	14.4	24.1			
		014	46.0	69.0	63.5	59.0	1.9	17.6	29.5			
		017	58.3	87.4	82.0	77.5	2.1	21.9	36.9			
		020	63.8	95.7	90.2	85.7	2.2	23.8	40.2			
		022	70.3	105.4	100.0	95.5	2.3	26.1	44.1			
		025	79.3	118.9	113.5	109.0	2.5	29.2	49.5		2800	
		028	88.8	133.2	127.7	124.5 2)	2.8	32.7	48.5	230		
		031	100.0	150.0	144.5	141.3 2)	2.8	36.5	54.2			

Not to use because intenal leakage greater than 50% theoretical flow.

Dimensions

Unit:mm

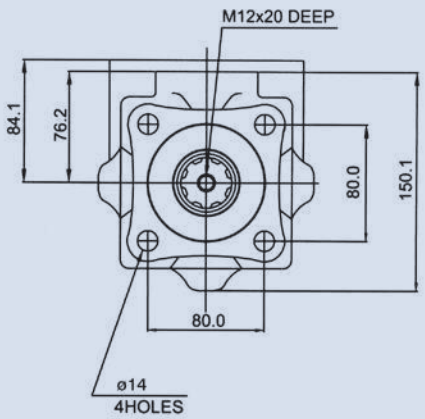

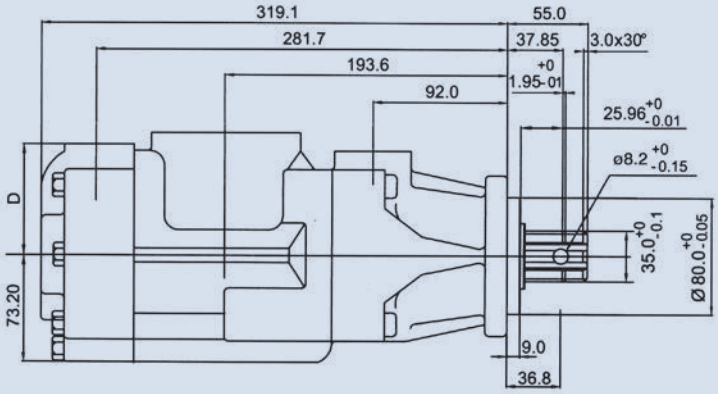

Shaft Code 6
DIN5462B8 x 32 x 36

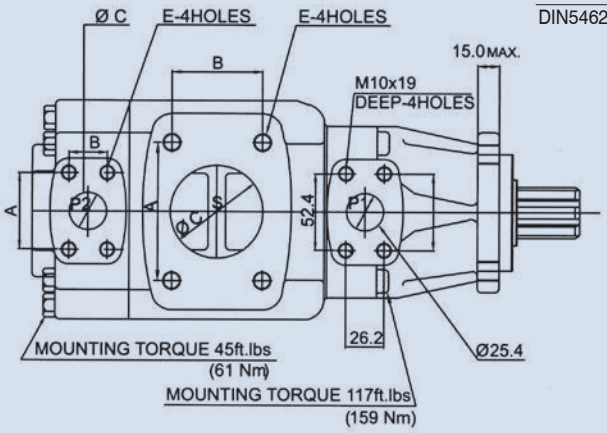

Port	A	B	C	D	E
S (3")	106.4	61.9	76.2		5/8-11UNC X 1.12 (M16 X 28.4 deep)
S (2 1/2")	88.9	50.8	63.5		1/2-13 UNC X 0.94 (M12 X 24 deep)
P2 (3/4")	47.7	22.2	19.0	76.2	3/8-16UNC X 0.75 (M10 X 19.0 deep)
P2 (1")	52.4	26.2	25.4	74.7	

Shaft torque limits (cc/rev x bar)	
Shaft	Vp x P max.(P1+P2)
6	32670

DOUBLE LIPS AND PISTON TYPE TRIPLE VANE PUMP

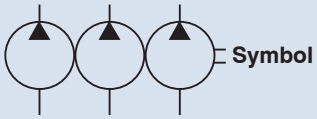

How to order

KT6DCC - 038 - 022 - 008 - 1 - R - 00 - A 1 - 00 - ※

1 — P1 P2 P3 (2) — 3 — 4 — 5 — 6 7 — 8 — 9

1	Model	KT6DCC (KT6D+KT6C+KT6C)
2	Cam ring P1 P2 P3	
3	Shaft type	
4	Shaft rotation	R: Clockwise L: Counter-clockwise
5	Porting combination	00: Normal
6	Design letter	
7	Seal class	1: S1 (for mineral oil) 4: S4 (for fire resistant fluids) 5: S5 (for mineral oil and fire resistant fluids)
8	Port size	

	UNC		Metic	
	00	01	M0	M1
P3	1"	3/4"	1"	3/4"

9	Modifications	weight: 65 kgs

Port combinations

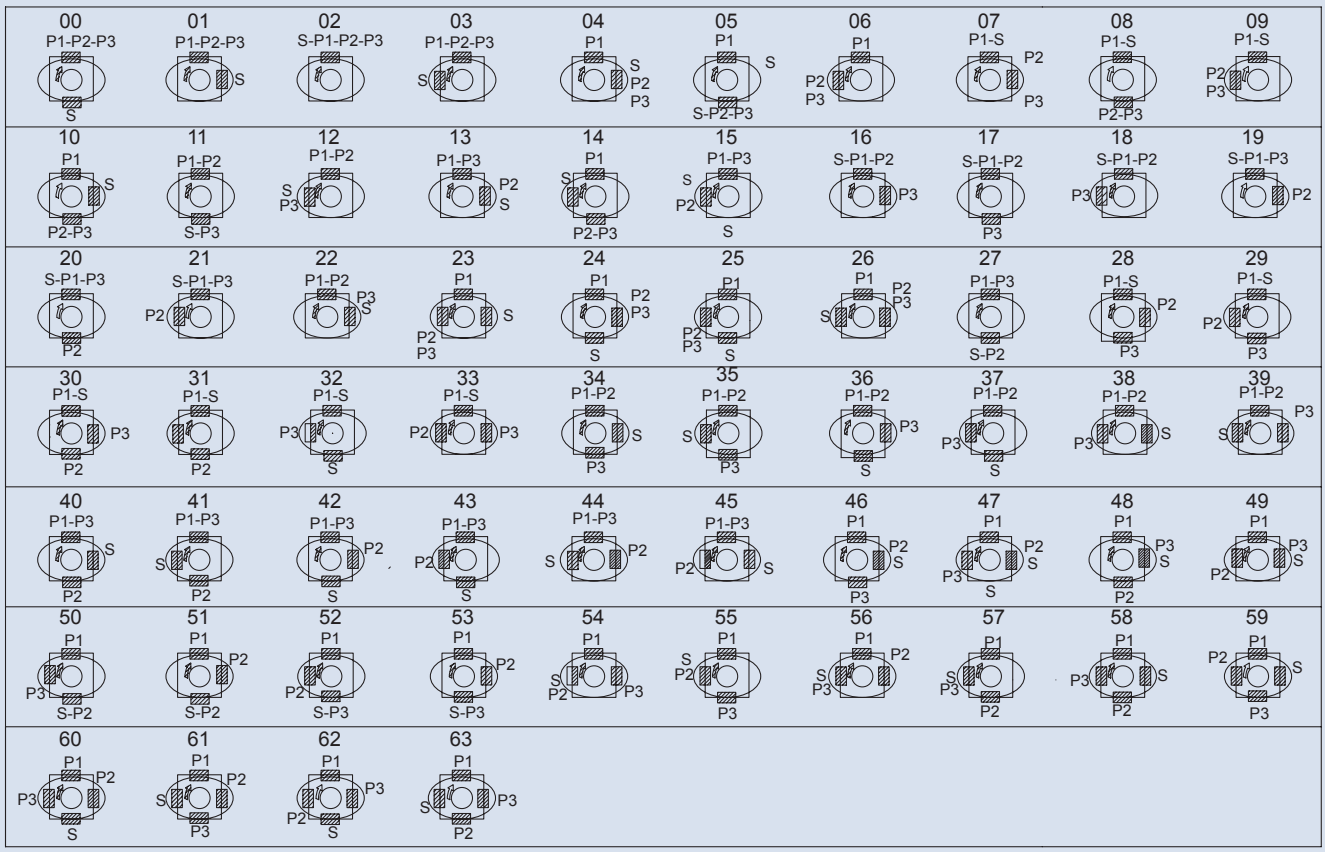

DOUBLE LIPS AND PISTON TYPE TRIPLE VANE PUMP

C

Specifications

Model	Pressure Port	Cam Ring	Displacement (cc/rev)	Delivery (lpm) At 1500 rpm			Input Power (kw) At 1500 rpm			Max. Pressure (bar)	Runing Speed (rpm)	
				p=0 bar	p=140 bar	p=240 bar	p=7 bar	p=140 bar	p=240 bar		Max.	Min.
KT6DCC	P1	014	47.6	71.4	62.1	55.9	2.3	18.5	30.6	300	2800	600
		017	58.2	87.3	78.0	71.8	2.5	22.2	37.0			
		020	66.0	99.0	89.7	83.5	2.8	24.9	41.7			
		024	79.5	119.3	110.0	103.8	3.0	29.6	49.8			
		028	89.7	134.5	125.2	119.0	3.2	33.2	55.9			
		031	98.3	147.5	138.1	131.9	3.3	36.2	61.0			
		035	111.0	166.5	157.2	151.0	3.5	40.7	68.7			
		038	120.3	180.4	171.1	164.9	3.7	43.9	74.3			
		042 1)	136.0	204.0	194.7	188.5	4.0	49.4	83.7			
		045 1)	145.7	218.5	209.2	203.0	4.1	52.8	89.5			
		050 1)	158.0	237.0	227.7	224.0 2)	4.4	57.0	85.0 2)			
	P2 - P3	003	10.8	16.2	10.7		1.3	5.3				
		005	17.2	25.8	20.3	15.8	1.4	7.5	12.2			
		006	21.3	31.9	26.5	22.0	1.5	8.9	14.7			
		008	26.4	39.6	34.1	29.6	1.6	10.7	17.7			
		010	34.1	51.1	45.7	41.2	1.7	13.4	22.3			
		012	37.1	55.6	50.2	45.7	1.7	14.4	24.1			
		014	46.0	69.0	63.5	59.0	1.9	17.6	29.5			
		017	58.3	87.4	82.0	77.5	2.1	21.9	36.9			
		020	63.8	95.7	90.2	85.7	2.2	23.8	40.2			
		022	70.3	105.4	100.0	95.5	2.3	26.1	44.1			
		025	79.3	118.9	113.5	109.0	2.5	29.2	49.5			
		028	88.8	133.2	127.7	124.5 3)	2.8	32.7	48.5 3)			
		031	100.0	150.0	144.5	141.3 3)	2.8	36.5	54.2 3)			

1) 042-045-050=2500 rpm max. 2) 050=230 bar max. int. 3)028-031=230 bar max. int.

Dimensions

Unit:mm

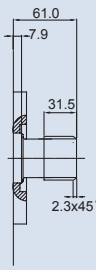

NO.4 Shaft
SAE CC splined shaft
Class I-J498 b 12/24 d.p.
-17 teeth 30°
pressure angle flat root
side fit

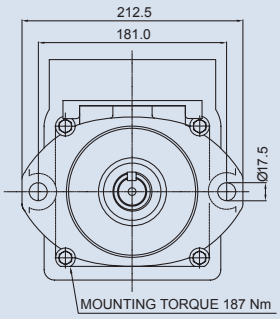

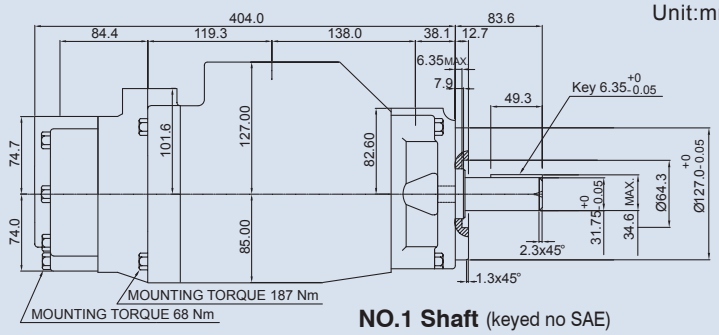

NO.1 Shaft (keyed no SAE)

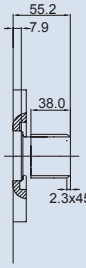

NO.3 Shaft
SAE C splined shaft
Class 1-J498 b
12/24 d.p.-14 teeth 30°
pressure angle
flat root side fit

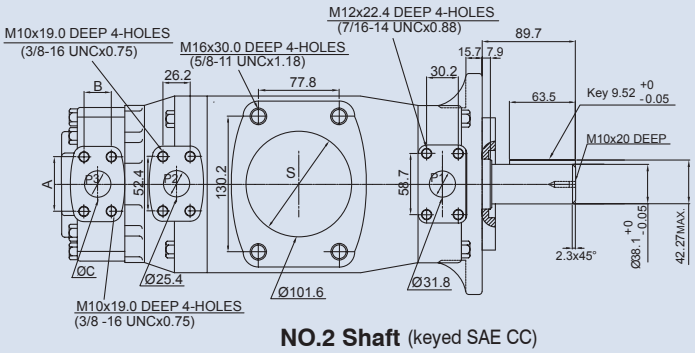

NO.2 Shaft (keyed SAE CC)

Shaft torque limits (cc/rev x bar)	
Shaft	Vp x p max.(P1+P2+P3)
1	43240
2	66500
3	61200
4	66500

PORT	CODE	A	B	C
P3	00 & M0	52.4	26.2	25.4
	01 & M1	47.6	22.2	19.0

4ManPro
Elements For Manufacturing Processes

HI HYDROME

BOMBAS HIDRAULICAS DE PALETAS DE DESPLAZAMIENTO VARIABLE (VARIABLE DISPLACEMENT VANE PUMP)

VARIABLE DISPLACEMENT VANE PUMP

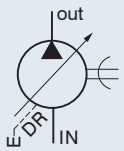

Symbol

VP-F8, 12, 15, 20

A

How to order

VP - F 15 - A ※ - ※

1 2 3 4 5 6

1	Variable pump
2	F: Flange mounting type
3	Nominal No-Load displacement
4	A: Sharp cut-off type
5	Pressure adjusting range
6	Shaft diameter: None: 12.7 (standard) B: 15.88

Specifications

Model	No-Load Displacement lpm At 1800 rpm	Pressure Adj. Range (bar)	Rated Speed (rpm)		Max. Pressure (bar)	Weight (kg)
			Max.	Min.		
VP-F8	8	1: 3-20	1800	800	70	4.8
VP-F12	12	2: 15-55				4.8
VP-F15	15	3: 30-70				5.2
VP-F20	20					5.2

Dimensions

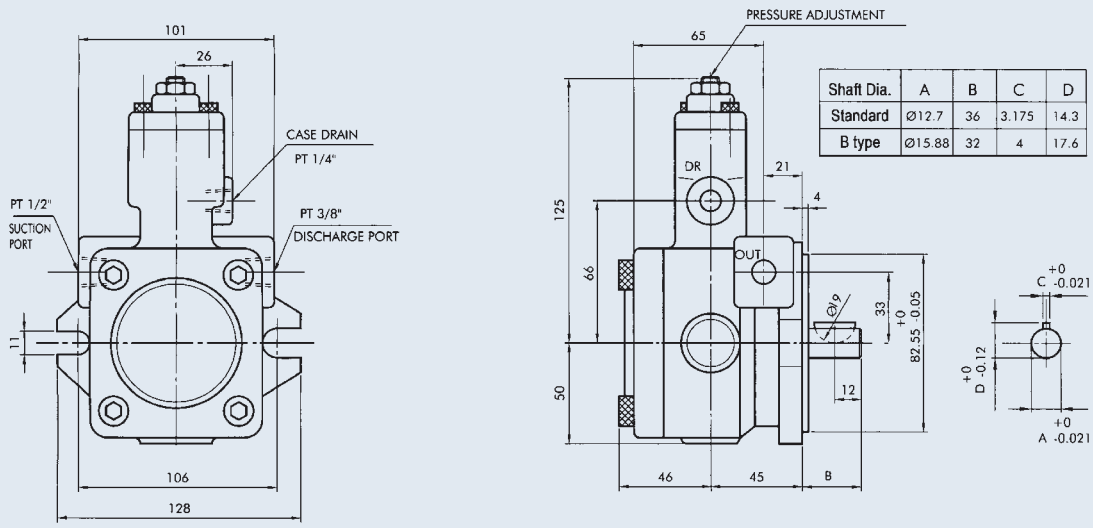

Shaft Dia.	A	B	C	D
Standard	Ø12.7	36	3.175	14.3
B type	Ø15.88	32	4	17.6

VARIABLE DISPLACEMENT VANE PUMP

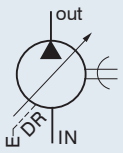

Symbol

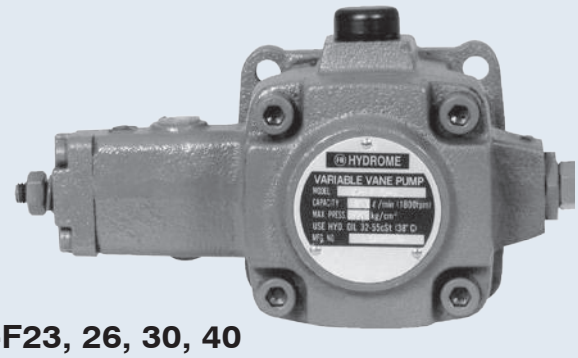

VP-F23, 26, 30, 40

A

How to order

VP - F 30 - A ※

1 2 3 4 5

1	Variable pump
2	F: Flange mounting type
3	Nominal no-load displacement
4	A: Sharp cut-off type
5	Pressure adjusting range

Specifications

Model	No-Load Displacement lpm At 1800 rpm	Pressure Adj. Range (bar)	Rated Speed (rpm)		Max. Pressure (bar)	Weight (kg)
			Max.	Min.		
VP-F23	23	1: 3-20	1800	800	70	9
VP-F26	26	2: 15-55				9
VP-F30	30	3: 30-70				9
VP-F40	40					9

Dimensions

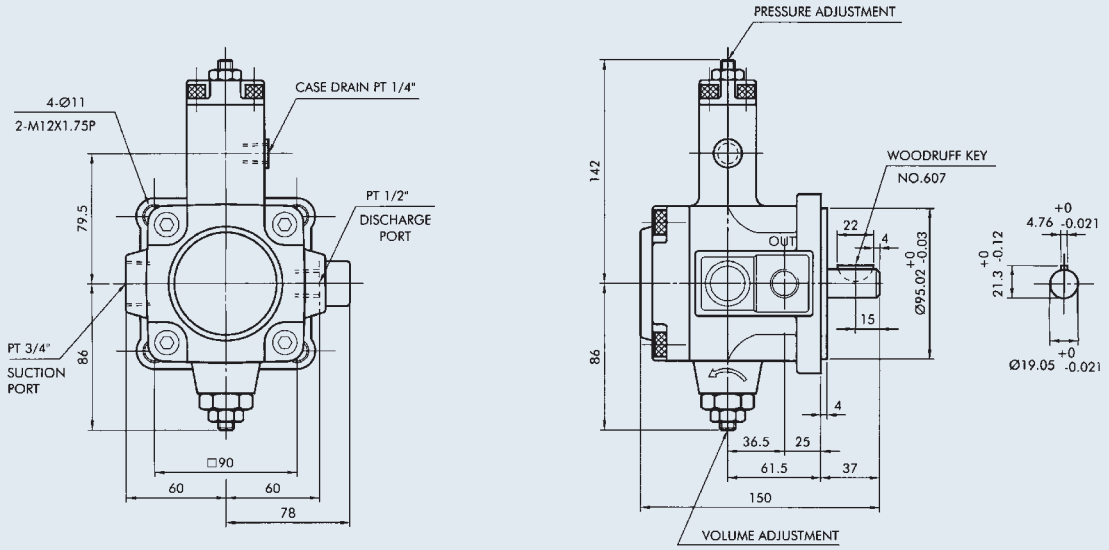

VARIABLE DISPLACEMENT VANE PUMP

A

Performance curves

VP-F8

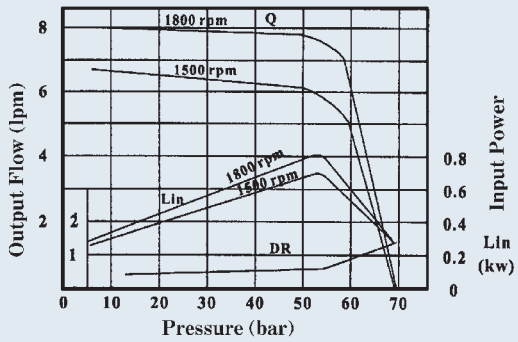

VP-F12

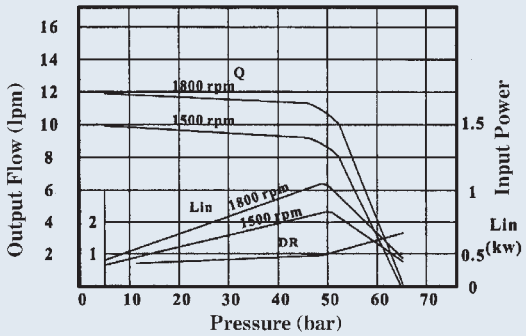

VP-F15

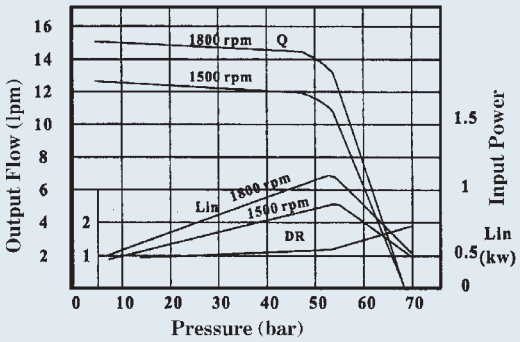

VP-F20

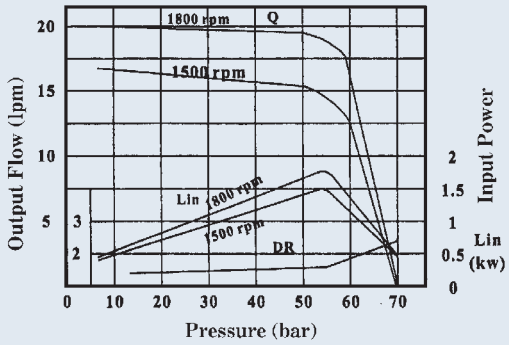

VP-F26

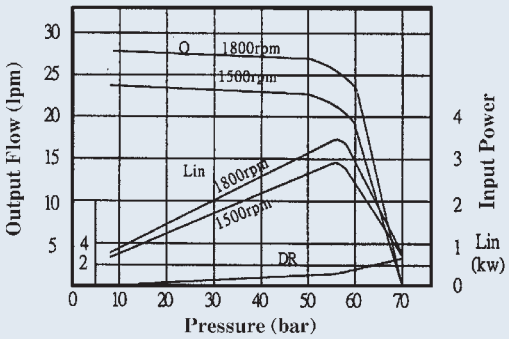

VP-F30

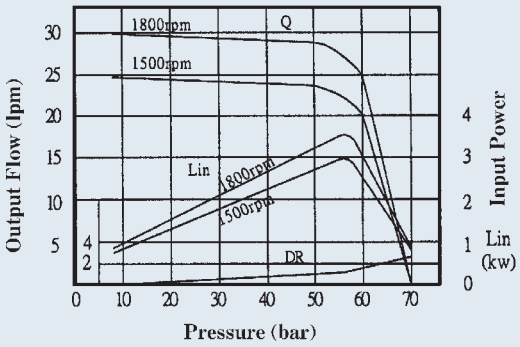

VP-F40

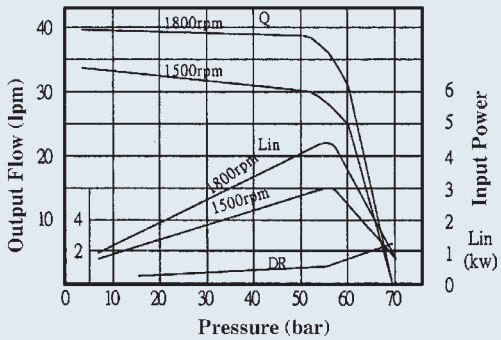

VARIABLE DISPLACEMENT VANE PUMP

A

VP-F8, 12, 15, 20 cross section drawing

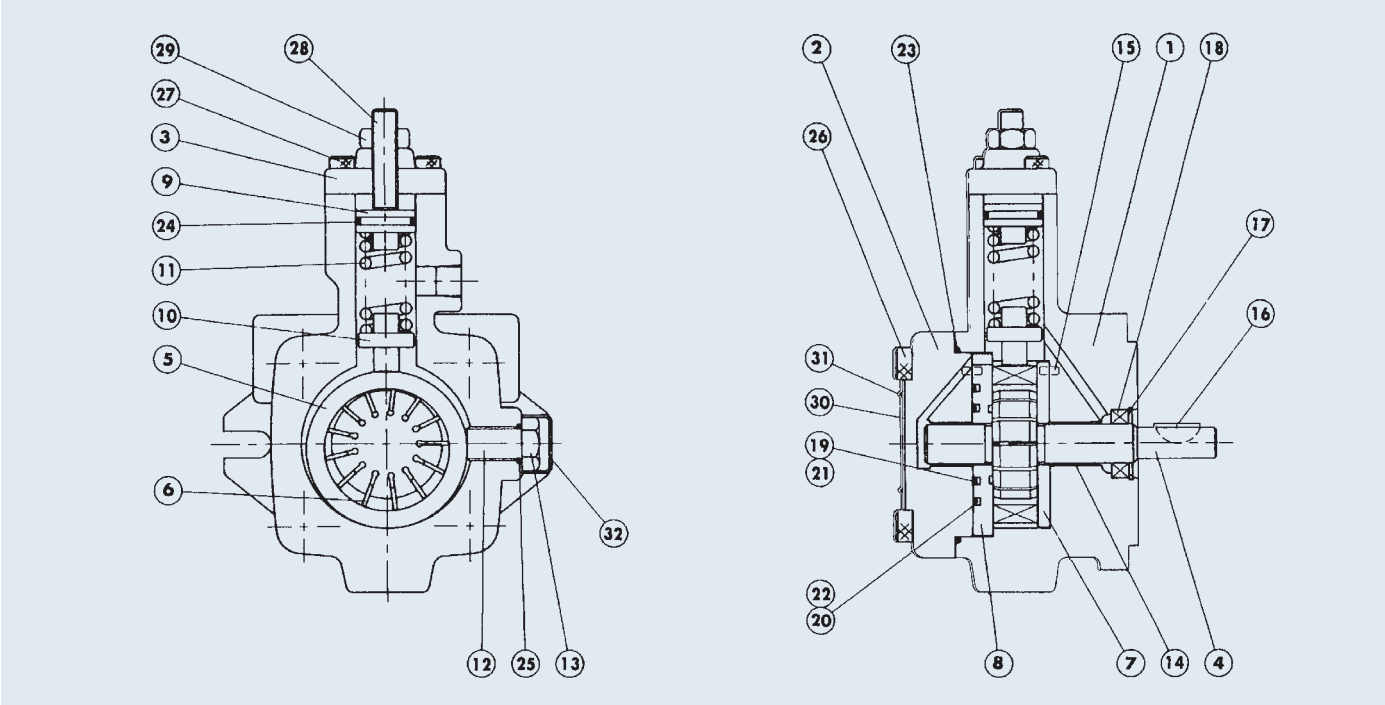

Parts list

Item No.	Description	Q'ty	Specification
1	Pump Body	1	
2	Back Cover	1	
3	Cover	1	
4	Shaft	1	
5	Cam Ring	1	
6	Vanes	13	
7	Port Plate	1	
8	Thrust Plate	1	
9	Spring Retainer	1	
10	Piston	1	
11	Spring	1	
12	Slide Screw	1	
13	Hex Nut	1	
14	Engine Bush	2	DD 1615
15	Pin	5	ø3×8
16	Woodruff Key	1	No. 405

Item No.	Description	Q'ty	Specification
17	Retainer Ring	1	R28
18	Shaft Seal	1	TC.V 16287
19	Endless Back-up ring	1	
20	Endless Back-up ring	1	
21	O-Ring	1	AS 568-023
22	O-Ring	1	AS 568-031
23	O-Ring	1	1A-S75
24	O-Ring	1	1A-P20
25	O-Ring	1	1A-P12
26	Socket Head Cap Screws	4	M8×25×P1.25
27	Socket Head Cap Screws	2	M6×20×P1.0
28	Socket Set Screws	1	M10×35×P1.5
29	Hex Nut	1	M10×P1.5
30	Name Plate	1	1
31	Fixing Screw	3	3
32	Cap	1	1

VARIABLE DISPLACEMENT VANE PUMP

A

VP-F23, 26, 30, 40 cross section drawing

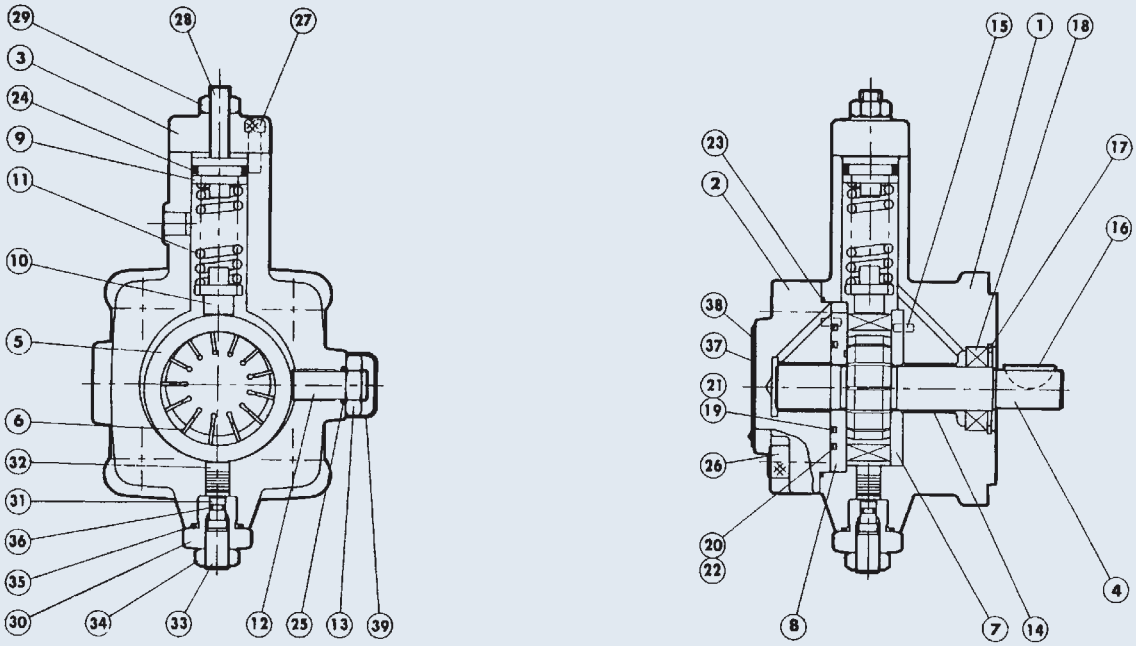

Parts list

Item No.	Description	Q'ty	Specification
1	Pump Body	1	
2	Back Cover	1	
3	Cover	1	
4	Shaft	1	
5	Cam Ring	1	
6	Vanes	13	
7	Port Plate	1	
8	Thrust Plate	1	
9	Spring Retainer	1	
10	Piston	1	
11	Spring	1	
12	Slide Screw	1	
13	Hex Nut	1	M16×P1.0
14	Engine Bush	2	DD 2225
15	Pin	5	4×10
16	Woodruff Key	1	No. 607
17	Retainer Ring	1	R42
18	Shaft Seal	1	TCV 224211
19	Endless Back-up ring	1	
20	Endless Back-up ring	1	

Item No.	Description	Q'ty	Specification
21	O-Ring	1	AS 568-030
22	O-Ring	1	AS 568-035
23	O-Ring	1	1A-S85
24	O-Ring	1	1A-P22A
25	O-Ring	1	1A-P14
26	Socket Head Cap Screws	4	M10×25×P1.5
27	Socket Head Cap Screws	2	M6×20×P1.0
28	Socket Set Screws	1	M10×40×P1.5
29	Hex Nut	1	M10×P1.5
30	Thrust Screw	1	
31	Piston	1	
32	Piston	1	
33	Socket Set Screw	1	M12×24×P1.75
34	Hex Nut	1	M12×P1.75
35	O-Ring	1	1A-P20
36	O-Ring	1	1A-P5
37	Name Plate	1	
38	Fixing Screw	3	
39	Cap	1	
40			

VARIABLE DISPLACEMENT DOUBLE VANE PUMP

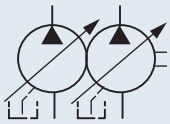

Symbol

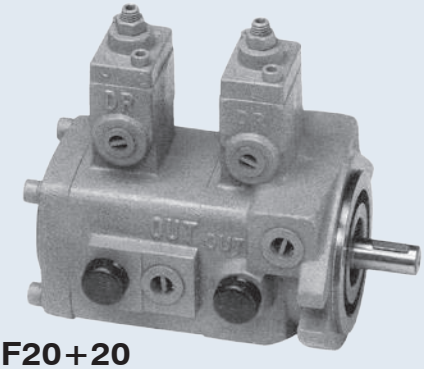

DVP-F12+12 ,F15+15 ,F20+20

A

How to order

DVP - F 1515 - A 1A1

1 2 3 4 5

1	Variable double vane pump: weight: 9.5 kgs
2	Flange mounting type
3	Displacement
4	Sharp cut-off type
5	Pressure adjusting range 1: 3-20 bar 2: 15-55 bar 3: 30-70 bar (As general rule low pressure pump is placed at the cover side and high pressure pump at the shaft side).

Dimensions

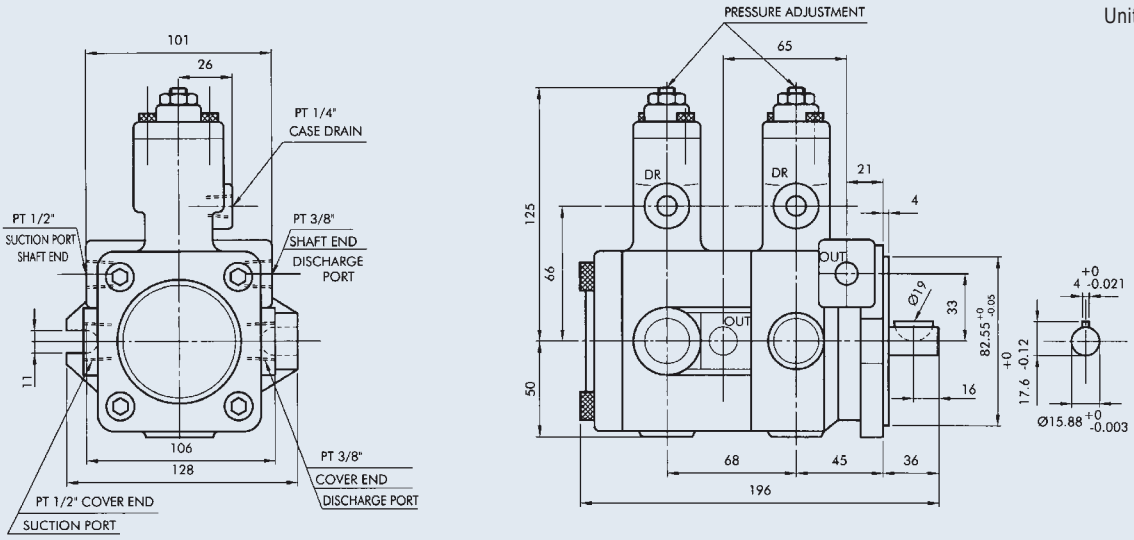

VARIABLE DISPLACEMENT DOUBLE VANE PUMP

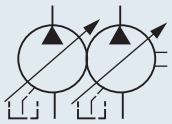

Symbol

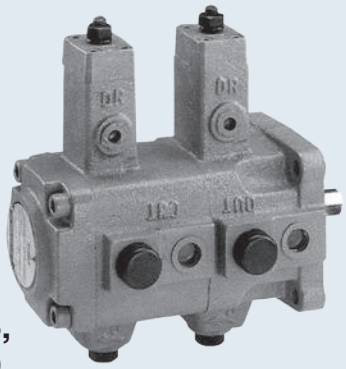

DVP-F23+23, F26+26, F30+30, F40+40

A

How to order

DVP - F 3030 - A 1A1

1 2 3 4 5

1	Variable double vane pump: weight: 16 kgs
2	Flange mounting type
3	Displacement
4	Sharp cut-off type
5	Pressure adjusting range 1: 3-20 bar 2: 15-55 bar 3: 30-70 bar (As general rule low pressure pump is placed at the cover side and high pressure pump at the shaft side).

Dimensions

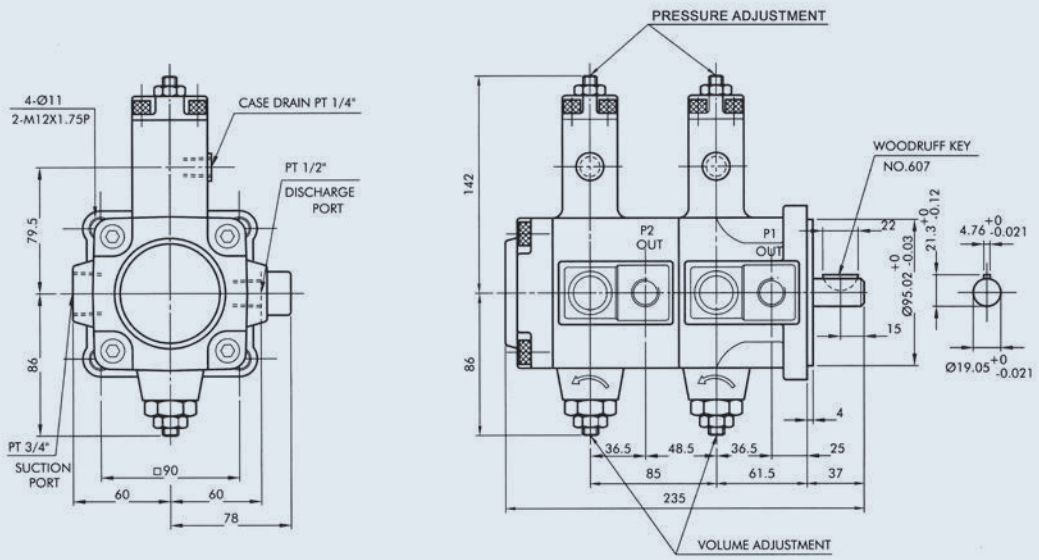

VARIABLE DISPLACEMENT VANE PUMP+GEAR PUMP

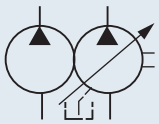

Symbol

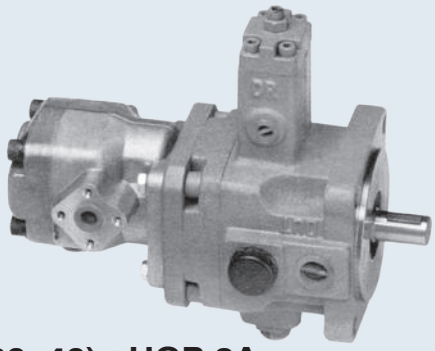

VPG-F23 (26, 30, 40)+HGP-2A

A

How to order

VPG - F 30/3 - A 3
1 2 3 4 5 6

1	Variable vane pump+gear pump
2	Flange mounting type
3	Low pressure vane pump displacement: 23: 23 lpm (6 GPM) Weight: 10 kg 26: 26 lpm (6.8 GPM) Weight: 10 kg 30: 30 lpm (8 GPM) Weight: 10 kg 40: 40 lpm (10.5 GPM) Weight: 10 kg
4	Gear pump displacement: 3: 3 cc/rev (see page 129)
5	Sharp cut-off type
6	Pressure adjusting range 1: 3-20 bar 2: 15-55 bar 3: 30-70 bar

Dimensions

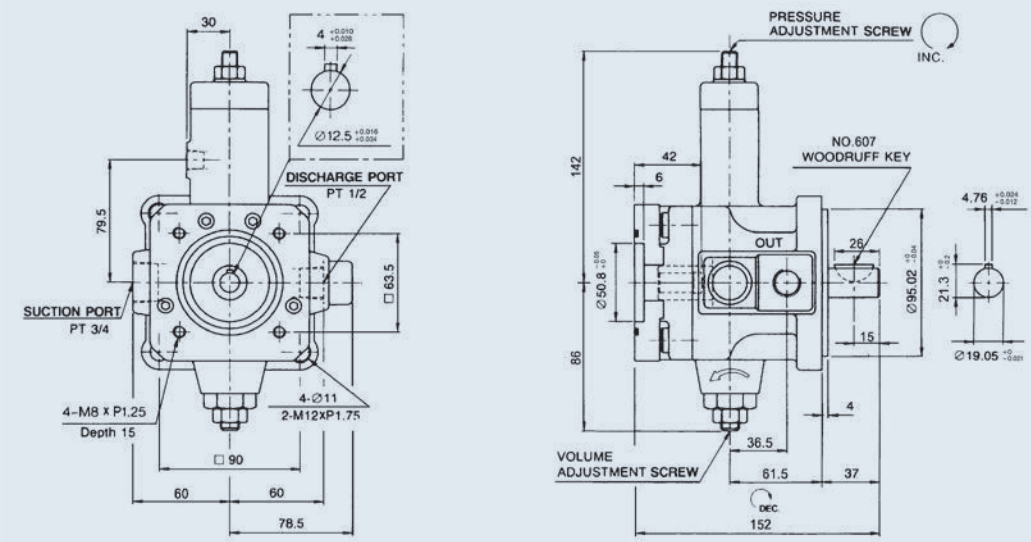

HIGH PRESSURE VARIABLE DISPLACEMENT VANE PUMP

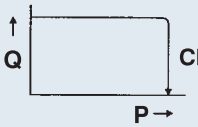

Characteristics

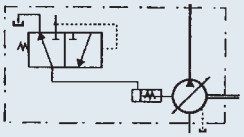

Symbol

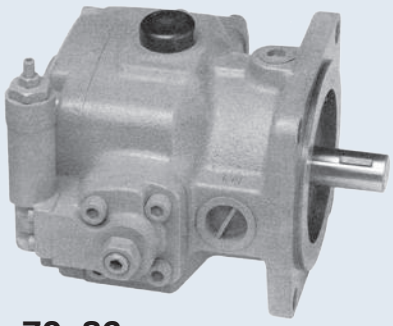

VP5-F20, 25, 30, 40, 54, 70, 86

A

How to order

VP5 - F 30 - A 5
1 2 3 4 5

1	High pressure variable displacemnet single vane pump
2	Flange mounting type
3	Displacement
4	A: Sharp cut-off type
5	Pressure adjusting range 2: 15-35 bar 3: 20-70 bar 4: 50-105 bar 5: 70-140 bar

Specifications

Model	No-Load Displacement lpm At 1800 rpm	Pressure Adj. Range (bar)	Rated Speed (rpm)		Max. Pressure (bar)	Weight (kg)
			Max.	Min.		
VP5-F20	20	2: 15~35 3: 20~70 4: 50~105 5: 70~140	1800	800	140	9.5
VP5-F25	25					9.5
VP5-F30	30					9.5
VP5-F40	40					9.5
VP5-F54	54					25
VP5-F70	70					25
VP5-F86	86					25

FEATURES:

1. High efficiency and high stability even on high pressure operation.
2. Vibration free with low noise level.
3. Sensitive responses and actions to on-off and changing loads.
4. Constant output on high pressure operation.
5. High operational efficiency with hores power saving.
6. Easier control on the adjustment of the pressure and oil flow.

A

Dimensions

Unit:mm

VP5-F20, 25, 30, 40

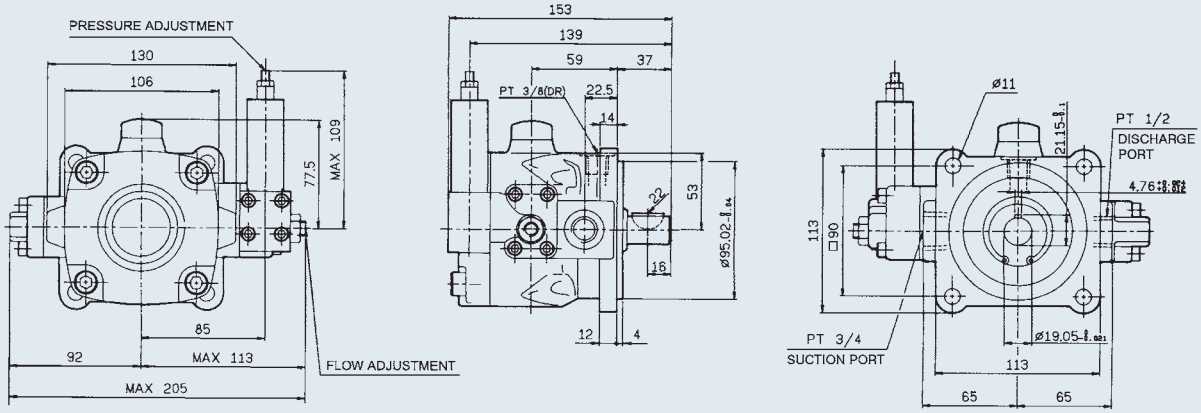

VP5-F54, 70, 86

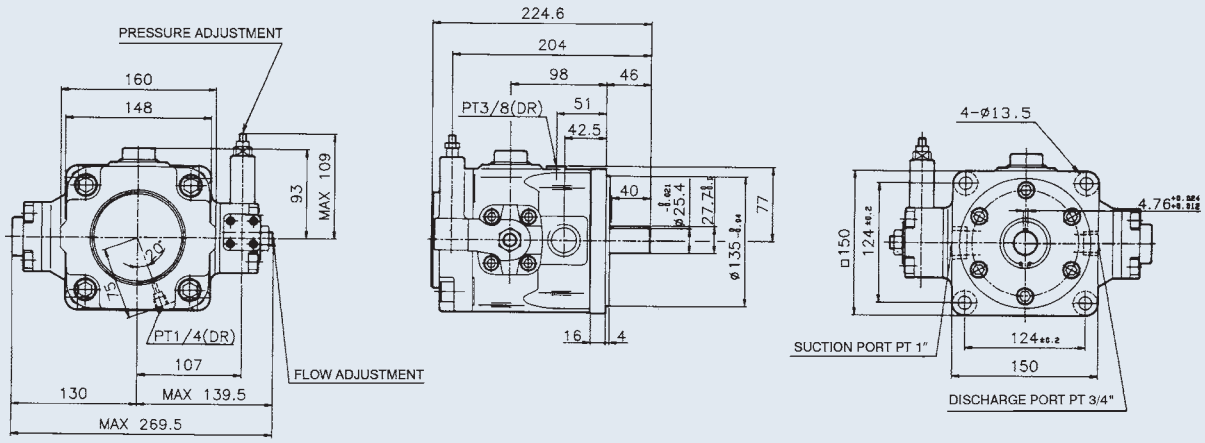

HIGH PRESSURE VARIABLE DISPLACEMENT VANE PUMP

Performance curves

A

VP5-F20

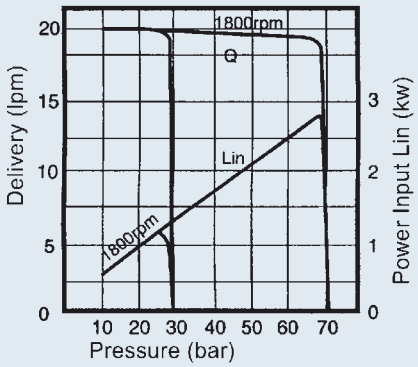

VP5-F40

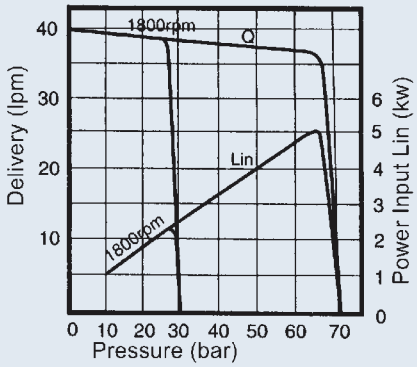

VP5-F25

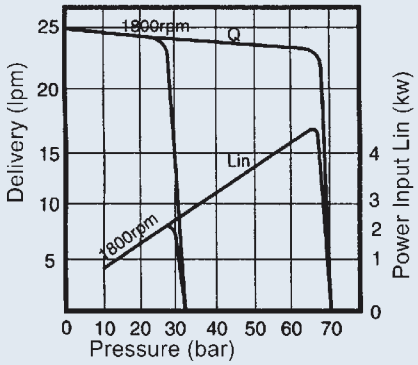

VP5-F54

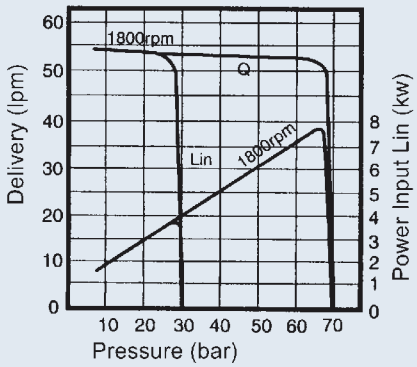

VP5-F30

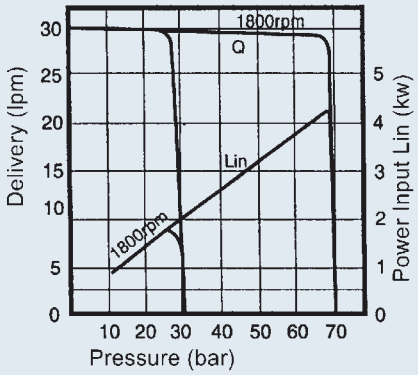

VP5-F70

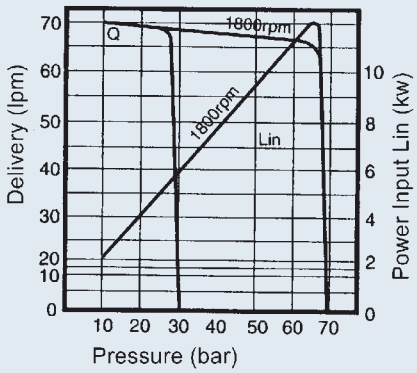

HIGH PRESSURE VARIABLE DISPLACEMENT VANE PUMP

VP5-F20, 25, 30, 40, 54, 70, 86 decomposition chart

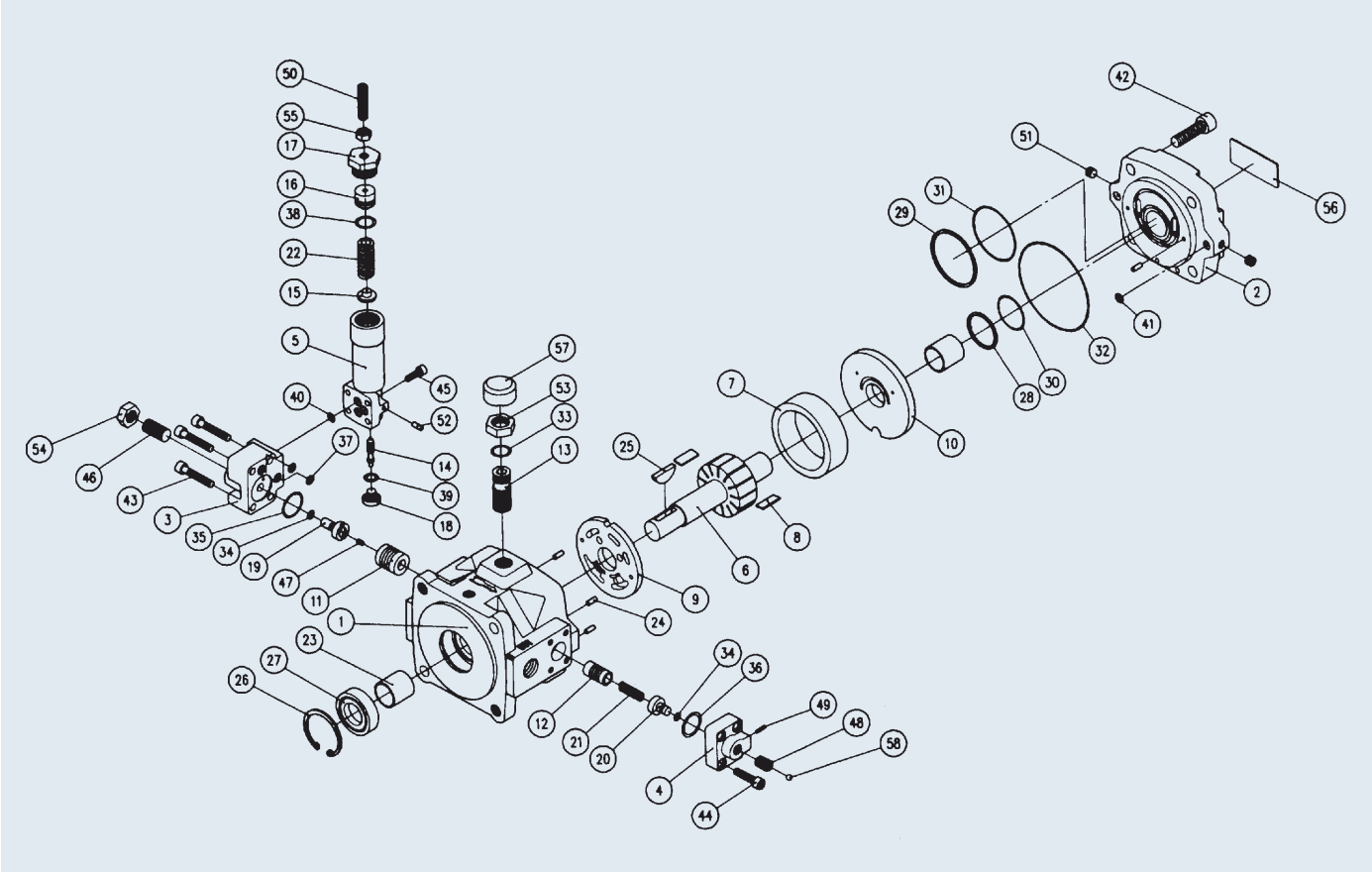

Parts list

Item No.	Description	Item No.	Description	Item No.	Description	Item No.	Description
1	Pump Body	16	Spring Retainer	31	O-Ring	46	Socket Set Screw
2	Back Cover	17	Screw	32	O-Ring	47	Socket Set Screw
3	Cover	18	plug	33	O-Ring	48	Socket Set Screw
4	Side Cover	19	Piston	34	O-Ring	49	Socket Set Screw
5	Body	20	Piston	35	O-Ring	50	Socket Set Screw
6	Shaft	21	Spring	36	O-Ring	51	Plug
7	Cam Ring	22	Spring	37	O-Ring	52	Plug
8	Vanes	23	Engine Bush	38	O-Ring	53	Hex Nut
9	Port Plate	24	Pin	39	O-Ring	54	Hex Nut
10	Thrust Plate	25	Woodruff Key	40	O-Ring	55	Hex Nut
11	Piston	26	Retainer Ring	41	O-Ring	56	Nameplate
12	Piston	27	Shaft Seal	42	Socket Head Cap Screw	57	Cap
13	Slide Screw	28	Endless Back-up ring	43	Socket Head Cap Screw	58	Plug
14	Spool	29	Endless Back-up ring	44	Socket Head Cap Screw	59	
15	Holder	30	O-Ring	45	Socket Head Cap Screw	60	

HIGH PRESSURE VARIABLE DISPLACEMENT DOUBLE VANE PUMP

A

How to order

VP5 - F - 1-2 - 30 - 70 - A - 2 - A - 2

1 2 3 4 5 6 7 8 9

1	Model
2	Flange mounting type
3	Series number 1: 20, 25, 30, 40 lpm 2: 54, 70, 86 lpm
4	Cover side pump delivery lpm
5	Shaft end pump delivery lpm
6	Cover side pump control type A: Sharp cut-off type
7	Cover side pump pressure adjusting range 2: 15-35 bar 3: 20-70 bar 4: 50-105 bar 5: 70-140 bar
8	Shaft end pump control type A: Sharp cut-off type
9	Shaft end pump pressure adjusting range 2: 15-35 bar 3: 20-70 bar 4: 50-105 bar 5: 70-140 bar

Dimensions

Unit:mm

VP5-F-11

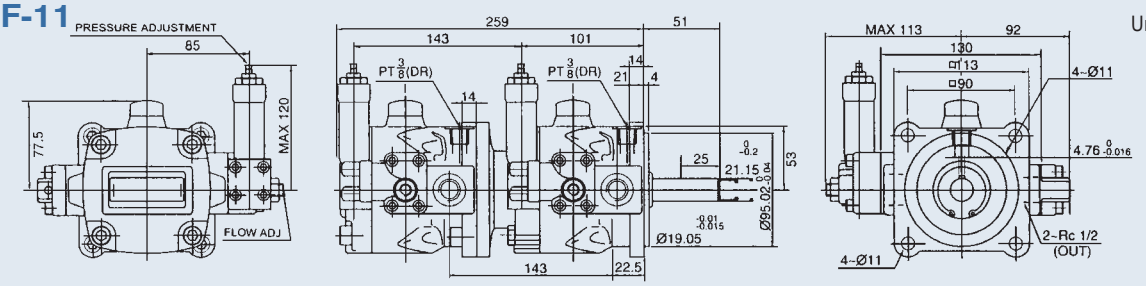

VP5-F-12

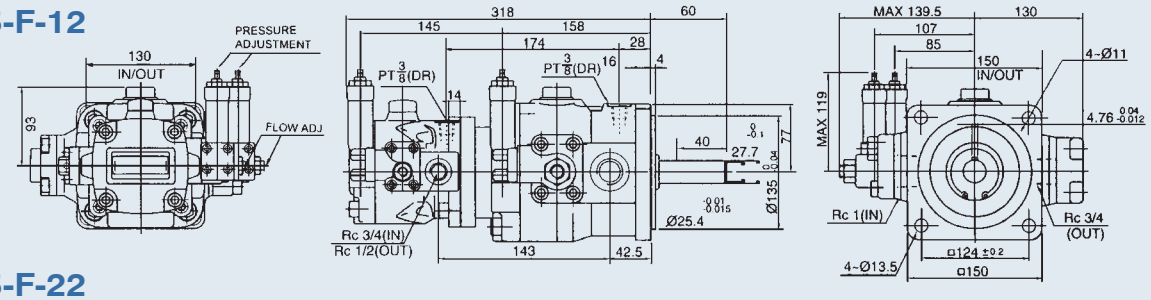

VP5-F-22

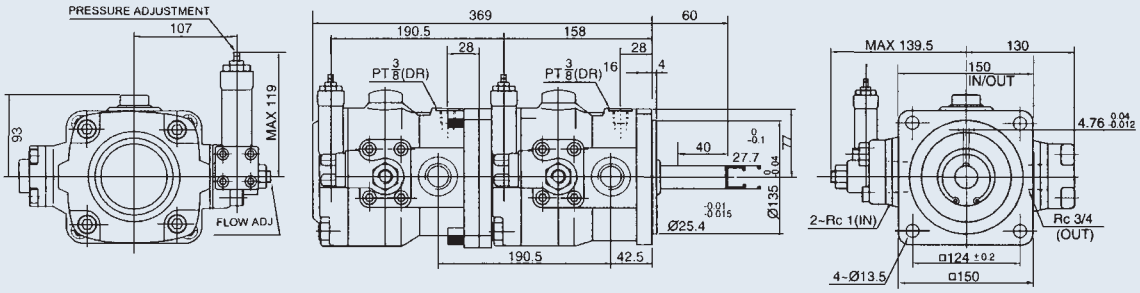

4ManPro

Elements For Manufacturing Processes

HI HYDROME

CILINDROS HIDRAULICOS (HYDRAULIC CYLINDER)

HYDRAULIC CYLINDER

How to order

HOB - 63※ 35※ 100ST - LB + Y + ※ + ※

1 2 3 4 5 6 7 8

1 Model

HOB	: Standard type	HOD	: Double rod	HOBR	: HOB with magnet	HODR	: HOD with magnet

2 Bore DIA. **3** Rod DIA.

Bore DIA. (mm)		40	50	63	80	100	125	150	180	200
Rod DIA. (mm)	Standard-heavy duty (Max.)	25	30-35	35-40	40-50	50-60	60-80	80-100	100-120	
	With cushion	18	25	35	40	50	60	80	100	

4 Stroke Carbon steel tube: For bore ø40-200 stroke Max. 4 meters Stainless steel tube: For bore ø40-100 stroke Max. 2.8 meters

5 Mounting type / **6** Mounting accessory

FA	: Front flange	FB	: Rear flange	LA	: Side lugs	LB	: Foot stand
TC	: Center trunnion	CA	: Male clevis	CB	: Female clevis	CBP	: CB clevis with pin
Y	: Adaptor	YP	: Y adaptor with pin	I	: Adaptor	KG	: Compensating joint
PHS	: Rod end	A	: Adjustable nut	T	: T rod end	H	: H rod end

7 Cushion None: Without cushion PPV: With cushion

8 Sensor switch None: Without sensor switch ES1: 1pc of sensor switch ES2: 2 pcs of sensor switch

Specifications

Bore Size of Cylinder (mm)	Power Fluid	Material of Cylinder tube	The range of pressure (bar)	The range of temperature (°C)	The range of speed (mm/sec)	Cushion Stroke (mm)	Piston length (PM) For Stroke 1501~2500 mm	Piston length (PM) For Stroke 2501~4000 mm
ø40	Filtered oil	Carbon steel STKM-13C/ stainless steel SUS 304	3~160	-10°~+60°	8~300	20	60	120
ø50						25	70	140
ø63						25	70	140
ø80						30	80	150
ø100						35	100	180
ø125						40	100	180
ø150						45	100	180
ø180						50	140	200
ø200						55	140	200

Parts list

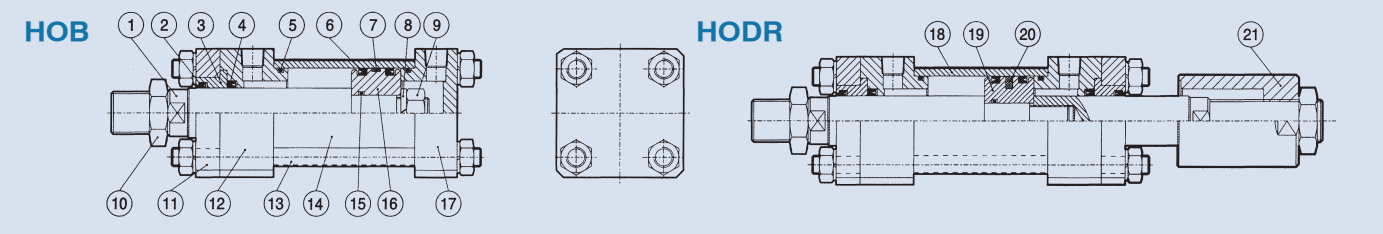

No.	Part Name	Quantity	No.	Part Name	Quantity	No.	Part Name	Quantity	No.	Part Name	Quantity
1	Piston rod	1	7	Wearing ring	1	13	Tie bolt	4	19	Piston	1
2	Dust wiper	1	8	Spring washer	1	14	Cylinder tube	1	20	Magnet ring	1
3	Rod bush	1	9	Nut	1	15	O-Ring	1	21	Adjustable nut	1
4	Rod packing	1	10	Rod nut	1	16	Piston	1			
5	O-Ring	2	11	End plate	1	17	Rear cover	1			
6	Piston packing	2	12	Rod cover	1	18	Cylinder tube	1			

HYDRAULIC CYLINDER

Dimensions

HOB
HO+B
(Standard Type)

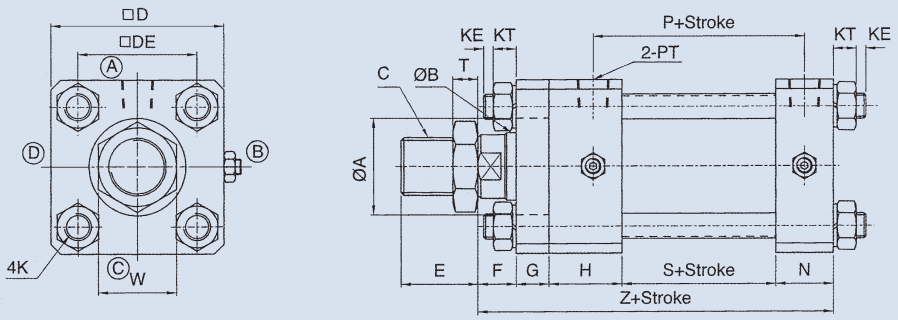

HOD
HO+D
(Double rod Type)

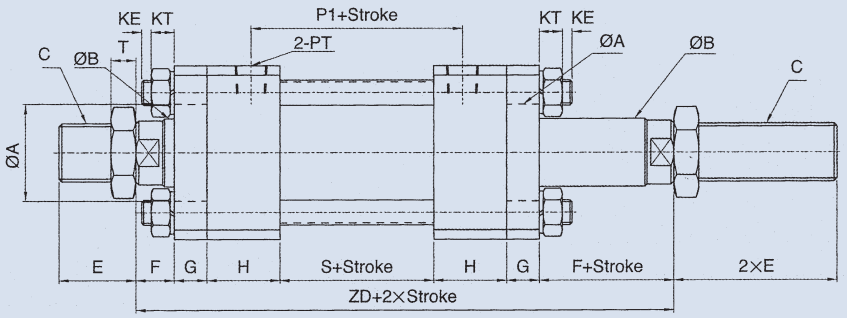

HOD
HOD+AST
(With adjustable nut)

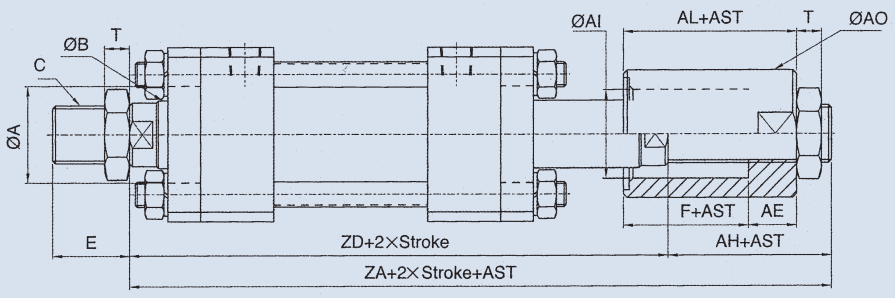

HOB-HOD Type																									Adjustable Type			
Size / Bore	øA	øB	C	□D	□DE	E	F	G	H	N	P	P1	PM	PT	K	KE	KT	S	T	W	Z	ZD	ZA	AH	AE	øAI	øAO	AL
ø40	40	25	M22xP1.5	65	45	40	20	17	33	28	76	74	30	3/8	M10xP1.25	10	10.5	50	13	32	148	190	225	35	20	30	45	40
ø50	45	30	M26xP1.5	80	56	40	20	17	38	30	85	85	35	3/8	M12xP1.5	10	13	55	13	35	160	205	245	40	25	37	55	45
ø63	50	35	M30xP1.5	90	62	45	20	17	38	30	85	85	35	3/8	M14xP1.5	10	14.5	55	13	41	160	205	245	40	25	42	60	45
ø80	55	40	M30xP1.5	110	80	45	20	20	38	35	107	105	50	1/2	M16xP1.5	10	17	75	13	41	188	231	276	45	30	47	70	50
ø100	65	50	M40xP2.0	131	95	55	25	20	41	37	123.5	120	60	1/2	M18xP1.5	10	19.5	90	15	55	213	262	307	45	30	57	90	55
ø125	80	60	M50xP2.0	162	122	70	35	30	57	47	143	140	70	3/4	M22xP1.5	10	23.5	100	15	65	269	344	394	50	35	68	100	70
ø150	100	80	M70xP2.0	195	144	80	35	30	60	50	135	130	60	3/4	1"-8 UNC	5	30	90	20	90	265	340	400	60	40	90	120	75
ø180	120	100	M90xP2.0	235	175	100	35	40	65	55	172	170	70	1	1,1/4"-8 UNC	10	35	120	20	110	315	400	465	65	40	110	150	75
ø200	120	100	M90xP2.0	262	193	100	40	40	65	60	175	170	70	1	1,1/4"-8 UNC	10	35	120	20	110	325	410	475	65	40	110	150	80

1. The length and size of the piston rod were not specified when being enlarged or reduced, the size will be constructed according to the dimensions table.
2. When the stroke exceeds (includes) 1501 mm, see the specifications table for the length of the piston. Within 1500 mm (included) see the (PM) length of piston in the dimensions table.
3. When the stroke exceeds (includes) 2000 mm, the fixed base for the tie rod must be added in the middle.
4. The screw nut for piston rod over M50 is round shape.
5. AST is the custom-made adjustable stroke.

HYDRAULIC CYLINDER

Dimensions

HOB
HOB+FA Type

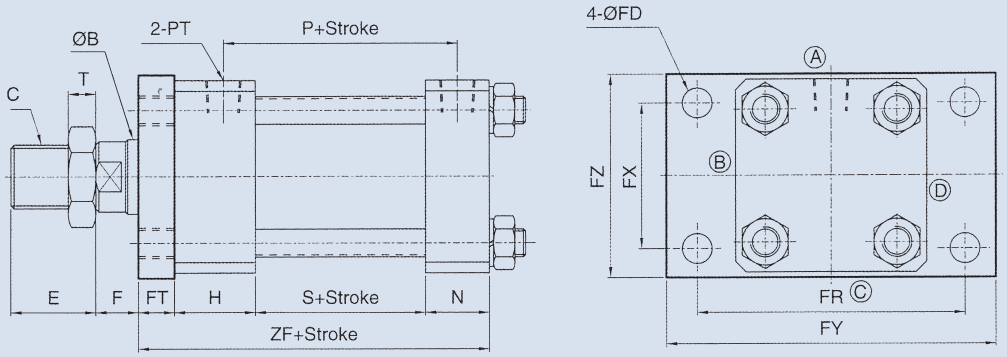

HOD
HOD+FA Type

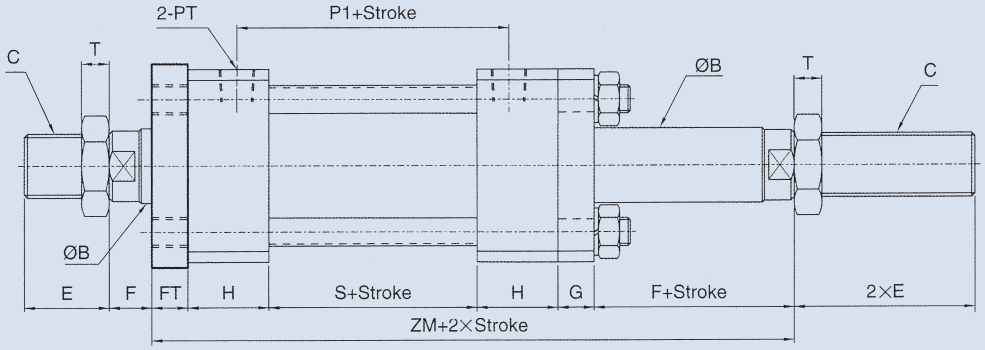

Size / Bore	HOB-HOD Type															FA Type					
	øB	C	E	F	G	H	N	P	P1	PM	PT	S	T	ZF	ZM	øFD	FT	FR	FX	FY	FZ
ø40	25	M22 x P1.5	40	20	17	33	28	76	74	30	3/8	50	13	128	170	12	17	93	50	115	75
ø50	30	M26 x P1.5	40	20	17	38	30	85	85	35	3/8	55	13	140	185	14	17	110	56	150	85
ø63	35	M30 x P1.5	45	20	17	38	30	85	85	35	3/8	55	13	140	185	14	17	126	68	155	95
ø80	40	M30 x P1.5	45	20	20	38	35	107	105	50	1/2	75	13	168	211	18	20	152	75	190	120
ø100	50	M40 x P2.0	55	25	20	41	37	123.5	120	60	1/2	90	15	188	237	20	20	180	100	220	140
ø125	60	M50 x P2.0	70	35	30	57	47	143	140	70	3/4	100	15	234	309	24	30	222	122	280	170
ø150	80	M70 x P2.0	80	35	30	60	50	135	130	60	3/4	90	20	230	305	28	30	260	155	310	206
ø180	100	M90 x P2.0	100	35	40	65	55	172	170	70	1	120	20	280	365	35	40	315	188	375	250
ø200	100	M90 x P2.0	100	40	40	65	60	175	170	70	1	120	20	285	370	35	40	355	207	425	272

1. The length and size of the piston rod were not specified when being enlarged or reduced, the size will be constructed according to the dimensions table.
2. When the stroke exceeds (includes) 1501 mm, see the specifications table for the length of the piston. Within 1500 mm (included) see the (PM) length of piston in the dimensions table.
3. The screw nut for piston rod over M50 is round shape.

HYDRAULIC CYLINDER

Dimensions

HOB
HOB+FB Type

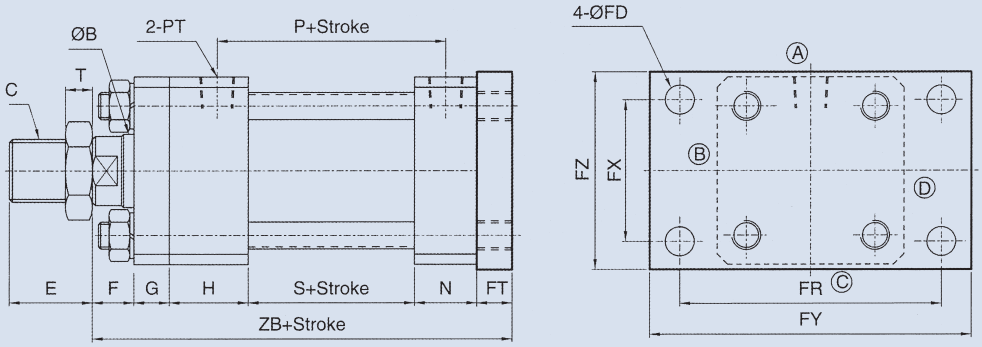

HOD
HOD+FB Type

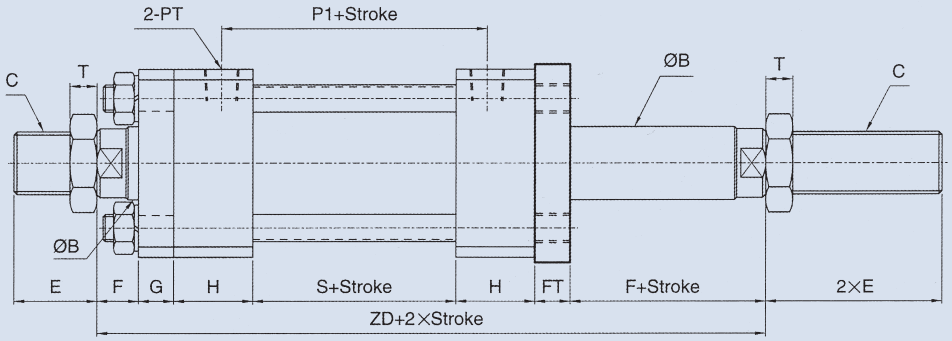

Bore \ Size	HOB-HOD Type															FB Type					
	øB	C	E	F	G	H	N	P	P1	PM	PT	S	T	ZB	ZD	øFD	FT	FR	FX	FY	FZ
ø40	25	M22 x P1.5	40	20	17	33	28	76	74	30	3/8	50	13	165	190	12	17	93	50	115	75
ø50	30	M26 x P1.5	40	20	17	38	30	85	85	35	3/8	55	13	177	205	14	17	110	56	150	85
ø63	35	M30 x P1.5	45	20	17	38	30	85	85	35	3/8	55	13	177	205	14	17	126	68	155	95
ø80	40	M30 x P1.5	45	20	20	38	35	107	105	50	1/2	75	13	208	231	18	20	152	75	190	120
ø100	50	M40 x P2.0	55	25	20	41	37	123.5	120	60	1/2	90	15	233	262	20	20	180	100	220	140
ø125	60	M50 x P2.0	70	35	30	57	47	143	140	70	3/4	100	15	299	344	24	30	222	122	280	170
ø150	80	M70 x P2.0	80	35	30	60	50	135	130	60	3/4	90	20	295	340	28	30	260	155	310	206
ø180	100	M90 x P2.0	100	35	40	65	55	172	170	70	1	120	20	355	400	35	40	315	188	375	250
ø200	100	M90 x P2.0	100	40	40	65	60	175	170	70	1	120	20	365	410	35	40	355	207	425	272

1. The length and size of the piston rod were not specified when being enlarged or reduced, the size will be constructed according to the dimensions table.
2. When the stroke exceeds (includes) 1501 mm, see the specifications table for the length of the piston. Within 1500 mm (included) see the (PM) length of piston in the dimensions table.
3. The screw nut for piston rod over M50 is round shape.

HYDRAULIC CYLINDER

Dimensions

HOB
HOB+LA Type

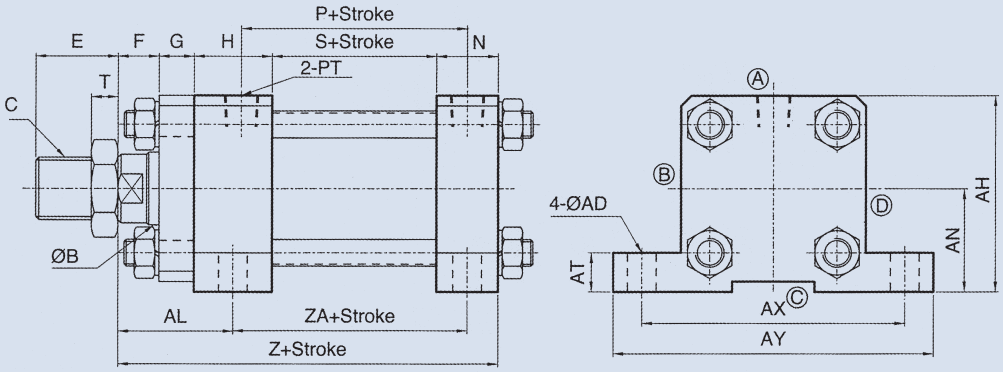

HOD
HOD+LA Type

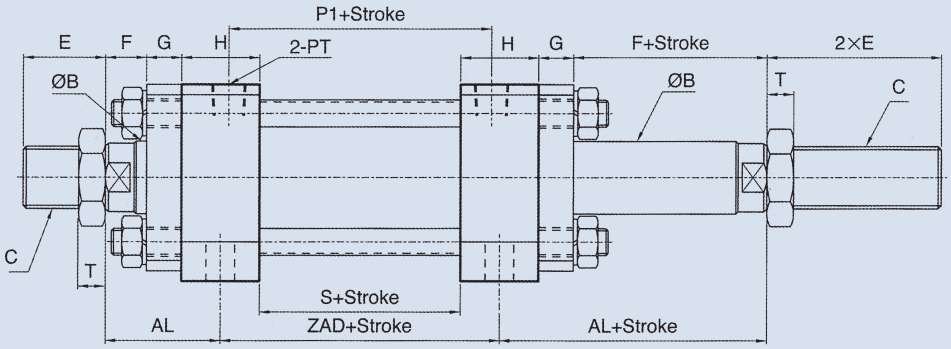

Bore \ Size	HOB-HOD Type																			LA Type			
	øB	C	E	F	G	H	N	AH	AL	AN	P	P1	PM	PT	S	T	ZA	ZAD	Z	øAD	AT	AX	AY
ø40	25	M22 x P1.5	40	20	17	33	28	69.5	53.5	37	76	74	30	3/8	50	13	80.5	83	148	12	14	90	112
ø50	30	M26 x P1.5	40	20	17	38	30	85	56	45	85	85	35	3/8	55	13	89	93	160	14	17	115	140
ø63	35	M30 x P1.5	45	20	17	38	30	95	56	50	85	85	35	3/8	55	13	89	93	160	14	19	128	156
ø80	40	M30 x P1.5	45	20	20	38	35	115	59	60	107	105	50	1/2	75	13	111.5	113	188	18	25	152	184
ø100	50	M40 x P2.0	55	25	20	41	37	135.5	65.5	70	123.5	120	60	1/2	90	15	129	131	213	21	27	178	210
ø125	60	M50 x P2.0	70	35	30	57	47	171	93.5	90	143	140	70	3/4	100	15	152	157	269	24	30	230	280
ø150	80	M70 x P2.0	80	35	30	60	50	208	95	113	135	130	60	3/4	90	20	145	150	265	28	35	270	325
ø180	100	M90 x P2.0	100	35	40	65	55	260.5	107.5	143	172	170	70	1	120	20	180	185	315	35	45	330	395
ø200	100	M90 x P2.0	100	40	40	65	60	292	112.5	161	175	170	70	1	120	20	182.5	185	325	35	50	360	430

1. The length and size of the piston rod were not specified when being enlarged or reduced, the size will be constructed according to the dimensions table.
2. When the stroke exceeds (includes) 1501 mm, see the specifications table for the length of the piston. Within 1500 mm (included) see the (PM) length of piston in the dimensions table.
3. When the stroke exceeds (includes) 2000 mm, the fixed base for the tie rod must be added in the middle.
4. The screw nut for piston rod over M50 is round shape.

HYDRAULIC CYLINDER

Dimensions

HOB
HOB+LB Type

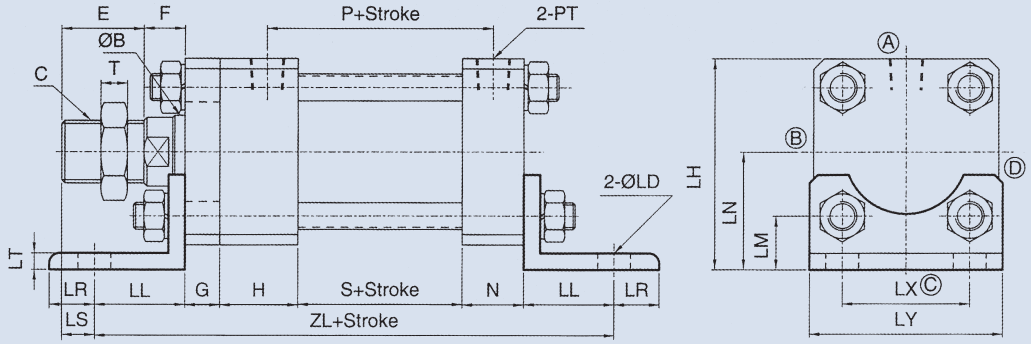

HOD
HOD+LB Type

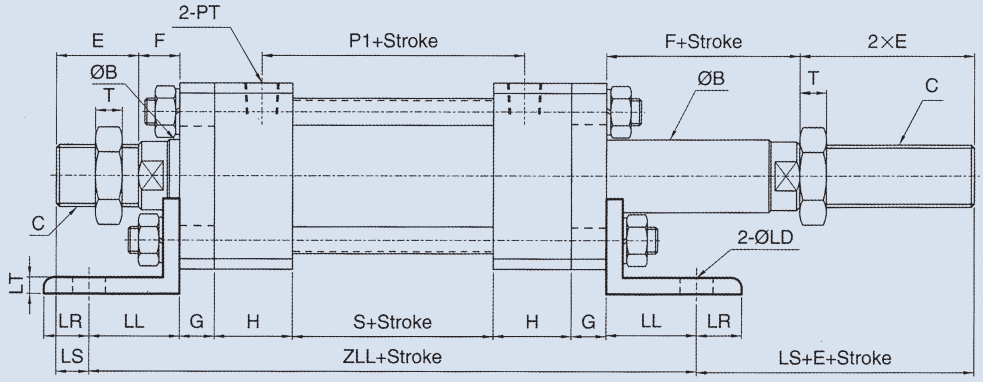

HOB-HOD Type																			LB Type						
Size / Bore	øB	C	E	F	G	H	N	LH	LN	LS	P	P1	PM	PT	S	T	ZL	ZLL	øLD	LL	LM	LR	LT	LX	LY
ø40	25	M22 x P1.5	40	20	17	33	28	78.5	46	22.5	76	74	30	3/8	50	13	203	225	11	37.5	23.5	12.5	6	45	68
ø50	30	M26 x P1.5	40	20	17	38	30	94	54	18	85	85	35	3/8	55	13	224	249	14	42	26	22	8	56	85
ø63	35	M30 x P1.5	45	20	17	38	30	102	57	21	85	85	35	3/8	55	13	228	253	16	44	26	22	8	62	95
ø80	40	M30 x P1.5	45	20	20	38	35	131	76	2	107	105	50	1/2	75	13	294	317	18	63	36	27	13	80	120
ø100	50	M40 x P2.0	55	25	20	41	37	158.5	93	14	123.5	120	60	1/2	90	15	320	344	20	66	45.5	24	15	100	140
ø125	60	M50 x P2.0	70	35	30	57	47	195	114	25	143	140	70	3/4	100	15	394	434	24	80	53	30	15	122	169
ø150	80	M70 x P2.0	80	35	30	60	50	220	125	35	135	130	60	3/4	90	20	390	430	28	80	53	30	20	144	200
ø180	100	M90 x P2.0	100	35	40	65	55	267.5	150	45	172	170	70	1	120	20	460	510	35	90	62.5	40	20	175	240
ø200	100	M90 x P2.0	100	40	40	65	60	301	170	45	175	170	70	1	120	20	475	520	35	95	73.5	40	25	193	265

1. The length and size of the piston rod were not specified when being enlarged or reduced, the size will be constructed according to the dimensions table.
2. When the stroke exceeds (includes) 1501 mm, see the specifications table for the length of the piston. Within 1500 mm (included) see the (PM) length of piston in the dimensions table.
3. When the stroke exceeds (includes) 2000 mm, the fixed base for the tie rod must be added in the middle.
4. The screw nut for piston rod over M50 is round shape.

HYDRAULIC CYLINDER

Dimensions

HOB
HOB+TA Type

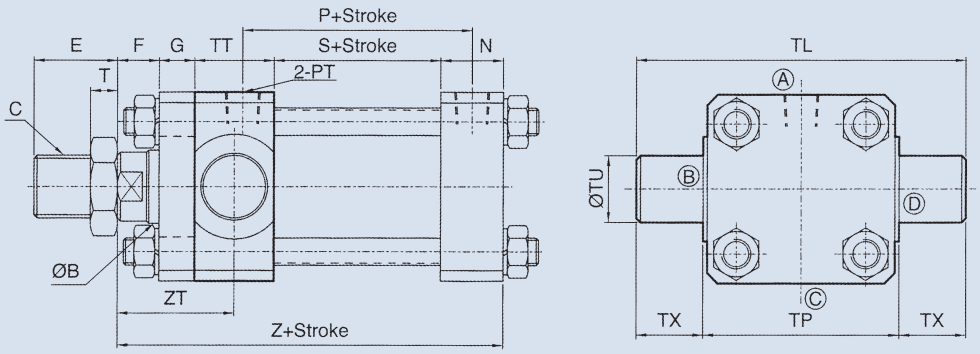

HOD
HOD+TA Type

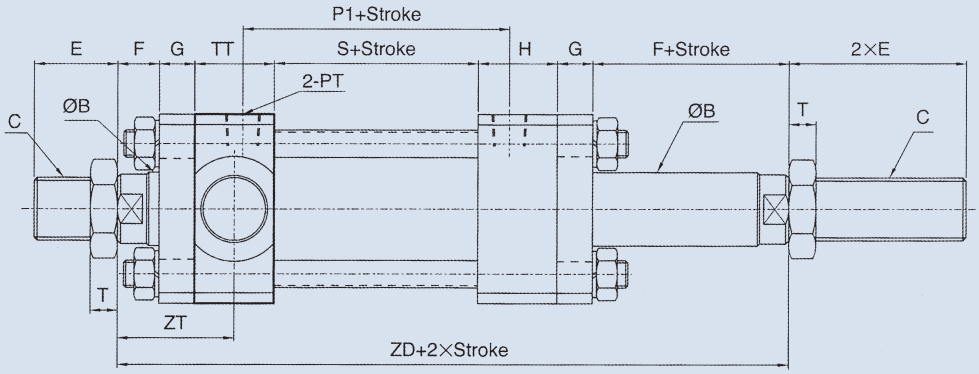

Bore \ Size	HOB-HOD Type																TA Type				
	øB	C	E	F	G	H	N	P	P1	PM	PT	S	T	Z	ZD	ZT	øTU	TL	TP	TT	TX
ø40	25	M22 x P1.5	40	20	17	33	28	76	74	30	3/8	50	13	148	190	53.5	20	109	69	33	20
ø50	30	M26 x P1.5	40	20	17	38	30	85	85	35	3/8	55	13	160	205	56	25	134	84	38	25
ø63	35	M30 x P1.5	45	20	17	38	30	85	85	35	3/8	55	13	160	205	56	32	154	94	38	30
ø80	40	M30 x P1.5	45	20	20	38	35	107	105	50	1/2	75	13	188	231	59	32	174	114	38	30
ø100	50	M40 x P2.0	55	25	20	41	37	123.5	120	60	1/2	90	15	213	262	65.5	35	205	135	41	35
ø125	60	M50 x P2.0	70	35	30	57	47	143	140	70	3/4	100	15	269	344	93.5	45	258	168	57	45
ø150	80	M70 x P2.0	80	35	30	60	50	135	130	60	3/4	90	20	265	340	95	50	300	200	60	50

1. The length and size of the piston rod were not specified when being enlarged or reduced, the size will be constructed according to the dimensions table.
2. When the stroke exceeds (includes) 1501 mm, see the specifications table for the length of the piston. Within 1500 mm (included) see the (PM) length of piston in the dimensions table.
3. When the stroke exceeds (includes) 2000 mm, the fixed base for the tie rod must be added in the middle.
4. The screw nut for piston rod over M50 is round shape.

HYDRAULIC CYLINDER

Dimensions

HOB
HOB+TC Type

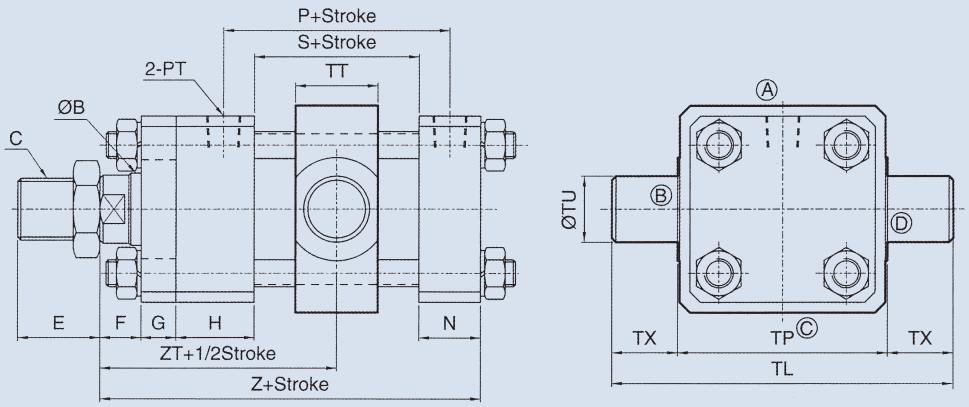

HOD
HOD+TC Type

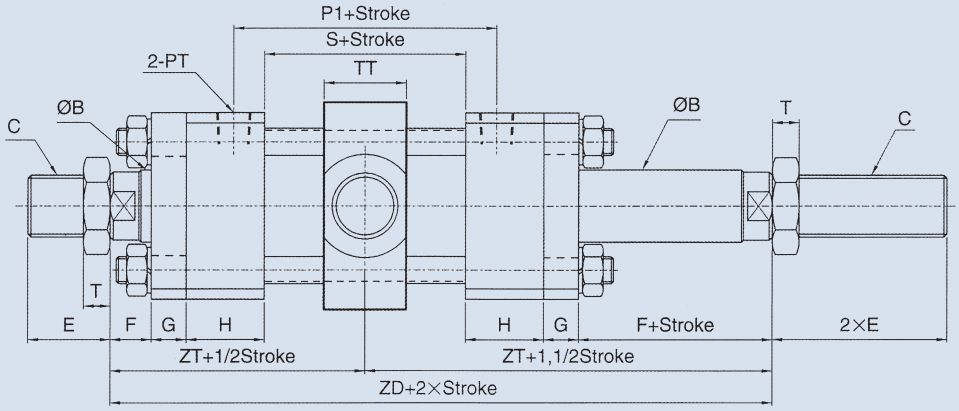

Bore \ Size	HOB-HOD Type																TC Type				
	øB	C	E	F	G	H	N	P	P1	PM	PT	S	T	Z	ZD	ZT	øTU	TL	TP	TT	TX
ø40	25	M22 x P1.5	40	20	17	33	28	76	74	30	3/8	50	13	148	190	95	20	115	75	28	20
ø50	30	M26 x P1.5	40	20	17	38	30	85	85	35	3/8	55	13	160	205	102.5	25	140	90	33	25
ø63	35	M30 x P1.5	45	20	17	38	30	85	85	35	3/8	55	13	160	205	102.5	32	166	102	40	32
ø80	40	M30 x P1.5	45	20	20	38	35	107	105	50	1/2	75	13	188	231	115.5	32	184	120	43	32
ø100	50	M40 x P2.0	55	25	20	41	37	123.5	120	60	1/2	90	15	213	262	131	40	220	140	53	40
ø125	60	M50 x P2.0	70	35	30	57	47	143	140	70	3/4	100	15	269	344	172	50	275	175	58	50
ø150	80	M70 x P2.0	80	35	30	60	50	135	130	60	3/4	90	20	265	340	170	60	326	206	73	60
ø180	100	M90 x P2.0	100	35	40	65	55	172	170	70	1	120	20	315	400	200	80	403	243	98	80
ø200	100	M90 x P2.0	100	40	40	65	60	175	170	70	1	120	20	325	410	205	90	452	272	108	90

1. The length and size of the piston rod were not specified when being enlarged or reduced, the size will be constructed according to the dimensions table.
2. When the stroke exceeds (includes) 1501 mm, see the specifications table for the length of the piston. Within 1500 mm (included) see the (PM) length of piston in the dimensions table.
3. The screw nut for piston rod over M50 is round shape.

HYDRAULIC CYLINDER

Dimensions

HOB
HOB+CA Type

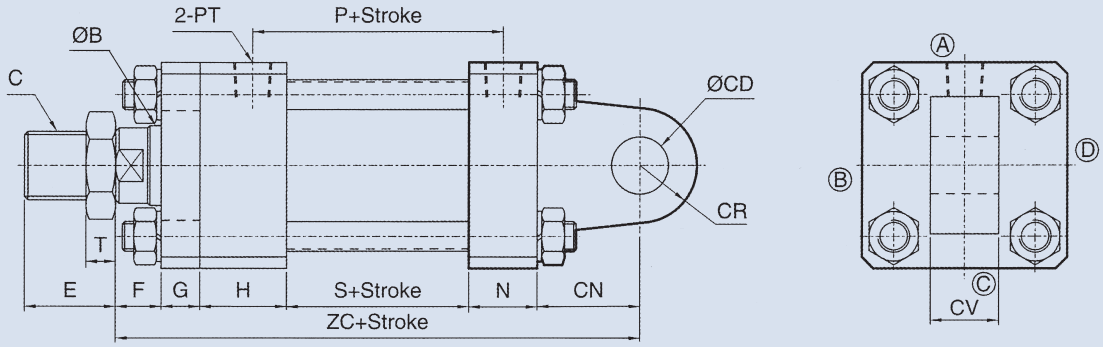

HOB
HOB+CB Type

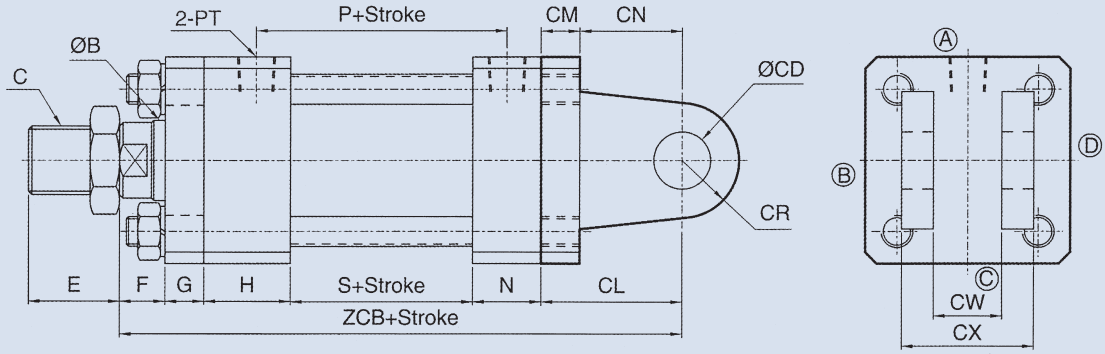

Bore \ Size	HOB Type														CA-CB Type							
	øB	C	E	F	G	H	N	P	PM	PT	S	T	ZC	ZCB	øCD	CL	CM	CN	CR	CV	CW	CX
ø40	25	M22 x P1.5	40	20	17	33	28	76	30	3/8	50	13	173	190	16	42	17	25	15	22	23	47
ø50	30	M26 x P1.5	40	20	17	38	30	85	35	3/8	55	13	195	212	20	52	17	35	20	22	23	47
ø63	35	M30 x P1.5	45	20	17	38	30	85	35	3/8	55	13	205	222	25	62	17	45	25	30	31	59
ø80	40	M30 x P1.5	45	20	20	38	35	107	50	1/2	75	13	238	258	30	70	20	50	30	35	36	76
ø100	50	M40 x P2.0	55	25	20	41	37	123.5	60	1/2	90	15	273	293	35	80	20	60	35	40	41	81
ø125	60	M50 x P2.0	70	35	30	57	47	143	70	3/4	100	15	339	369	50	100	30	70	50	55	56	106
ø150	80	M70 x P2.0	80	35	30	60	50	135	60	3/4	90	20	345	375	60	110	30	80	60	60	61	121
ø180	100	M90 x P2.0	100	35	40	65	55	172	70	1	120	20	415	455	80	140	40	100	80	80	81	161
ø200	100	M90 x P2.0	100	40	40	65	60	175	70	1	120	20	435	475	90	150	40	110	90	90	91	171

1. The length and size of the piston rod were not specified when being enlarged or reduced, the size will be constructed according to the dimensions table.
2. When the stroke exceeds (includes) 1501 mm, see the specifications table for the length of the piston. Within 1500 mm (included) see the (PM) length of piston in the dimensions table.
3. When the stroke exceeds (includes) 2000 mm, the fixed base for the tie rod must be added in the middle.
4. The screw nut for piston rod over M50 is round shape.

HYDRAULIC CYLINDER

How to order

CROC - 63※ 35※ 100ST - LB + Y

1 2 3 4 5 6

1 Model

CROB : LB type CROC : CA type CROA : FLAT type

2 Bore DIA. **3** Rod DIA.

Bore DIA. (mm)	50	63	80	100	125
Rod DIA.(mm) Standard-heavy duty (Max.)	30	35-45	40-55	50-70	60-80

4 Stroke

5 Mounting type

FA : Front flange FB : Rear flange TC : Center trunnion

6 Mounting accessory

Y : Adaptor YP : Y adaptor with pin I : Adaptor H : H rod end

KG : Compensating joint PHS : Rod end T : T rod end

Specifications

Bore Size of Cylinder (mm)	Power Fluid	Material of Cylinder tube	The range of pressure (bar)	The range of temperature (°C)	The range of speed (mm/sec)	Piston length (PM) For Stroke 1500~3500 mm	Piston length (PM) For Stroke 3501~6000 mm
ø50	Filtered oil	Carbon steel STKM-13C	3~160	-10°~+60°	8~300	90	120
ø63						100	150
ø80						100	150
ø100						120	180
ø125						140	200

Parts list

CROC

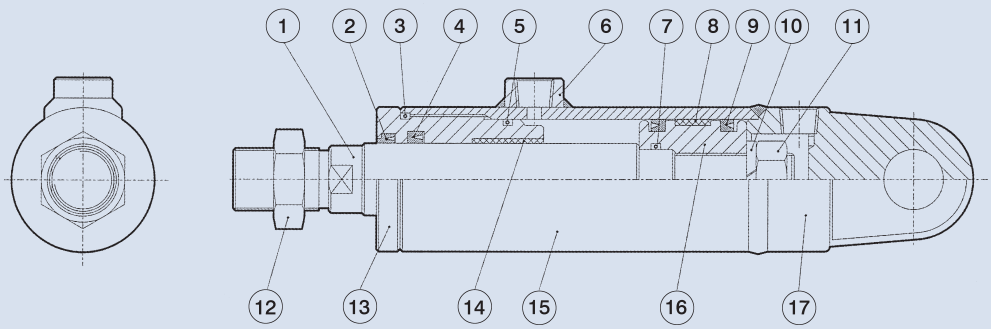

No.	Part Name	Quantity	No.	Part Name	Quantity	No.	Part Name	Quantity	No.	Part Name	Quantity
1	Piston rod	1	6	PT connectors	1	11	Nut	1	16	Piston	1
2	Dust wiper	1	7	O-Ring	1	12	Rod nut	1	17	Rear cover	1
3	O-Ring	1	8	Wearing ring	1	13	Rod cover	1			
4	Rod packing	1	9	Piston packing	2	14	Drymet bush	1			
5	O-Ring	1	10	Spring washer	1	15	Cylinder tube	1			

HYDRAULIC CYLINDER

Dimensions

CROC
CRO+CA Type

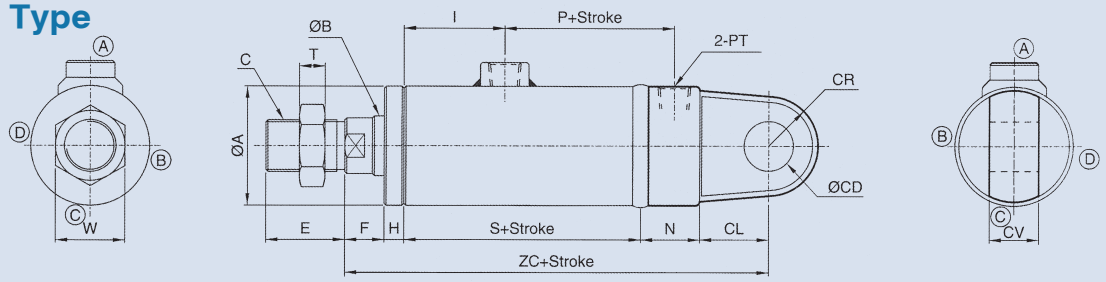

Bore \ Size	CRO Type															CA Type			
	øA	øB	C	E	F	H	I	N	P	PM	PT	S	W	T	ZC	øCD	CL	CV	CR
ø50	60	30	M26 x P1.5	40	20	10	56	30	71	45	3/8	110	35	13	205	25	35	25	25
ø63	73	35	M30 x P1.5	45	25	10	56	35	79	50	3/8	115	41	13	230	30	45	30	30
ø80	95	40	M30 x P1.5	50	25	15	64	40	83	50	3/8	125	41	13	255	30	50	35	30
ø100	114	50	M40 x P2.0	55	25	20	78	40	94	60	1/2	150	55	15	295	35	60	40	35
ø125	140	60	M50 x P2.0	70	35	20	78	50	109	70	1/2	160	65	15	335	50	70	55	50

1. The length and size of the piston rod were not specified when being enlarged or reduced, the size will be constructed according to the dimensions table.
2. When the stroke exceeds (includes) 1500 mm, see the specifications table for the length of the piston. Within 1499 mm (included) see the (PM) length of piston in the dimensions table.
3. The position of øCD and øPT on CA clevis showing on the drawing is for normal type and on the same direction is for optional type.

CROCB
CRO+CB Type

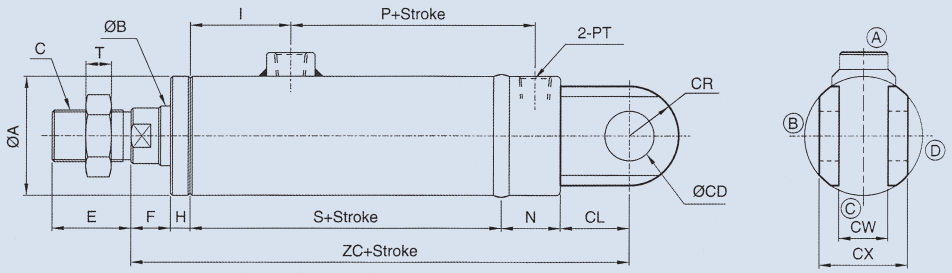

Bore \ Size	CRO Type														CB Type				
	øA	øB	C	E	F	H	I	N	P	PM	PT	S	T	ZC	øCD	CL	CR	CW	CX
ø50	60	30	M26 x P1.5	40	20	10	56	30	71	45	3/8	110	13	205	25	35	25	26	46
ø63	73	35	M30 x P1.5	45	25	10	56	35	79	50	3/8	115	13	230	30	45	30	31	56
ø80	95	40	M30 x P1.5	50	25	15	64	40	83	50	3/8	125	13	255	30	50	30	36	66
ø100	114	50	M40 x P2.0	55	25	20	78	40	94	60	1/2	150	15	295	35	60	35	41	81
ø125	140	60	M50 x P2.0	70	35	20	78	50	109	70	1/2	160	15	335	50	70	50	56	106

1. The length and size of the piston rod were not specified when being enlarged or reduced, the size will be constructed according to the dimensions table.
2. When the stroke exceeds (includes) 1500 mm, see the specifications table for the length of the piston. Within 1499 mm (included) see the (PM) length of piston in the dimensions table.
3. The position of øCD and øPT on CB clevis showing on the drawing is for normal type and on the same direction is for optional type.

HYDRAULIC CYLINDER

Dimensions

CROA
CROA+FA Type

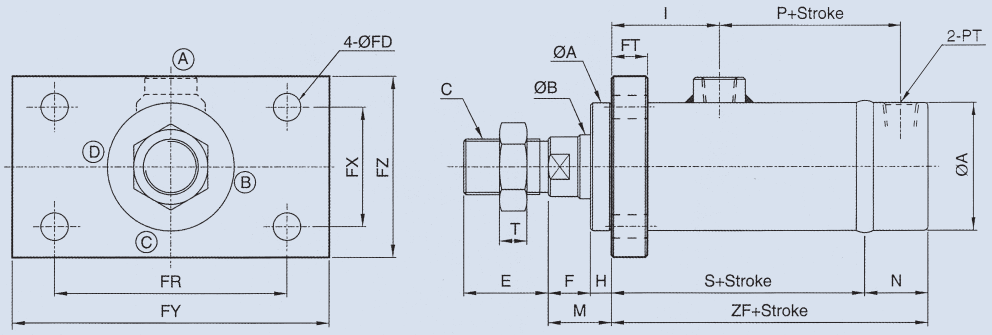

Bore \ Size	CROA Type															FA Type					
	øA	øB	C	E	F	H	I	M	N	P	PM	PT	S	T	ZF	øFD	FT	FR	FX	FY	FZ
ø50	60	30	M26 x P1.5	40	20	10	56	30	30	71	45	3/8	110	13	140	14	17	110	56	150	85
ø63	73	35	M30 x P1.5	45	25	10	56	35	35	79	50	3/8	115	13	150	14	17	126	68	155	95
ø80	95	40	M30 x P1.5	50	25	15	64	40	40	83	50	3/8	125	13	165	18	20	152	75	190	120
ø100	114	50	M40 x P2.0	55	25	20	78	45	40	94	60	1/2	150	15	190	20	20	180	100	220	140
ø125	140	60	M50 x P2.0	70	35	20	78	55	50	109	70	1/2	160	15	210	24	30	222	122	280	170

1. The length and size of the piston rod were not specified when being enlarged or reduced, the size will be constructed according to the dimensions table.
2. When the stroke exceeds (includes) 1500 mm, see the specifications table for the length of the piston. Within 1499 mm (included) see the (PM) length of piston in the dimensions table.

CROB
CROB+FB Type

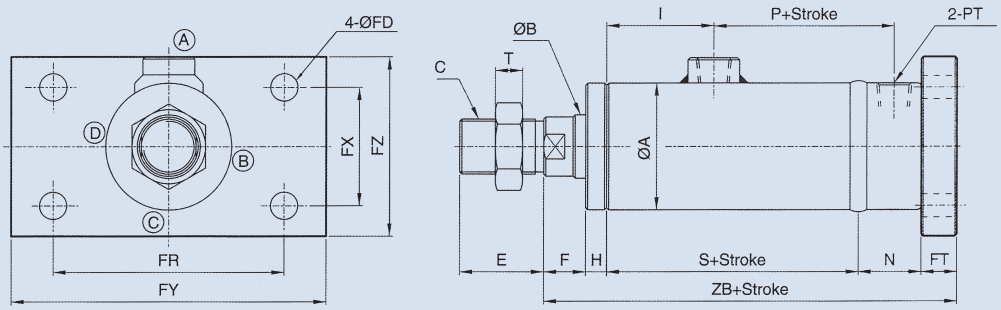

Bore \ Size	CRO Type														FB Type					
	øA	øB	C	E	F	H	I	N	P	PM	PT	S	T	ZB	øFD	FT	FR	FX	FY	FZ
ø50	60	30	M26 x P1.5	40	20	10	56	30	71	45	3/8	110	13	187	14	17	110	56	150	85
ø63	73	35	M30 x P1.5	45	25	10	56	35	79	50	3/8	115	13	202	14	17	126	68	155	95
ø80	95	40	M30 x P1.5	50	25	15	64	40	83	50	3/8	125	13	225	18	20	152	75	190	120
ø100	114	50	M40 x P2.0	55	25	20	78	40	94	60	1/2	150	15	255	20	20	180	100	220	140
ø125	140	60	M50 x P2.0	70	35	20	78	50	109	70	1/2	160	15	295	24	30	222	122	280	170

1. The length and size of the piston rod were not specified when being enlarged or reduced, the size will be constructed according to the dimensions table.
2. When the stroke exceeds (includes) 1500 mm, see the specifications table for the length of the piston. Within 1499 mm (included) see the (PM) length of piston in the dimensions table.

HYDRAULIC CYLINDER

Dimensions

CROB
CROB Type

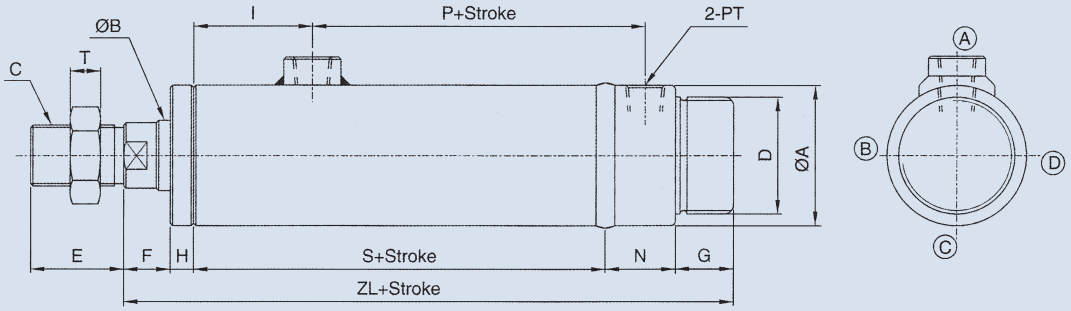

CROB Type																
Size / Bore	øA	øB	C	D	E	F	G	H	I	N	P	PM	PT	S	T	ZL
ø50	60	30	M26 x P1.5	M50 x P2.0	40	20	25	10	56	30	71	45	3/8	110	13	195
ø63	73	35	M30 x P1.5	M60 x P2.0	45	25	30	10	56	35	79	50	3/8	115	13	215
ø80	95	40	M30 x P1.5	M70 x P2.0	50	25	30	15	64	40	83	50	3/8	125	13	235
ø100	114	50	M40 x P2.0	M90 x P2.0	55	25	30	20	78	40	94	60	1/2	150	15	265
ø125	140	60	M50 x P2.0	M120 x P2.0	70	35	30	20	78	50	109	70	1/2	160	15	295

1. The length and size of the piston rod were not specified when being enlarged or reduced, the size will be constructed according to the dimensions table.
2. When the stroke exceeds (includes) 1500 mm, see the specifications table for the length of the piston. Within 1499 mm (included) see the (PM) length of piston in the dimensions table.

CROA
CROA+TC Type

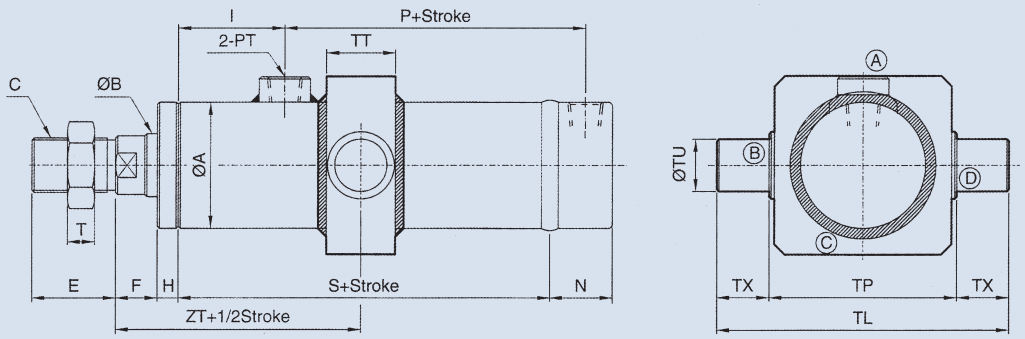

CROA Type															TC Type				
Size / Bore	øA	øB	C	E	F	H	I	N	P	PM	PT	S	T	ZT	øTU	TP	TL	TT	TX
ø50	60	30	M26 x P1.5	40	20	10	56	30	71	45	3/8	110	13	85	25	90	140	33	25
ø63	73	35	M30 x P1.5	45	25	10	56	35	79	50	3/8	115	13	92.5	32	102	166	40	32
ø80	95	40	M30 x P1.5	50	25	15	64	40	83	50	3/8	125	13	102.5	32	120	184	43	32
ø100	114	50	M40 x P2.0	55	25	20	78	40	94	60	1/2	150	15	120	40	140	220	53	40
ø125	140	60	M50 x P2.0	70	35	20	78	50	109	70	1/2	160	15	135	50	175	275	58	50

1. The length and size of the piston rod were not specified when being enlarged or reduced, the size will be constructed according to the dimensions table.
2. When the stroke exceeds (includes) 1500 mm, see the specifications table for the length of the piston. Within 1499 mm (included) see the (PM) length of piston in the dimensions table.

HYDRAULIC CYLINDER-ACCESSORIES

Dimensions

Adaptor I, Y

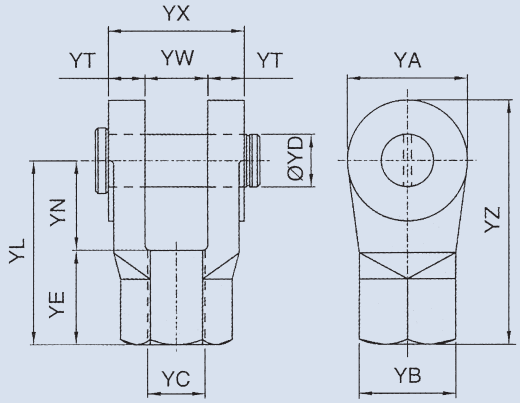

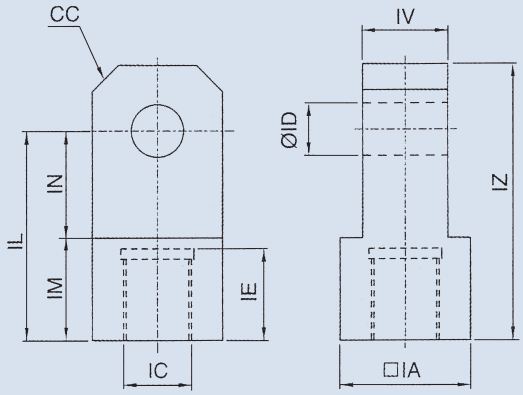

Y type adaptor with pin Material: FCD45 (ductile iron body)

Type	YA	YB	YC	YD	YE	YL	YN	YT	YW	YX	YZ
MY-014	29	27.5	M14 x P1.5	12	35	56	21	14	16	44	70
MY-016	29	27.5	M16 x P1.5	12	35	56	21	14	16	44	70
MY-018	29	27.5	M18 x P1.5	12	35	56	21	14	16	44	70
MY-022	46	37	M22 x P1.5	20	36	70	34	14	24	52	93
MY-026	52	42	M26 x P1.5	20	35	70	35	15	28	58	96
MY-030	55	42	M30 x P1.5	20	41	80	39	20	32	72	107
MY-030A	55	47	M30 x P1.5	25	41	80	39	22	40	84	107

I type adaptor Material: SS41 (steel)

Type	IA	IC	ID	IE	IL	IM	IN	IV	IZ	CC
FI-018	32	M18 x P1.5	16	23	50	25	25	18	70	8
FI-022	40	M22 x P1.5	20	23	55	25	30	20	80	10
FI-026	50	M26 x P1.5	25	28	60	30	30	25	90	10
FI-036	60	M36 x P1.5	30	32	75	35	40	35	110	10
FI-045	70	M45 x P2.0	35	38	90	40	50	40	130	10

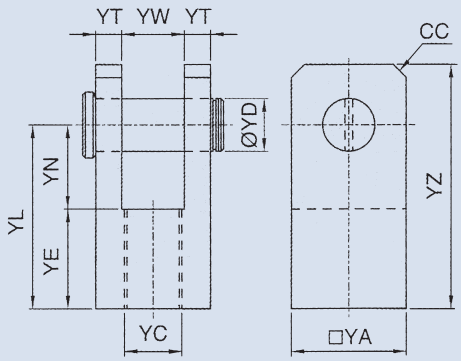

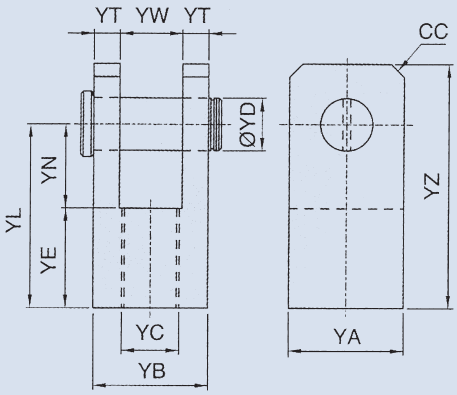

Y type adaptor with pin Material: SS41 (steel)

Type	YA	YC	YD	YE	YN	YL	YT	YW	YZ	CC
HY-014	32	M14 x P1.5	12	36	20	56	8	16	70	6
HY-016	32	M16 x P1.5	12	36	20	56	8	16	70	6
HY-018	38	M18 x P1.5	16	36	20	56	8	16	70	6
HY-022	44	M22 x P1.5	20	38	32	70	10	24	93	10
HY-026	50	M26 x P1.5	20	37	33	70	11.5	27	96	10
HY-030	60	M30 x P1.5	30	40	48	88	15	30	115	10
HY-040	70	M40 x P2.0	35	47	46	93	20	30	127	15
HY-050	80	M50 x P2.0	40	50	50	100	22.5	35	140	15
HY-070	115	M70 x P2.0	50	60	60	120	27.5	60	170	25
HY-090	150	M90 x P2.0	70	85	85	170	40	70	240	30

Y type adaptor with pin Material: SS41 (steel)

Type	YA	YB	YC	YD	YE	YN	YL	YT	YW	YZ	CC
FY-018	32	38	M18 x P1.5	16	25	25	50	10	18	70	8
FY-022	40	44	M22 x P1.5	20	25	30	55	12	20	80	10
FY-026	50	55	M26 x P1.5	25	30	30	60	15	25	90	15
FY-036	60	65	M36 x P1.5	30	35	40	75	15	35	110	15
FY-045	70	80	M45 x P2.0	35	40	50	90	20	40	135	15

HYDRAULIC CYLINDER-ACCESSORIES

Dimensions

Adaptor I, H, T

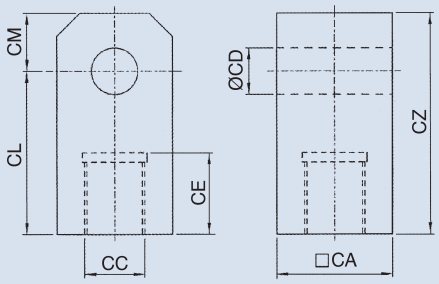

I type adaptor — Material: SS41 (steel)

Type	□CA	CC	CD	CE	CL	CM	CZ
CI-026	44.5	M26 x P1.5	25	40	60	25	85
CI-030	50.8	M30 x P1.5	30	45	70	30	100
CI-040	60	M40 x P2.0	30	50	75	30	105
CI-050	70	M50 x P2.0	35	55	85	35	120
CI-060	90	M60 x P2.0	50	70	105	50	155

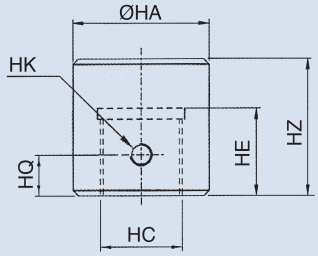

H type adaptor for welding — Material: SS41 (steel)

Type	øHA	HC	HE	HK	HQ	HZ
HH-010	20	M10 x P1.25	20	M6 x P1.0	10	30
HH-014	35	M14 x P1.5	25	M8 x P1.25	12	40
HH-016	35	M16 x P1.5	25	M8 x P1.25	12	40
HH-018	35	M18 x P1.5	25	M8 x P1.25	12	40
HH-022	40	M22 x P1.5	32	M8 x P1.25	15	50
HH-026	45	M26 x P1.5	32	M8 x P1.25	15	50
HH-030	50	M30 x P1.5	35	M8 x P1.25	20	55
HH-036	55	M36 x P2.0	40	M8 x P1.25	20	60
HH-040	60	M40 x P2.0	48	M10 x P1.5	25	65
HH-045	70	M45 x P2.0	52	M10 x P1.5	25	70
HH-050	80	M50 x P2.0	55	M10 x P1.5	25	75
HH-060	90	M60 x P2.0	55	M10 x P1.5	30	80
HH-070	100	M70 x P2.0	65	M12 x P1.75	30	100
HH-090	140	M90 x P2.0	85	M12 x P1.75	40	120

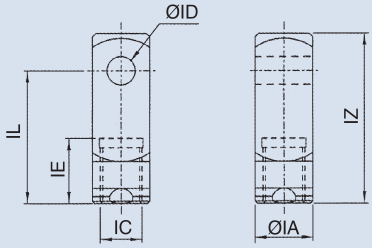

I type adaptor — Material: SS41 (steel)

Type	IA	IC	ID	IE	IL	IZ
SI-014	25.4	M14 x P1.5	12	40	57	73
SI-016	25.4	M16 x P1.5	12	40	57	73
SI-018	25.4	M18 x P1.5	12	40	57	73
SI-022	31.75	M22 x P1.5	16	40	59	76

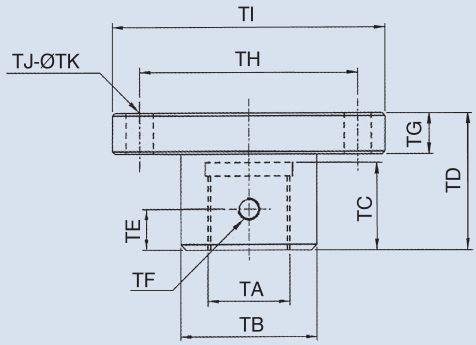

T type adaptor — Material: SS41 (steel)

Type	TA	TB	TC	TD	TE	TF	TG	TH	TI	TJ	TK
HT-010	M10 x P1.25	20	20	30	10	M6 x P1.0	8	40	60	4	8
HT-014	M14 x P1.5	30	25	40	12	M8 x P1.25	10	55	80	4	10
HT-016	M16 x P1.5	30	25	40	12	M8 x P1.25	10	55	80	4	10
HT-018	M18 x P1.5	30	25	40	12	M8 x P1.25	10	55	80	4	10
HT-022	M22 x P1.5	35	32	50	15	M8 x P1.25	15	65	85	4	10
HT-026	M26 x P1.5	40	32	50	15	M8 x P1.25	15	70	90	4	10
HT-030	M30 x P1.5	55	35	55	20	M8 x P1.25	20	75	100	4	12
HT-036	M36 x P2.0	50	48	55	20	M8 x P1.25	20	80	105	4	12
HT-040	M40 x P2.0	60	48	65	25	M10 x P1.5	25	90	115	6	12
HT-045	M45 x P2.0	70	55	65	25	M10 x P1.5	25	100	125	6	12
HT-050	M50 x P2.0	80	55	75	25	M10 x P1.5	25	110	140	6	14
HT-060	M60 x P2.0	90	55	80	30	M10 x P1.5	30	120	150	6	14
HT-070	M70 x P2.0	100	65	100	30	M12 x P1.75	30	140	180	6	18
HT-090	M90 x P2.0	140	85	120	40	M12 x P1.75	40	180	220	6	18

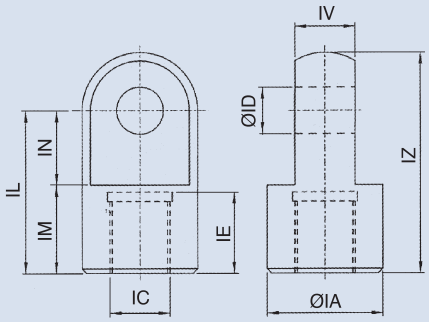

I type adaptor — Material: SS41 (steel)

Type	IA	IC	øID	IE	IL	IM	IN	IV	IZ
HI-026	50	M26 x P1.5	25	40	85	45	40	30	110
HI-030	55	M30 x P1.5	25	40	83	45	38	35	110
HI-040	75	M40 x P2.0	35	50	90	40	50	45	130
HI-050	90	M50 x P2.0	50	60	105	50	55	55	150
HI-070	115	M70 x P2.0	60	65	120	65	55	60	177
HI-090	150	M90 x P2.0	70	82	180	90	90	70	250

4ManPro

Elements For Manufacturing Processes

HI HYDROME

INTERCAMBIADORES DE CALOR (HEAT EXCHANGER)

FIN TUBE TYPE OIL COOLER
NO-FIN TUBE TYPE OIL COOLER

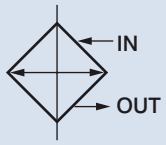

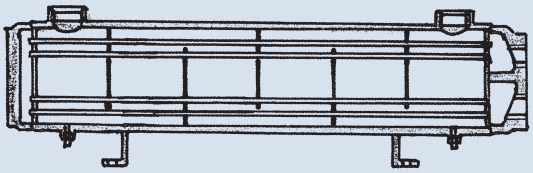

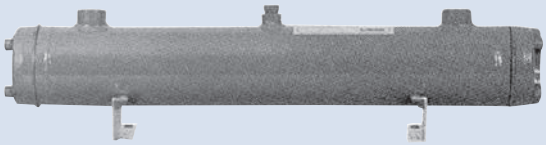

How to order

HT, HH - 14 05 - ※

1 2 3 4

1	Model HT: Fin tube type HH: No-Fin tube type HTF: Fin tube type HHF: No-Fin tube type
2	Shell outside diameter
3	Tube length
4	Cooling water None: Water (standard type) B: Brine water

Specifications

Model	Heat Diffusion Area(m²)		Flow (lpm)	Weight(kg)	
	HT(F)	HH(F)		HT(F)	HH(F)
HT,HH-0905	0.41	0.24	60	10	10
HT,HH-0908	0.7	0.39	100	14	14
HT,HH-1405	1.1	0.54	150	20	20
HT,HH-1408	1.9	0.84	250	25	26
HT,HH-1412	2.9	1.28	350	37	35
HT,HH-1712	4.6	2.17	600	48	50
HT,HH-1716	6.5	2.89	840	56	60
HT,HH-1722	7.2	3.63	1000	72	72
HTF,HHF-2208	5.6	2.61	800	72	78
HTF,HHF-2212	8.6	4.02	1200	93	110
HTF,HHF-2216	11.6	5.39	1500	118	130
HTF,HHF-2222	14.6	7.15	1800	260	290

Model	Heat Diffusion Area(m²)		Flow (lpm)	Weight(kg)	
	HTF	HHF		HTF	HHF
HTF,HHF-2508	8	3.55	1000	100	130
HTF,HHF-2512	12.2	5.41	1600	146	170
HTF,HHF-2516	16.4	7.21	1800	168	190
HTF,HHF-2522	20.8	9.08	2200	260	300
HTF-3208	13.3	-	1400	167	-
HTF-3212	20	-	2100	204	-
HTF-3216	26.6	-	2800	241	-
HTF-3222	33.4	-	3500	280	-
HTF-3508	15.5	-	1640	222	-
HTF-3512	23.6	-	2500	264	-
HTF-3516	31.5	-	3300	306	-
HTF-3522	39.6	-	4400	348	-

Dimensions

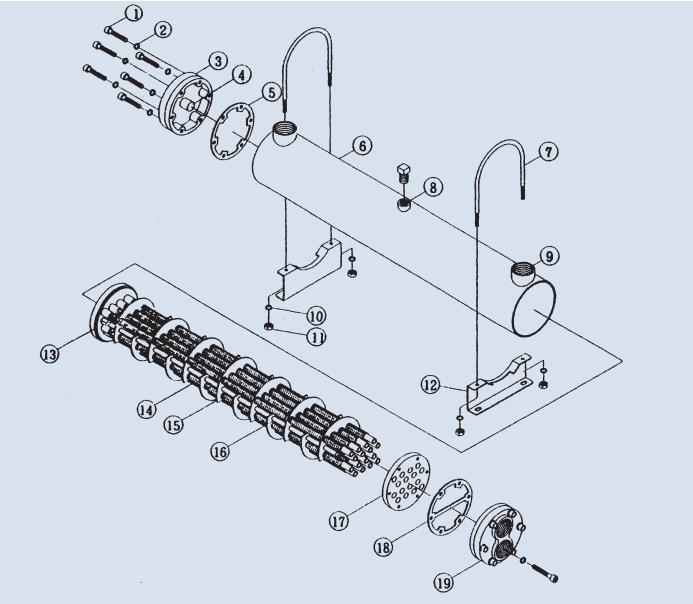

Item	Part name	Material
1	Socket cap screws	SCM (435)
2	Washers	SPM
3	Cast iron end cover	FC20
4	Anti-corrosion zinc bar	ZnB
5	Oil seal	NBR
6	Shell	BPE
7	Supporting hangers	AISI (1006)
8	Air vent	SS41
9	Oil port	STPG (370)
10	Vibration absorber	FWL
11	Nut	STEEL
12	Supporting legs	SS41
13	Tube end plate	SS41
14	Copper tubes	JIS (H3300) (1220T)
15	Buffle plates	SS41
16	Supporting rod	SS41
17	Tube bundle end plate	SS41
18	Oil seal	NBR
19	Cast Iron end cover	FC20

FIN TUBE TYPE OIL COOLER
NO-FIN TUBE TYPE OIL COOLER

Dimensions

Unit: mm

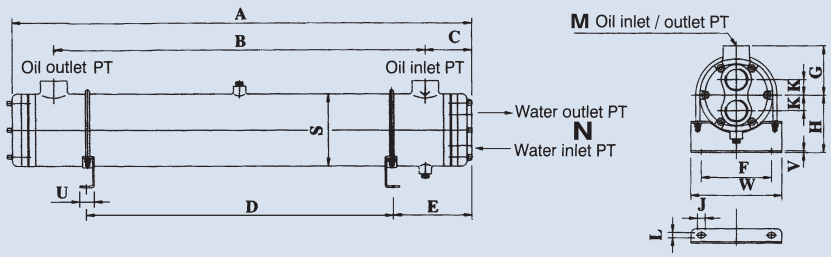

Model	A	B	C	D	E	F	J	G	H	K	L	M	N	S	U	V	W
HT,HH-0905	590	408	88	270	150	80	25	63	80	22	10	3/4"	3/4"	89.5	30	2.3	115
HT,HH-0908	880	720	78	500	190	80	25	63	80	22	10	3/4"	3/4"	89.5	30	2.3	115
HT,HH-1405	600	398	100	270	162	140	32	90	110	28	12	1-1/4"	1/1/4"	140.8	40	3.2	176
HT,HH-1408	890	710	85	500	202	140	32	90	110	28	12	1-1/4"	1-1/4"	140.8	40	3.2	176
HT,HH-1412	1310	1110	100	700	303	140	32	90	110	28	12	1-1/2"	1-1/4"	140.8	40	3.2	176
HT,HH-1712	1335	1060	138	700	310	145	32	115	125	32	12	2"	1-1/4"	166.5	40	3.2	200
HT,HH-1716	1745	1510	118	850	460	145	32	115	125	32	12	2"	1-1/4"	166.5	40	3.2	200
HT,HH-1722	2200	1850	160	1650	270	145	32	115	125	32	12	2	1-1/4"	166.5	40	3.2	200

Unit: mm

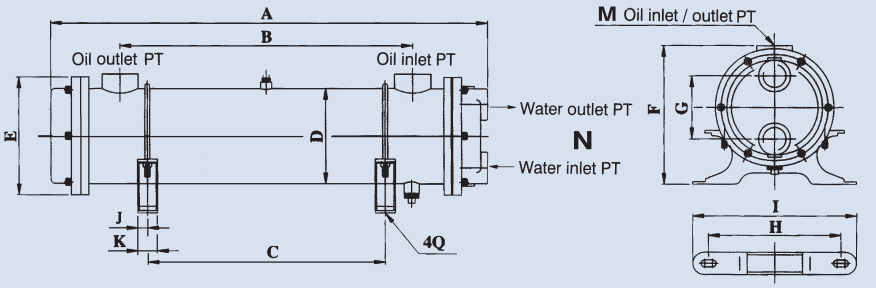

Model	A	B	C	D	E	F	G	H	I	J	K	M	N	Q
HTF,HHF-2208	950	640	ADJ.	219	265	323	137	290	360	38	50	2"~2-1/2"	1-1/2"~2"	5/8"
HTF,HHF-2212	1370	1060	ADJ.	219	265	323	-	-	-	-	-	2"~2-1/2"	1-1/2"~2"	5/8"
HTF,HHF-2216	1780	1490	ADJ.	219	265	323	-	-	-	-	-	2"~2-1/2"	1-1/2"~2"	5/8"
HTF,HHF-2222	2210	1860	ADJ.	219	265	323	-	-	-	-	-	2"~2-1/2"	1-1/2"~2"	5/8"
HTF,HHF-2508	980	640	ADJ.	270	325	385	160	345	405	38	50	2"~3"	2"	5/8"
HTF,HHF-2512	1400	1060	ADJ.	270	325	385	160	345	-	-	-	2"~3"	2"	5/8"
HTF,HHF-2516	1810	1470	ADJ.	270	325	385	160	345	-	-	-	2"~3"	2"	5/8"
HTF,HHF-2522	2240	1860	ADJ.	270	325	385	160	345	-	-	-	2"~3"	2"	5/8"

Unit: mm

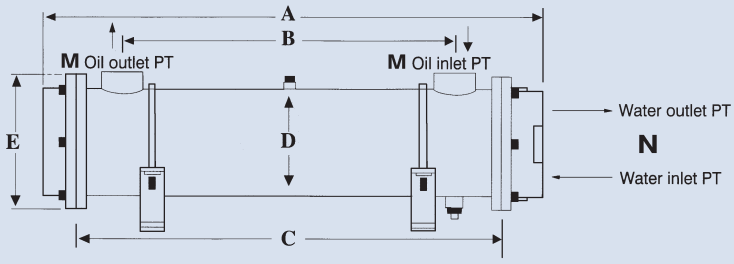

Model	A	B	C	D	E	M	N
HTF-3208	975	635	810	12"	390	3"~4"	3"~4"
HTF-3212	1400	1060	1235	12"	390	3"~4"	3"~4"
HTF-3216	1810	1470	1645	12"	390	3"~4"	3"~4"
HTF-3222	2235	1895	2070	12"	390	3"~4"	3"~4"

Model	A	B	C	D	E	M	N
HTF-3508	975	635	810	14"	448	3"~4"	3"~4"
HTF-3512	1400	1060	1235	14"	448	3"~4"	3"~4"
HTF-3516	1810	1470	1645	14"	448	3"~4"	3"~4"
HTF-3522	2235	1890	2070	14"	448	3"~4"	3"~4"

FIN TUBE TYPE OIL COOLER

Performance curves

Test conditions:
1. The flow rate of oil is twice as water
2. The outlet temperature of oil: 50 °C
3. The inlet temperature of water: 30 °C
4. The viscosity of oil: ISO-68 (68CST)

Pressure drop of oil:
Δ:ΔP=0.5 bar O: ΔP=1.0 bar X:ΔP=1.5 bar

HT-1405, HT-1408, HT-1412

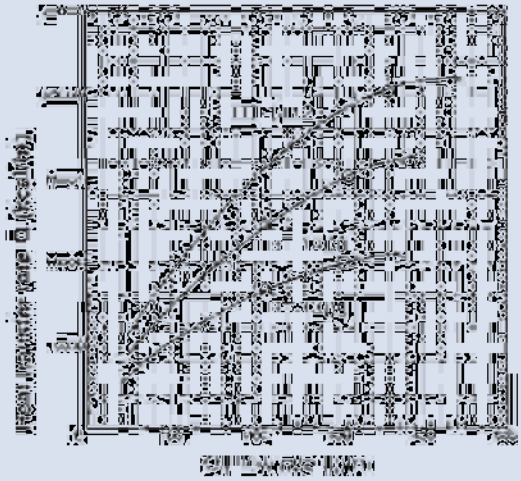

HT-1712, HT-1716

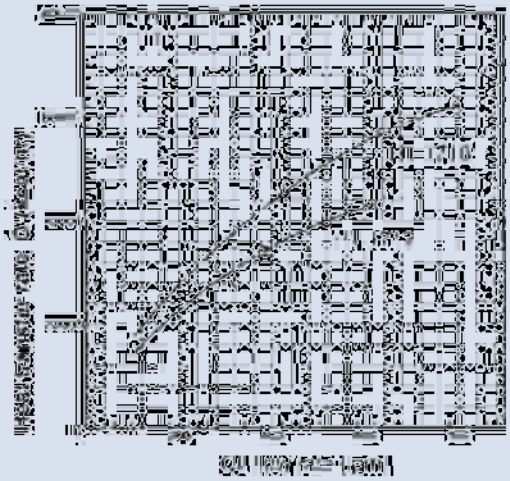

HTF-2208, HTF-2212, HTF-2216

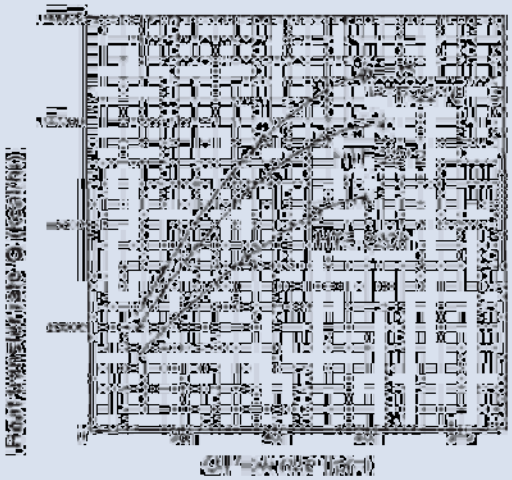

HTF-2512, HTF-2516, HTF-2522

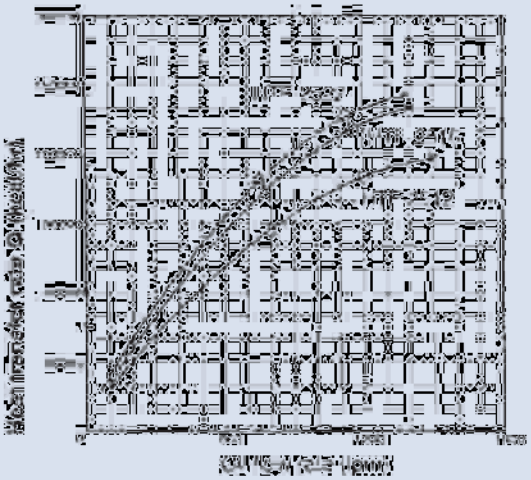

OIL TEMPERATURE CORRECTION

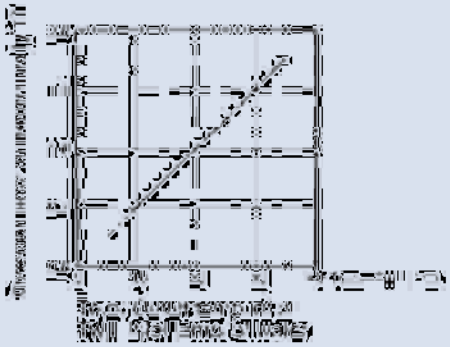

OIL VISCOSITY CORRECTION

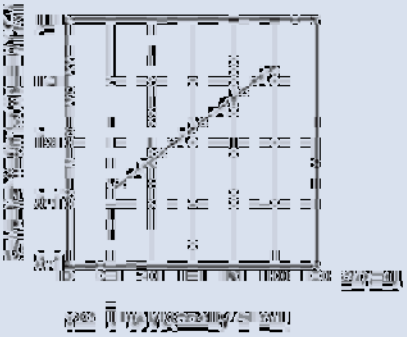

OIL FLOW CORRECTION

MULTI-TUBE TYPE OIL COOLER

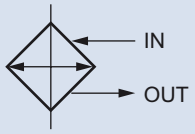

How to order

OR - 60
1 2

1	Model
2	Flow (lpm)

Specifications

Model	Heat Diffusion Area (m²)	Nos. of Tube	Flow (lpm)	Weight (kg)	Model	Heat Diffusion Area (m²)	Nos. of Tube	Flow (lpm)	Weight (kg)
OR-30	0.17	22	30	6.5	OR-800	2.9	58	800	48.6
OR-60	0.3	22	60	7.7	OR-1000	3.7	58	1000	57.4
OR-100	0.4	26	100	10.2	OR-1200	6.1	124	1200	103
OR-150	0.63	42	150	17.5	OR-1400	6.9	124	1400	111
OR-250	1.26	58	250	22.10	OR-1800	8.1	124	1800	118
OR-350	1.75	58	350	29.80	OR-2500	10.1	200	2500	160
OR-600	2	58	600	36.8	OR-3000	12.56	200	3000	200

Dimensions

Unit: mm

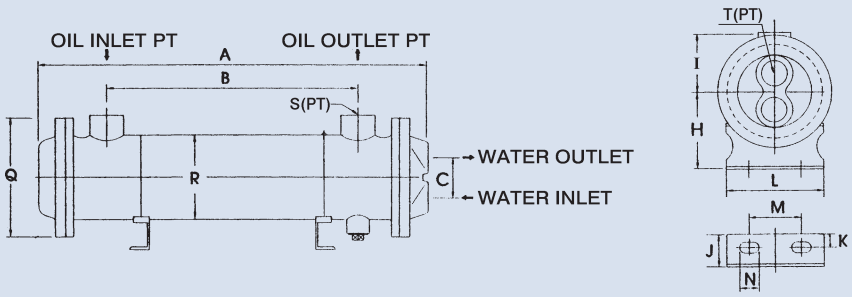

Model	A	B	C	H	I	J	K	L	M	N	Q	R	S	T
OR-30	299	150	46	77	63	23	11	115.5	95	7x10	121	89.1	3/4"	3/4"
60	450	305												
100	555	403	57	95	70	33	12.5	145.5	106.5	10x20	134	101.6	3/4"	3/4"
150	575	385	76	118	95	30	12.5	175	130	13x16	175	139.8	1-1/4"	1"
250	780	585												
350	1180	990												
600	1175	950	87	136	107	34	12.5	205	161	13x16	207	165.2	2"	1-1/4"
800	1700	1490												
1000	2135	1910												
1200	1690	1380	114	184	150	50	25	333	229	16x33	269	217	2-1/2"	2"
1400	1840	1530												
1800	2150	1840												
2500	1815	1435	154	218	178	50	25	352	247	16x33	302	273	3"	2"
3000	2150	1800												

THREADED-TUBE TYPE OIL COOLER

Dimensions

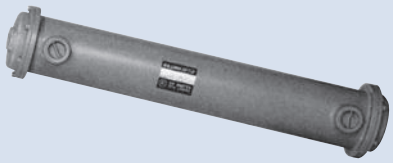

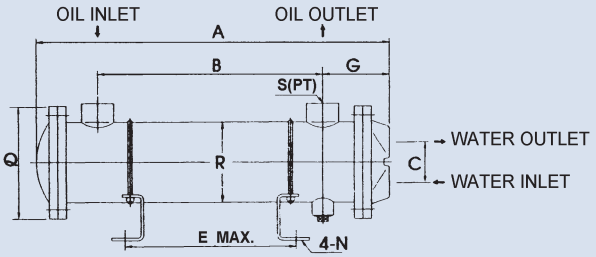

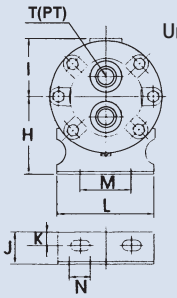

Unit: mm

Model	A	B	C	E	G	H	I	J	K	L	M	N	Q	R	S	T	H.D.A m²	Flow(lpm)	Weight(kg)
ST-303	300	150		100													0.3	50	6.5
304	390	225		175			63								3/4"		0.4	60	7.5
305	450	305	46	235	90	77		23	11	115.5	95	7x10	121	89.1		3/4"	0.5	70	9.0
307	600	440		380													0.7	110	10.5
309	755	584		525			66								1"		0.9	130	12.0
311	900	728		675													1.1	150	13.5
ST-408	470	284		215													0.8	130	14
411	610	428		360													1.1	140	16
415	765	572	70	500	102	103	77	33	12.5	145.5	106.5	10x20	150	114.3	1-1/4"	1"	1.5	150	18
418	910	716		650													1.8	160	21
421	1050	860		790													2.1	180	22
ST-518	615	406		328													1.8	210	21
522	770	558		480													2.2	260	26
526	820	622	76	540	110	118	95	30	12.5	175	130	13x16	174.8	139.8	1-1/2"	1"	2.6	300	28
530	915	702		620													3	330	30
534	1075	838		760													3.4	370	33
542	1255	1055		975													4.2	410	37
ST-649	1090	836		735													4.9	600	47
657	1275	1000	98	900	134	136	107	34	12.5	205	161	13x16	207	165.2	2"	1-1/4"	5.7	800	53
668	1475	1218		1120													6.8	1000	60
682	1745	1490		1390													8.2	1200	67

Performance curves

Test condition:
1. The flow rate of water: 20 lpm
2. The inlet temperature of oil: 55 °C
3. The inlet temperature of water: 28 °C
4. The viscosity of oil: ISO-68 cst

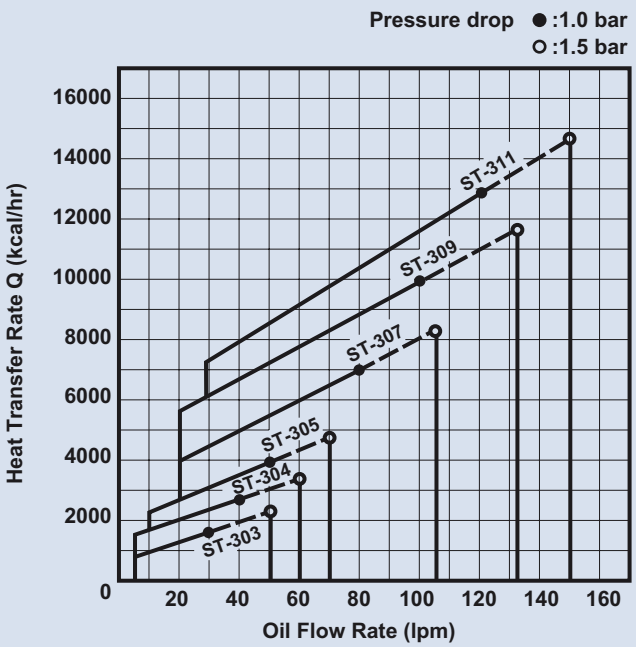

THREADED-TUBE TYPE OIL COOLER

Performance curves

Test condition:
1. The flow rate of water: 40 lpm
2. The inlet temperature of oil: 55 °C
3. The inlet temperature of water: 28 °C
4. The viscosity of oil: ISO-68 cst

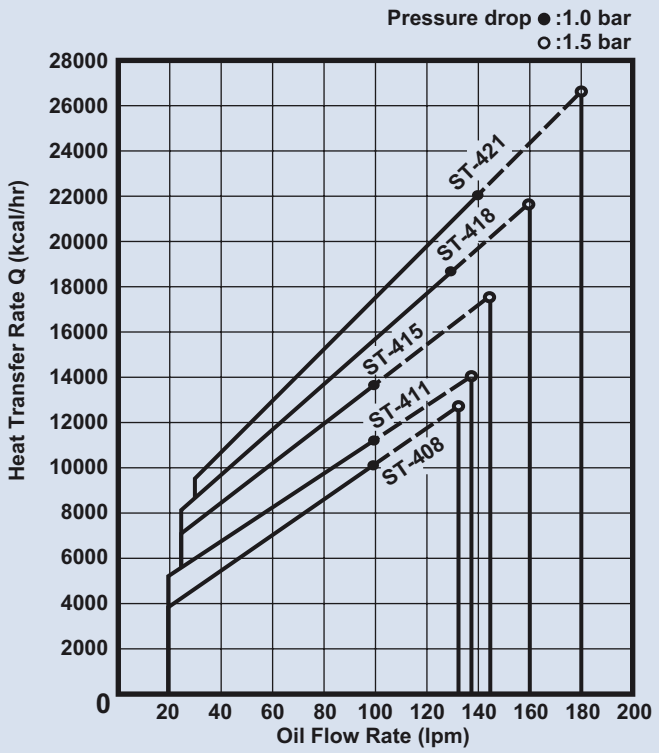

Test condition:
1. The flow rate of water: 50 lpm
2. The inlet temperature of oil: 55 °C
3. The inlet temperature of water: 28 °C
4. The viscosity of oil: ISO-68 cst

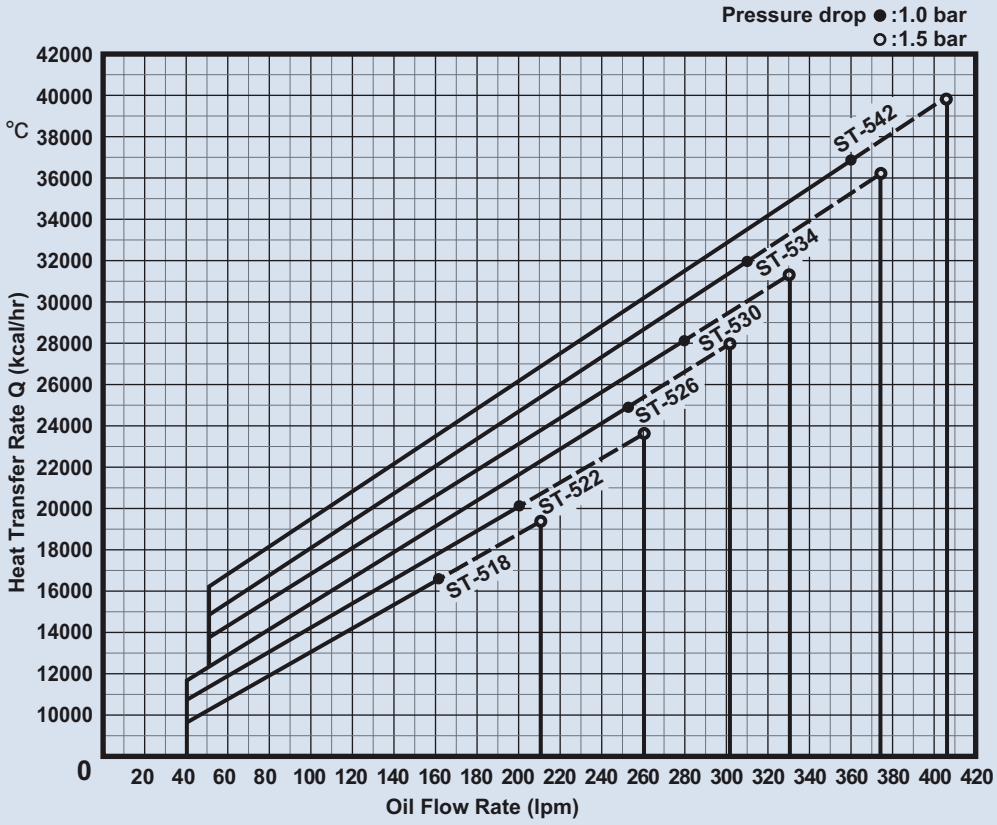

PLATE-FIN HEAT EXCHANGER

To avoid the leakage caused by peak pressure, an Anti-Burst Valve or By-Pass Valve should be always mounted. Off-Line cooling is strongly recommended. Pumping the oil from the tank to the heat exchanger with a separated cooling pump. Please refer to page 218.

How to order

AH0608T - C A(D)※

1 2 3

1	Model	Fan dia: 6"x1 with temperature protection switch
2	With fan case	
3	Voltage	A1: AC115V A2: AC230V A3: AC380V D1: DC12V D2: DC24V

Specifications

Model	Port Size (PT)	Oil Flow (lpm)	Max. Pressure (bar)	Capacity kcal/h (Δt=30 °C)	Hydraulic System (HP)	Weight (kg)
AH0608T	3/4"	3~60	20	1200	1~2	4.2

Motor Phase	Motor IP	Voltage (V)	Frequency (Hz)	Power (W)	Current (A)	Rated Speed (r.p.m)	Air Flow m³/h	Noise dB (A)
Single	54	AC115	50/60	45/37	0.6/0.5	2850/3450	457/553	42/48
		AC230			0.27/0.23			
		AC380		30/25	0.16/0.14			
-	-	DC12	-	-	1.6	3350	500	51
		DC24			0.8		420	

Dimensions

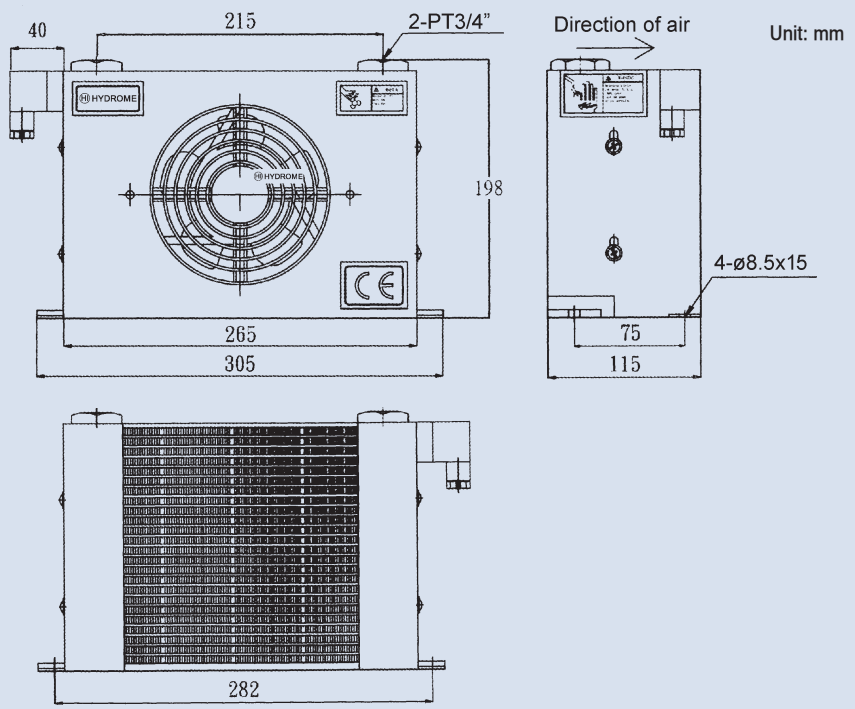

PERFORMANCE DIAGRAM

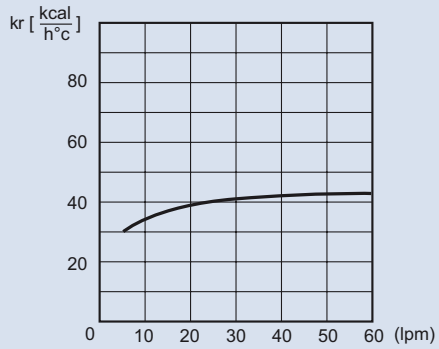

LOSS OF PRESSURE (at 32 Cst)

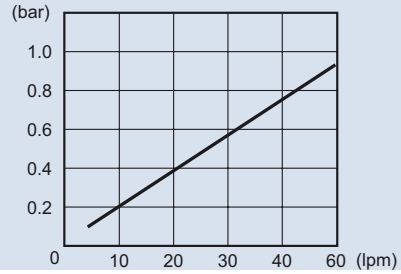

PLATE-FIN HEAT EXCHANGER

To avoid the leakage caused by peak pressure, an Anti-Burst Valve or By-Pass Valve should be always mounted. Off-Line cooling is strongly recommended. Pumping the oil from the tank to the heat exchanger with a separated cooling pump. Please refer to page 218.

How to order

AH0608LT - C A(D)※

1 2 3

1	Model	Fan dia: 6"x2 with temperature protection switch
2	With fan case	
3	Voltage	A1: AC115V A2: AC230V A3: AC380V D1: DC12V D2: DC24V

Specifications

Model	Port Size (PT)	Oil Flow (lpm)	Max. Pressure (bar)	Capacity kcal/h (Δt=30 °C)	Hydraulic System (HP)	Weight (kg)
AH0608LT	3/4"	3~60	20	2400	2~3	6

Motor Phase	Motor IP	Voltage (V)	Frequency (Hz)	Power (W)	Current (A)	Rated Speed (r.p.m)	Air Flow m³/h	Noise dB (A)
Single	54	AC115	50/60	90/74	1.2/1	2850/3450	914/1106	42/48
		AC230			0.54/0.46			
		AC380		60/50	0.32/0.28			
-	-	DC12	-	-	3.2	3350	1000	51
		DC24			1.6		840	

Dimensions

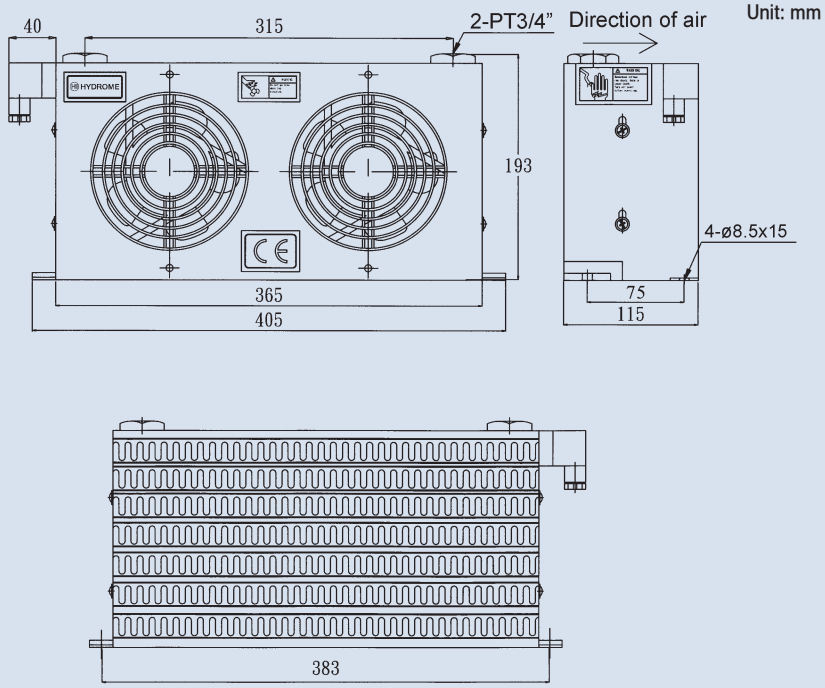

PERFORMANCE DIAGRAM

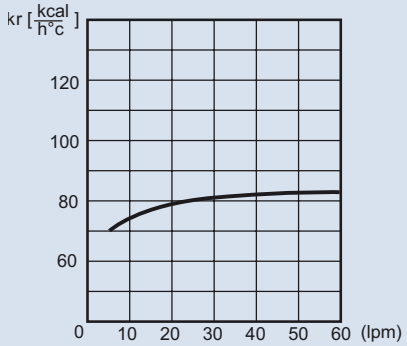

LOSS OF PRESSURE (at 32 Cst)

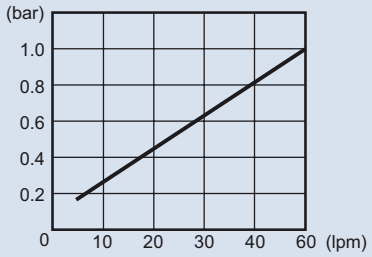

PLATE-FIN HEAT EXCHANGER

To avoid the leakage caused by peak pressure, an Anti-Burst Valve or By-Pass Valve should be always mounted. Off-Line cooling is strongly recommended. Pumping the oil from the tank to the heat echanger with a separated cooling pump. Please refer to page 218.

The motor of DC fan is carbon brush type, which means the life-span was limited 2000 hours of service.

How to order

AH1012 - (3P) - C A(D)※

1 2 3 4

1	Model Fan dia: 10"x1
2	3P: 3 Phase double voltage 230 (400V)
3	With fan case
4	Voltage A1: AC115V A2: AC230V D1: DC12V D2: DC24V

Specifications

Model	Port Size (PT)	Oil Flow (lpm)	Max. Pressure (bar)	Capacity kcal/h (Δt=30 °C)	Hydraulic System (HP)	Weight (kg)
AH1012/AH1012-3P	1"	20~100	20	5000/5200	3~5	10

Model	Motor		Voltage (V)	Frequency (Hz)	Power (W)	Current (A)	Rated Speed (r.p.m)	Air Flow m³/h	Noise dB (A)
	Phase	IP							
AH1012	Single	54	AC115	50/60	60/58	0.8/0.74	1300/1550	1500	55
			AC230			0.42/0.36			
	-	-	DC12	-	192	16	2000		60
			DC24			8	2400		
AH1012-3P	3	54	AC230	50/60	88/80	0.45/0.36	1430/1670		
			AC400			0.22/0.2			

Dimensions

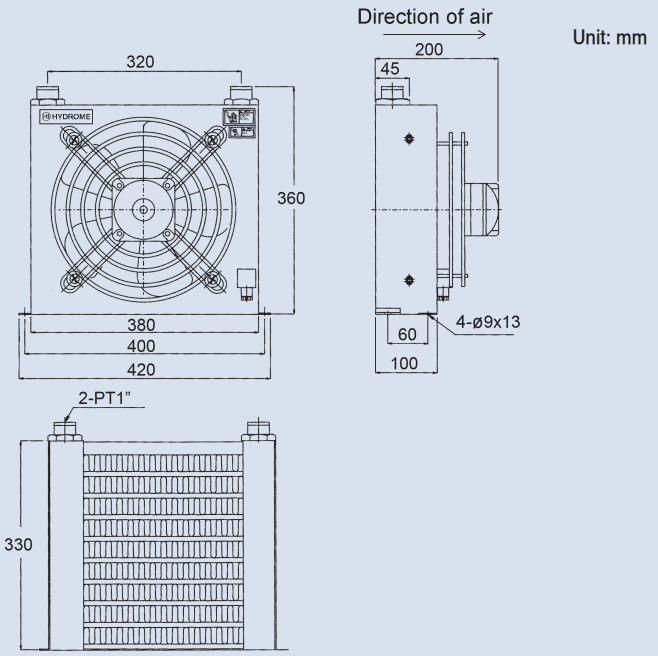

PERFORMANCE DIAGRAM

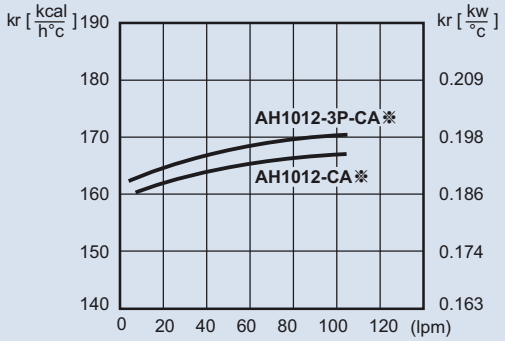

LOSS OF PRESSURE (at 32 Cst)

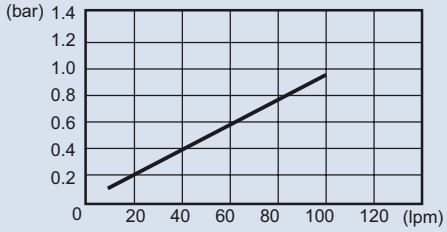

PLATE-FIN HEAT EXCHANGER

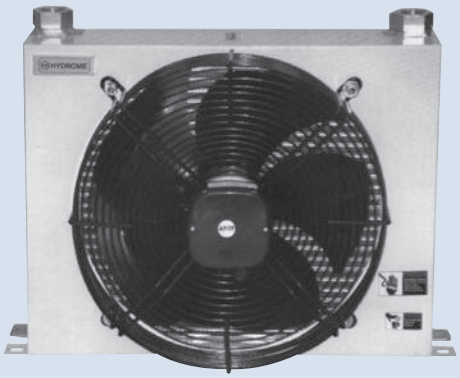

To avoid the leakage caused by peak pressure, an Anti-Burst Valve or By-Pass Valve should be always mounted. Off-Line cooling is strongly recommended. Pumping the oil from the tank to the heat exchanger with a separated cooling pump. Please refer to page 218.

The motor of DC fan is carbon brush type, which means the life-span was limited 2000 hours of service.

How to order

AH1215 - C A(D)※

1 2 3

1	Model Fan dia: 12"x1
2	With fan case
3	Voltage A2: 230 (400V) D1: DC12V D2: DC24V

Specifications

Model	Port Size (PT)	Oil Flow (lpm)	Max. Pressure (bar)	Capacity kcal/h (Δt=30 °C)	Hydraulic System (HP)	Weight (kg)
AH1215	1"	20~100	20	7200	5~7.5	15

Motor Phase	Motor IP	Voltage (V)	Frequency (Hz)	Power (W)	Current (A)	Rated Speed (r.p.m)	Air Flow m³/h	Noise dB (A)
3	54	AC230	50/60	130	0.45/0.5	2420/2510	1800/1900	60
		AC400			0.26/0.29			
-	-	DC12	-	192	16	2000	2000	65
		DC24			8	2400		

Dimensions

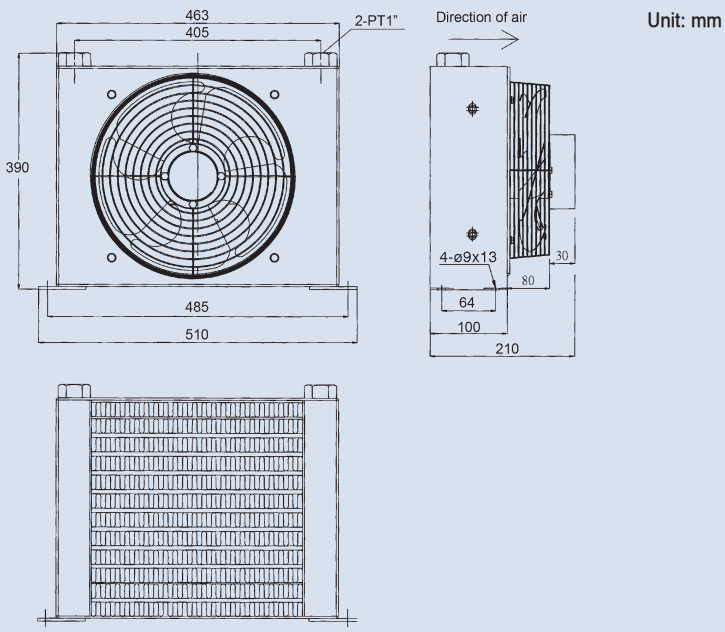

PERFORMANCE DIAGRAM

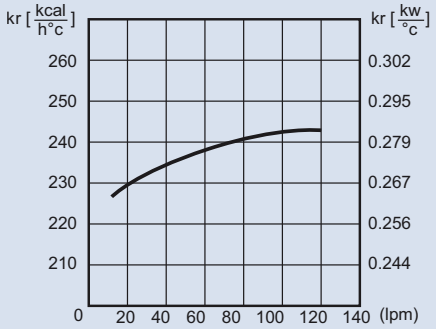

LOSS OF PRESSURE (at 32 Cst)

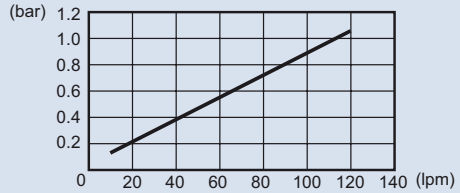

PLATE-FIN HEAT EXCHANGER

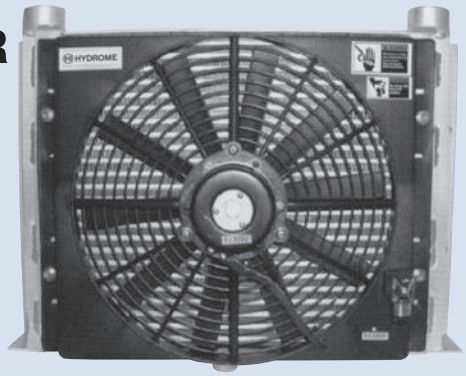

To avoid the leakage caused by peak pressure, an Anti-Burst Valve or By-Pass Valve should be always mounted. Off-Line cooling is strongly recommended. Pumping the oil from the tank to the heat exchanger with a separated cooling pump. Please refer to page 218.

The motor of DC fan is carbon brush type, which means the life-span was limited 2000 hours of service.

How to order

AH14 17, AH14 70 - A(D)※

1 2 1 2 3

1	Model	Fan dia: 14"x1			
2	Size of A	17: 45mm	70: 70mm		
3	Voltage	A1: AC115V	A2: AC230V	D1: DC12V	D2: DC24V

Specifications

Model	Port Size (PT)	Oil Flow (lpm)	Max. Pressure (bar)	Capacity kcal/h (Δt=30 °C)	Hydraulic System (HP)	Weight (kg)
AH1417/AH1470	See B	30~100	20	10000/11300	7.5~10/10~15	11/17

Model	Motor		Voltage (V)	Frequency (Hz)	Power (W)	Current (A)	Rated Speed (r.p.m)	Air Flow m³/h	Noise dB (A)
	Phase	IP							
AH1417	Single	54	AC115	50/60	40/50	0.46/0.35	1450/1650	2300/2760	60
			AC230			0.23/0.18			
AH1470	-	-	DC12	-	90	7.5	2000	2800	
			DC24		108	4.5	2200		

Dimensions

Unit: mm

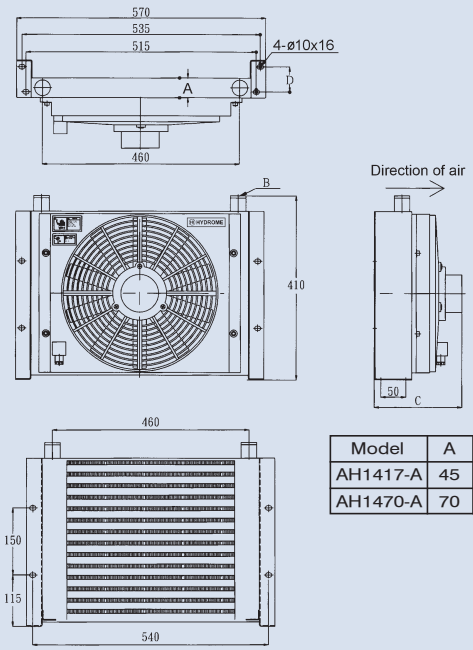

Model	A	B	C	D
AH1417-A	45	2-PT1"	196	48
AH1470-A	70	2-PT1-1/4"	212	50

PERFORMANCE DIAGRAM

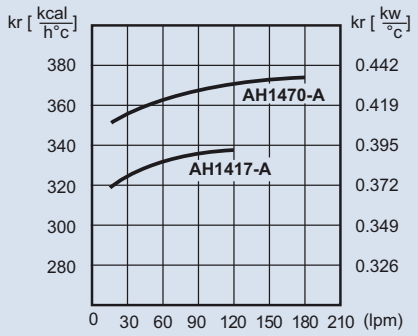

LOSS OF PRESSURE (at 32 Cst)

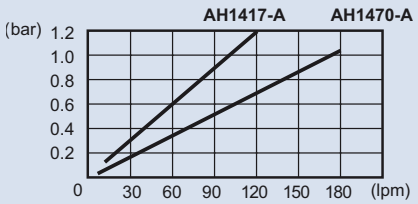

PLATE-FIN HEAT EXCHANGER

To avoid the leakage caused by peak pressure, an Anti-Burst Valve or By-Pass Valve should be always mounted. Off-Line cooling is strongly recommended. Pumping the oil from the tank to the heat exchanger with a separated cooling pump. Pease refer to page 218.

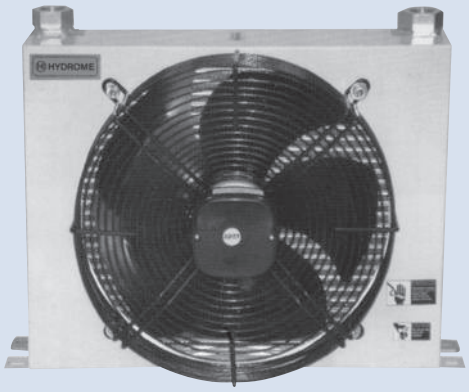

How to order

AH1418 - C A※

1 2 3

1	Model Fan dia: 14"x1
2	With fan case
3	Voltage A2: AC230 / 400V A4: AC440V

Specifications

Model	Port Size (PT)	Oil Flow (lpm)	Max. Pressure (bar)	Capacity kcal/h (Δt=30 °C)	Hydraulic System (HP)	Weight (kg)
AH1418	1"	30~100	20	10000	7.5~10	17

Model	Motor Phase	Motor IP	Voltage (V)	Frequency (Hz)	Power (W)	Current (A)	Rated Speed (r.p.m)	Air Flow m³/h	Noise dB (A)
AH1418	3	54	AC230	50/60	150/180	0.8/0.7	1380/1550	3200/3800	62
			AC400		150/180	0.4/0.36			
			AC440		200/260	0.4/0.43			

Dimensions

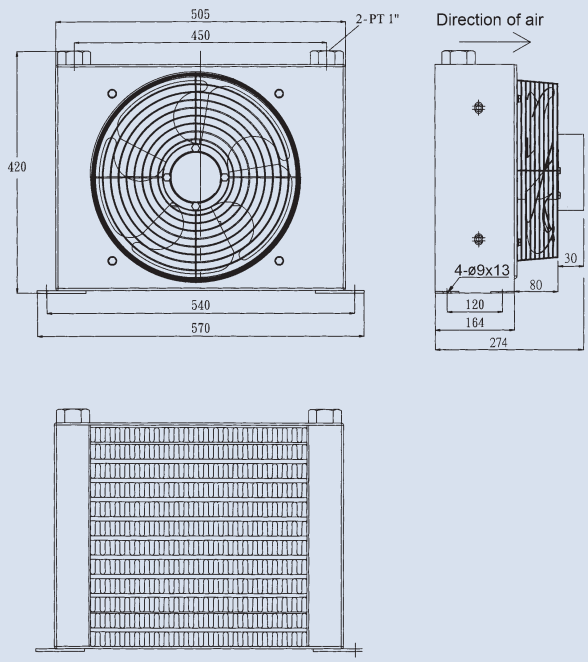

Unit: mm

PERFORMANCE DIAGRAM

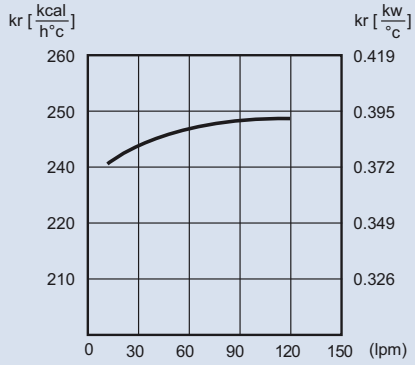

LOSS OF PRESSURE (at 32 Cst)

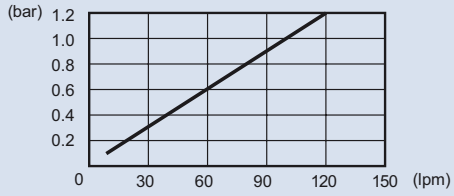

PLATE-FIN HEAT EXCHANGER

To avoid the leakage caused by peak pressure, an Anti-Burst Valve or By-Pass Valve should be always mounted. Off-Line cooling is strongly recommended. Pumping the oil from the tank to the heat exchanger with a separated cooling pump. Please refer to page 218.

How to order

AH1428 - C A※

1 2 3

1	Model Fan dia: 14"x1
2	With fan case
3	Voltage A2: AC230 / 400V A4: AC440V

Specifications

Model	Port Size (PT)	Oil Flow (lpm)	Max. Pressure (bar)	Capacity kcal/h (Δt=30 °C)	Hydraulic System (HP)	Weight (kg)
AH1428	1-1/4"	30~200	20	13000	15~20	21

Motor Phase	Motor IP	Voltage (V)	Frequency (Hz)	Power (W)	Current (A)	Rated Speed (r.p.m)	Air Flow m³/h	Noise dB (A)
3	54	AC230	50/60	150/180	0.8/0.7	1380/1550	3200/3800	62
		AC400		150/180	0.4/0.36			
		AC440		200/260	0.4/0.43			

Dimensions

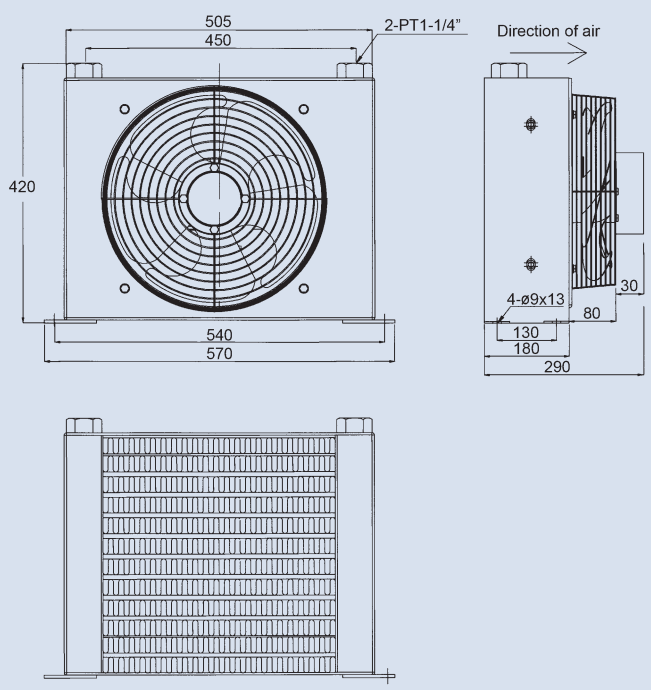

PERFORMANCE DIAGRAM

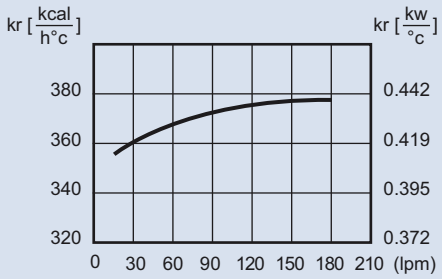

LOSS OF PRESSURE (at 32 Cst)

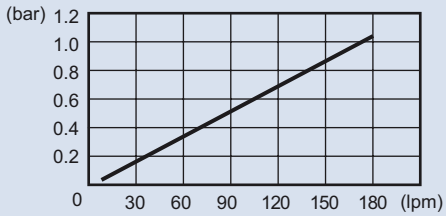

PLATE-FIN HEAT EXCHANGER

To avoid the leakage caused by peak pressure, an Anti-Burst Valve or By-Pass Valve should be always mounted. Off-Line cooling is strongly recommended. Pumping the oil from the tank to the heat exchanger with a separated cooling pump. Please refer to page 218.

The motor of DC fan is carbon brush type, which means the life-span was limited 2000 hours of service.

How to order

AH1490 - C A(D)※

1 2 3

1	Model Fan dia: 14"x1
2	With fan case
3	Voltage A2: AC230 / 400V A4: AC440V D1: DC12V D2: DC24V

Specifications

Model	Port Size (PT)	Oil Flow (lpm)	Max. Pressure (bar)	Capacity kcal/h (Δt=30 °C)	Hydraulic System (HP)	Weight (kg)
AH1490	1-1/2"	30~200	20	18000	20~25	30

Motor		Voltage (V)	Frequency (Hz)	Power (W)	Current (A)	Rated Speed (r.p.m)	Air Flow m³/h	Noise dB (A)
Phase	IP							
3	54	AC230	50/60	150/180	0.8/0.7	1380/1550	3200/3800	62
		AC400		150/180	0.4/0.36			
		AC440		200/260	0.4/0.43			

Dimensions

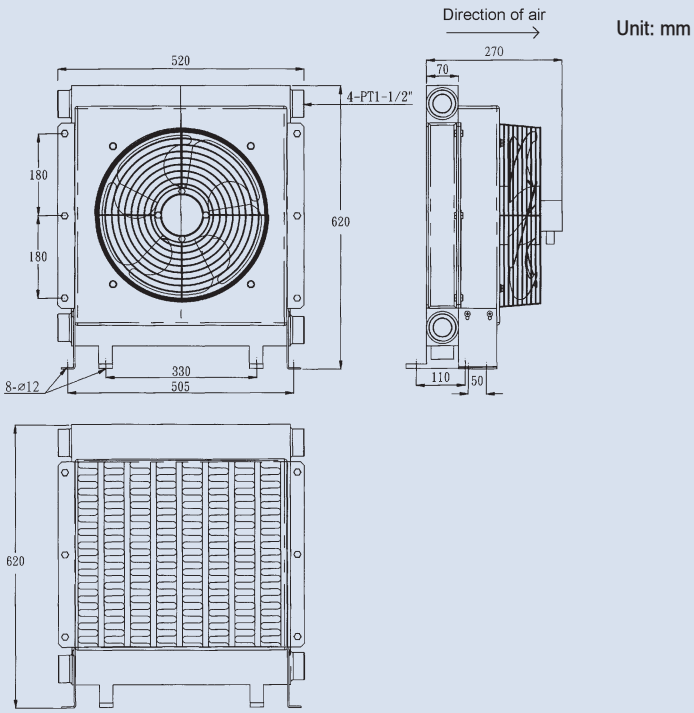

PERFORMANCE DIAGRAM

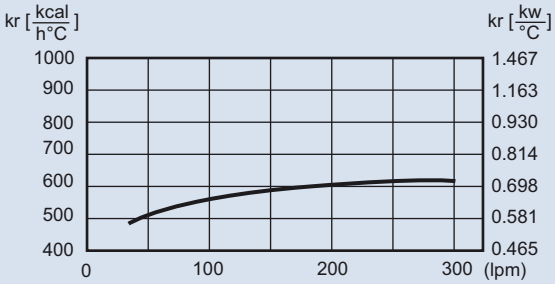

LOSS OF PRESSURE (at 32 Cst)

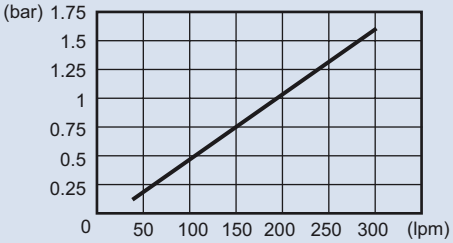

PLATE-FIN HEAT EXCHANGER

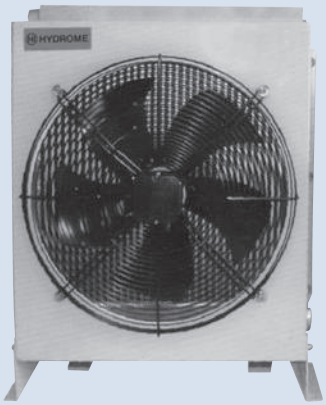

To avoid the leakage caused by peak pressure, an Anti-Burst Valve or By-Pass Valve should be always mounted. Off-Line cooling is strongly recommended. Pumping the oil from the tank to the heat exchanger with a separated cooling pump. Please refer to page 218.

The motor of DC fan is carbon brush type, which means the life-span was limited 2000 hours of service.

How to order

AH1680 - C A(D)※

1 2 3

1	Model Fan dia: 16"x1
2	With fan case
3	Voltage A2: AC230 / 400V A4: AC440V D1: DC12V D2: DC24V

Specifications

Model	Port Size (PT)	Oil Flow (lpm)	Max. Pressure (bar)	Capacity kcal/h (Δt=30 °C)	Hydraulic System (HP)	Weight (kg)
AH1680	1-1/2"	30~250	20	22000	25~40	35

Motor		Voltage (V)	Frequency (Hz)	Power (W)	Current (A)	Rated Speed (r.p.m)	Air Flow m³/h	Noise dB (A)
Phase	IP							
3	54	AC230	50/60	145/250	0.90/1.00	1380/1550	4000/4800	68
		AC400		145/250	0.50/0.52			
		AC440		135/175	0.42/0.45			

Dimensions

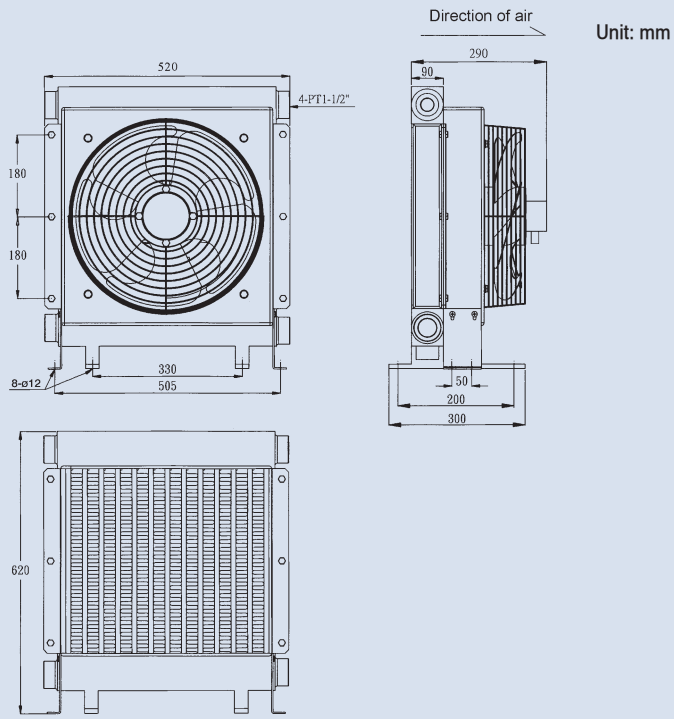

PERFORMANCE DIAGRAM

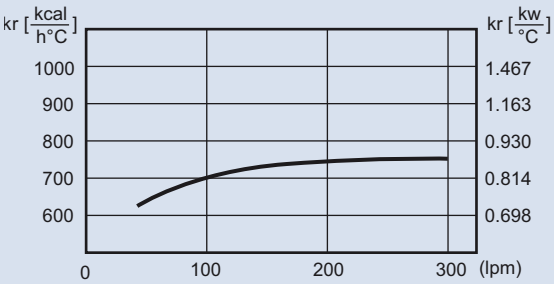

LOSS OF PRESSURE (at 32 Cst)

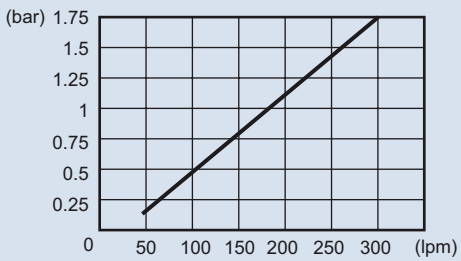

PLATE-FIN HEAT EXCHANGER

To avoid the leakage caused by peak pressure, an Anti-Burst Valve or By-Pass Valve should be always mounted. Off-Line cooling is strongly recommended. Pumping the oil from the tank to the heat exchanger with a separated cooling pump. Please refer to page 218.

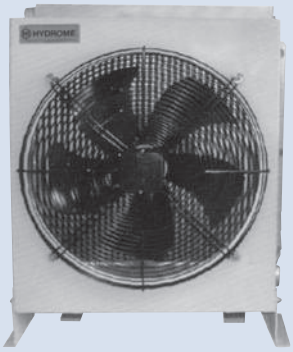

How to order

AH1890 - C A※

1 2 3

1	Model Fan dia: 18"x1
2	With fan case
3	Voltage A2: AC230 / 400V A4: AC440V

Specifications

Model	Port Size (PT)	Oil Flow (lpm)	Max. Pressure (bar)	Capacity kcal/h (Δt=30 °C)	Hydraulic System (HP)	Weight (kg)
AH1890	1-1/2"	30~250	20	26000	30~50	52

Motor		Voltage (V)	Frequency (Hz)	Power (W)	Current (A)	Rated Speed (r.p.m)	Air Flow m³/h	Noise dB (A)
Phase	IP							
3	54	AC230	50/60	250/350	1.10/1.20	1380/1550	5200/6200	72
		AC400		250/350	0.65/0.70			
		AC440		210/300	0.45/0.51			

Dimensions

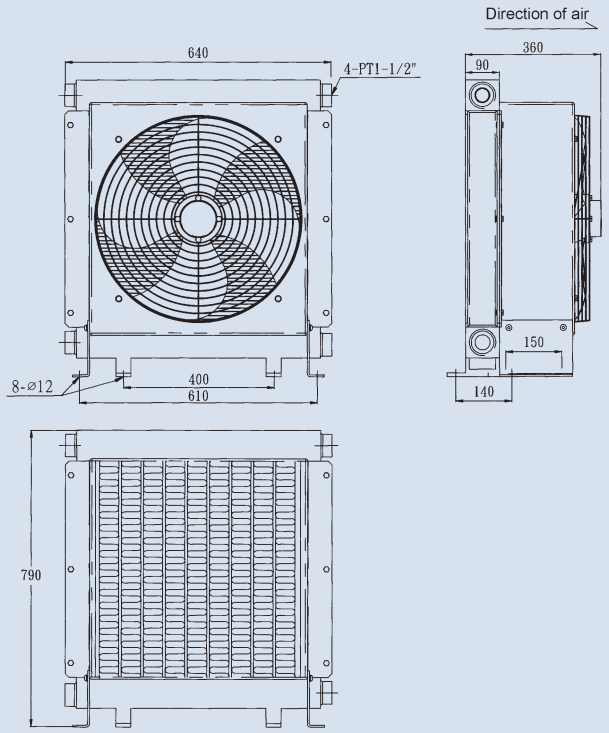

PERFORMANCE DIAGRAM

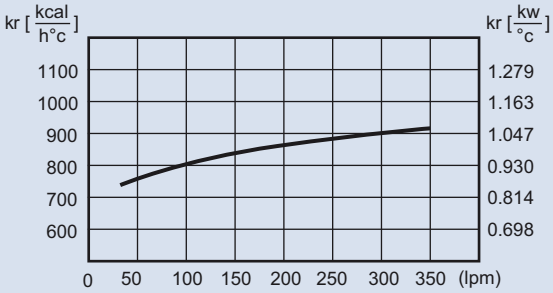

LOSS OF PRESSURE (at 32 Cst)

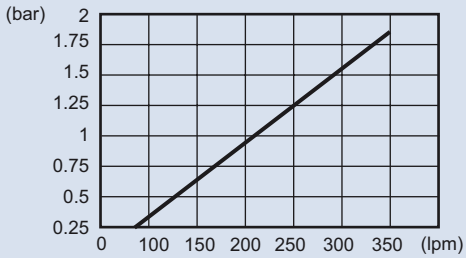

PLATE-FIN HEAT EXCHANGER

To avoid the leakage caused by peak pressure, an Anti-Burst Valve or By-Pass Valve should be always mounted. Off-Line cooling is strongly recommended. Pumping the oil from the tank to the heat exchanger with a separated cooling pump. Please refer to page 218.

How to order

AH2342 - C A※

1 2 3

1	Model	Fan dia: 23"x1
2	With fan case	
3	Voltage	AC210~230 / 360~400 (50Hz) AC240~270 / 420~460 (60Hz)

Specifications

Model	Port Size (PT)	Oil Flow (lpm)	Max. Pressure (bar)	Capacity kcal/h (Δt=30 °C)	Hydraulic System (HP)	Weight (kg)
AH2342	1-1/2"	50~250	20	37000	50~75	80

Motor		Voltage (V)	Frequency (Hz)	Power (W)	Current (A)	Rated Speed (r.p.m)	Air Flow m³/h	Noise dB (A)
Phase	IP							
3	55	AC210~230 / 360~400	50	1500	6.2~6.3 / 2.6~3.8	1400	7600	90
		AC240~270 / 420~460	60	17500	6.2~6.3 / 2.6~3.8	1680	9120	

Dimensions

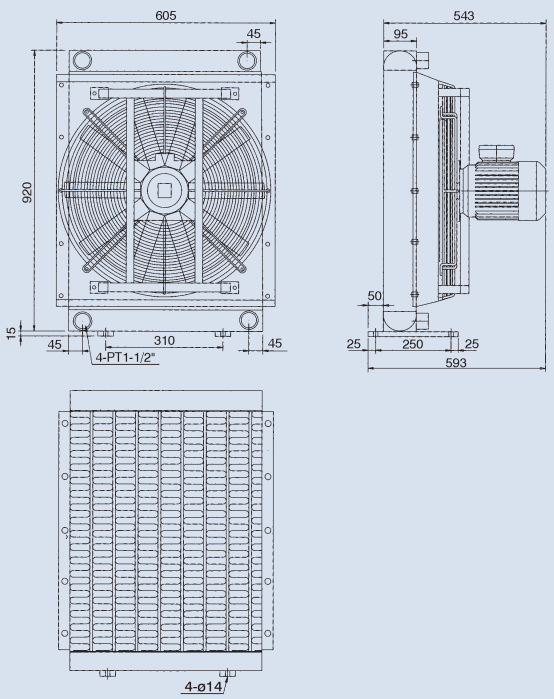

Unit: mm

PERFORMANCE DIAGRAM

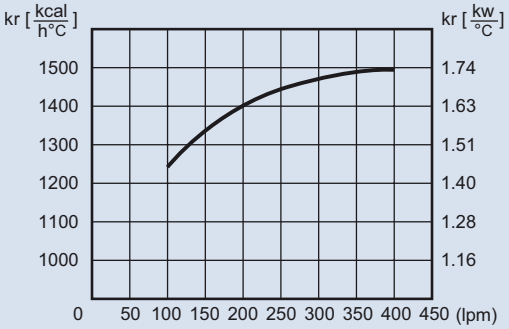

LOSS OF PRESSURE (at 32 Cst)

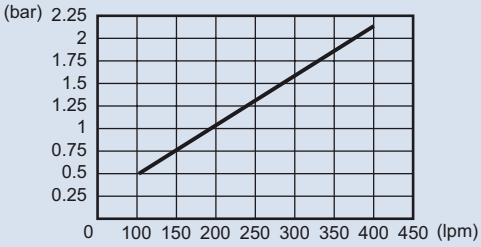

PLATE-FIN HEAT EXCHANGER

Suitable for the drain port in high-pressure variable piston pump and vane pump. Or off-line circuit.

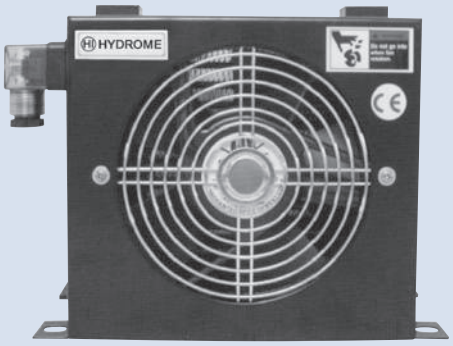

How to order

AW0607 - C A(D)※

1 2 3

1	Model	Fan dia: 6"x1 with temperature protection switch
2	With fan case	
3	Voltage	A1: AC115V A2: AC230V A3: AC380V D1: DC12V D2: DC24V

Specifications

Model	Port Size (PT)	Oil Flow (lpm)	Max. Pressure (bar)	Capacity kcal/h (Δt=30 °C)	Weight (kg)
AW0607	1/2"	1~20	15	800	3.3

Motor Phase	Motor IP	Voltage (V)	Frequency (Hz)	Power (W)	Current (A)	Rated Speed (r.p.m)	Air Flow m³/h	Noise dB (A)
Single	54	AC115	50/60	45/37	0.6/0.5	2850/3450	457/553	42/48
		AC230			0.27/0.23			
		AC380		30/25	0.16/0.14			
-	-	DC12	-	19.2	1.6	3350	500	51
		DC24			0.8		420	

Dimensions

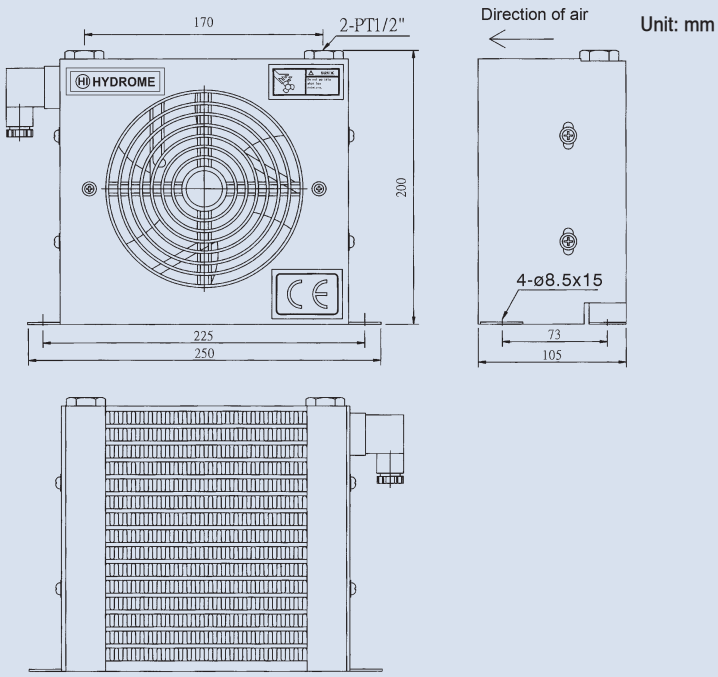

PERFORMANCE DIAGRAM

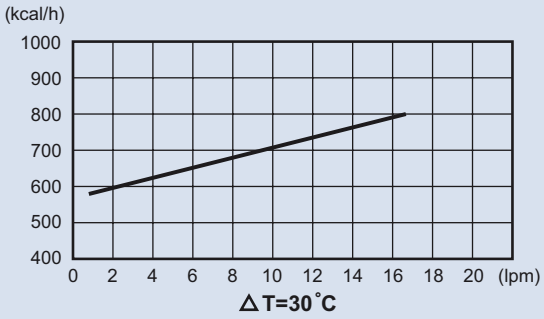

LOSS OF PRESSURE (at 32 Cst)

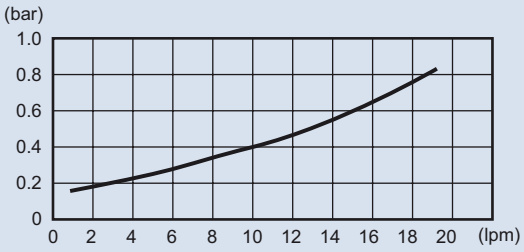

PLATE-FIN HEAT EXCHANGER

Suitable for the drain port in high-pressure variable piston pump and vane pump. Or off-line circuit.

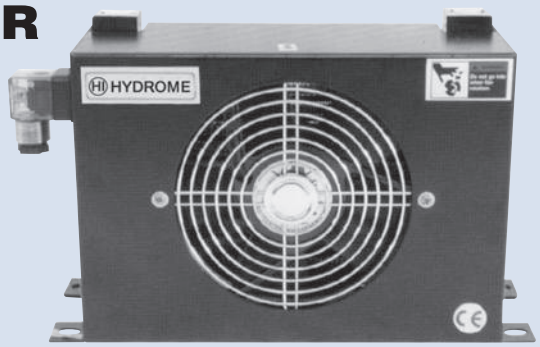

How to order

AW0608 - C A(D)※

1 2 3

1	Model	Fan dia: 6"x1 with temperature protection switch
2	With fan case	
3	Voltage	A1: AC115V A2: AC230V A3: AC380V D1: DC12V D2: DC24V

Specifications

Model	Port Size (PT)	Oil Flow (lpm)	Max. Pressure (bar)	Capacity kcal/h (Δt=30 °C)	Weight (kg)
AW0608	1/2"	1~20	15	900	3.7

Motor Phase	Motor IP	Voltage (V)	Frequency (Hz)	Power (W)	Current (A)	Rated Speed (r.p.m)	Air Flow m³/h	Noise dB (A)
Single	54	AC115	50/60	45/37	0.6/0.5	2850/3450	457/553	42/48
		AC230			0.27/0.23			
		AC380		30/25	0.16/0.14			
-	-	DC12	-	19.2	1.6	3350	500	51
		DC24			0.8		420	

Dimensions

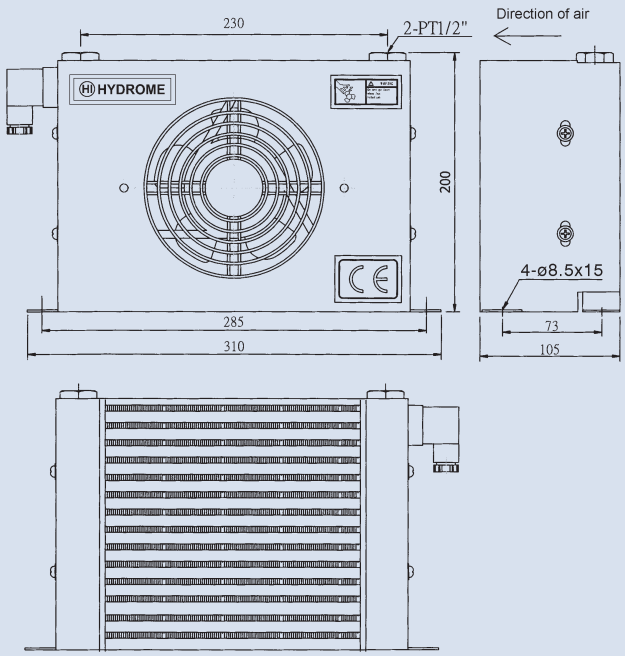

PERFORMANCE DIAGRAM

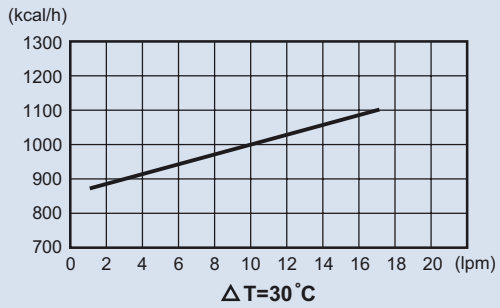

LOSS OF PRESSURE (at 32 Cst)

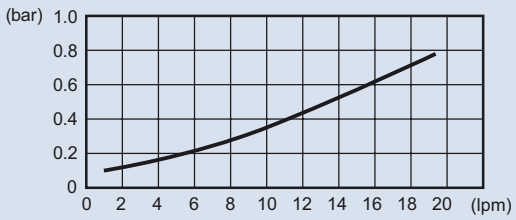

PLATE-FIN HEAT EXCHANGER

Suitable for the drain port in high-pressure variable piston pump and vane pump. Or off-line circuit.

How to order

AW0608L - C A(D)※

1 2 3

1	Model	Fan dia: 6"x2 with temperature protection switch
2	With fan case	
3	Voltage	A1: AC115V A2: AC230V A3: AC380V D1: DC12V D2: DC24V

Specifications

Model	Port Size (PT)	Oil Flow (lpm)	Max. Pressure (bar)	Capacity kcal/h (Δt=30 °C)	Weight (kg)
AW0608L	1/2"	1~20	15	1550	5.2

Motor Phase	Motor IP	Voltage (V)	Frequency (Hz)	Power (W)	Current (A)	Rated Speed (r.p.m)	Air Flow m³/h	Noise dB (A)
Single	54	AC115	50/60	90/74	1.2/1	2580/3450	914/1106	42/48
		AC230			0.54/0.46			
		AC380		60/50	0.32/0.28			
-	-	DC12	-	38.4	3.2	3350	1000	51
		DC24			1.6		840	

Dimensions

Unit: mm

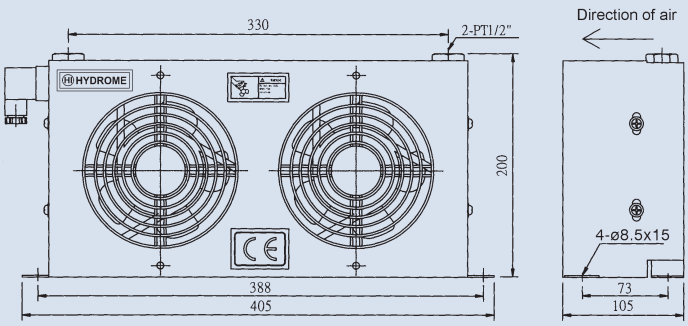

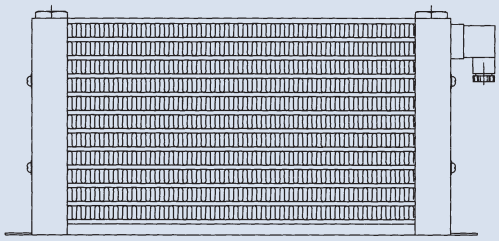

PERFORMANCE DIAGRAM

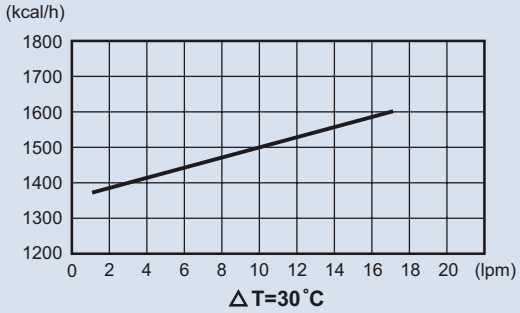

LOSS OF PRESSURE (at 32 Cst)

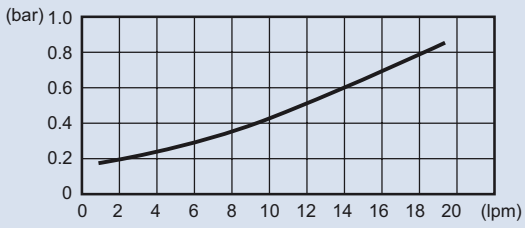

PLATE-FIN HEAT EXCHANGER

Only suitable for the drain port in variable vane pump
which working pressure is under 70 bar. (drain only)

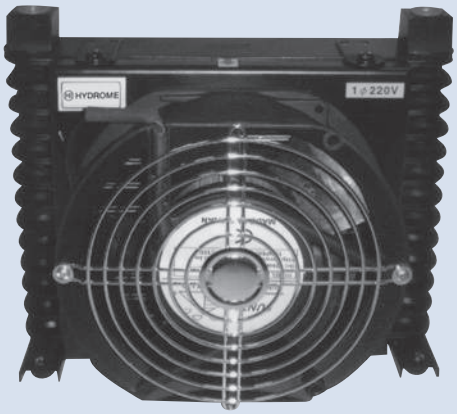

How to order

AL※ - A(D)※

1 2

1	Model	Fan dia: 6"x1 with temperature protection switch	AL404 PT1/2"	AL608 PT3/8"	AL609 PT1/2"
2	Voltage	A1: AC115V	A2: AC230V	A3: AC380V	D1: DC12V	D2: DC24V

Specifications

Model	Motor		Voltage (V)	Frequency (Hz)	Power (W)	Current (A)	Rated Speed (r.p.m)	Air Flow m³/h	Noise dB (A)	Oil Flow (lpm)	Max. Pressure (bar)	Capacity (kcal/h) Δt=30 °C	Weight (kg)
	Phase	IP											
AL404	Single	54	AC115	50/60	45/37	0.6/0.5	2850/3450	457/553	42/48	1~10	10	1100	2.25
			AC230			0.27/0.23							
AL608			AC380		30/25	0.16/0.14						950	2
AL609	-	-	DC12	-	19.2	1.6	3350	500	51			950	2
			DC24			0.8		420					

Dimensions

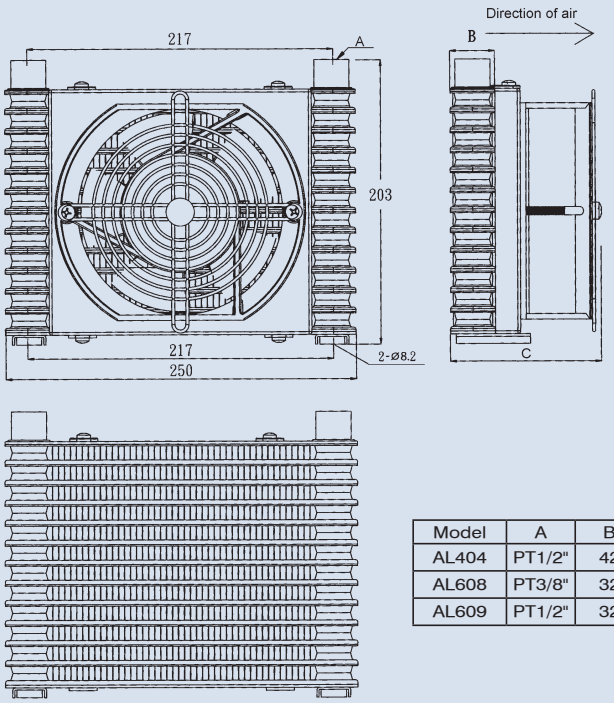

Model	A	B	C
AL404	PT1/2"	42	120
AL608	PT3/8"	32	110
AL609	PT1/2"	32	110

PERFORMANCE DIAGRAM

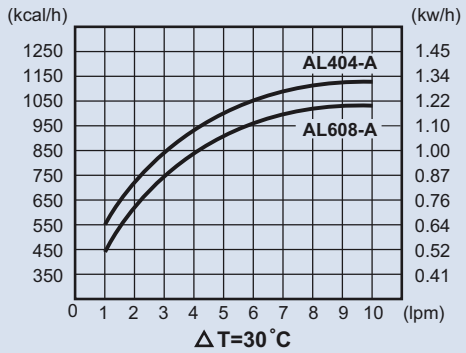

LOSS OF PRESSURE (at 32 Cst)

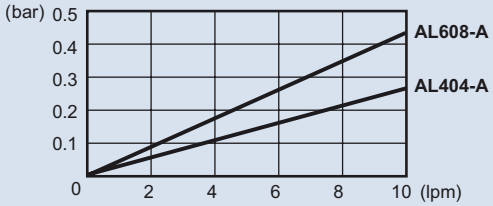

PLATE-FIN HEAT EXCHANGER

Only suitable for the drain port in variable vane pump which working pressure is under 70 bar. (drain only)

How to order

AL※ - C A(D)※

1 2 3

1	Model Fan dia: 6"x1 with temperature protection switch AL404 PT1/2" AL608 PT3/8" AL609 PT1/2"
2	With fan case
3	Voltage A1: AC115V A2: AC230V A3: AC380V D1: DC12V D2: DC24V

Specifications

Model	Motor		Voltage (V)	Frequency (Hz)	Power (W)	Current (A)	Rated Speed (r.p.m)	Air Flow m³/h	Noise dB (A)	Oil Flow (lpm)	Max. Pressure (bar)	Capacity (kcal/h) Δt=30 °C	Weight (kg)
	Phase	IP											
AL404-C	Single	54	AC115	50/60	45/37	0.6/0.5	2850/3450	457/553	42/48	1~10	10	1200	2.6
			AC230			0.27/0.23							
AL608-C			AC380		30/25	0.16/0.14						1050	2.25
AL609-C	-	-	DC12	-	19.2	1.6	3350	500	51			1050	2.25
			DC24			0.8		420					

Dimensions

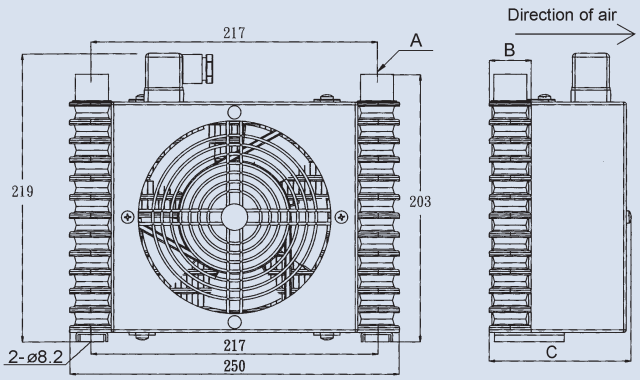

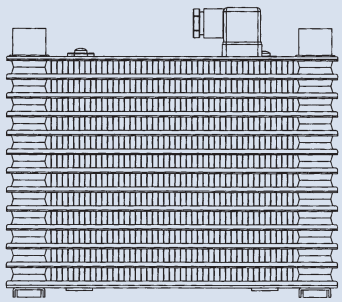

Model	A	B	C
AL404-C	PT1/2"	42	120
AL608-C	PT3/8"	32	110
AL609-C	PT1/2"	32	110

PERFORMANCE DIAGRAM

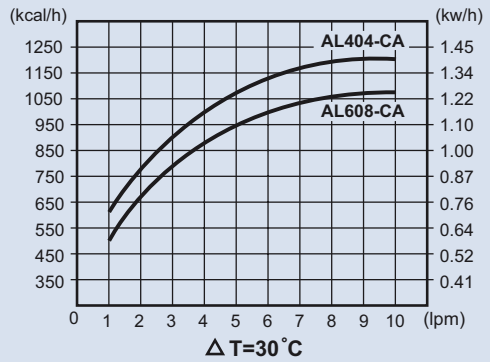

LOSS OF PRESSURE (at 32 Cst)

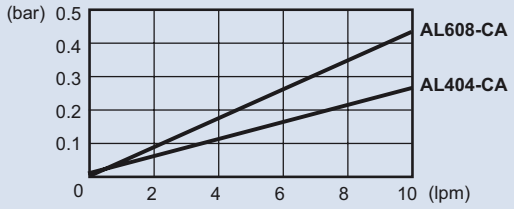

PLATE-FIN HEAT EXCHANGER

Only suitable for the drain port in variable vane pump which working pressure is under 70 bar. (drain only)

How to order

AL※ - 4 A※

1 2 3

1	Model	With temperature protection switch	AL404 PT1/2"	AL608 PT3/8"	AL609 PT1/2"
2	Fan dia: 4: 4"				
3	Voltage	A1: AC115V	A2: AC230V		

Specifications

Model	Motor		Voltage (V)	Frequency (Hz)	Power (W)	Current (A)	Rated Speed (r.p.m)	Air Flow m³/h	Noise dB (A)	Oil Flow (lpm)	Max. Pressure (bar)	Capacity (kcal/h) Δt=30 °C	Weight (kg)
	Phase	IP											
AL404-4	Single	54	AC115	50/60	14/12	0.26/0.22	2600/2800	248/252	35	1~10	10	900	1.75
AL608-4			AC230			0.13/0.11						800	1.5
AL609-4	-	-	-	-	-	-	-	-	-			800	1.5

Dimensions

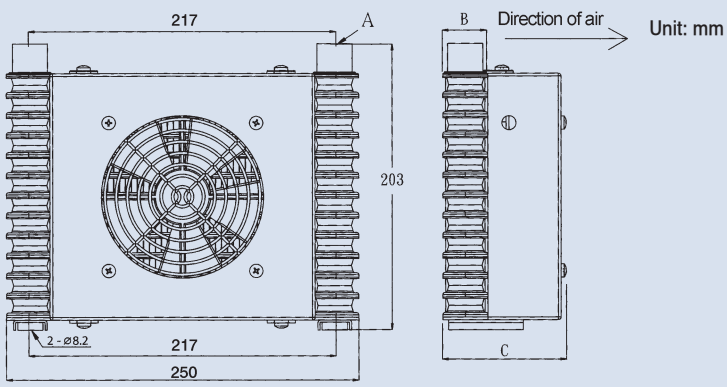

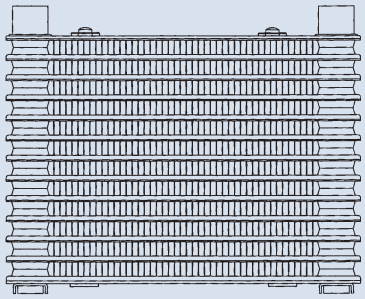

Model	A	B	C
AL404-4	PT1/2"	42	98
AL608-4	PT3/8"	32	88
AL609-4	PT1/2"	32	88

PERFORMANCE DIAGRAM

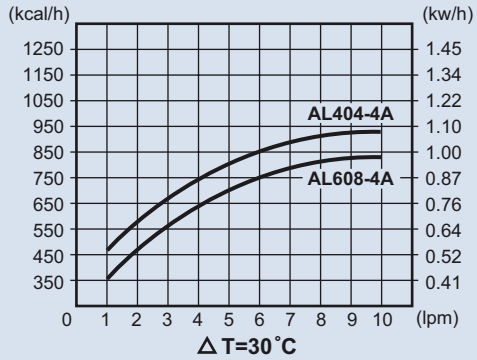

LOSS OF PRESSURE (at 32 Cst)

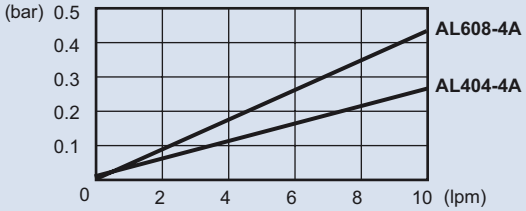

PLATE-FIN HEAT EXCHANGER

Only suitable for the drain port in variable vane pump which working pressure is under 70 bar. (drain only)

How to order

AL	※
1	2

1	Model
2	404 PT1/2" 608 PT3/8" 609 PT 1/2"

Specifications

Model	Oil Flow (lpm)	Max. Pressure (bar)	Weight (kg)
AL404	1~10	10	1
AL608			0.75
AL609			0.75

Dimensions

Unit: mm

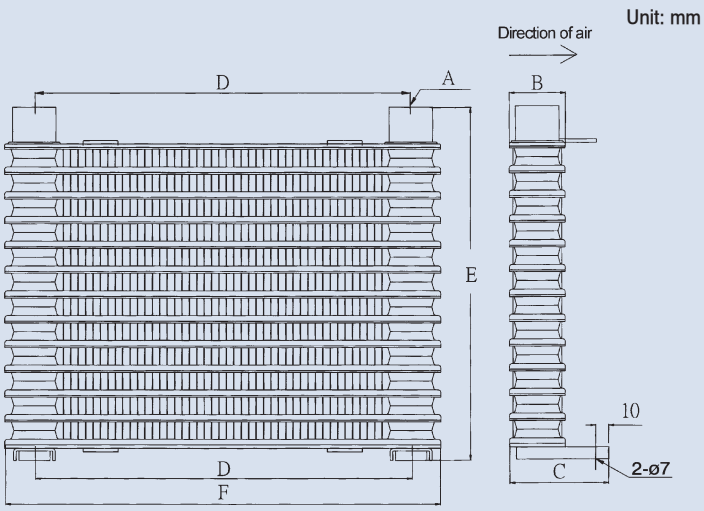

Model	A	B	C	D	E	F
AL404	PT1/2"	42	66	217	203	250
AL608	PT3/8"	32	56	217	203	250
AL609	PT1/2"	32	56	217	203	250

LOSS OF PRESSURE (at 32 Cst)

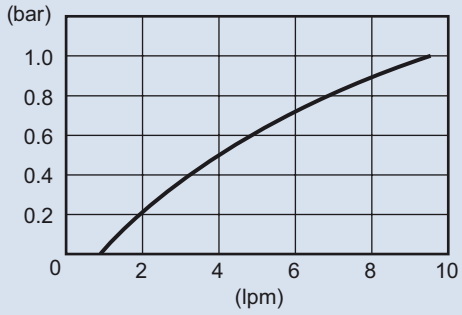

COOLING PUMP & ANTI-BURST VALVE

Dimensions

Cooling pump-for off-line circuit

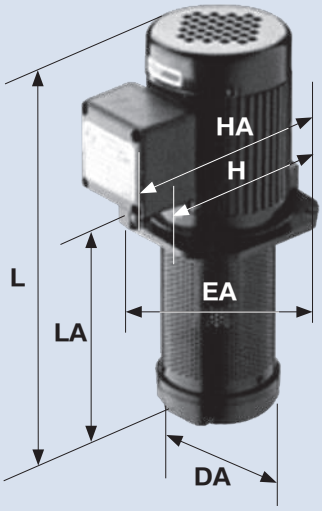

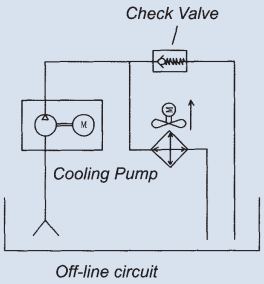

Model	Motor (HP)	Flow Rate (lpm)	L	LA	DA	H	HA	EA	Port (Rc/PT)
TC-6130	1/6	20	275	130	90	124	160	128	1/2"
TC-6180	1/6	20	325	180	90	124	160	128	1/2"
TC-4155	1/4	50	341	155	126	160	191	158	3/4"
TC-4220	1/4	50	406	220	126	160	191	158	3/4"
TC-4350	1/4	50	536	350	126	160	191	158	3/4"
TC-2180	1/2	80	385	180	126	170	196	171	1"
TC-2290	1/2	80	495	290	126	170	196	171	1"
TC-1180	1	120	400	180	151	180	191	185	1"
TC-1240	1	120	460	240	151	180	196	185	1"
TC-1380	1	120	600	380	151	180	196	185	1"

Anti-burst valve - effictive for peak pressure

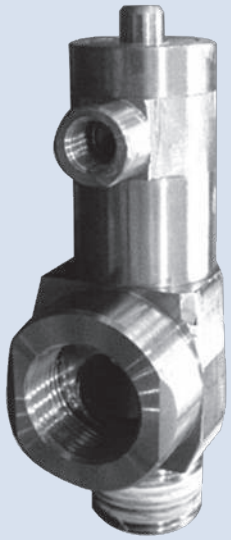

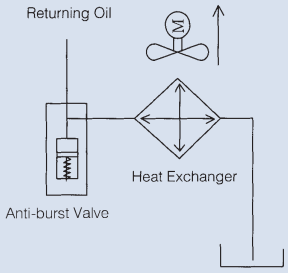

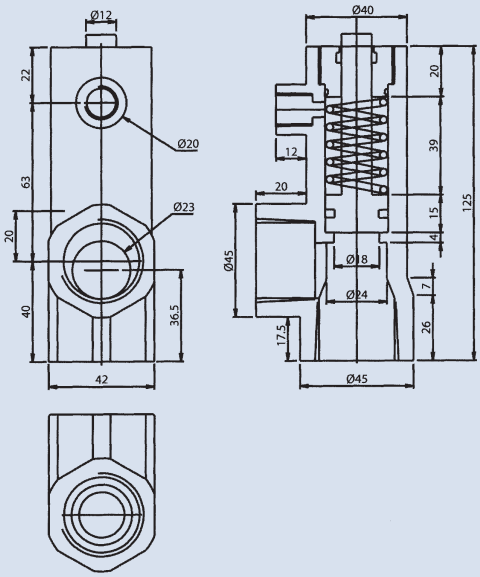

PLATE-FIN HEAT EXCHANGER

INSTALLATION & MAINTENANCE

AH cooler fittings

Option 1. Off-line circuit is strongly recommended

Option 2. Use patent product anti-burst Valve Fig.1 / Fig.2

Option 3. By-pass with check valve (not recommend) Fig.3 / Fig.4

Special notes for option 3

1. The working pressure for AH series is 20 bar.
2. Be carefully the hammering and pulsations pressure which may cause irreversible damage to the cooler.
3. The spring of check valve may crack after a long period of working.

Piping caution

1. Outlet pipe's diameter must match with diameter of the port, and cannot be shrank.
2. Using straight joint or flexible pipe to reduce the feedback resistance.
3. More less of curve and curve angles should be better.

Fig. 1

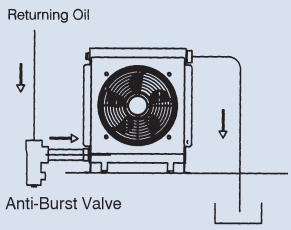

Fig. 2

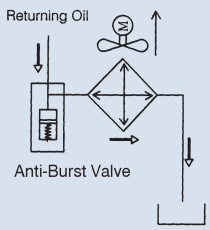

Fig. 3

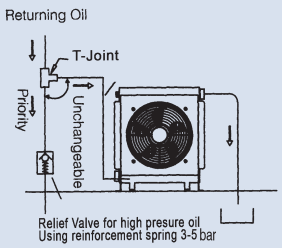

Fig. 4

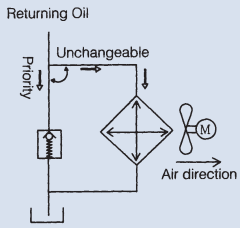

Conclusion: The feedkback oil goes as smooth or fast as possible, to get a better heat rejection.

Installation

The cooler should be mounted at clean environment where is well ventilated area, keep fan diameter free from both cooling side and hot side.

Avoid locating the cooler at areas where can cause obstruction of air intake or exhaust vent.

Avoid locating the cooler at environment with atmosphere contactining corrosive or flammable dusts, oil mist, conductive power (such as carbon or metal).

If mounted in a closed area, sufficient ventilation must be provided. Heat transfer from the cooling system to ambient air may not increase room temperature, if these conditions are not met, air ducts have to be installed between cooling system and the outside to provide sufficient ventilation.

Check the supply voltage and frequency correspond to the rating plate.

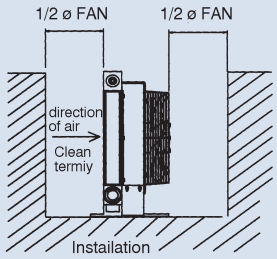

Maintenance

Before maintenance, please make sure to keep the power off.

Ensure that there are no obstacles to the flow of air, either at the intake or at the outlet from the core, please maintain the cooler termly for a longer life.

External cleaning of air side

This can be done by either washing the cooler with a mild cleaner (compatible with aluminum), or with compressed air. A power spray washer works well. Care should be taken not to damage the fins. The direction of stream shall be parallel to the fins in order not to damage it. The cooler needs to be dried completely before restarting operation.

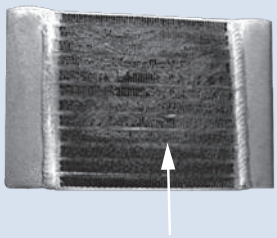

Dust on cooling air inlet side

Internal cleaning of cooler side

The cooler should be disconnected, and a suitable cleaning agent used for removing the type of deposit, yet safe on aluminum should be circulated through the cooler until clean. After cleaning procedure, the cleaning medium shall be completely drained and blown out by means of compressed air.

CALCULATION OF AIR-OIL HEAT EXCHANGER INSTALLED ON HYDRAULIC SYSTEM

Introduction:

First of all, the choice of cooling system needs finding out the heat quantity of the hydraulic system, and furthermore we can design the appropriate cooling mode and ability for the requirements of clients.

The quantity of producing heat on hydraulic system can not be estimated by calculation, because of the different of components and elements, using frequency and the design of circuit make this impossible.

1. Choosing the cooler rely on flow rate is only a basic condition, because we choose the input motor horse power by considering the pressure of pump and flow rate in the meantime.
2. The selecting of cooler depended on the quantity of producing heat matches up with the cooling capability on the system.
3. According to the actuality experience, we could count up the appraised value by inputting 70% electricity energy into the heat quantity. (different engineer and elements make this different.)
4. If we are using more delicate components and less heat quantity product, then the 70% heat quantity could be lower to 60% or much lower. Please confirm to your distributor.
5. If there is hydraulic motor in the circuit, then we should calculate the heat quantity up to 100%.

Data required

1. Simplify

Contrast the input horse power with hydraulic horse power in the performance table, and you could find out the applicable cooler.

2. Calculate

N=installed power in the system (kW)
Q=heat to be dissipated (kcal/h)
To=maximum allowed oil temperature (°C)
Tamb=ambient temperature (°C)
Kr: Means the required specific performance of the heat exchanger
Kr=Q/ΔT, ΔT is the difference between oil inlet temperature and summer ambient temperature, while Q is the quantity of heat to be dissipated which can be easily calculated considering 60～100% of installed power.

Example (hydraulic):

N=20 kW To=50 °C Tamb=35 °C
Q=70% x 20 kw=14 kW=12040 kcal/h (1kW=860 kcal/h)
ΔT=50-35=15 °C
Kr=12040 kcal/h÷15 °C=802 kcal/h °C=0.93 kW/°C
The choice of the correct cooler is made by using the diagrams.
You will find in our technical catalogues.

Equivalents among main units

1HP=635kcal/h 1kW=860kcal/h 1cSt=1 mm^2/sec 1BTU=0.25 kcal/h 1bar=100kpa

PLATE-FIN HEAT EXCHANGER

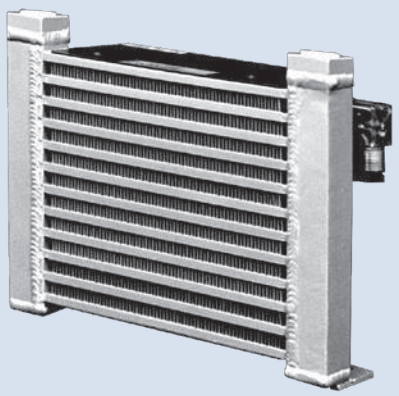

How to order

S1	-	20	-	3T / 4T	4(6)	C	A※(D※)	P	E
1		2		3	4	5	6	7	8

1	Series no.	5	None: Without fan case C: With fan case
2	Model	6	Voltage D1: DC12V D2: DC24V A1: AC110V A2: AC220V A3: AC380V (50/60HZ)
3	Port size 3T: PT 3/8" 4T: PT 1/2"	7	Motor phase P: Single phase
4	Fan diameter 4: 4" 6: 6"	8	E: CE approved

Specifications

Oil Flow (lpm)	Capacity Δt=30 °C (Kcal/hr)	MAX. Pressure (bar)	Voltage (V±10%)	Frequence (Hz)	Current (A)	Power (Watt)	Rated Speed (r.p.m)	Air Flow (m^3/hr)	Motor (IP)	Noise (dB (A))	Weight (kg)
1~15	No fan	15	-	-	-	-	-	-	-	-	1.2
	830 (4" fan)		DC12	-	0.6	7.2	2600	187	54	40	2.4
			DC24	-	0.3	7.2	2600	187		40	
			110	50/60	0.24/0.27	19/23	2700/3100	142.8/178.5		45/51	
			220	50/60	0.12/0.14	20/24	2700/3100	142.8/178.5		45/51	
	950 (6" fan)		DC12	-	0.96	11.5	3000	384.2		51	2.8
			DC24	-	0.48	11.5	3000	384.2		51	
			110	50/60	0.48/0.55	45/52	2800/3100	323/374		53/59	
			220	50/60	0.28/0.35	44/51	2800/3100	323/374		53/59	
			380	50/60	0.12/0.15	46/57	2800/3100	323/374		53/59	

Dimensions/Performance curves

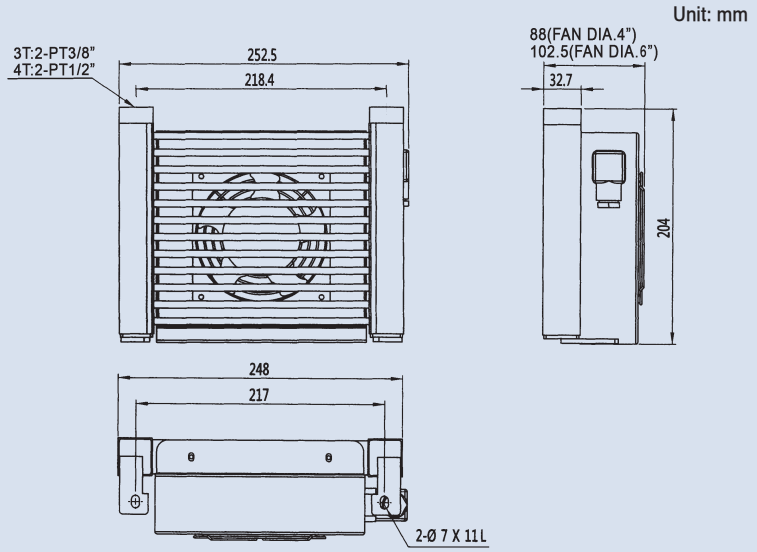

PERFORMANCE DIAGRAM

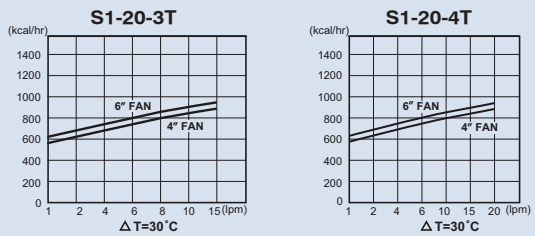

LOSS OF PRESSURE (at 32 Cst)

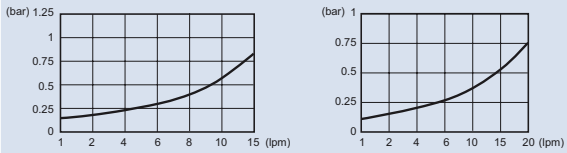

PLATE-FIN HEAT EXCHANGER

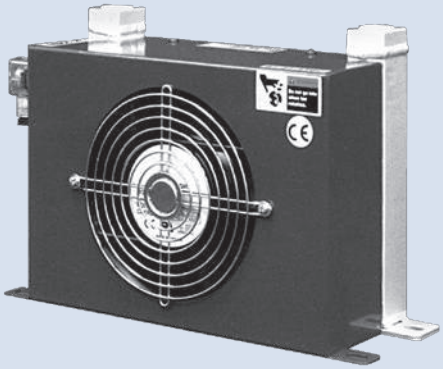

How to order

S1 - 21 - 4T 6 C A※(D※) P E

1	2	3	4	5	6	7	8

1	Series no.
2	Model
3	Port size 4T: PT 1/2"
4	Fan diameter 6: 6"
5	C: With fan case
6	Voltage D1: DC12V D2: DC24V A1: AC110V A2: AC220V A3: AC380V (50/60HZ)
7	Motor phase P: Single phase
8	E: CE approved

Specifications

Oil Flow (lpm)	Capacity Δt=30 °C (Kcal/hr)	MAX. Pressure (bar)	Voltage (V±10%)	Frequence (Hz)	Current (A)	Power (Watt)	Rated Speed (r.p.m)	Air Flow (m³/hr)	Motor (IP)	Noise (dB (A))	Weight (kg)
1~20	1100	15	DC12	-	0.96	11.5	3000	384.2	54	51	3.3
			DC24	-	0.48	11.5	3000	384.2		51	
			110	50/60	0.48/0.55	45/52	2800/3100	323/374		53/59	
			220	50/60	0.28/0.35	44/51	2800/3100	323/374		53/59	
			380	50/60	0.12/0.15	46/57	2800/3100	323/374		53/59	

Dimensions/Performance curves

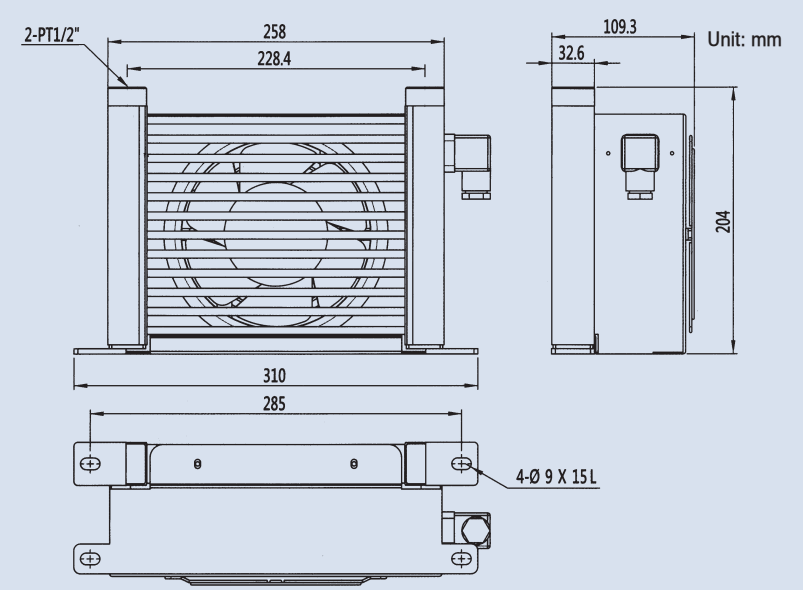

PERFORMANCE DIAGRAM

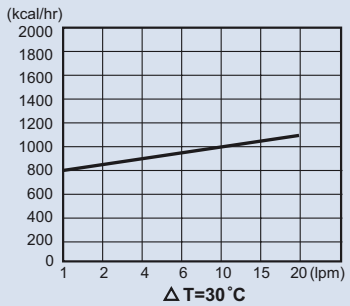

LOSS OF PRESSURE (at 32 Cst)

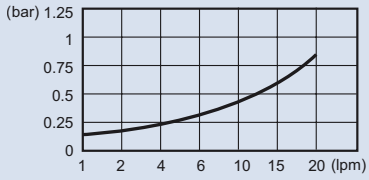

PLATE-FIN HEAT EXCHANGER

How to order

S1 - 31 - 4T 6 C A※(D※) P E

1 2 3 4 5 6 7 8

1	Series no.
2	Model
3	Port size 4T: PT 1/2"
4	Fan diameter 6: 6"
5	C: With fan case
6	Voltage D1: DC12V D2: DC24V A1: AC110V A2: AC220V A3: AC380V (50/60HZ)
7	Motor phase P: Single phase
8	E: CE approved

Specifications

Oil Flow (lpm)	Capacity Δt=30 °C (Kcal/hr)	MAX. Pressure (bar)	Voltage (V±10%)	Frequence (Hz)	Current (A)	Power (Watt)	Rated Speed (r.p.m)	Air Flow (m^3/hr)	Motor (IP)	Noise (dB (A))	Weight (kg)
1~20	1750	15	DC12	-	1.92	23	3000	768.4	54	51	4.7
			DC24	-	0.96	23	3000	768.4		51	
			110	50/60	0.96/1.10	90/104	2800/3100	646/748		53/59	
			220	50/60	0.56/0.70	88/102	2800/3100	646/748		53/59	
			380	50/60	0.24/0.30	70/82	2800/3100	646/748		53/59	

Dimensions/Performance curves

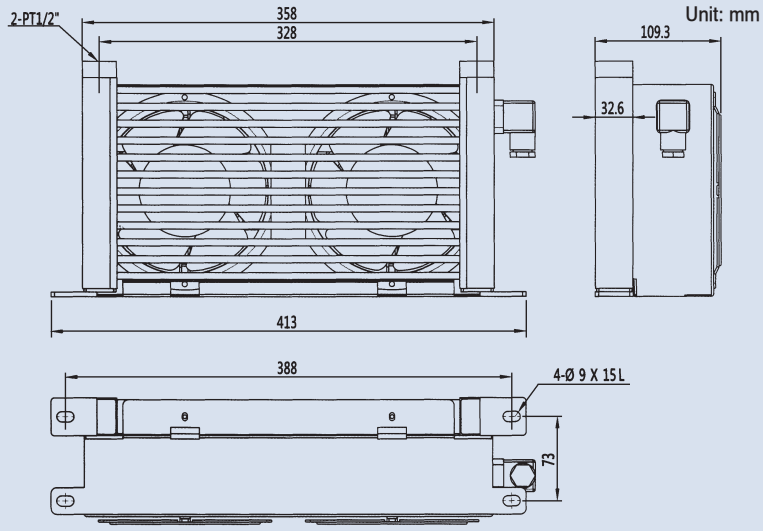

PERFORMANCE DIAGRAM

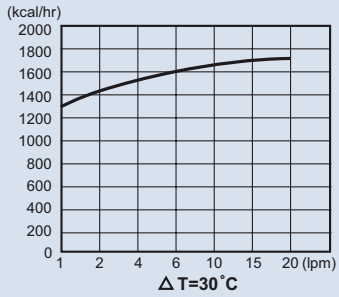

LOSS OF PRESSURE (at 32 Cst)

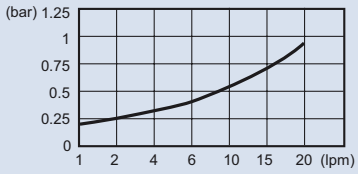

PLATE-FIN HEAT EXCHANGER

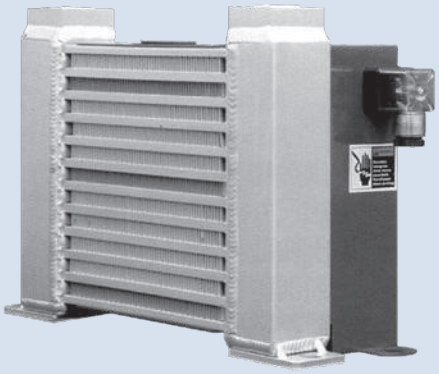

How to order

S2 - 15 - 6T 6 C A※(D※) P E

1 2 3 4 5 6 7 8

1	Series no.
2	Model
3	Port size 6T: PT 3/4"
4	Fan diameter 6: 6"
5	C: With fan case
6	Voltage D1: DC12V D2: DC24V A1: AC110V A2: AC220V A3: AC380V (50/60HZ)
7	Motor phase P: Single phase
8	E: CE approved

Specifications

Oil Flow (lpm)	Capacity Δt=30 °C (Kcal/hr)	MAX. Pressure (bar)	Voltage (V±10%)	Frequence (Hz)	Current (A)	Power (Watt)	Rated Speed (r.p.m)	Air Flow (m^3/hr)	Motor (IP)	Noise (dB (A))	Weight (kg)
3~60	1500	15	DC12	-	0.96	11.5	3000	384.2	54	51	4
			DC24	-	0.48	11.5	3000	384.2		51	
			110	50/60	0.48/0.55	45/52	2800/3100	323/374		53/59	
			220	50/60	0.28/0.35	44/51	2800/3100	323/374		53/59	
			380	50/60	0.12/0.15	46/57	2800/3100	323/374		53/59	

Dimensions/Performance curves

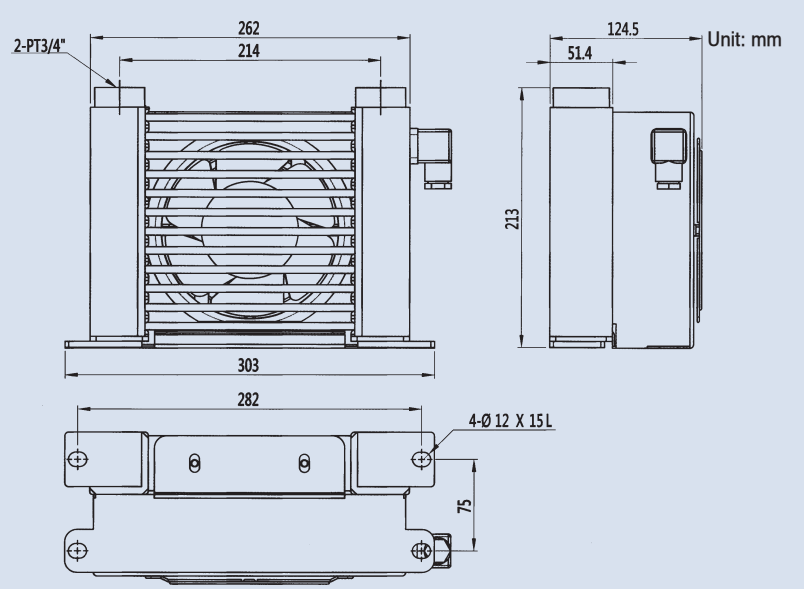

PERFORMANCE DIAGRAM

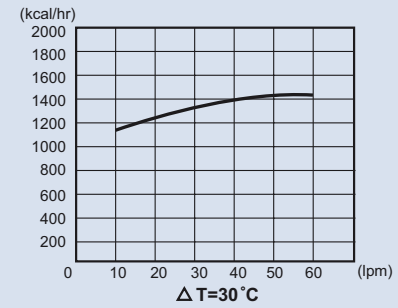

LOSS OF PRESSURE (at 32 Cst)

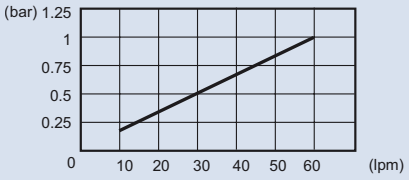

PLATE-FIN HEAT EXCHANGER

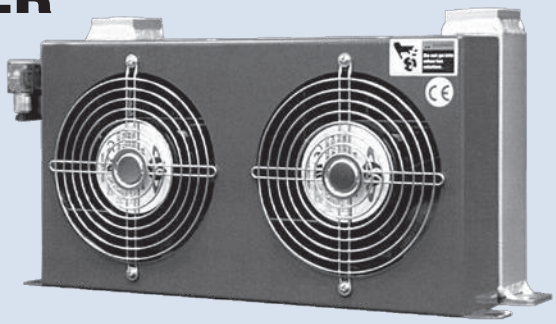

How to order

S2 - 25 - 6T 6 C A※(D※) P E

1 2 3 4 5 6 7 8

1	Series no.
2	Model
3	Port size 6T: PT 3/4"
4	Fan diameter 6: 6"
5	C: With fan case
6	Voltage D1: DC12V D2: DC24V A1: AC110V A2: AC220V A3: AC380V (50/60HZ)
7	Motor phase P: Single phase
8	E: CE approved

Specifications

Oil Flow (lpm)	Capacity Δt=30 °C (Kcal/hr)	MAX. Pressure (bar)	Voltage (V±10%)	Frequence (Hz)	Current (A)	Power (Watt)	Rated Speed (r.p.m)	Air Flow (m^3/hr)	Motor (IP)	Noise (dB (A))	Weight (kg)
3~60	2700	15	DC12	-	1.92	23	3000	768.4	54	51	6
			DC24	-	0.96	23	3000	768.4		51	
			110	50/60	0.96/1.10	90/104	2800/3100	646/748		53/59	
			220	50/60	0.56/0.70	88/102	2800/3100	646/748		53/59	
			380	50/60	0.24/0.30	70/82	2800/3100	646/748		53/59	

Dimensions/Performance curves

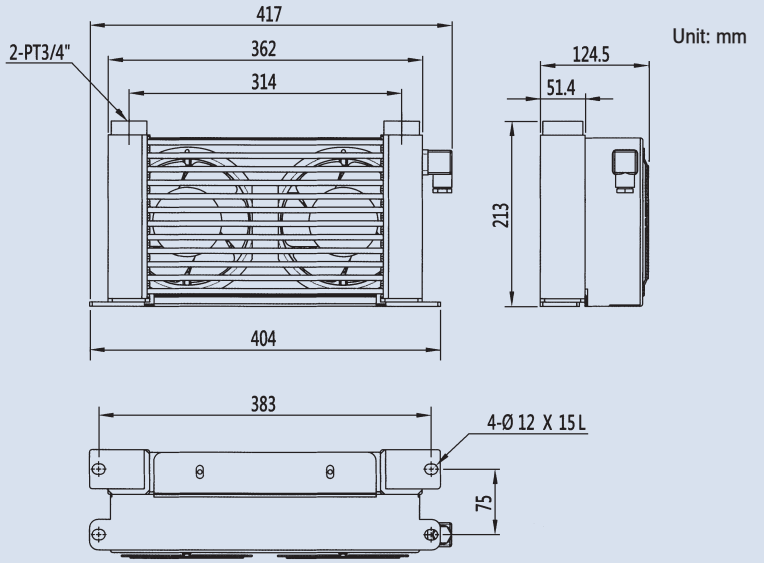

PERFORMANCE DIAGRAM

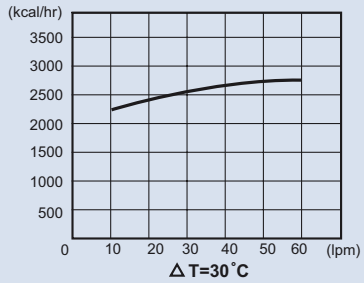

LOSS OF PRESSURE (at 32 Cst)

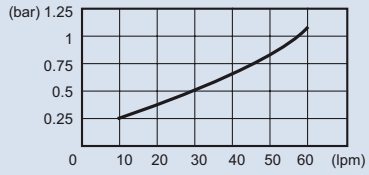

PLATE-FIN HEAT EXCHANGER

How to order

S2	-	26	-	8T	10	C	A※(D※)	P PP	E
1		2		3	4	5	6	7	8

1	Series no.
2	Model
3	Port size 8T: PT 1"
4	Fan diameter 10: 10"
5	C: With fan case
6	Voltage D1: DC12V D2: DC24V A1: AC110V A2: AC220V A3: AC380V A23: AC220/380V (50/60HZ)
7	Motor phase P: Single phase PP: 3 phase
8	E: CE approved

Specifications

Oil Flow (lpm)	Capacity Δt=30 °C (Kcal/hr)	MAX. Pressure (bar)	Voltage (V±10%)	Frequence (Hz)	Current (A)	Power (Watt)	Rated Speed (r.p.m±5%)	Air Flow (m³/hr)	Motor (IP)	Noise (dB (A))	Weight (kg)
20~100	6000	15	DC12	-	7.9	94.8	2325	2160	54	74.5	7.5
			DC24	-	3.95	94.8	2313	2642		74.5	
			110	50/60	0.56/0.55	62/61	1400/1600	1460/1600		55/57	9.1
			220	50/60	0.30/0.25	62/61	1400/1600	1460/1600		55/57	
			380	50/60	0.18/0.14	62/61	1400/1600	1460/1600		55/57	

Dimensions/Performance curves

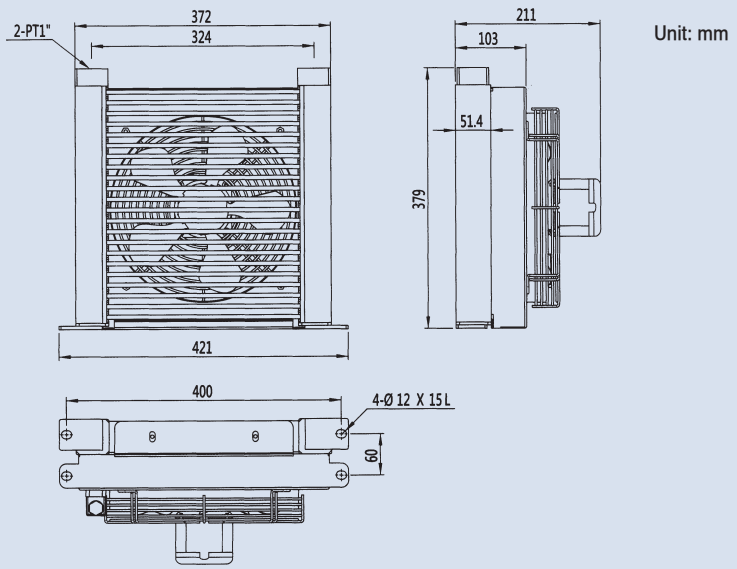

PERFORMANCE DIAGRAM

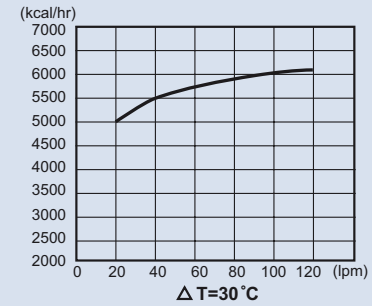

LOSS OF PRESSURE (at 32 Cst)

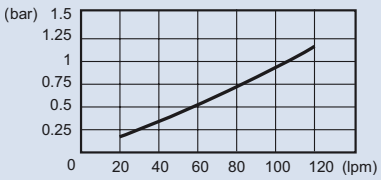

PLATE-FIN HEAT EXCHANGER

How to order

S2	-	40	-	8T	14	C	A※(D※)	P PP	E
1		2		3	4	5	6	7	8

1	Series no.
2	Model
3	Port size 8T: PT 1"
4	Fan diameter 14: 14"
5	C: With fan case
6	Voltage D1: DC12V D2: DC24V A1: AC110V A2: AC220V A3: AC380V A23: AC220/380V (50/60HZ)
7	Motor phase P: Single phase PP: 3 phase
8	E: CE approved

Specifications

Oil Flow (lpm)	Capacity Δt=30 °C (Kcal/hr)	MAX. Pressure (bar)	Voltage (V±10%)	Frequence (Hz)	Current (A)	Power (Watt)	Rated Speed (r.p.m±5%)	Air Flow (m^3/hr)	Motor (IP)	Noise (dB (A))	Weight (kg)
30~110	12000	15	DC12	-	4.5	54	2495	1360	54	70.6	12.5
			DC24	-	2.25	54	2272	1097		74.3	
			110	50/60	1.36/1.63	150/180	1380/1550	3170/3420		62/65	15.3
			220	50/60	0.80/0.70	150/180	1380/1550	3170/3420		62/65	
			380	50/60	0.40/0.47	150/180	1380/1550	3170/3420		62/65	

Dimensions/Performance curves

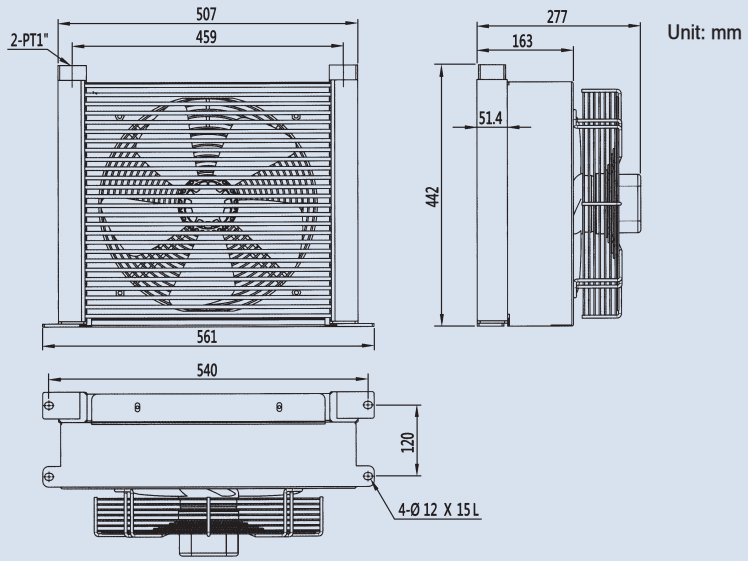

PERFORMANCE DIAGRAM

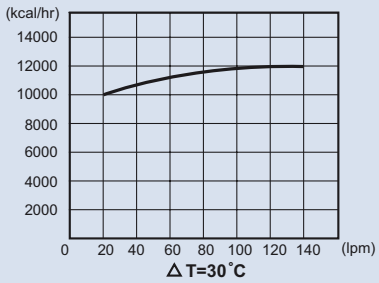

LOSS OF PRESSURE (at 32 Cst)

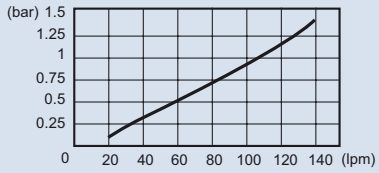

PLATE-FIN HEAT EXCHANGER

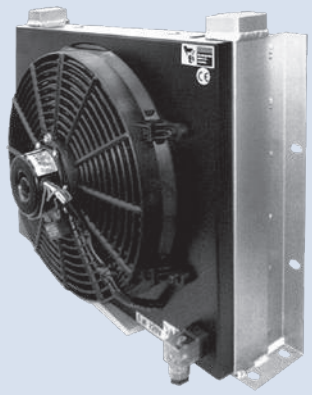

How to order

S2 - 40 - 8T 14 D A※(D※) P E

1 2 3 4 5 6 7 8

1	Series no.
2	Model
3	Port size 8T: PT 1"
4	Fan diameter 14: 14"
5	D: With small fan case
6	Voltage D1: DC12V D2: DC24V A1: AC110V A2: AC220V (50/60HZ)
7	Motor phase P: Single phase
8	E: CE approved

Specifications

Oil Flow (lpm)	Capacity Δt=30 °C (Kcal/hr)	MAX. Pressure (bar)	Voltage (V±10%)	Frequence (Hz)	Current (A)	Power (Watt)	Rated Speed (r.p.m±5%)	Air Flow (m^3/hr)	Motor (IP)	Noise (dB (A))	Weight (kg)
30~110	12000	15	DC12	-	4.5	54	2495	1360	54	70.6	10
			DC24	-	2.25	54	2272	1097		74.3	
			110	50/60	0.36/0.45	40/50	1450/1650	2700/3300		62/65	
			220	50/60	0.18/0.23	40/50	1450/1650	2700/3300		62/65	

Dimensions/Performance curves

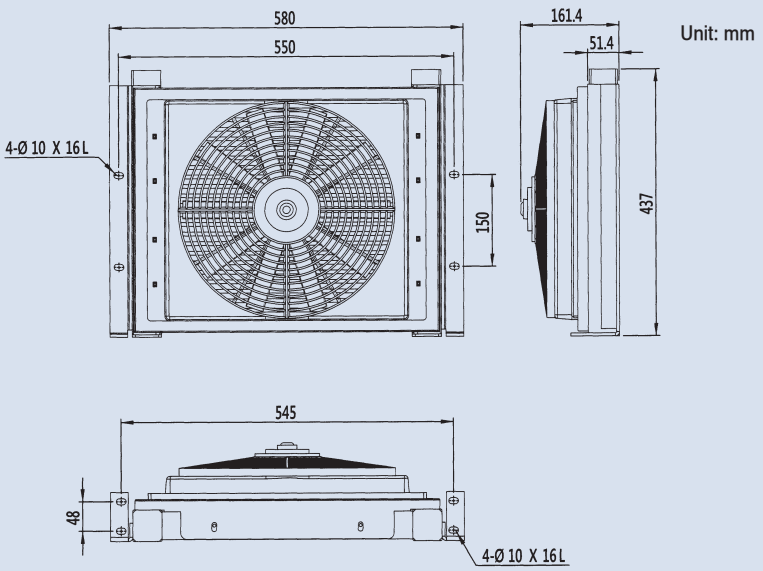

PERFORMANCE DIAGRAM

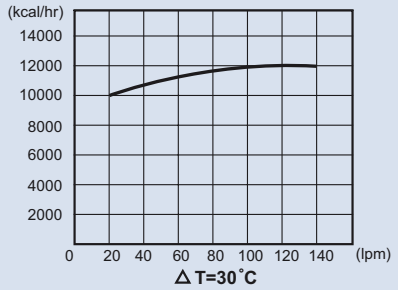

LOSS OF PRESSURE (at 32 Cst)

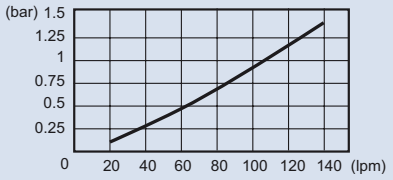

PLATE-FIN HEAT EXCHANGER

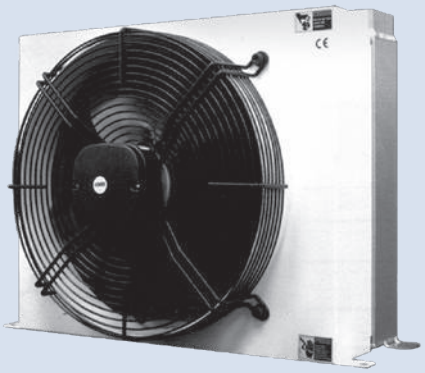

How to order

S3	-	39	-	10T	14	C	A※	P PP	E
1		2		3	4	5	6	7	8

1	Series no.
2	Model
3	Port size 10T: PT 1-1/4"
4	Fan diameter 14: 14"
5	C: With fan case
6	Voltage A1: AC110V A2: AC220V A3: AC380V A23: AC220/380V (50/60HZ)
7	Motor phase P: Single phase PP: 3 phase
8	E: CE approved

Specifications

Oil Flow (lpm)	Capacity Δt=30 °C (Kcal/hr)	MAX. Pressure (bar)	Voltage (V±10%)	Frequence (Hz)	Current (A)	Power (Watt)	Rated Speed (r.p.m±5%)	Air Flow (m^3/hr)	Motor (IP)	Noise (dB (A))	Weight (kg)
30~150	18000	20	220	50/60	0.80/0.70	150/180	1380/1550	3170/3420	54	62/65	18.3
			380	50/60	0.40/0.36	150/180	1380/1550	3170/3420		62/65	

Dimensions/Performance curves

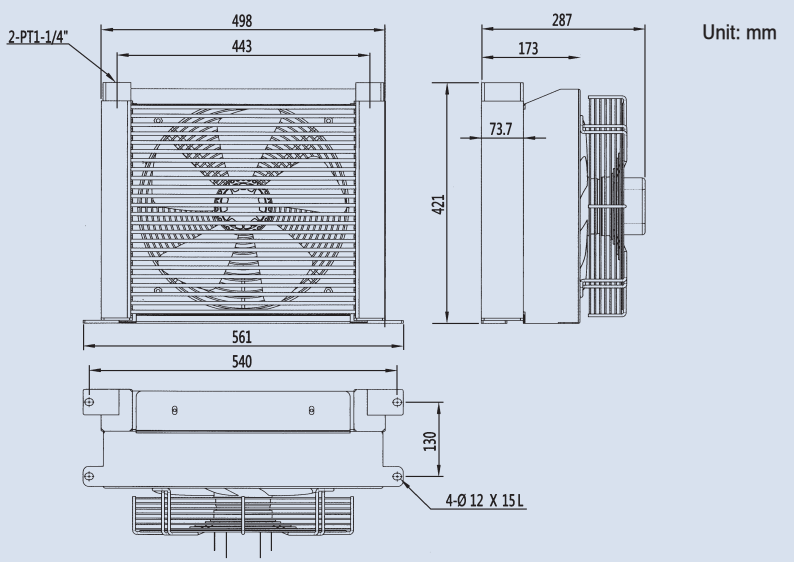

PERFORMANCE DIAGRAM

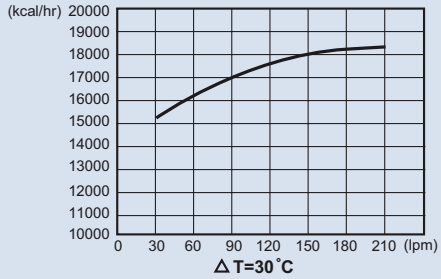

LOSS OF PRESSURE (at 32 Cst)

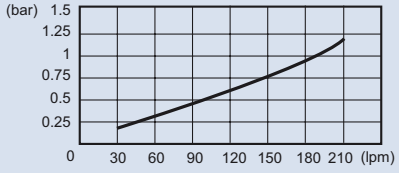

PLATE-FIN HEAT EXCHANGER

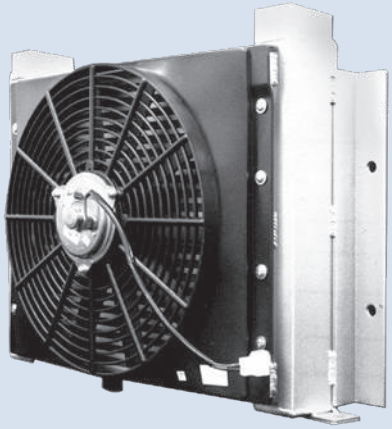

How to order

S3	-	39	-	10T	14	D	A※(D※)	P	E
1		2		3	4	5	6	7	8

1	Series no.
2	Model
3	Port size 10T: PT 1-1/4"
4	Fan diameter 14: 14"
5	D: With small fan case
6	Voltage D1: DC12V D2: DC24V A1: AC110V A2: AC220V (50/60HZ)
7	Motor phase P: Single phase
8	E: CE approved

Specifications

Oil Flow (lpm)	Capacity Δt=30 °C (Kcal/hr)	MAX. Pressure (bar)	Voltage (V±10%)	Frequence (Hz)	Current (A)	Power (Watt)	Rated Speed (r.p.m±5%)	Air Flow (m^3/hr)	Motor (IP)	Noise (dB (A))	Weight (kg)
30~150	18000	20	DC12	-	4.5	54	2495	1360	54	70.6	12.4
			DC24	-	2.25	54	2272	1097		74.3	
			110	50/60	0.36/0.45	40/50	1450/1650	2700/3300		62/65	
			220	50/60	0.18/0.23	40/50	1450/1650	2700/3300		62/65	

Dimensions/Performance curves

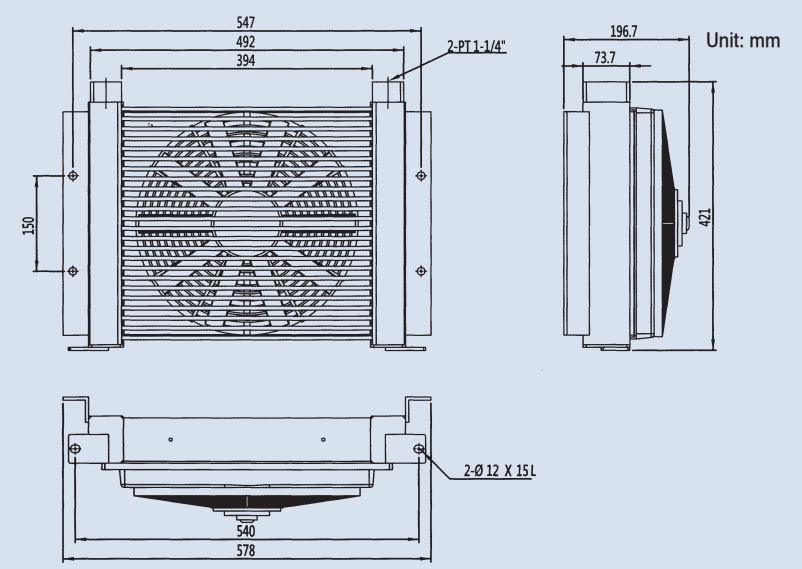

PERFORMANCE DIAGRAM

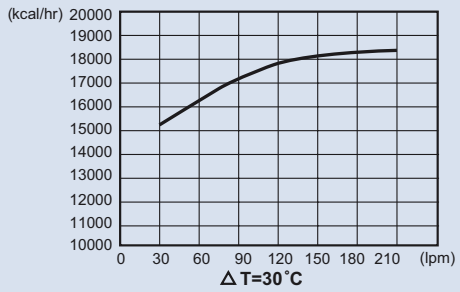

LOSS OF PRESSURE (at 32 Cst)

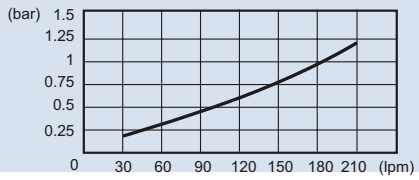

PLATE-FIN HEAT EXCHANGER

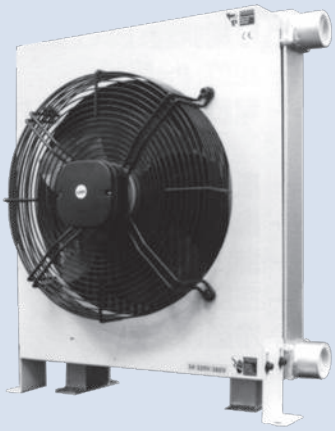

How to order

S3	-	47	-	12T	14	C	A※	P PP	E
1		2		3	4	5	6	7	8

1	Series no.
2	Model
3	Port size 12T: PT 1-1/2"
4	Fan diameter 14: 14"
5	C: With fan case
6	Voltage A2: AC220V A3: AC380V A23: AC220/380V (50/60HZ)
7	Motor phase P: Single phase PP: 3 phase
8	E: CE approved

Specifications

Oil Flow (lpm)	Capacity Δt=30 °C (Kcal/hr)	MAX. Pressure (bar)	Voltage (V±10%)	Frequence (Hz)	Current (A)	Power (Watt)	Rated Speed (r.p.m±5%)	Air Flow (m^3/hr)	Motor (IP)	Noise (dB (A))	Weight (kg)
30~200	23000	20	220 380	50/60	0.80/0.70 0.40/0.36	150/180	1380/1550	3200/3800	54	62/64	24.2

Dimensions/Performance curves

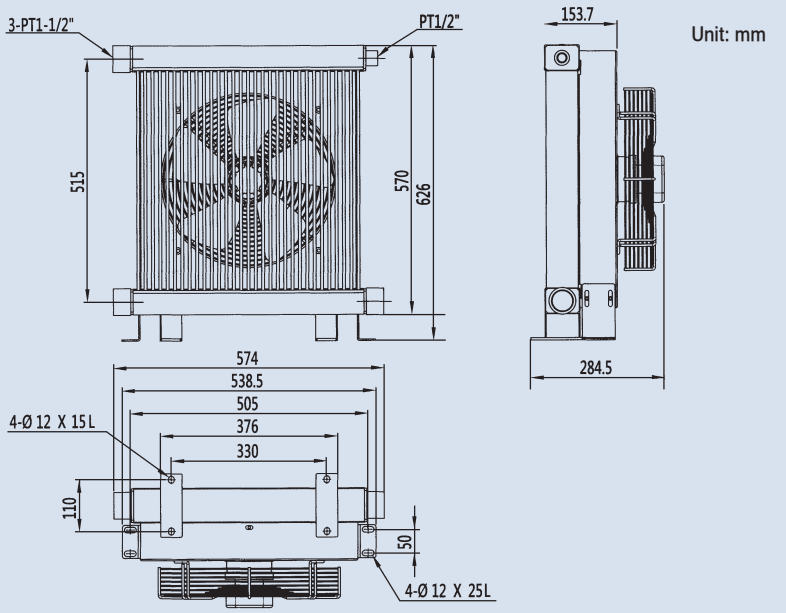

PERFORMANCE DIAGRAM

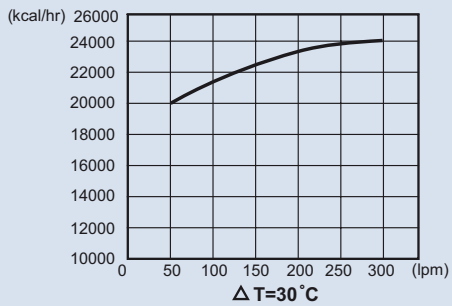

LOSS OF PRESSURE (at 32 Cst)

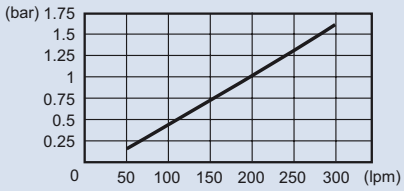

PLATE-FIN HEAT EXCHANGER

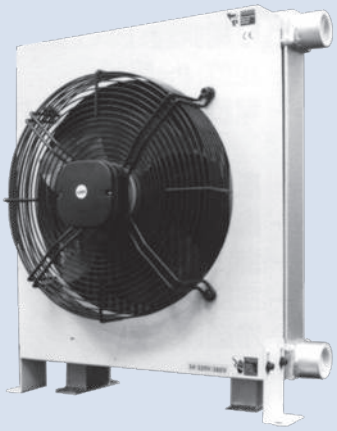

How to order

S4	-	48	-	12T	16	C	A※	PP	E
1		2		3	4	5	6	7	8

1	Series no.
2	Model
3	Port size 12T: PT 1-1/2"
4	Fan diameter 16: 16"
5	C: With fan case
6	Voltage A2: AC220V A3: AC380V A23: AC220/380V (50/60HZ)
7	Motor phase P: Single phase PP: 3 phase
8	E: CE approved

Specifications

Oil Flow (lpm)	Capacity Δt=30 °C (Kcal/hr)	MAX. Pressure (bar)	Voltage (V±10%)	Frequence (Hz)	Current (A)	Power (Watt)	Rated Speed (r.p.m±5%)	Air Flow (m³/hr)	Motor (IP)	Noise (dB (A))	Weight (kg)
30~250	28000	20	220 380	50/60	0.90/1.0 0.50/0.53	145/250	1380/1550	4000/4800	54	62/64	29.4

Dimensions/Performance curves

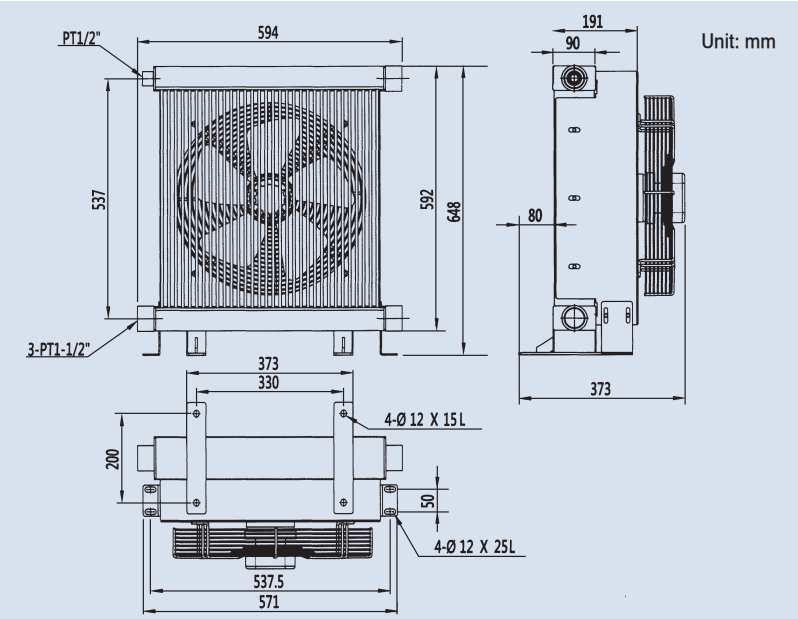

PERFORMANCE DIAGRAM

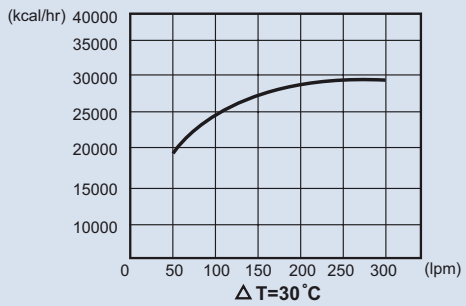

LOSS OF PRESSURE (at 32 Cst)

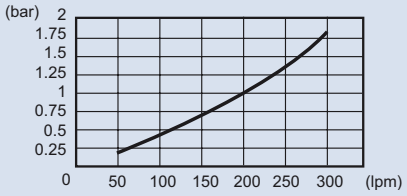

PLATE-FIN HEAT EXCHANGER

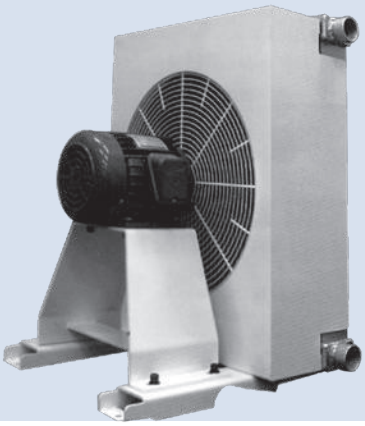

How to order

S4 - 63 - 12T 18 C A23 PP E

1	2	3	4	5	6	7	8

1	Series no.
2	Model
3	Port size 12T: PT 1-1/2"
4	Fan diameter 18:18"
5	C: With fan case
6	Voltage A23: AC220V/380V (50/60HZ)
7	Motor phase PP: 3 phase
8	E: CE approved

Specifications

Oil Flow (lpm)	Capacity Δt=30°C (Kcal/hr)	MAX. Pressure (bar)	Voltage (V±10%)	Frequence (Hz)	Current (A)	Power (kw)	Rated Speed (r.p.m±5%)	Air Flow (m^3/hr)	Motor (IP)	Noise (dB (A))	Weight (kg)
50~300	35000	20	220 380	60	5.7 3.3	1.25	1720	7600	55	78	52

Dimensions/Performance curves

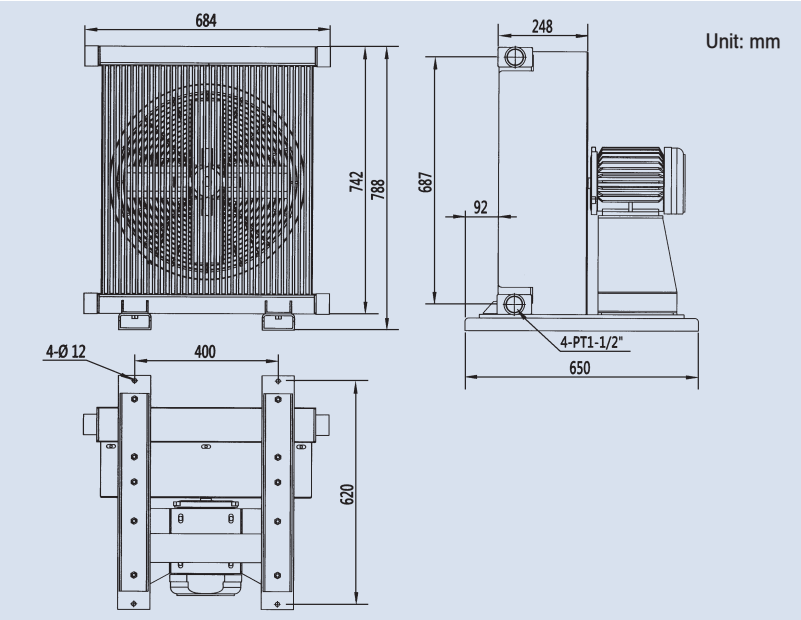

PERFORMANCE DIAGRAM

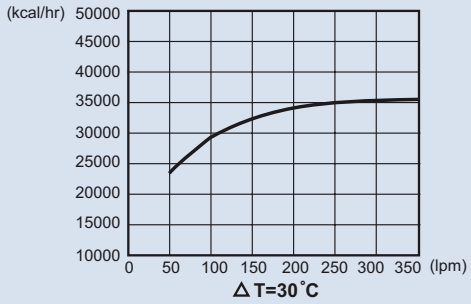

LOSS OF PRESSURE (at 32 Cst)

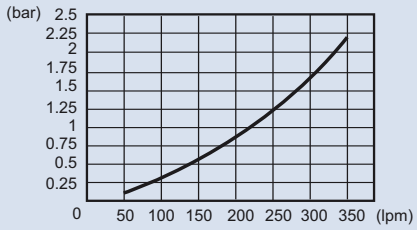

PLATE-FIN HEAT EXCHANGER

How to order

S4	-	70	-	12T	23	C	A23	PP	E
1		2		3	4	5	6	7	8

1	Series no.
2	Model
3	Port size 12T: PT 1-1/2"
4	Fan diameter 23: 23"
5	C: With fan case
6	Voltage A23: AC220V/380V (50/60HZ)
7	Motor phase PP: 3 phase
8	E: CE approved

Specifications

Oil Flow (lpm)	Capacity Δt=30°C (Kcal/hr)	MAX. Pressure (bar)	Voltage (V±10%)	Frequence (Hz)	Current (A)	Power (kw)	Rated Speed (r.p.m±5%)	Air Flow (m^3/hr)	Motor (IP)	Noise (dB (A))	Weight (kg)
50~350	40000	20	220 380	60	5.7 3.3	1.25	1720	8560	55	90	80

Dimensions/Performance curves

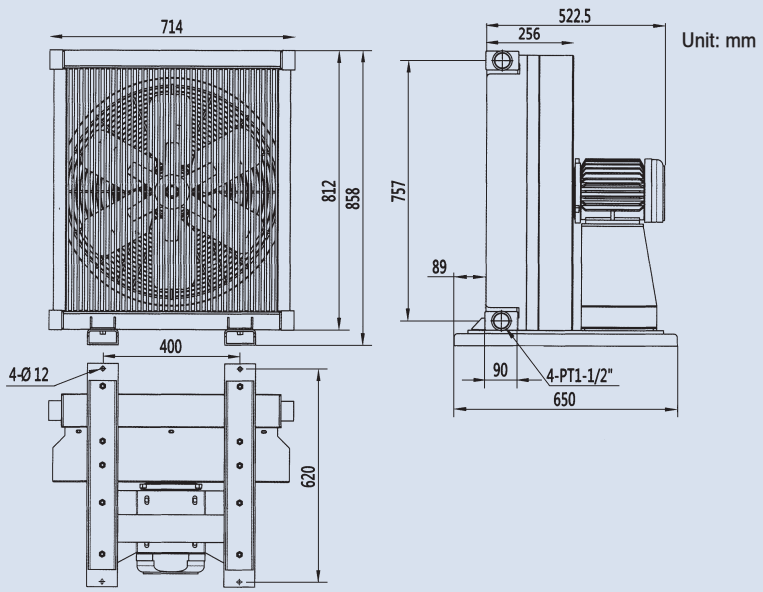

PERFORMANCE DIAGRAM

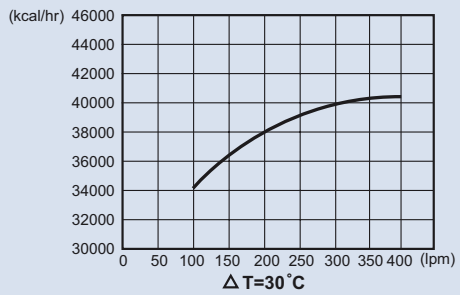

LOSS OF PRESSURE (at 32 Cst)

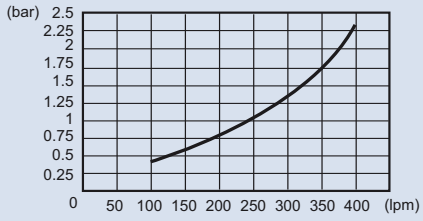

4ManPro
Elements For Manufacturing Processes

HI HYDROME

INTERRUPTORES DE PRESION (PRESSURE SWITCH)

PRESSURE SWITCH

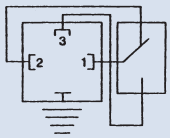

USED CURRENT
AC 250V 3A

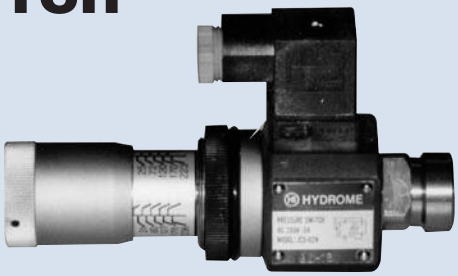

JCS-02N, 02NL, 02NLL

JPS-02HM, 02L, 02LL

H

How to order

JCS - 02 - N
1 2 3

1	Model	Body: Cast iron	
2	Port size	PT1/4"	
3	Pressure adjusting range	N: 30~230 bar NLL: 5~60 bar	NL: 15~60 bar

JPS - 02 - HM
1 2 3

1	Model	Body: cast iron	
2	Port size	PT1/4"	
3	Pressure adjusting range	HM: 30~230 bar LL: 5~60 bar	L: 15~60 bar

Specifications

Model	Pressure Adj. Range (bar)	Max. Pressure (bar)	Weight (kg)
JCS-02N	30~230	230	0.9
JCS-02NL	15~60	230	0.9
JCS-02NLL	5~60	230	0.9
JPS-02HM	30~230	230	1.45
JPS-02L	15~60	230	1.45
JPS-02LL	5~60	230	1.45

Dimensions

Unit: mm

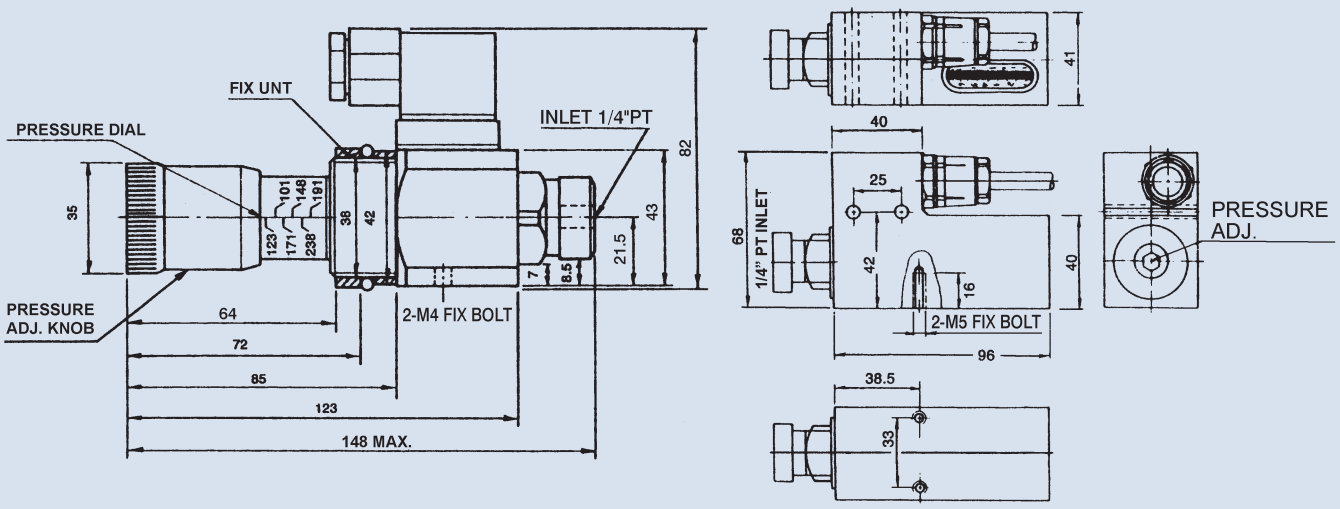

PRESSURE SWITCH

APSA

APSB

APSC

APSG

APSH

H

How to order

APSA,APSB,APSC - 230 - 1

1 2 3

1	Model	Pipe connection type	Body: Aluminum alloy
2	Pressure adjusting range (bar)		
3	Port size	1: 1/4"PT 2: 1/4"NPT 3: 1/4"SAE 4: 1/4"BSP	

APSH,APSG - 60

1 2

1	Model	Sub-plate mounting type	Body: AL6061-T6
2	Pressure adjusting range (bar)		

Specifications

Model	Pressure Adj. Range (bar)		Max. Overpressure (bar)	Repetition Accuracy	Max. Voltage Current	Weight (kg)
APSA	35: 5~35 150: 30~150 420: 90~420	70: 10~70 230: 50~230	600	±1%	250 VAC (3A) 30 VDC (4A)	0.75
APSB						0.67
APSC	60: 5~60 275: 25~275	125: 10~125 400: 30~400				0.6
APSG	60: 5~60 275: 25~275	125: 10~125				0.6
APSH						0.57

Dimensions

APSB

Unit: mm

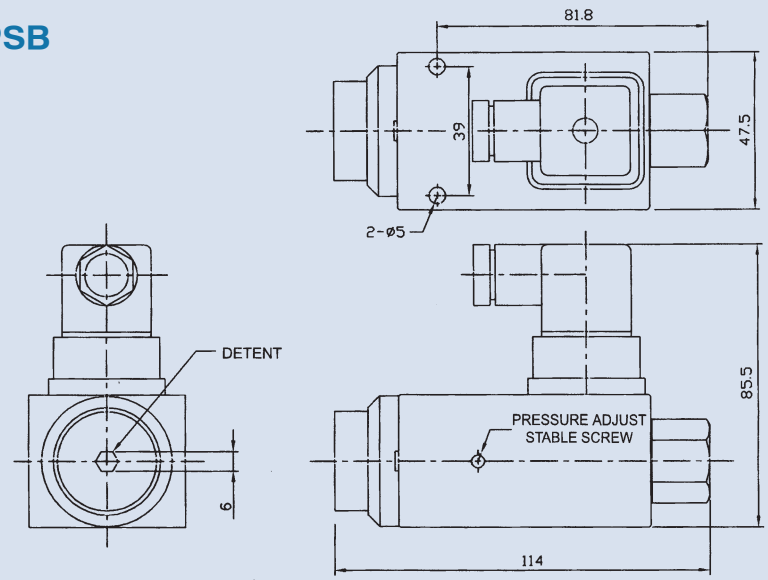

PRESSURE SWITCH

H

Dimensions

Unit: mm

APSA

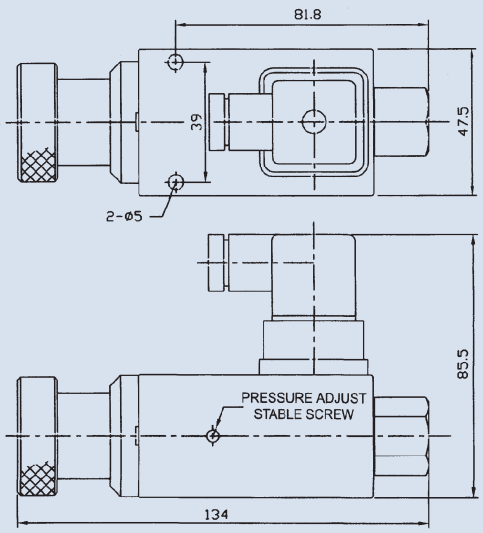

APSC

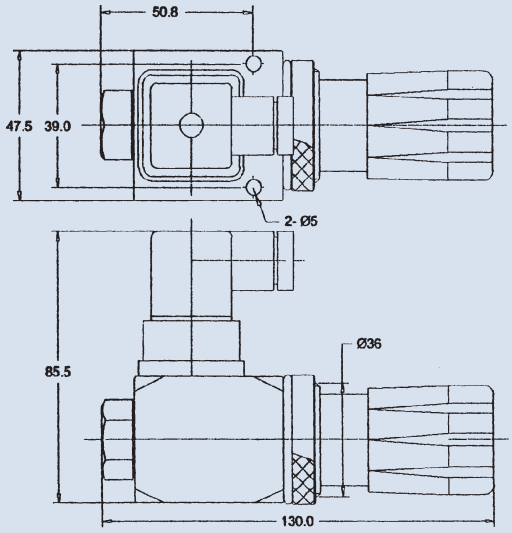

APSG

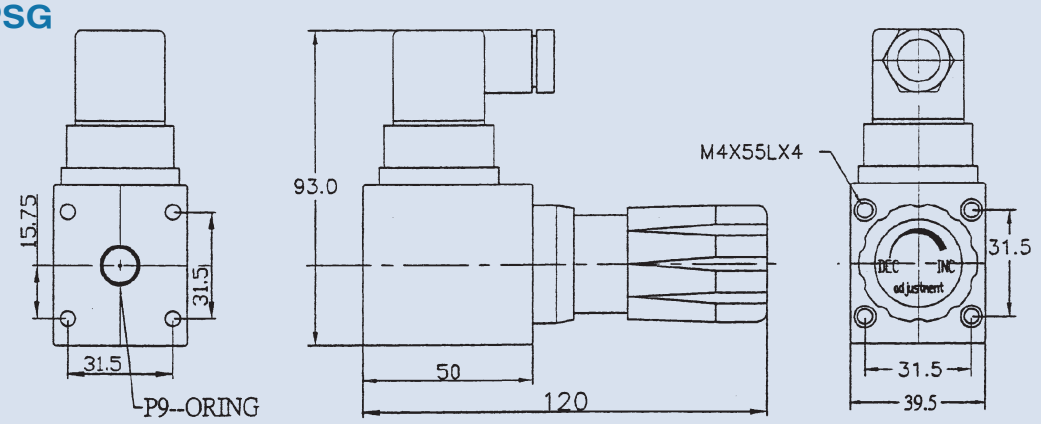

APSH

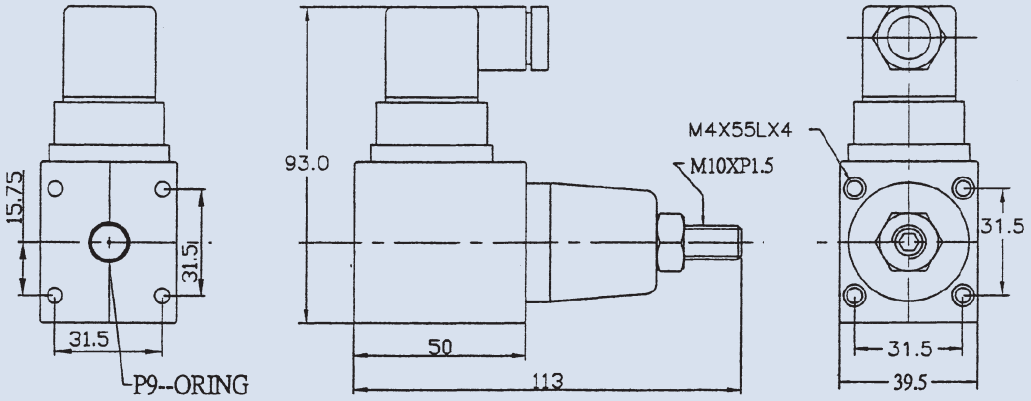

PRESSURE SWITCH

Performance curves

APSA, APSB-35

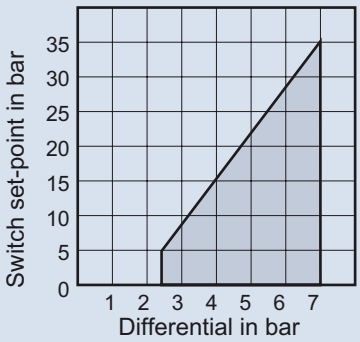

APSA, APSB-70

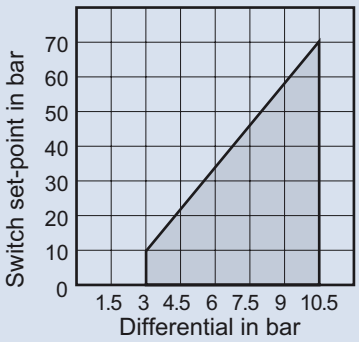

APSA, APSB-150

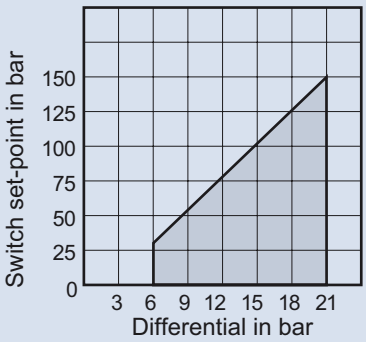

APSA, APSB-230

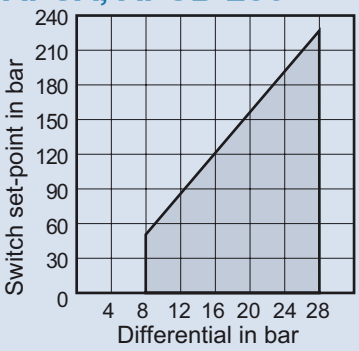

APSA, APSB-420

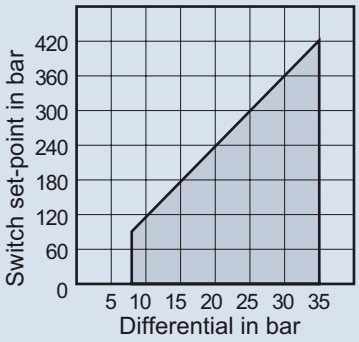

APSC, APSG, APSH-60

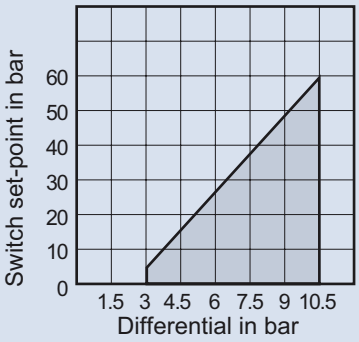

APSC, APSG, APSH-125

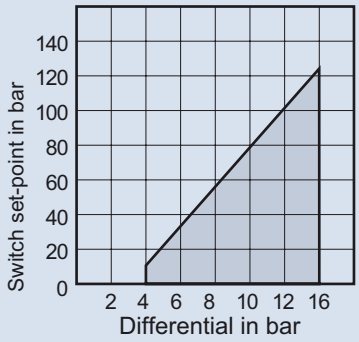

APSC, APSG, APSH-275

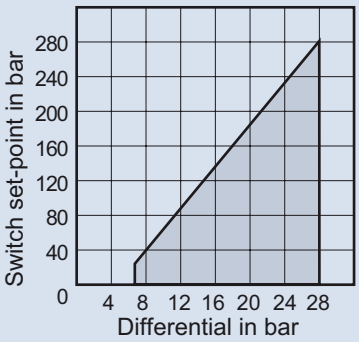

APSC-400

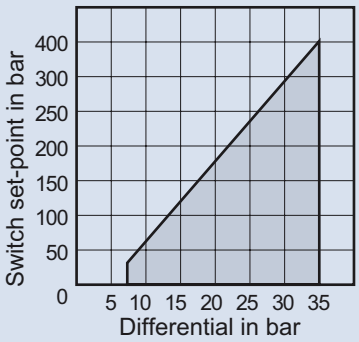

H

PRESSURE SWITCH

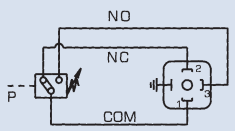

NO=Normally open
NC=Normally closed

DNF

DNA

DNB

H

How to order

DNF - 100 - 22B - 1
1 2 3 4

1	Model DNF: Panel mounting type DNA: Standard type DNB: Tool adjustment type
2	Pressure adjusting range (bar)
3	22B: Without indicator led 06I: With indicator led
4	Port size 1: 1/4"PT 2: 1/4"NPT 3: 1/4"PF (G)

Specifications

Model	Pressure Adj. Range (bar)	Max. Pressure (bar)	Max. Voltage Current (lpm)	Weight (kg)
DNF	40: 6~40 70: 10~70 100: 15~100 150: 20~150 250: 40~250 360: 50~360	40: 150 70: 150 100: 250 150: 250 250: 400 360: 400	22B: 250 VAC (3A) 30 VDC (2A) 06I: 250 VAC (<0.6A) 24 VDC (<0.6A)	1.2
DNA				1
DNB	40: 6~40 70: 10~70 150: 20~150 250: 40~250	40: 150 70: 150 150: 250 250: 400		0.6

Dimensions

Unit: mm
(inch)

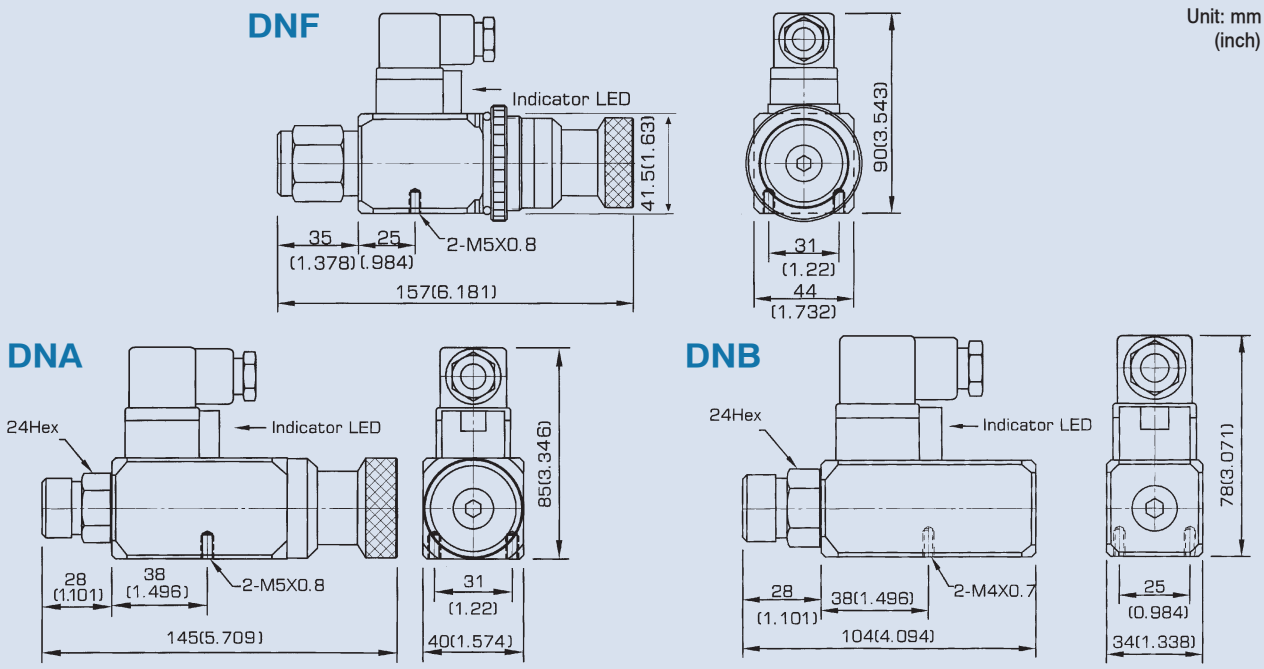

MODULAR PRESSURE SWITCH

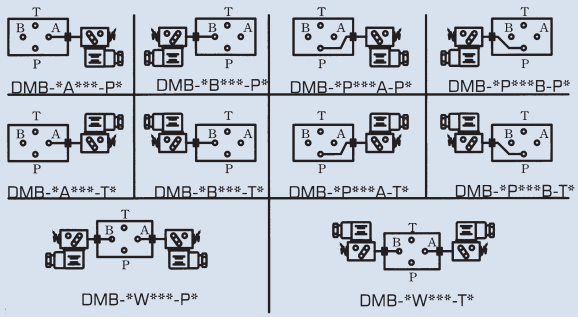

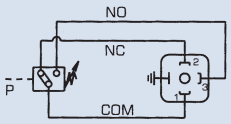

NO=Normally open
NC=Normally closed

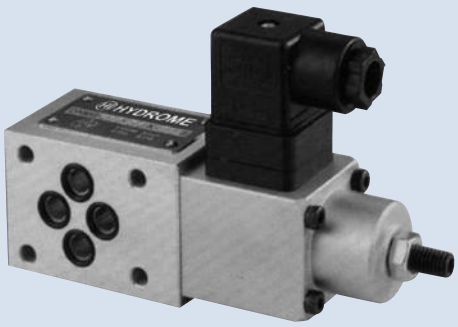

H

How to order

DMB - 02 P 250 A - P B
1 2 3 4 5 6 7

1	Model DMB: Modular type
2	For valve size 02: ISO CETOP 3, NFPA D03, DIN NG 6 03: ISO CETOP 5, NFPA D05, DIN NG 10
3	Control port A: A port B: B port P: P port W: A and B ports
4	Pressure adjusting range 40: 6~40 bar 70: 8~70 bar 150: 15~150 bar 250: 40~250 bar
5	Position of the pressure adjustment
6	Position of the electrical connector
7	B: Without indicator led I: With indicator led

Specifications

Model	Pressure Adj. Range (bar)		Max. Pressure (bar)		Max. Voltage Current (lpm)	Weight (kg)
DMB-02P (A,B)					B: 250 VAC (3A) 30 VDC (2A)	0.55
DMB-02W	40: 6~40	70: 8~70	40: 150	70: 150		0.80
DMB-03P (A,B)	150: 15~150	250: 40~250	150: 250	250: 400	I: 250 VAC (<0.6A) 24 VDC (<0.6A)	0.90
DMB-03W						1.5

Dimensions

Unit: mm (inch)

DMB-02W

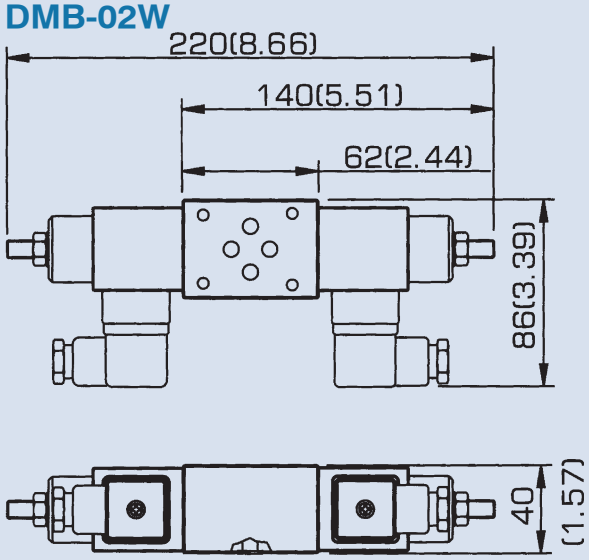

DMB-03W

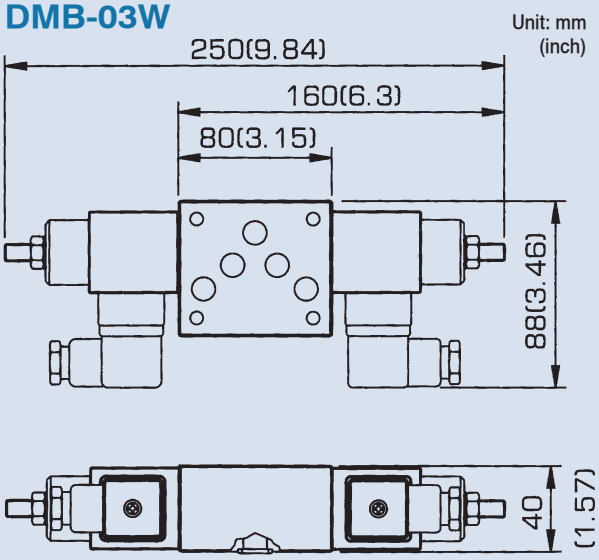

MINIATURE PRESSURE SWITCH

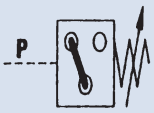

APSI

APSL

H

How to order

APSI, APSL - 250 - 1

1 2 3

1	Model Body: Aluminum alloy
2	Pressure adjusting range (bar)
3	Port size 1: 1/4"PT

Specifications

Model	Pressure Adj. Range (bar)	Max. Overpressure (bar)	Repetition Accuracy	Max. Voltage Current	Weight (kg)
APSI	70: 5~70 150: 10~150 250: 25~250 400: 30~400	500	±1%	250 VAC (3A)	0.3
APSL	35: 5~35 70: 10~70 250: 25~250	400		30 VDC (4A)	0.26

Dimensions

Unit: mm

APSI

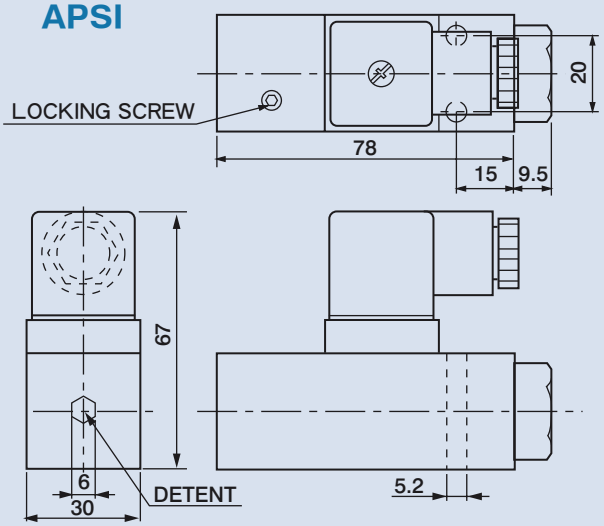

APSL

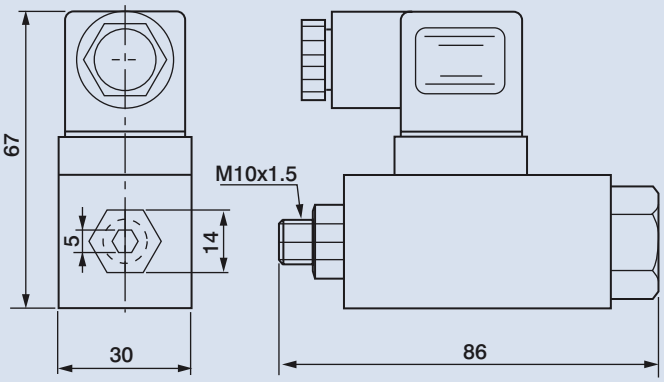

MINIATURE PRESSURE SWITCH

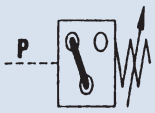

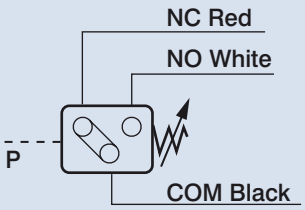

NO=Normally open
NC=Normally closed

H

How to order

TC - 250 - 1
1 2 3

1	Model
2	Pressure adjusting range (bar)
3	Port size 1: 1/4"PT (RC) 2: 1/4"NPT 3: 1/4"PF (G)

Specifications

Model	Pressure Adj. Range (bar)	Max. Pressure (bar)	Max. Voltage Current	Weight (kg)
TC-050	6~50	150	250 VAC (3A) 30 VDC (2A)	0.15
TC-100	10~100	300		0.15
TC-150	20~150	300		0.15
TC-250	30~250	350		0.15
TC-350	40~350	400		0.15

Dimensions / Performance curves

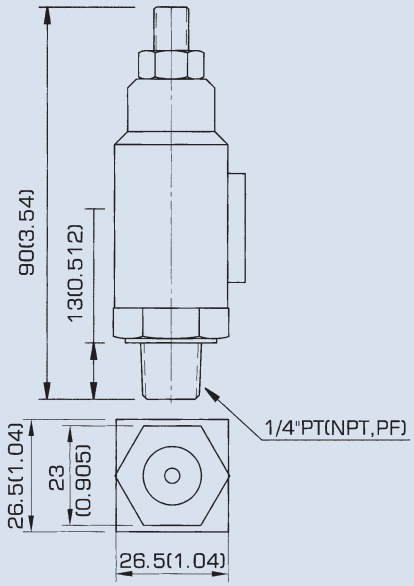

Unit: mm
(inch)

TC-050-1

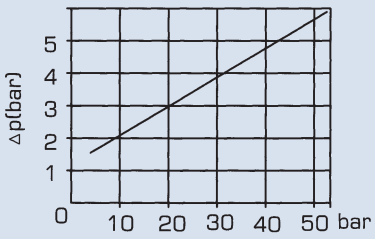

TC-100-1

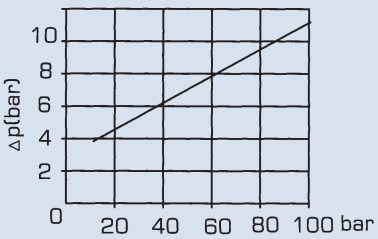

TC-150-1,TC-250-1

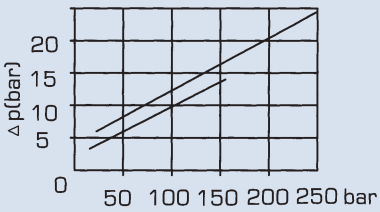

TC-350-1

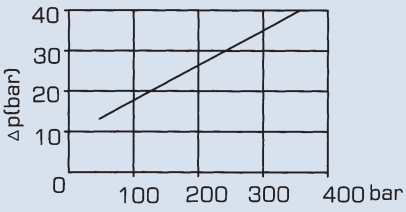

4ManPro
Elements For Manufacturing Processes

HI HYDROME

UNIDADES DE POTENCIA (POWER PACK)

POWER PACK

Manifold functions

MR&MK Type

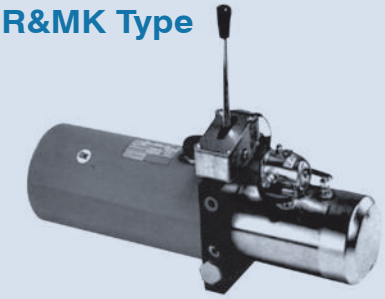

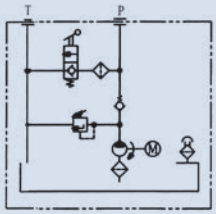

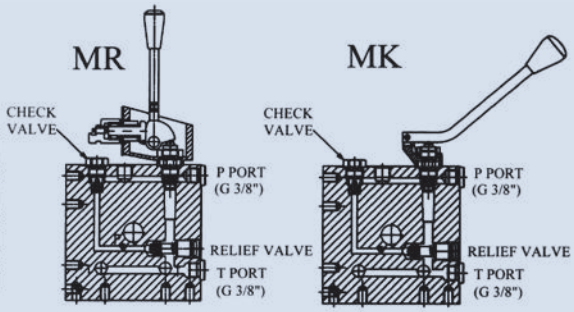

"S" Type

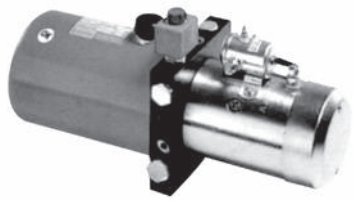

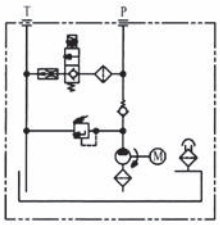

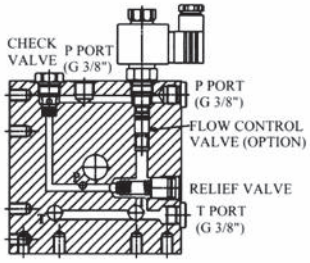

"N" Type

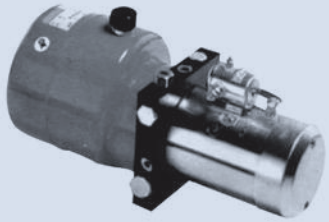

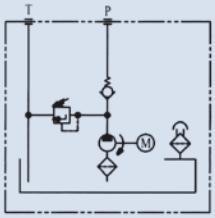

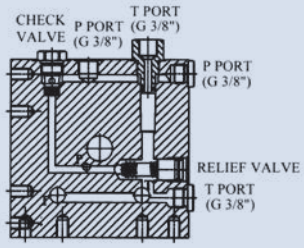

"A" Type

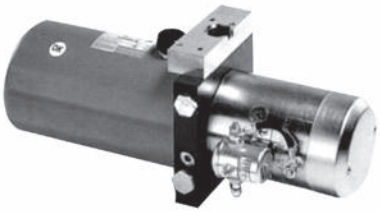

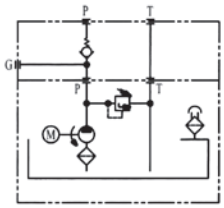

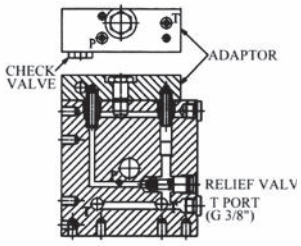

"A" Type+Cetop 03

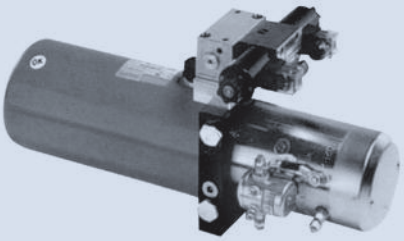

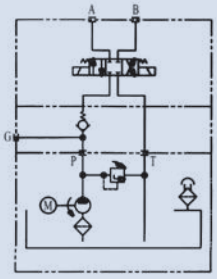

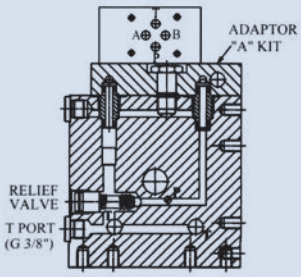

Manifold functions Hi-Lo pressure

"N" Type

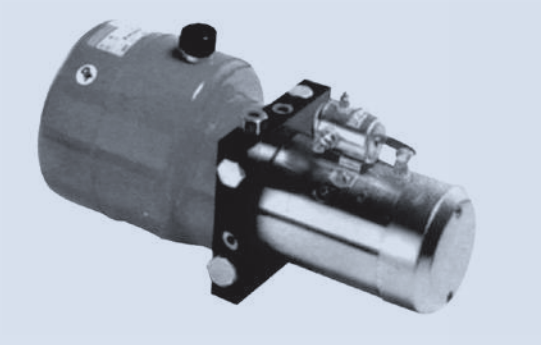

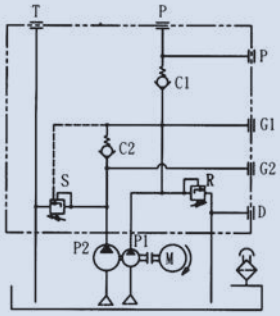

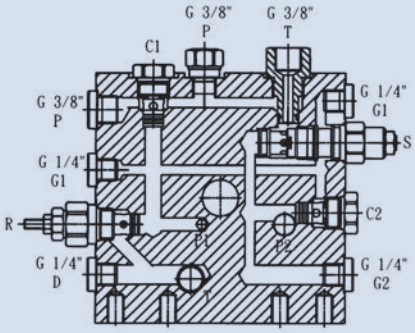

"S" Type

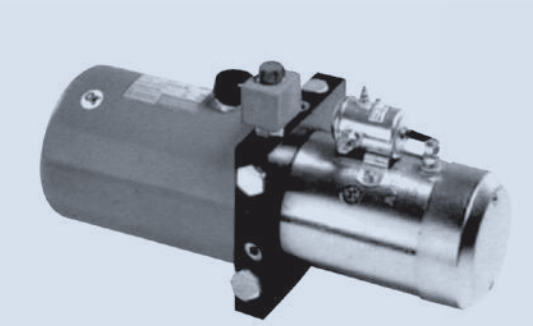

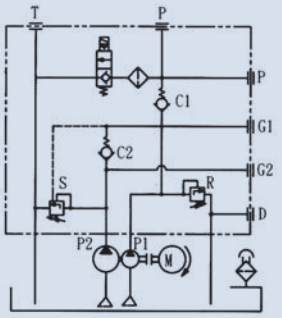

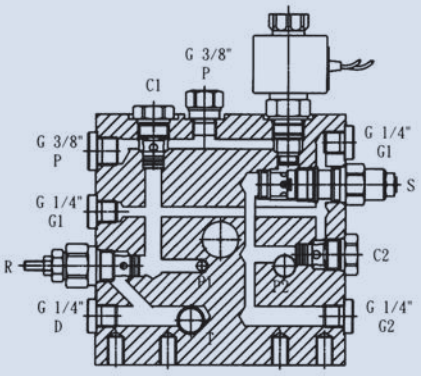

"A" Type+Cetop 03

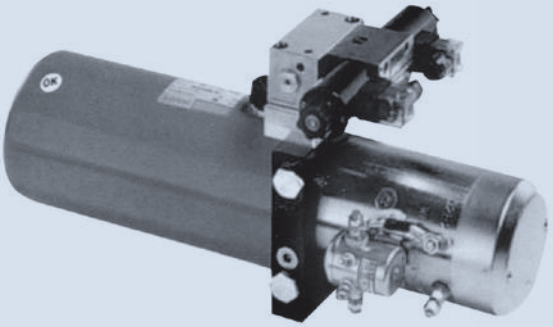

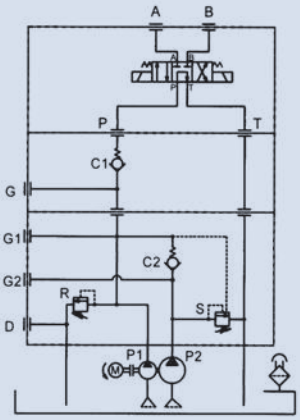

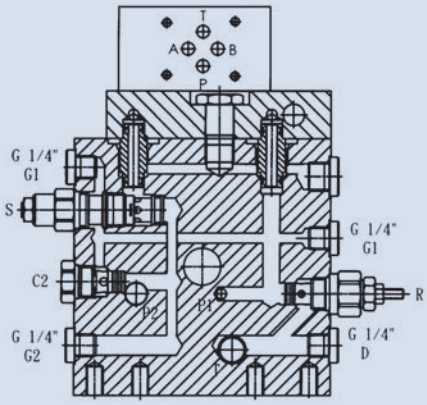

POWER PACK
DC MOTORS

How to order

T - CN24 - H - 10 - S - 10 - A - A - N - D※※※

1 2 3 4 5 6 7 8 9 10

1 Motor Temperature protector

T: With temperature protector N: Without temperature protector

2 DC motor

2				550W Low-speed motor
3				800W Compound wound motor
5				550W Permanent magnet motor
8				800W Permanent magnet motor
C				2000W Compound wound motor (DC24V)
				1500W Compound wound motor (DC12V)
S				2000W Series wound motor (DC24V)
				1500W Series wound motor (DC12V)
L				3000W Compound wound motor (DC24V)
				2500W Compound wound motor (DC12V)
	E			Earth return (motor with 1 terminal)
	N			Insulate return (motor with 2 terminals)
		1	2	DC12V Motor
		2	4	DC24V Motor
N	N	N	N	Without motor
X	X	X	X	Special
P	P	P	P	2200W Compound wound motor (DC24V) 1600W Compound wound motor (DC12V)

3 Mounting type

H: Horizontally mounted V: Vertically mounted X: Special mounting

HN: Horizontally mounted without tank VN: Vertically mounted without tank

4 Tank size

ø140 mm Dia		ø180 mm Dia	
10	1.0 Liters	30	3.0 Liters
16	1.6 Liters	40	4.0 Liters
20	2.0 Liters	50	5.0 Liters
24	2.4 Liters	60	6.0 Liters
28	2.8 Liters	80	8.0 Liters
42	4.2 Liters		

XX: Special
NN: None
(working volume)

5 Lowering valve

S: Solenoid operated (normally closed)
T: Solenoid operated (normally open)
U: Solenoid operated (normally closed with manual)
V: Solenoid operated (normally open with manual)

MR: Manual operated
MK: Manual operated (without switch)
N: None
X: Special operated
A: Adaptor for other manifold

6 Pump capacity

05: 0.5 cc/rev 07: 0.7 cc/rev 10: 1.0 cc/rev 15: 1.5 cc/rev 19: 1.9 cc/rev 23: 2.3 cc/rev
27: 2.7 cc/rev 30: 3.0 cc/rev 35: 3.5 cc/rev 40: 4.0 cc/rev 51: 5.1 cc/rev 62: 6.2 cc/rev 73: 7.3 cc/rev

7 Hand pump

None: Without hand pump P: With hand pump (7.4 cc/stroke) X: Special hand pump assembly

8 Start switch positions

A: Same side as check valve B: Same side as relief valve C: The side opposite A D: The side opposite B N: None

9 Breather cap positions

A: Same side as check valve B: Same side as relief valve C: The side opposite A D: The side opposite B N: None

10 Flow control valve

N: None 2: 2 lpm 4: 4 lpm 6: 6 lpm 8: 8 lpm 10: 10 lpm (Rated flows)

11 Unique code

	Manifold function A-Z
	Standard manifold
D	Standard manifold With low noise relief valve

POWER PACK
AC MOTORS

How to order

MF - □ - 01 - H - 10 - S - 10 - ※ - A - A - N - D※※※

1 2 3 4 5 6 7 8 9 10 11 12

1 AC motor

Motor dimension			
Ø110	MSN	Motor without fan	Only 1/4HP
Ø140	MFS	Motor with fan	From 1/2HP to 1HP
	MSS	Motor without fan	

Motor dimension			
Ø125	MSM	Motor without fan	From 1/2HP to 1HP
Ø160	MF	Motor with fan	From 1HP to 3HP
	MS	Motor without fan	

XX: Special

2 AC motor

	Standard voltages and hertz (refer to below)
A-ZZ	Special voltages and hertz on request

3 AC motor

Motor	Power	Phase	Voltages	Hertz	Rpm
01	1HP 4P	3	220/380	50/60	1420/1720
02	1HP 2P	3	220/380	50/60	2850/3450
03	1HP 4P	1	110/220	50/60	1420/1720
04	1HP 2P	1	110/220	50/60	2850/3450
05	2HP 4P	3	220/380	50/60	1420/1720
06	2HP 2P	3	220/380	50/60	2850/3450
07	2HP 4P	1	110/220	50/60	1420/1720
08	2HP 2P	1	110/220	50/60	2850/3450
09	3HP 4P	3	220/380	50/60	1420/1720

Motor	Power	Phase	Voltages	Hertz	Rpm
10	3HP 2P	3	220/380	50/60	2850/3450
11	1/2HP 4P	1	110/220	50/60	1420/1720
12	1/2HP 2P	1	110/220	50/60	2850/3450
13	3/4HP 4P	1	110/220	50/60	1420/1720
14					
15	1/2HP 4P	3	220/380	50/60	1420/1720
16	1/2HP 6P	3	220/380	50/60	940/1140
17	1/4HP 4P	1	110/220	50/60	1420/1720
18	1/4HP 4P	3	220/380	50/60	1420/1720

4 Mounting type

H: Horizontally mounted V: Vertically mounted X: Special mounting

HN: Horizontally mounted without tank VN: Vertically mounted without tank

5 Tank size

ø140 mm Dia				ø180 mm Dia			
10	1.0 Liters	24	2.4 Liters	30	3.0 Liters	60	6.0 Liters
16	1.6 Liters	28	2.8 Liters	40	4.0 Liters	80	8.0 Liters
20	2.0 Liters	42	4.2 Liters	50	5.0 Liters		

XX: Special
NN: None
(working volume)

6 Lowering valve

S: Solenoid operated (normally closed) T: Solenoid operated (normally open)

U: Solenoid operated (normally closed with manual) V: Solenoid operated (normally open with manual)

MR: Manual operated MK: Manual operated (without switch) N: None X: Special operated A: Adaptor for other manifold

7 Pump capacity

05: 0.5 cc/rev 07: 0.7 cc/rev 10: 1.0 cc/rev 15: 1.5 cc/rev 19: 1.9 cc/rev 23: 2.3 cc/rev

27: 2.7 cc/rev 30: 3.0 cc/rev 35: 3.5 cc/rev 40: 4.0 cc/rev 51: 5.1 cc/rev 62: 6.2 cc/rev 73: 7.3 cc/rev

8 Hand pump

None: Without hand pump P: With hand pump (7.4 cc/stroke) X: Special hand pump assembly

9 Wire box positions

A: Same side as check valve B: Same side as relief valve C: The side opposite A D: The side opposite B N: None

10 Breather cap positions

A: Same side as check valve B: Same side as relief valve C: The side opposite A D: The side opposite B N: None

11 Flow control valve

N: None 2: 2 lpm 4: 4 lpm 6: 6 lpm 8: 8 lpm 10: 10 lpm (rated flows)

12 Unique code

	Manifold function A-Z
	Standard manifold
D	Standard manifold With low noise relief valve

4ManPro

Elements For Manufacturing Processes

HI HYDROME

VÁLVULA DE CONTROL DE FLUJO (FLOW CONTROL VALVE)

THROTTLE VALVE AND THROTTLE WITH CHECK VALVE

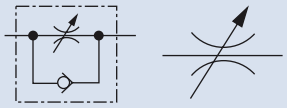

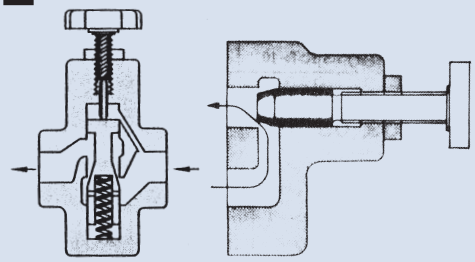

B

How to order

SR C G - 03
1 2 3 4

1	Model
2	With check
3	Mounting type G: Sub-plate mounting T: Thread connection
4	Valve size 03: 3/8" 04: 1/2" 06: 3/4" 10: 1-1/4"

Specifications

Model		Pressure Adj. Range (bar)	Max. Flow (lpm)	Weight (kg)	
Sub-Plate Mounting	Thread Connection			SRG, SRCG	SRT, SRCT
SRG-03 / SRCG-03	SRT-03,04 / SRCT-03, 04	250	30	1.2 / 2.1	1.1 / 1.2
SRG-06 / SRCG-06	SRT-06 / SRCT-06		80	2.4 / 4.0	2.3 / 3.2
SRG-10 / SRCG-10	SRT-10 / SRCT-10		200	4.9 / 8.1	5.8 / 7.2

Dimensions

Unit: mm

SRT-03, 04, 06, 10

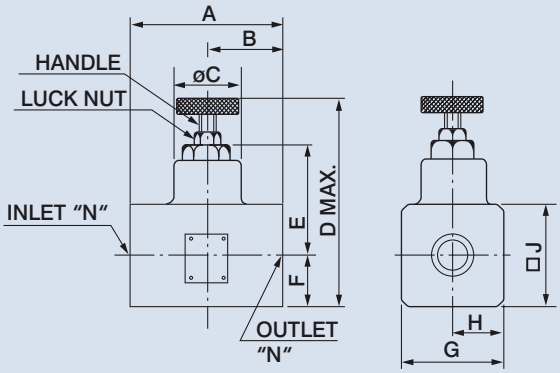

SRCT-03, 04, 06, 10

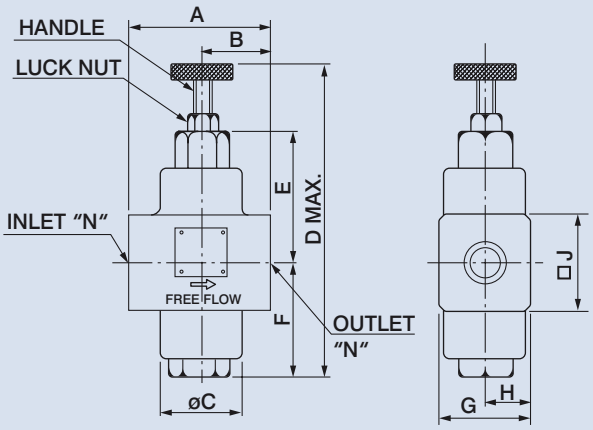

Model	A	B	C	D	E	F	G	H	J	K	L	N
SRT-03, 04	70	35	40	116	54	23	42	20	40	8	19	3/8, 1/2
SRT-06	100	50	40	136.5	62	30	62	30	60	8	19	3/4
SRT-10	130	65	56	173	73	40	82	40	80	10	22	1-1/4
SRCT-03, 04	70	35	40	151	60	58	42	20	40	8	19	3/8, 1/2
SRCT-06	100	50	56	186	83	65	62	30	60	8	19	3/4
SRCT-10	130	65	70	228	106	77	82	40	80	10	22	1-1/4

THROTTLE VALVE AND THROTTLE WITH CHECK VALVE

B

Dimensions

SRG-03, 06, 10

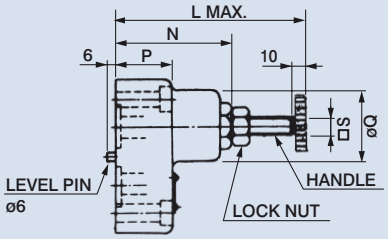

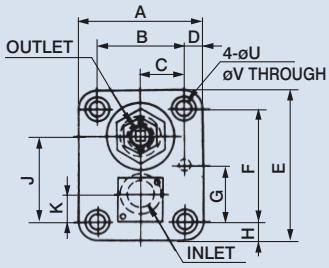

Unit: mm

Model	A	B	C	D	E	F	G	H	J	K	L	N	P	Q	S	U	V
SRG-03	60	40	20	10	80	60	30	10	45	15	100	61	30	40	8	14	8.8
SRG-06	80	58	29	11	92	70	35	11	54	16	117.5	73	42	40	8	17.5	11
SRG-10	100	72	36	14	120	92	46	14	71	21	145	93	55	56	10	21	13.5

SRCG-03, 06, 10

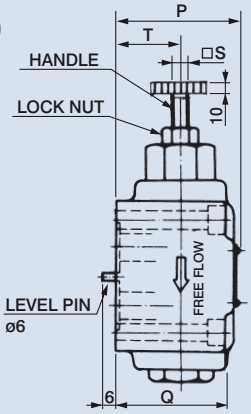

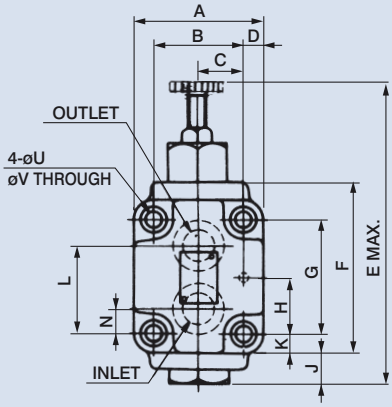

Model	A	B	C	D	E	F	G	H	J	K	L	N	P	Q	S	T	U	V
SRCG-03	60	40	20	10	151	80	60	30	28	10	45	15	62	55	8	35	14	8.8
SRCG-06	80	58	29	11	186	92	70	35	30	11	54	16	74	68	8	40	17.5	11
SRCG-10	100	72	36	14	228	120	92	46	31	14	71	21	97	82	10	50	21	13.5

Subplate SRGM-03

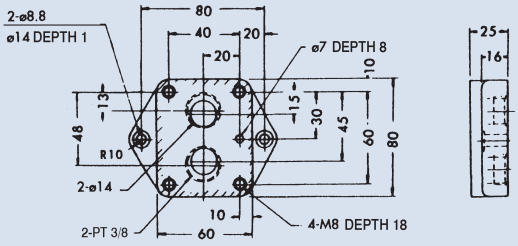

Subplate SRGM-10

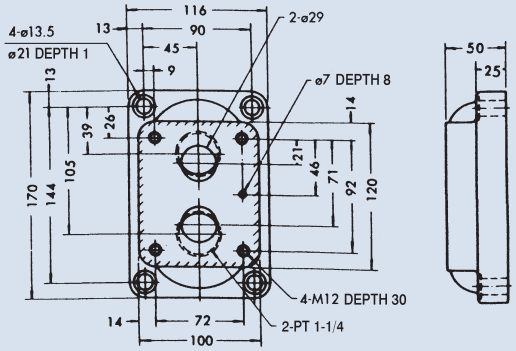

Subplate SRGM-06

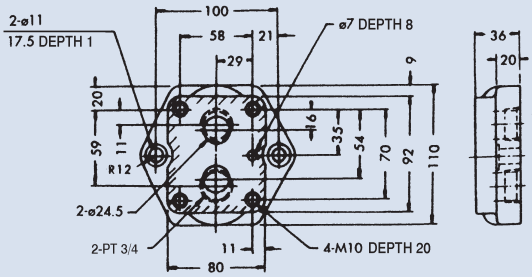

FLOW CONTROL VALVE-PRESSURE AND TEMPERATURE COMPENSATED

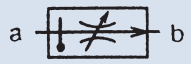

FG

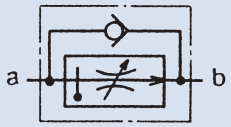

FCG

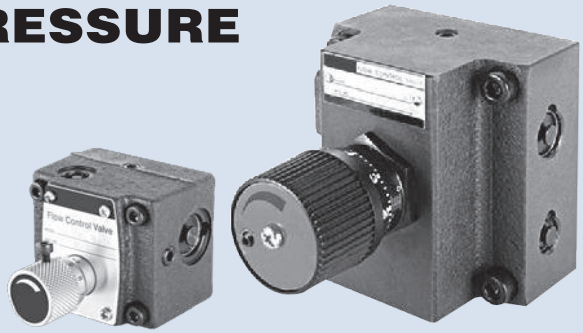

B

How to order

FG
FCG - 02 - 30 - N - 50
1 2 3 4 5

1	Model	FG: Without check FCG: With check
2	Valve size	01, 02
3	Max. flow	01: 8 lpm 02: 30 lpm
4	N: Pressure conpensation-fine adjustable	OMIT: None
5	Design No.	50: Scaled adjusting knob

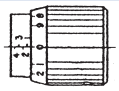

Specifications

Model	Max. Pressure (bar)	Max. Flow (lpm)	Flow Adj. Range (lpm)	Port a	Port b	Weight (kg)
FG-01-8-※	160	8	0.02~8	Oil inlet	Controlled oil outlet	1.4
FCG-01-8-※				Oil inlet or free flow outlet	Free flow inlet or controlled oil outlet	
FG-02-30-※	210	30	0.05~30	Oil inlet	Controlled oil outlet	4.1
FCG-02-30-※				Oil inlet or free flow outlet	Free flow inlet or controlled oil outlet	

Dimensions

Unit: mm

Mounting Bolt

Model	Hexagon	PCS
FG, FCG-01	M5 x 55 L	4
FG, FCG-02	M8 x 50 L	4

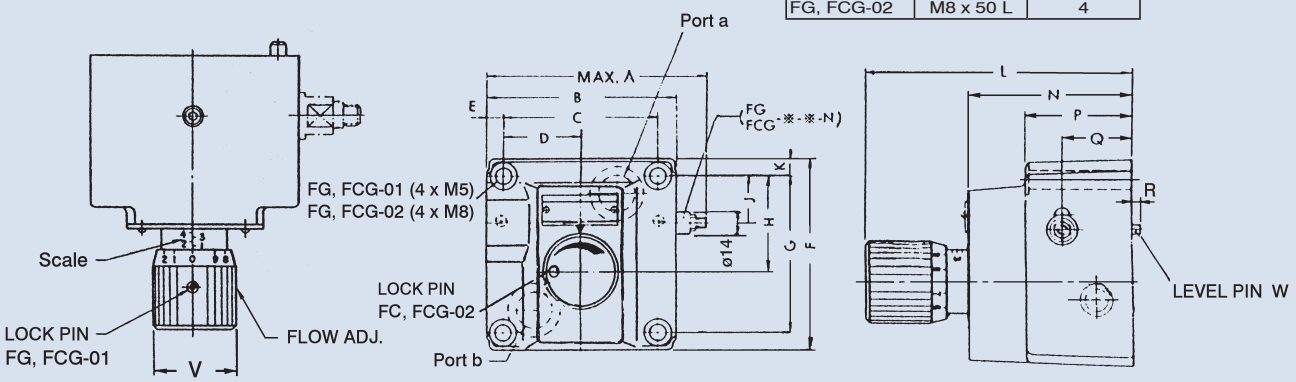

Model	A	B	C	D	E	F	G	H	J	K	L	N	P	Q	R	V	W
FG, FCG-01	81.5	66	51	22.5	7.5	58	43	31	16.5	7.5	84	53.5	45	17	5	22.5	ø4 x 1
FG, FCG-02	116	96	76.2	38.1	9.9	104.5	82.6	44.3	24	9.9	123	69	40	23	6	46	ø6 x 1

DECELERATION VALVE

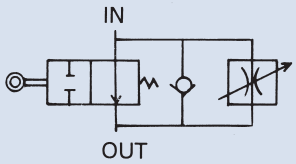

B

How to order

FKC - G - 2 - 02
1 2 3 4

1	Model
2	Mounting type G: Sub-plate mounting
3	Flow adjusting range (lpm) 1: 0.1~1 2: 0.1~2 4: 0.1~4
4	Valve size 1/4"

Specifications

Model	Connection Port (pt)	Flow Adj. Range (lpm)	Free Flow (lpm)	Max. Operating Pressure (bar)	Weight (kg)
FKC-G-1-02	1/4	0.1~1	20	70	1.1
FKC-G-2-02		0.1~2			
FKC-G-4-02		0.1~4			

Dimensions

Unit: mm

SUBPLATE

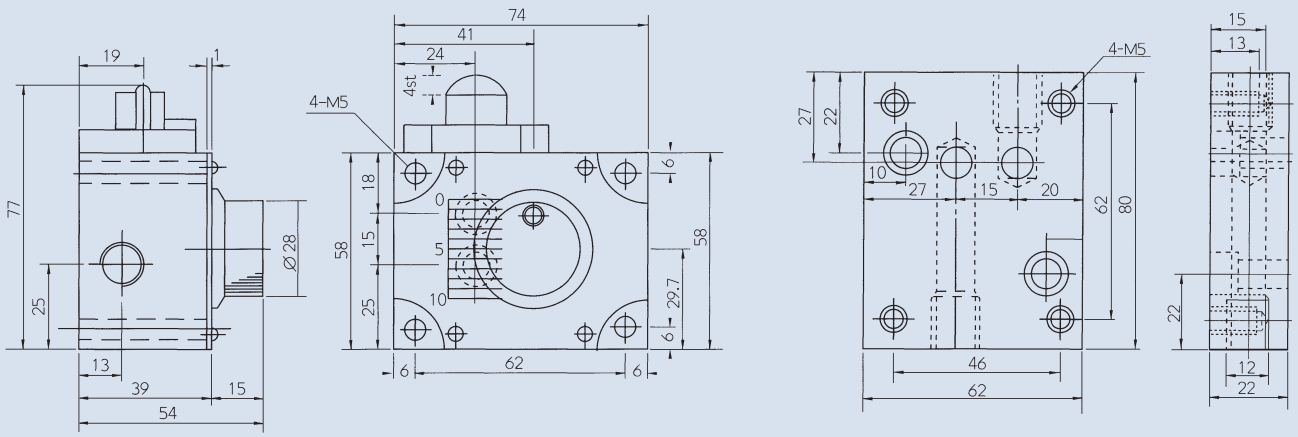

DECELERATION VALVE

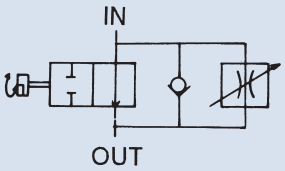

B

How to order

FKC - G - 2 - 02 A※

1 2 3 4 5

1	Model
2	Mounting type G: Sub-plate mounting
3	Flow adjusting range
4	Valve size 02: 1/4" 03: 3/8"
5	Valve type, port position, cam's notch position

Model	In-Out port position
FKC-G-※-02A (AL)	Left-Hand side
FKC-G-※-03 ARI	Right-Hand side
FKC-G-※-03 ALI	Left-Hand side

FKC-G-※-02-※

FKC-G-※-03-※

Specifications

Model	Connection Port (pt)	Flow Adj. Range (lpm)	Free Flow (lpm)	Max. Operating Pressure (bar)	Weight (kg)
FKC-G-1-02A	1/4"	0.1~1	20	70	1.16
FKC-G-2-02A		0.1~2			
FKC-G-4-02A		0.1~4			
FKC-G-2-03A	3/8"	0.1~2	30		1.96
FKC-G-4-03A		0.1~4			
FKC-G-8-03A		0.1~8			

Dimensions

Unit: mm

FKC-G02-02A(AL)

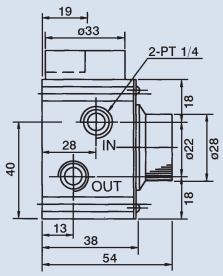

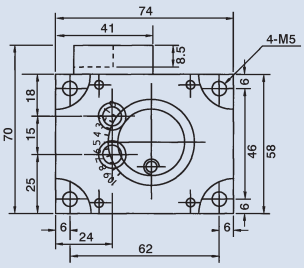

FKC-G03-03ARI

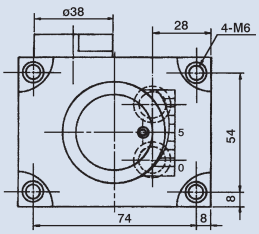

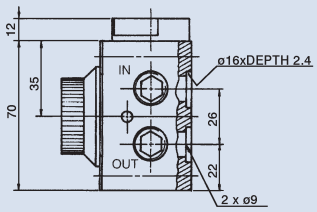

DECELERATION VALVE

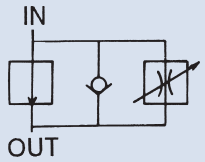

B

How to order

FKC - G - 2 - 02 B

1 2 3 4 5

1	Model
2	Mounting type G: Sub-plate mounting
3	Flow adjusting range
4	Valve size 02: 1/4" 03: 3/8"
5	Valve type

Specifications

Model	Connection Port (pt)	Flow Adj. Range (lpm)	Free Flow (lpm)	Max. Operating Pressure (bar)	Weight (kg)
FKC-G-1-02B	1/4"	0.1~1	20	70	1
FKC-G-2-02B		0.1~2			
FKC-G-4-02B		0.1~4			
FKC-G-2-03B	3/8"	0.1~2	30		1.9
FKC-G-4-03B		0.1~4			
FKC-G-8-03B		0.1~8			

Dimensions

Unit: mm

FKC-G02-02B

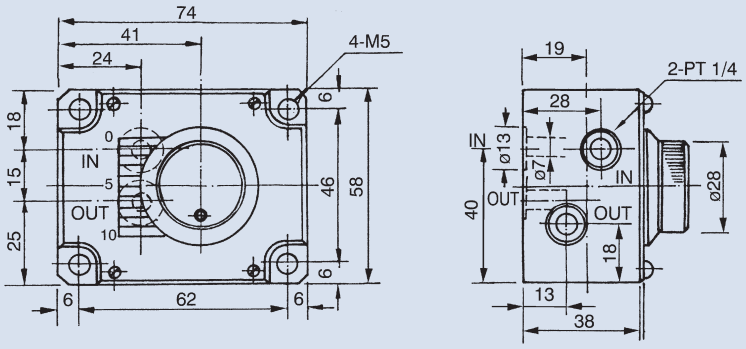

FKC-G03-03B

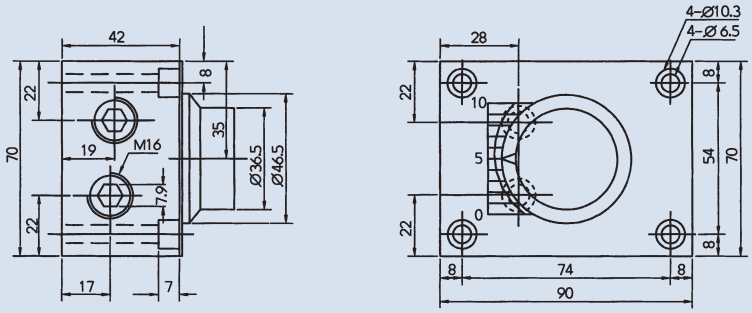

DOUBLE DECELERATION VALVE

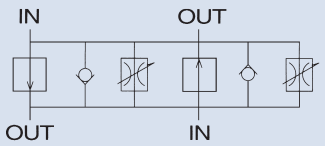

B

How to order

FKC - G - 2 - 02 B 2

1 2 3 4 5 6

1	Model
2	Mounting type G: Sub-plate mounting
3	Flow adjusting range (lpm) 1: 0.1~1 2: 0.1~2 4: 0.1~4
4	Valve size 1/4"
5	Valve type
6	Double type

Specifications

Model	Connection Port (pt)	Flow Adj. Range (lpm)	Free Flow (lpm)	Max. Operating Pressure (bar)	Weight (kg)
FKC-G-1-02B2	1/4"	0.1~1	20	70	1.32
FKC-G-2-02B2		0.1~2			
FKC-G-4-02B2		0.1~4			

Dimensions

Unit: mm

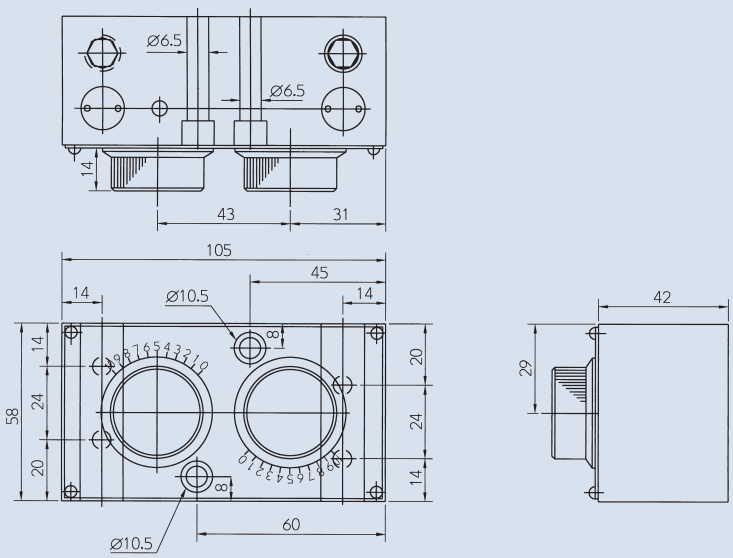

DECELERATION VALVE

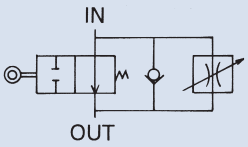

B

How to order

FPR-MGK - 8 - 03

1 2 3

1	Model Sub-plate mounting
2	Flow adjusting range (lpm) 2: 0.1~2 4: 0.1~4 8: 0.1~8 12: 0.1~12
3	Valve size 3/8"

Specifications

Model	Connection Port (pt)	Flow Adj. Range (lpm)	Free Flow (lpm)	Max. Operating Pressure (bar)	Weight (kg)
FPR-MGK-2-03	3/8"	0.1~2	30	70	2.16
FPR-MGK-4-03		0.1~4			2.16
FPR-MGK-8-03		0.1~8			2.16
FPR-MGK-12-03		0.1~12			2.16

Dimensions

Unit: mm

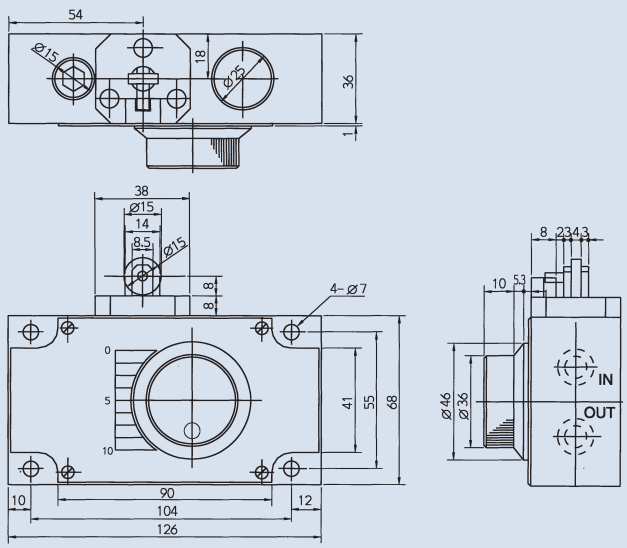

SUBPLATE

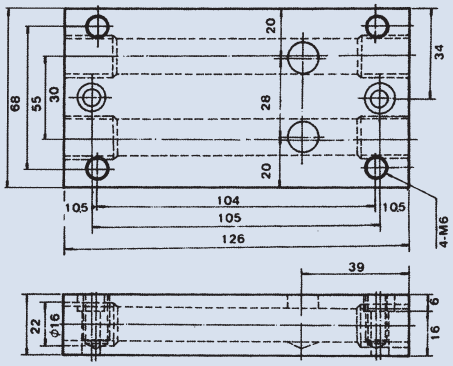

DECELERATION VALVE

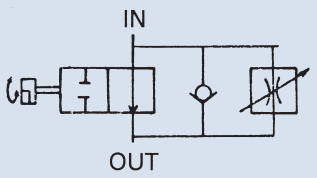

B

How to order

FPR-MGK - 8 - 03 AR

1 2 3 4

1	Model Sub-plate mounting
2	Flow adjusting range (lpm) 2: 0.1~2 4: 0.1~4 8: 0.1~8 12: 0.1~12
3	Valve size 3/8"
4	Valve type

Specifications

Model	Connection Port (pt)	Flow Adj. Range (lpm)	Free Flow (lpm)	Max. Operating Pressure (bar)	Weight (kg)
FPR-MGK-2-03AR	3/8"	0.1~2	30	70	2.21
FPR-MGK-4-03AR		0.1~4			2.21
FPR-MGK-8-03AR		0.1~8			2.21
FPR-MGK-12-03AR		0.1~12			2.21

Dimensions

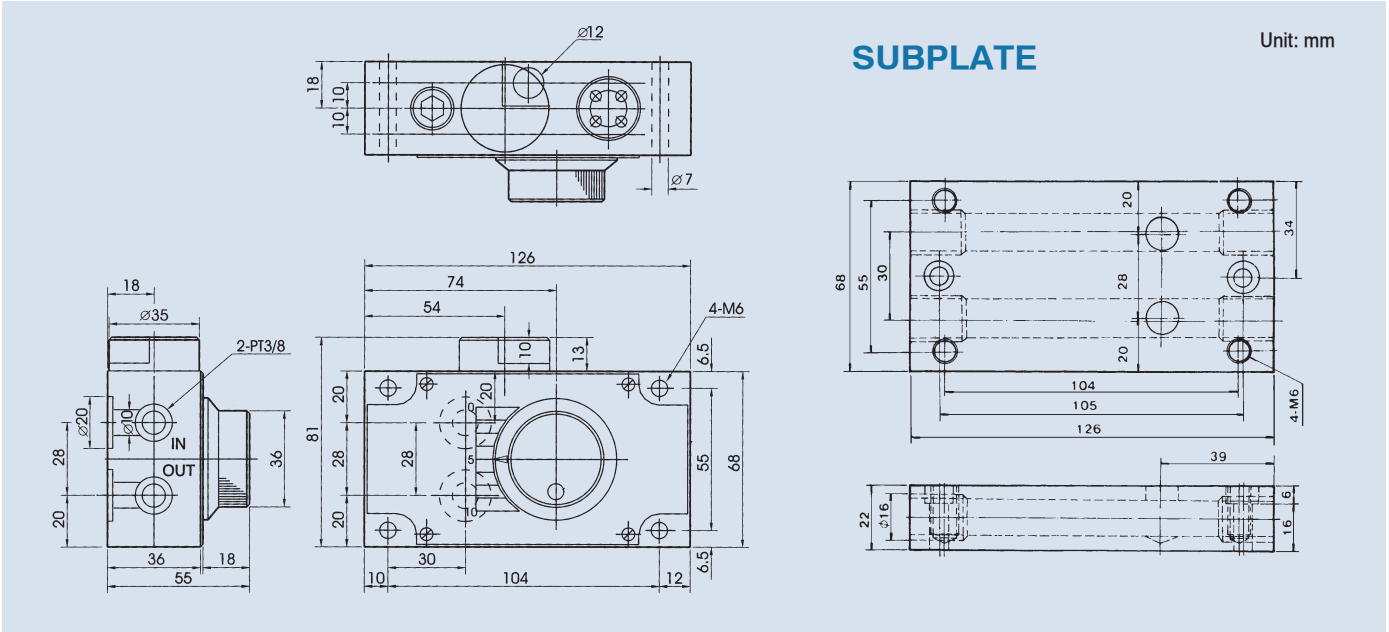

DECELERATION VALVE

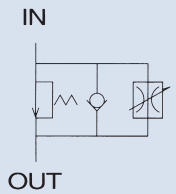

B

How to order

FPR-MGK - 8 - 03 B

1 2 3 4

1	Model Sub-plate mounting
2	Flow adjusting range (lpm) 2: 0.1~2 4: 0.1~4 8: 0.1~8 12: 0.1~12
3	Valve size 3/8"
4	Valve type

Specifications

Model	Connection Port (pt)	Flow Adj. Range (lpm)	Free Flow (lpm)	Max. Operating Pressure (bar)	Weight (kg)
FPR-MGK-2-03B	3/8"	0.1~2	30	70	2.16
FPR-MGK-4-03B		0.1~4			2.16
FPR-MGK-8-03B		0.1~8			2.16
FPR-MGK-12-03B		0.1~12			2.16

Dimensions

Unit: mm

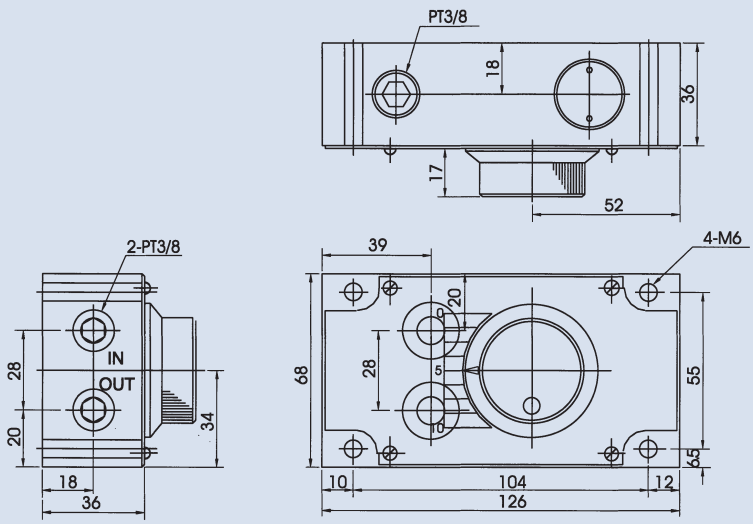

DECELERATION CHECK VALVE

NORMALLY OPEN

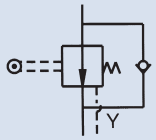

NORMALLY CLOSED

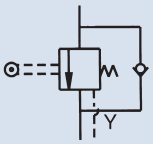

ZCT

ZCG

B

How to order

ZC - T 03 - ※

1 2 3 4

1	Model
2	Mounting type G: Sub-plate mounting T: Thread connection
3	Valve size 03: 3/8" 06: 3/4"
4	Omit: Normal open C: Normal closed

Specifications

Model		Max. Operating Pressure (bar)	Max. Flow (lpm)	Weight (kg)		Bolt size ZC-G※※
Sub-Plate Mounting	Thread Connection					
ZC-G03	ZC-T03	230	30	5.4	5	M8 x 75L
ZC-G06	ZC-T06		85	9	5.4	M10 x 100L

Dimensions

ZC-T03, 06

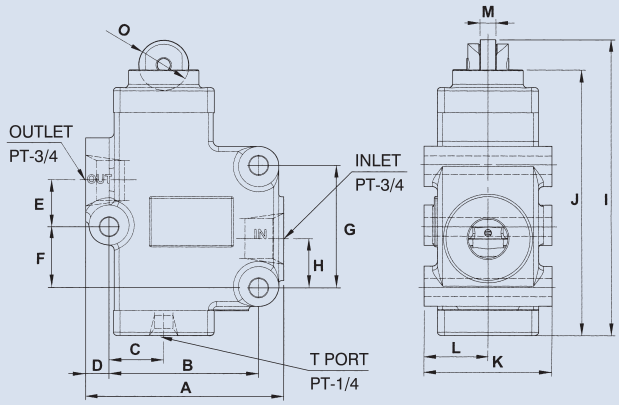

Model	A	B	C	D	E	F	G
ZC-T03	116	84	31	16	34	16	68
ZC-T06	118	90	33	13.5	28	35	73

Model	H	I	J	K	L	M	O
ZC-T03	26	161	144.5	68	34	8	27
ZC-T06	29	176.5	158.5	76	38	9.5	30

ZC-G06

Unit: mm

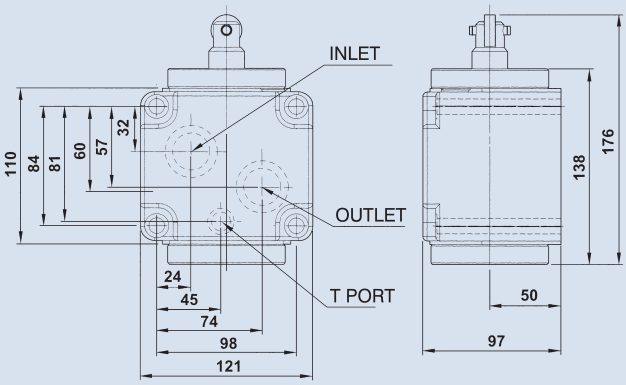

SOLENOID OPERATED DECELERATION VALVE

SINGLE TYPE

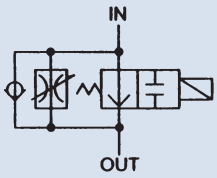

DUBLE TYPE

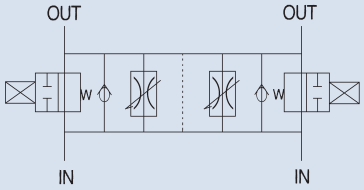

B

How to order

FKCS - 6 - 03 - S2 - ※

1 2 3 4 5

1	Model Sub-plate mounting
2	Flow adjusting range
3	Valve size 02: 1/4" 03: 3/8"
4	Omit: Single type S2: Double type
5	Voltage A1: AC110V (60HZ) A2: AC220V (60HZ) A3: AC110V (50HZ) A4: AC220V (50HZ) D1: DC12V D2: DC24V

Specifications

Model	Flow Adj. Range (lpm)		Free Flow (lpm)	Max. Operating Pressure (bar)	Weight (kg)
	1 st feed	2nd feed			
FKCS-4-03S2	0.1~4	0.1~2	30	70	8.52
FKCS-6-03S2	0.1~6	0.1~4			
FKCS-2-03	0.1~2				2.84
FKCS-4-03	0.1~4				
FKCS-6-03	0.1~6				
FKCS-2-02	0.1~2		20		1.9
FKCS-4-02	0.1~4				
FKCS-6-02	0.1~6				

Dimensions

Unit: mm

FKCS-※-02

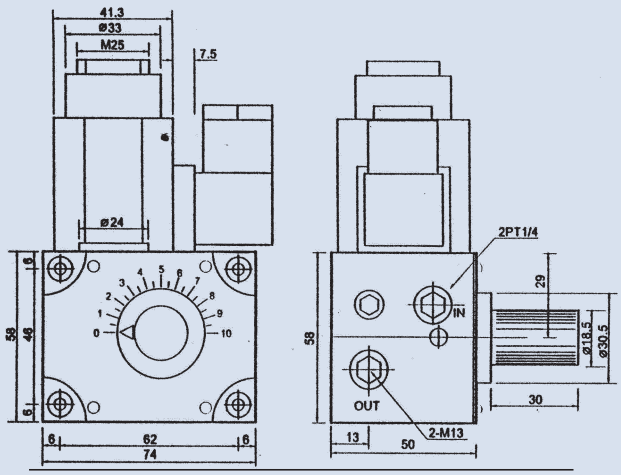

FKCS-※-03-S2

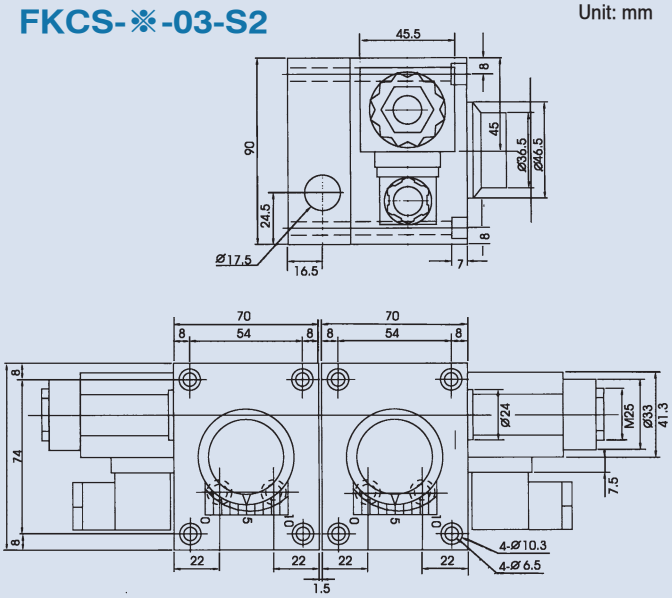

SOLENOID OPERATED DECELERATION VALVE

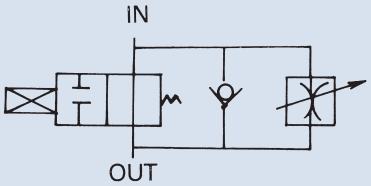

B

How to order

FPR-MGKS - 8 - 03 - ※

1 2 3 4

1	Model Sub-plate mounting
2	Flow adjusting range (lpm) 2: 0.1~2 4: 0.1~4 8: 0.1~8 12: 0.1~12
3	Valve size 3/8"
4	Voltage A1: AC110V (60HZ) A2: AC220V (60HZ) A3: AC110V (50HZ) A4: AC220V (50HZ) D1: DC12V D2: DC24V

Specifications

Model	Flow Adj. Range (lpm)	Free Flow (lpm)	Max. Operating Pressure (bar)	Weight (kg)
FPR-MGKS-2-03	0.1~2	30~60	70~140	3.2
FPR-MGKS-4-03	0.1~4			3.2
FPR-MGKS-8-03	0.1~8			3.2
FPR-MGKS-12-03	0.1~12			3.2

Dimensions

Unit: mm

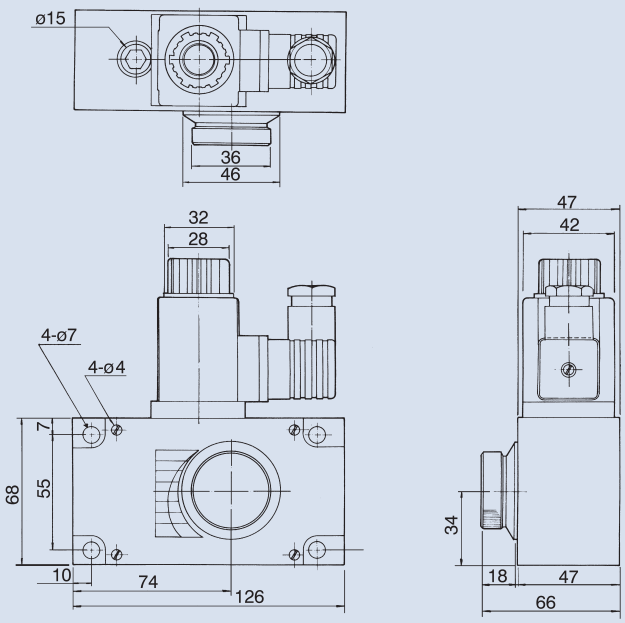

FLOW CONTROL VALVE

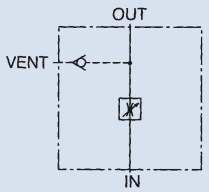

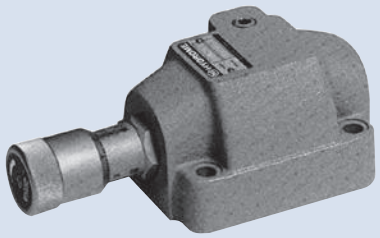

B

How to order

THF - G 06
1 2 3

1	Model
2	Mounting type G: Sub-plate mounting
3	Valve size 06: 3/4" 10: 1-1/4"

Specifications

Model	Max. Operating Pressure (bar)	Max. Flow (lpm)	Weight (kg)	Bolt size
THF-G06	250	125	5.5	M10 x 45L
THF-G10		240	8.4	M12 x 45L

Dimensions

Unit: mm

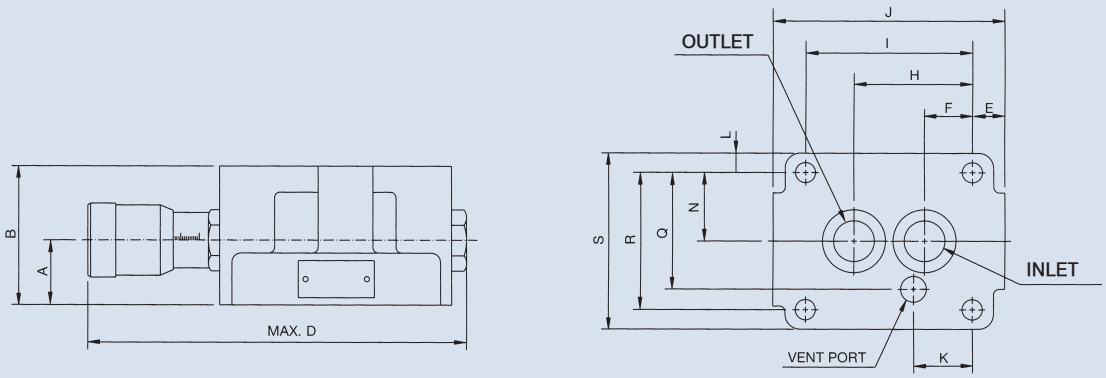

Model	A	B	C	D	E	F	H	I	J	K	L	N	Q	R	S
THF-G06	35	75	ø26	209	17.5	26	64	90	125	31.7	10.5	37	63	74	95
THF-G10	40	86	ø29	248	19	34	78	112	150	37.9	14.5	43	76	86	115

SOLENOID OPERATED FLOW CONTROL VALVE

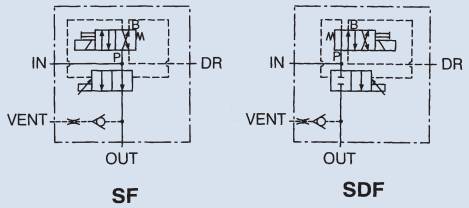

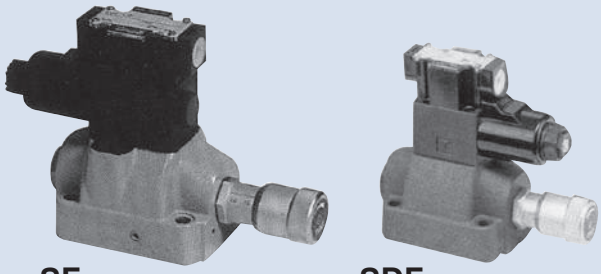

B

How to order

SF, SDF - 06
1 2

1	Model
2	Valve size 03: 3/8" 06: 3/4" 10: 1-1/4"

Specifications

Model	Max. Operating Pressure (bar)	Max. Flow (lpm)	Weight (kg)	Bolt size
SF-03	250	120	2.9	M6 x 65L
SF-06		150	5.7	M10 x 45L
SF-10		240	8.7	M12 x 55L
SDF-03		120	2.9	M6 x 65L
SDF-06		150	5.7	M10 x 45L
SDF-10		240	8.7	M12 x 55L

Dimensions

Unit: mm

SF

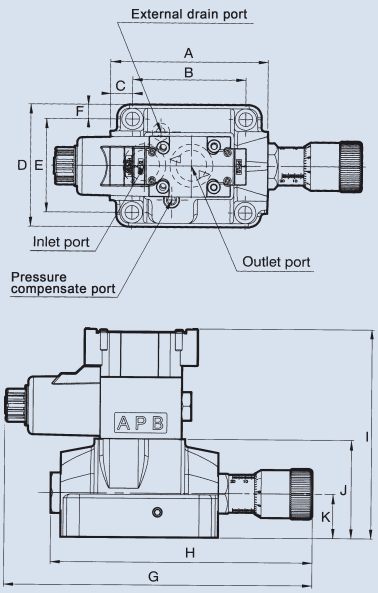

Model	A	B	C	D	E	F	G	H	I	J	K
SF-03	108	60	24	70	40	15	237	168	149	62	31
SF-06	125	90	17.5	97	74	11.5	245	208	166	78	35
SF-10	150	112	19	116	86	15	281	246	176	88	42

SDF

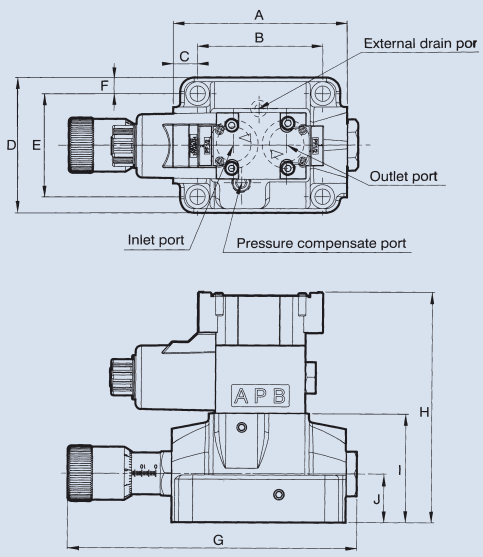

Model	A	B	C	D	E	F	G	H	I	J
SDF-03	108	60	24	70	40	15	168	149	62	31
SDF-06	125	90	17.5	97	74	11.5	208	166	78	35
SDF-10	150	112	19	116	86	15	246	176	88	42

SOLENOID OPERATED FLOW CONTROL VALVE

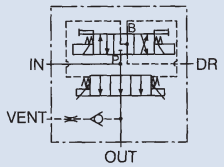

SKFG

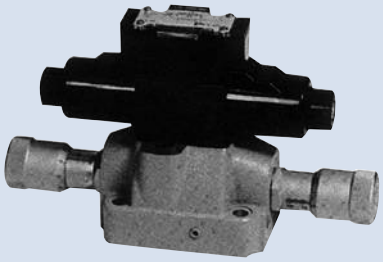

B

How to order

SKFG - 06

1 2

1	Model
2	Valve size 06: 3/4" 10: 1-1/4"

Specifications

Model	Max. Operating Pressure (bar)	Max. Flow (lpm)	Weight (kg)	Bolt size
SKFG-06	230	125	7.2	M10 x 45L
SKFG-10		240	11	M12 x 55L

Dimensions

Unit: mm

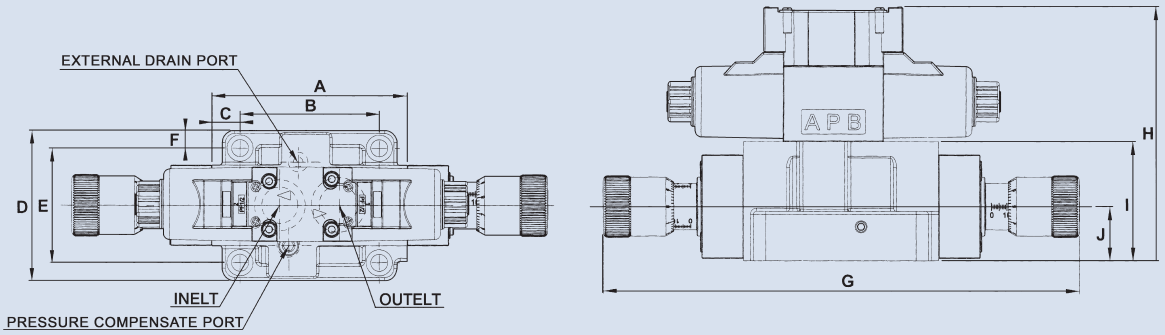

Model	A	B	C	D	E	F	G	H	I	J
SKFG-06	126	90	18	97	74	11.5	308	164	77	35
SKFG-10	150	112	19	116	86	15	406	175	88	42

4ManPro
Elements For Manufacturing Processes

HI HYDROME

VÁLVULA DE CONTROL DE PRESION (PRESSURE CONTROL VALVE)

DIRECT OPERATED TYPE RELIEF VALVE

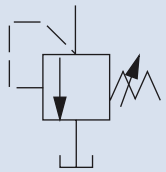

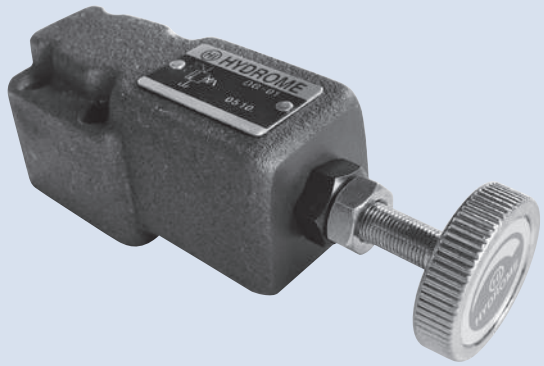

A

How to order

D G - 01 - H
1 2 3 4

1	Model
2	Mounting type G: Sub-plate mounting T: Thread connection
3	Valve size 01: 1/8" remote control 02: 1/4" relief valve
4	Pressure adjusting range B: 5~70 bar C: 10~140 bar H: 35~230 bar 2H: 140~320 bar (for 01)

Specifications

Model		Max. Operating Pressure(bar)	Pressure Adj. Range (bar)	Max. Flow (ipm)	Weight (kg)	Bolt Size DG-※※
Sub-Plate Mounting	Thread Connection					
DG-01	DT-01	300	B: 5~70, C: 10~140, H: 35~230, 2H: 140~320	2	1.5	M5 x 40L
DG-02	DT-02	250	B: 5~70, C: 10~140, H: 35~230	16	1.6	M5 x 45L

DG-01-※-K Is linked type remote control relief valve for low backpressure using.

Dimensions

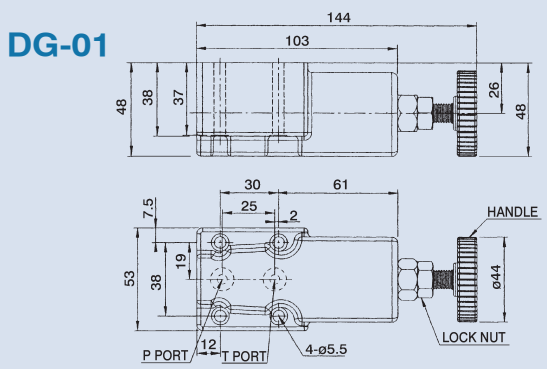

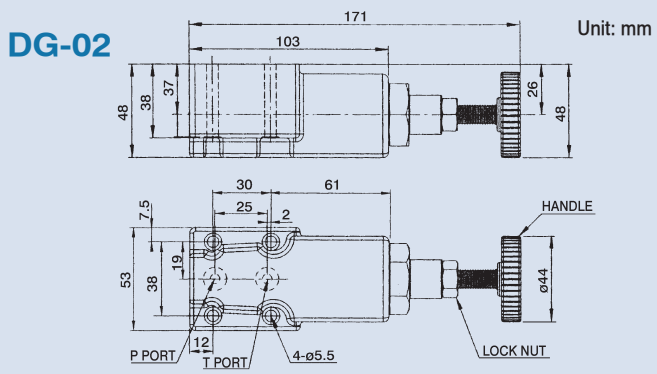

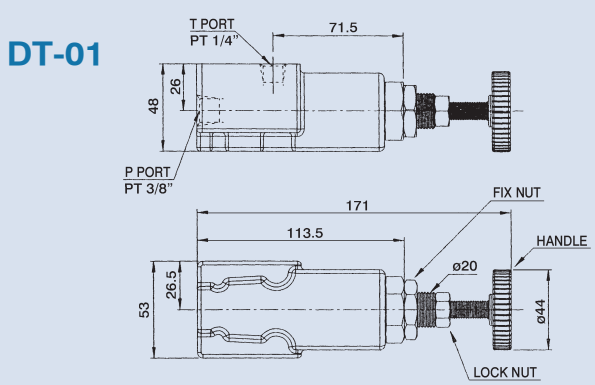

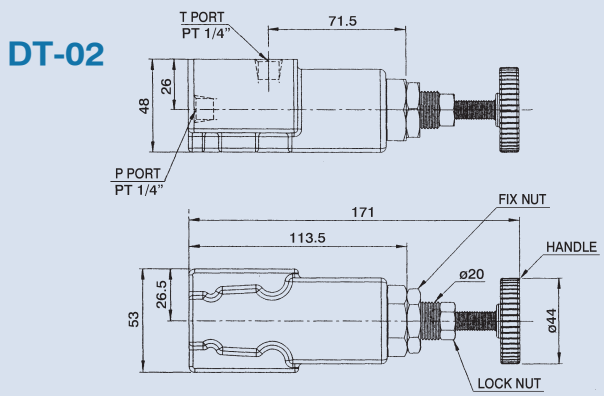

BALANCE PISTON TYPE PILOT OPERATED RELIEF VALVE

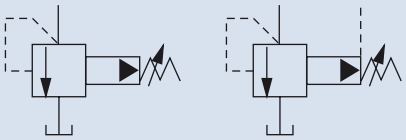

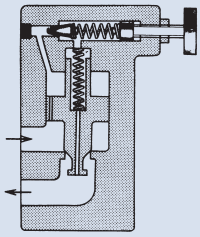

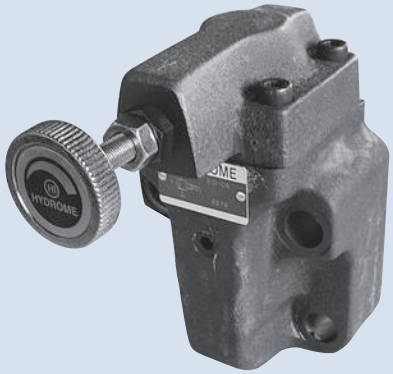

A

How to order

B G - 06 - H

1 2 3 4

1	Model
2	Mounting type G: Sub-plate mounting
3	Valve size 03: 3/8" 06: 3/4" 10: 1-1/4"
4	Pressure adjusting range B: 5~70 bar C: 10~140 bar H: 35~230 bar 2H: 140~320 bar

Specifications

Model	Max. Operating Pressure (bar)	Pressure Adj. Range (bar)	Max. Flow (lpm)	Weight (kg)	Bolt Size
BG-03	300	B: 5~70 C: 10~140 H: 35~230 2H: 140~320	100	5	M12 x 70L x 2pcs M12 x 90L x 2pcs
BG-06			200	6.2	M16 x 55L x 2pcs M16 x 75L x 2pcs
BG-10			400	10	M20 x 70L x 2pcs M20 x 90L x 2pcs

Dimensions

Unit: mm

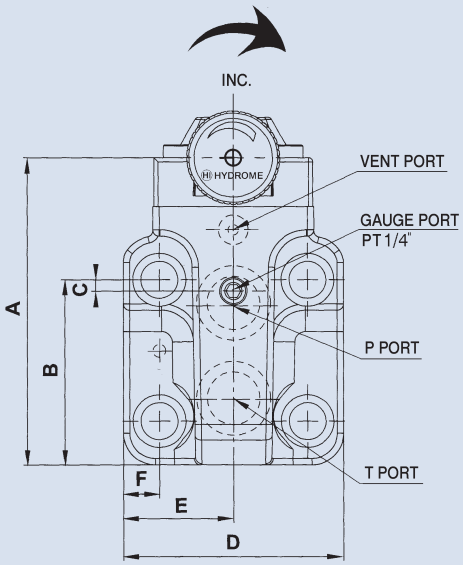

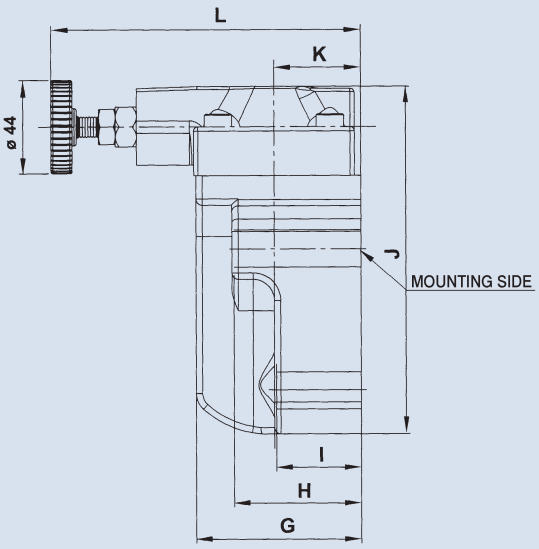

Model	A	B	C	D	E	F	G	H	I	J	K	L
BG-03	117	75.5	21.5	83	41.5	14.5	78	77.5	58.5	136	41	146
BG-06	145	87.5	5.5	104	52	17	78	60	40	164	41	146
BG-10	175	106	8	125	62.5	21.2	90	69.5	49.5	195	46	155

BALANCE PISTON TYPE PILOT OPERATED RELIEF VALVE

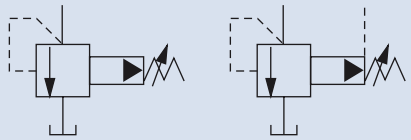

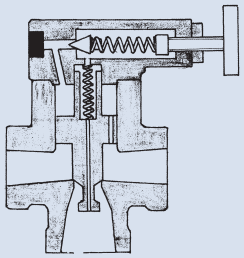

A

How to order

B T - 06 - H
1 2 3 4

1	Model
2	Mounting type T: Thread connection
3	Valve size 03: 3/8" 04: 1/2" 06: 3/4" 10: 1-1/4"
4	Pressure adjusting range B: 5~70 bar C: 10~140 bar H: 35~230 bar 2H: 140~320 bar

Specifications

Model	Max. Operating Pressure (bar)	Pressure Adj. Range (bar)	Max. Flow (lpm)	Weight (kg)
BT-03	300	B: 5~70	60	2.5
BT-04		C: 10~140	100	2.5
BT-06		H: 35~230	200	4
BT-10		2H: 140~320	400	8.5

Dimensions

Unit: mm

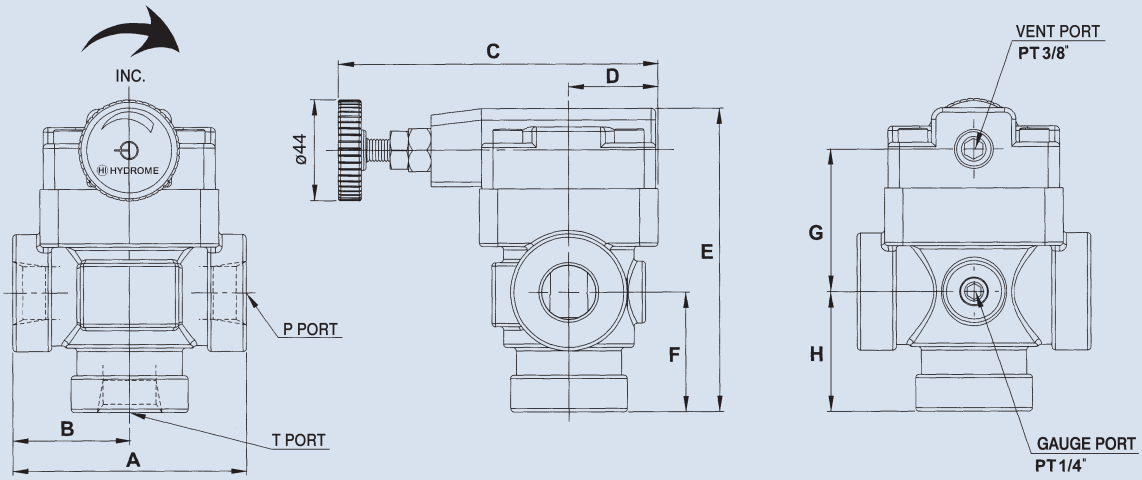

Model	A	B	C	D	E	F	G	H
BT-03	77	38.5	132	31.5	123	42	65	42
BT-06	102	51	140	39	132	52	62	52
BT-10	140	70	152	48	191	84	86	82

BALANCE PISTON TYPE PILOT OPERATED RELIEF VALVE

Performance curves

BT / BG series Test Fluid Viscosity: 35 CST

BT-03, BG-03

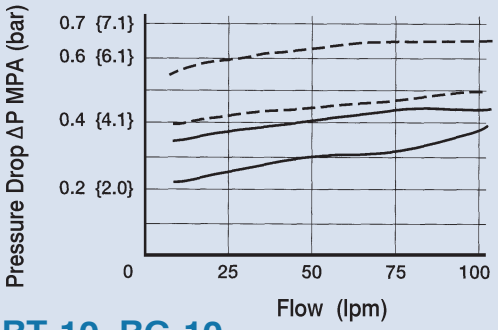

BT-06, BG-06

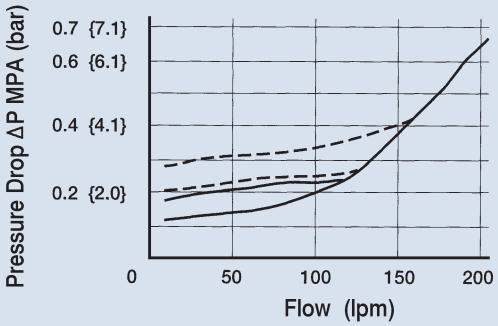

BT-10, BG-10

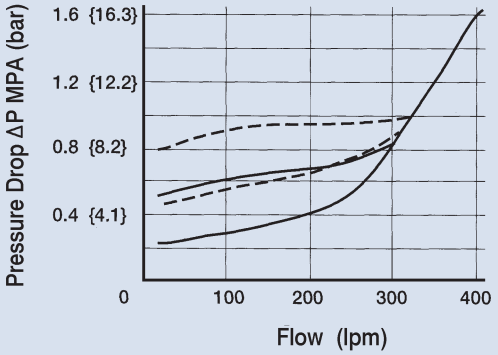

BT-03, BG-03

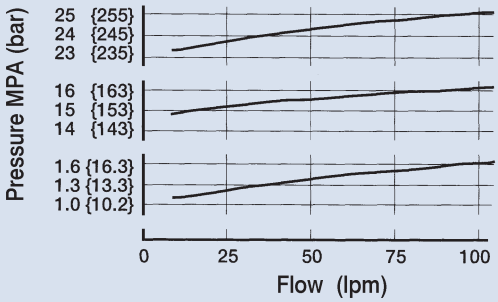

BT-06, BG-06

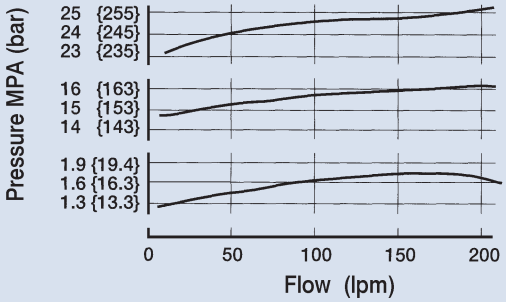

BT-10, BG-10

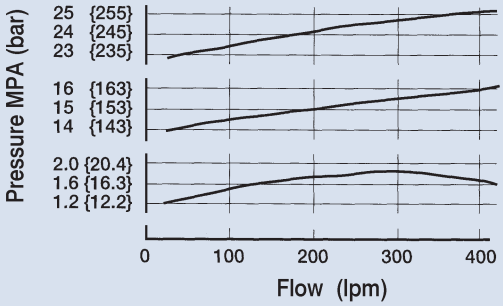

A

BALANCE PISTON TYPE PILOT OPERATED RELIEF VALVE

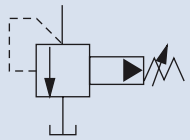

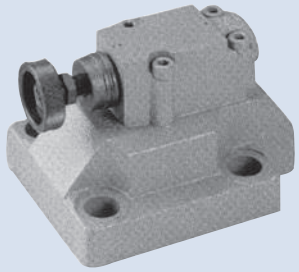

A

How to order

DB - 10 - ※

1 2 3

1	Model Sub-plate mounting
2	Valve size 10: 3/8" 20: 3/4" 30: 1-1/4"
3	Pressure adjusting range B: 5~70 bar C: 7~140 bar H: 35~230 bar 2H: 140~330 bar

Specifications

Model	Max. Operating Pressure (bar)	Pressure Adj. Range (bar)	Max. Flow (lpm)	Weight (kg)	Bolt Size
DB-10	350	B: 5~70 C: 7~140 H: 35~230 2H: 140~330	150	3.5	M12 x 40L
DB-20			250	4.5	M16 x 45L
DB-30			500	6	M20 x 55L

Dimensions

Unit: mm

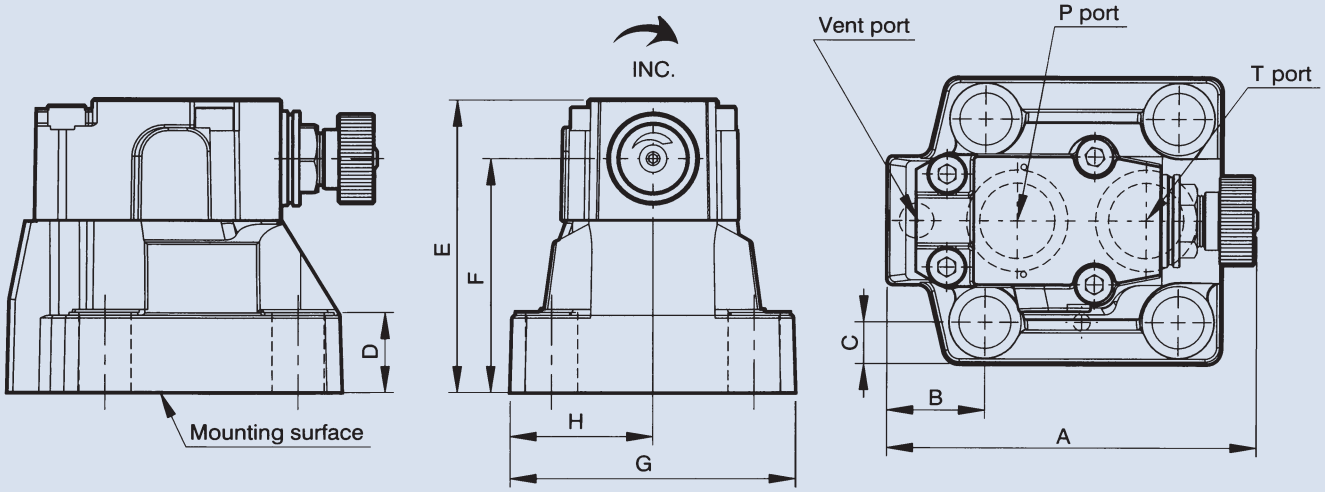

Model	A	B	C	D	E	F	G	H
DB-10	120	27.2	12.1	27	103.6	83.5	78	39
DB-20	126.5	33.8	14.25	27.5	100.6	80.5	98.5	49.25
DB-30	150	42	15.9	29	103.6	83.5	114.5	57.25

BALANCE PISTON TYPE PILOT OPERATED RELIEF VALVE

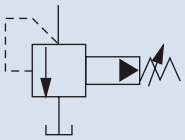

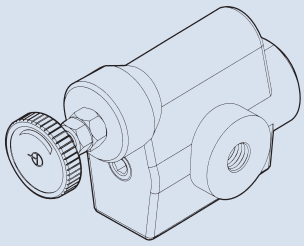

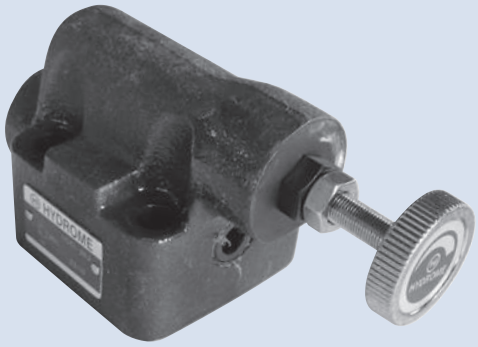

A

How to order

HDRI - G 03 - ※

1 2 3 4

1	Model
2	Mounting type G: Sub-plate mounting T: Thread connection
3	Valve size 3/8"
4	Pressure adjusting range 1: 5~70 bar 2: 35~230 bar

Specifications

Model		Max. Operating Pressure (bar)	Pressure Adj. Range (bar)	Max. Flow (ipm)	Weight (kg)		Bolt Size HDRI-G03
Sub-Plate Mounting	Thread Connection				G Type	T Type	
HDRI-G03	HDRI-T03	250	1: 5~70 2: 35~230	100	3.5	3	M10 x 55L

Dimensions

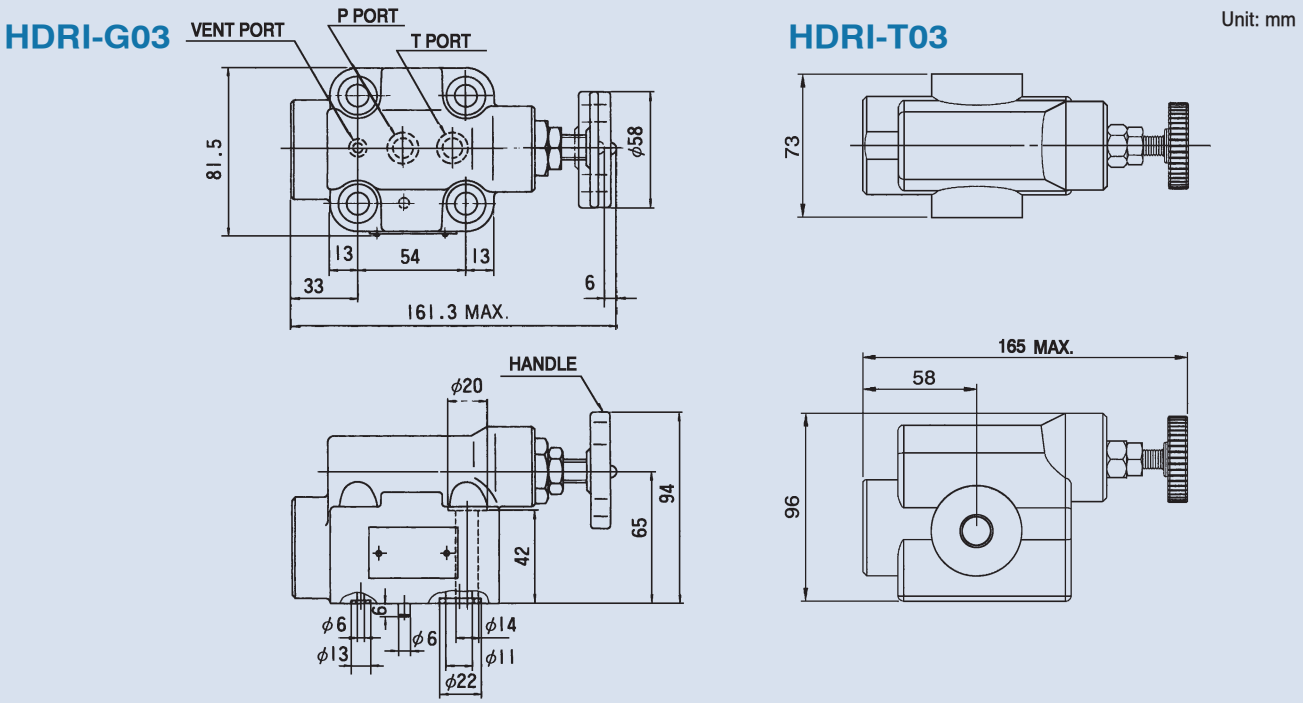

LOW NOISE TYPE PILOT OPERATED RELIEF VALVE

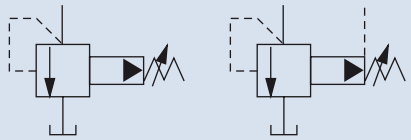

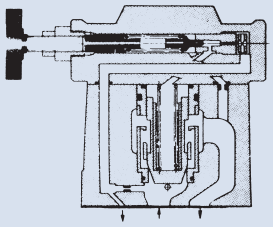

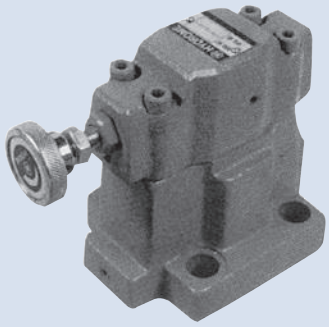

A

How to order

SB G - 06 - H - R
1 2 3 4 5

1	Model
2	Mounting type G: Sub-plate mounting
3	Valve size 03: 3/8" 06: 3/4" 10: 1-1/4"
4	Pressure adjusting range B: 5~70 bar C: 10~140 bar H: 35~230 bar 2H: 140~320 bar
5	Handle position R: Handle at P port (standard, no remarking) L: Handle at T port

Specifications

Model	Max. Operating Pressure (bar)	Pressure Adj. Range (bar)	Max. Flow (lpm)	Weight (kg)	Bolt Size
SBG-03	300	B: 5~70 C: 10~140 H: 35~230 2H: 140~320	100	4.7	M12 x 40L
SBG-06			200	6	M16 x 45L
SBG-10			400	9.5	M20 x 60L

Dimensions

Unit: mm

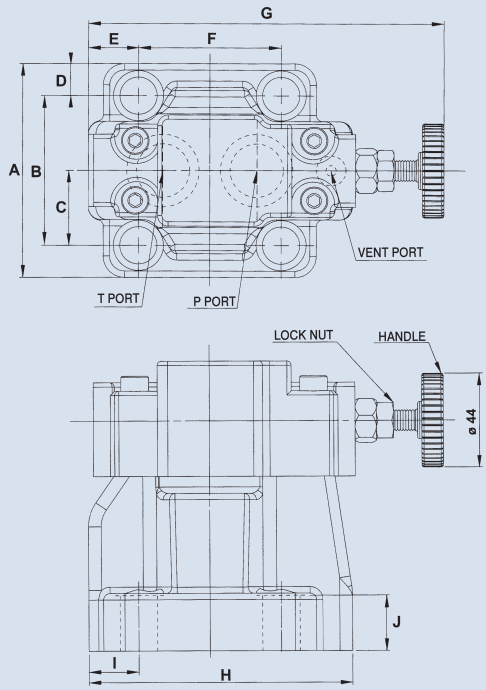

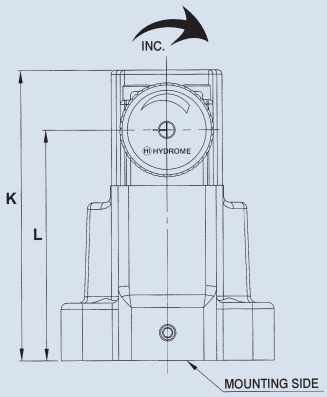

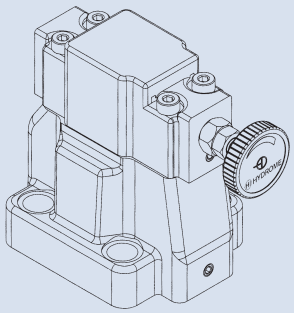

Model	A	B	C	D	E	F
SBG-03	78	54	27	12	34.5	54
SBG-06	100	70	35	15	23.5	67
SBG-10	127	82.6	41.3	22.2	20.5	89

Model	G	H	I	J	K	L
SBG-03	165	107	26.5	23	134	106
SBG-06	167	124	23.5	26	136	108
SBG-10	185	155	20.5	36	145	120

LOW NOISE TYPE PILOT OPERATED RELIEF VALVE

Performance curves

SBG series **Test Fluid Viscosity: 35 CST**

Unit: mm

SBG-03

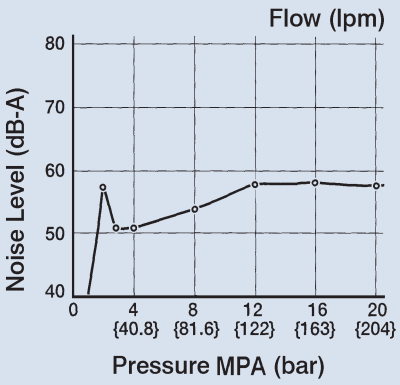

SBG-06

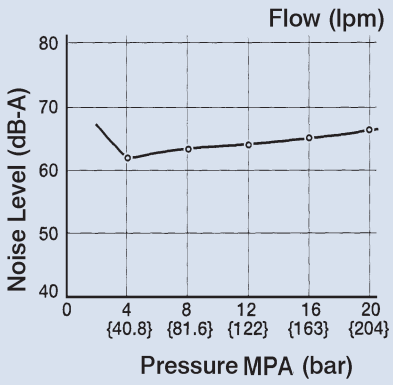

SBG-10

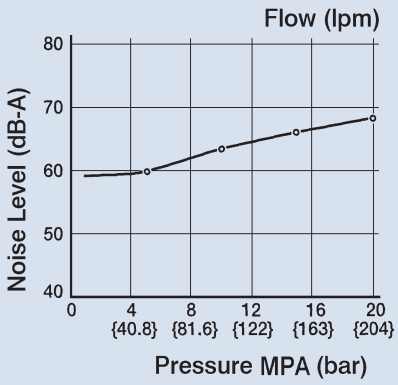

SBG-03

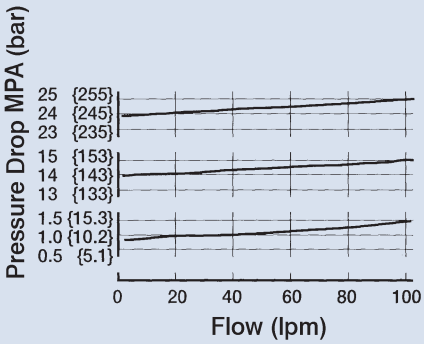

SBG-06

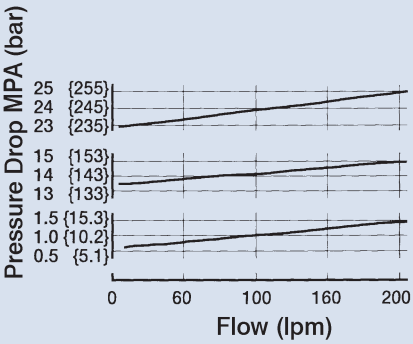

SBG-10

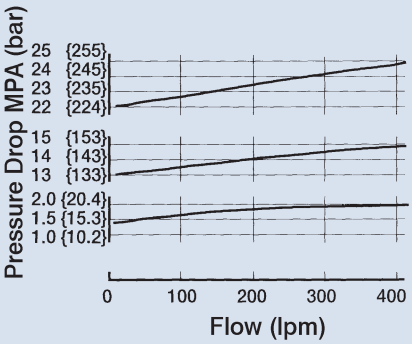

SBG-03

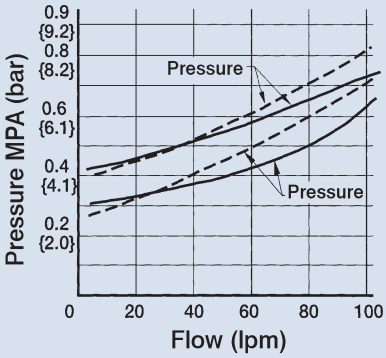

SBG-06

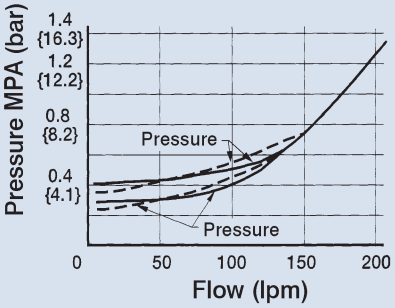

SBG-10

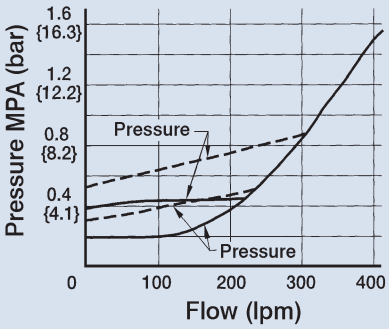

A

SOLENOID CONTROLLED PILOT OPERATED RELIEF VALVE

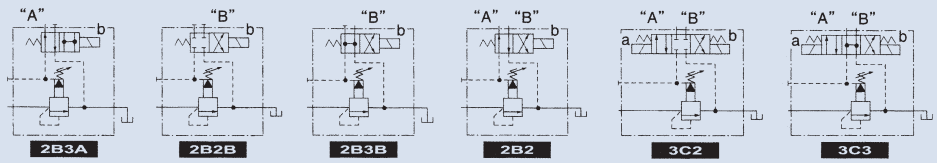

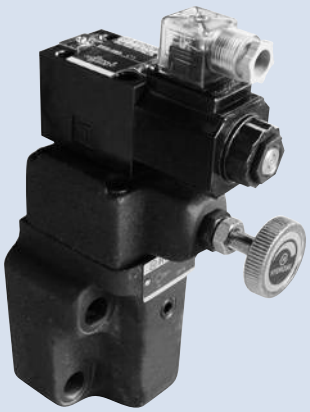

A

How to order

BS G - 06 - H - 2B2 - A22

1 2 3 4 5 6

1	Model
2	Mounting type G: Sub-plate mounting
3	Valve size 03: 3/8" 06: 3/4" 10: 1-1/4"
4	Pressure adjusting range B: 5~70 bar C: 10~140 bar H: 35~230 bar 2H: 140~320 bar
5	Vent type
6	Voltage A11: AC110V (50/60HZ) A22: AC220V (50/60HZ) A24: AC240V (50HZ) A38: AC380V (50HZ) D1: DC12V D2: DC24V

Specifications

Model	Max. Operating Pressure (bar)	Pressure Adj. Range (bar)	Max. Flow (lpm)	Weight (kg)	Bolt Size
BSG-03	300	B: 5~70 C: 10~140 H: 35~230 2H: 140~320	100	5.6	M12 x 70L x 2pcs M12 x 90L x 2pcs
BSG-06			200	7	M16 x 55L x 2pcs M16 x 75L x 2pcs
BSG-10			400	10.8	M20 x 70L x 2pcs M20 x 90L x 2pcs

Dimensions

Unit: mm

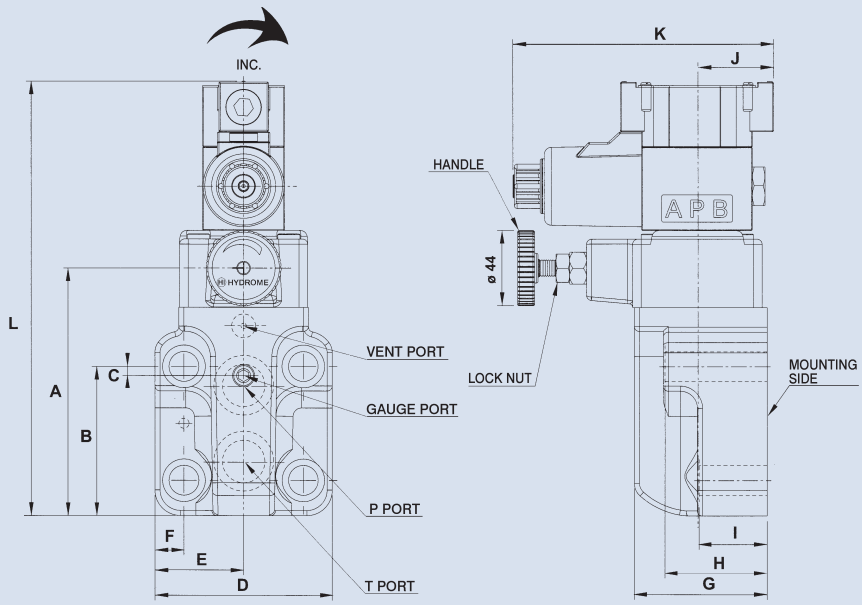

Model	A	B	C	D	E	F
BSG-03	117	75.5	21.5	83	41.5	14.5
BSG-06	145	87.5	5.5	104	52	17
BSG-10	175	106	8	125	62.5	21.2

Model	G	H	I	J	K	L
BSG-03	78	77.5	58.5	45	153	226
BSG-06	78	60	40	45	153	255
BSG-10	90	69.5	49.5	50	153	285

SOLENOID CONTROLLED PILOT OPERATED RELIEF VALVE

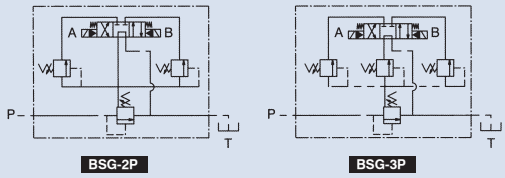

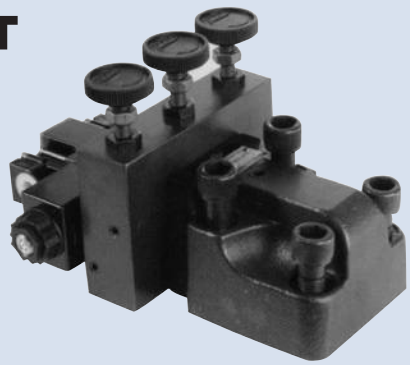

A

How to order

BS G - 06 - H - 2P - 3C60 - A22

1 2 3 4 5 6 7

1	Model
2	Mounting type G: Sub-plate mounting
3	Valve size 03: 3/8" 06: 3/4" 10: 1-1/4"
4	Pressure adjusting range B: 5~70 bar C: 10~140 bar H: 35~230 bar 2H: 140~320 bar
5	2P: Dual pressure adjusting ranges 3P: Three pressure adjusting ranges
6	Vent type 3C3 3C60
7	Voltage A11: AC110V (50/60HZ) A22: AC220V (50/60HZ) A24: AC240V (50HZ) A38: AC380V (50HZ) D1: DC12V D2: DC24V

Specifications

Model	Max. Operating Pressure (bar)	Pressure Adj. Range (bar)	Max. Flow (lpm)	Weight (kg)	Bolt Size
BSG-03	300	B: 5~70 C: 10~140 H: 35~230 2H: 140~320	100	7.5	M12 x 70L x 2pcs M12 x 90L x 2pcs
BSG-06			200	8.7	M16 x 55L x 2pcs M16 x 75L x 2pcs
BSG-10			400	12.5	M20 x 70L x 2pcs M20 x 90L x 2pcs

Dimensions

Unit: mm

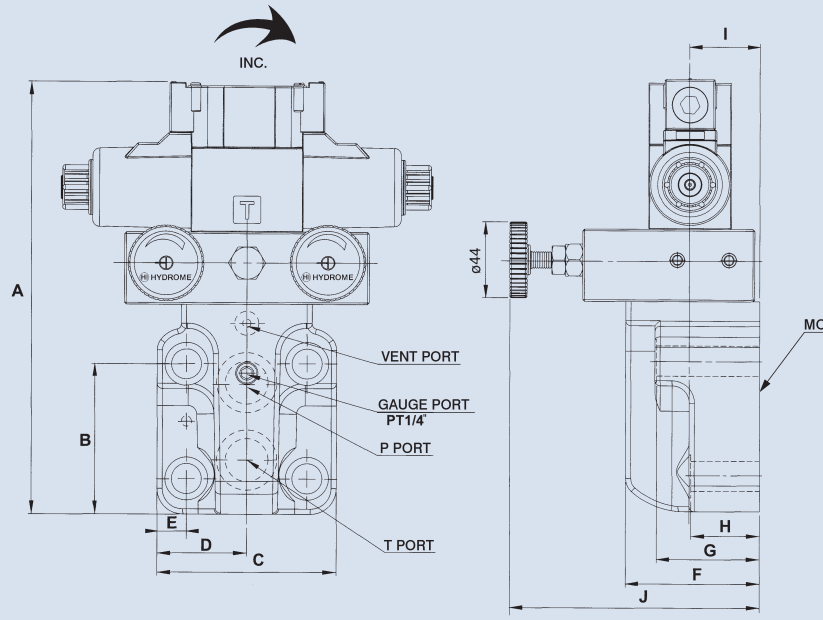

Model	A	B	C	D	E
BSG-03-2P	224	75.5	83	41.5	14.5
BSG-06-2P	251.5	87.5	104	52	17
BSG-10-2P	289.5	106	125	62.5	21.2

Model	F	G	H	I	J
BSG-03-2P	70	77.5	40	41	146
BSG-06-2P	78	60	40	41	146
BSG-10-2P	83	69.5	49.5	46	280

SOLENOID CONTROLLED PILOT OPERATED RELIEF VALVE

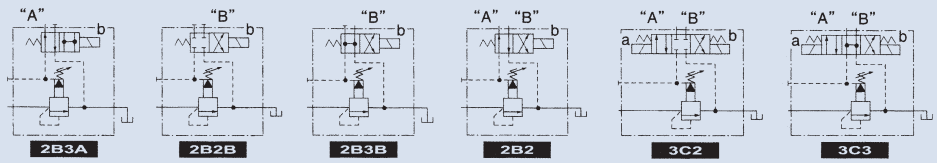

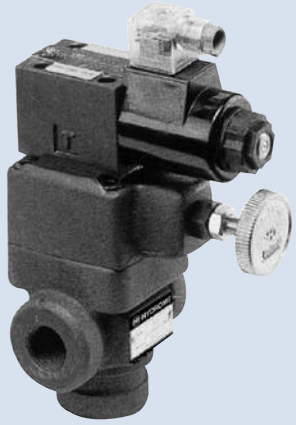

A

How to order

BS T - 06 - H - 2B2 - A22

1 2 3 4 5 6

1	Model
2	Mounting type T: Thread connection
3	Valve size 03: 3/8" 04: 1/2" 06: 3/4" 10: 1-1/4"
4	Pressure adjusting range B: 5~70 bar C: 10~140 bar H: 35~230 bar 2H: 140~320 bar
5	Vent type
6	Voltage A11: AC110V (50/60HZ) A22: AC220V (50/60HZ) A24: AC240V (50HZ) A38: AC380V (50HZ) D1: DC12V D2: DC24V

Specifications

Model	Max. Operating Pressure (bar)	Pressure Adj. Range (bar)	Max. Flow (lpm)	Weight (kg)
BST-03	300	B: 5~70	60	4.6
BST-04		C: 10~140	100	4.6
BST-06		H: 35~230	200	4.6
BST-10		2H: 140~320	400	9.4

Dimensions

Unit: mm

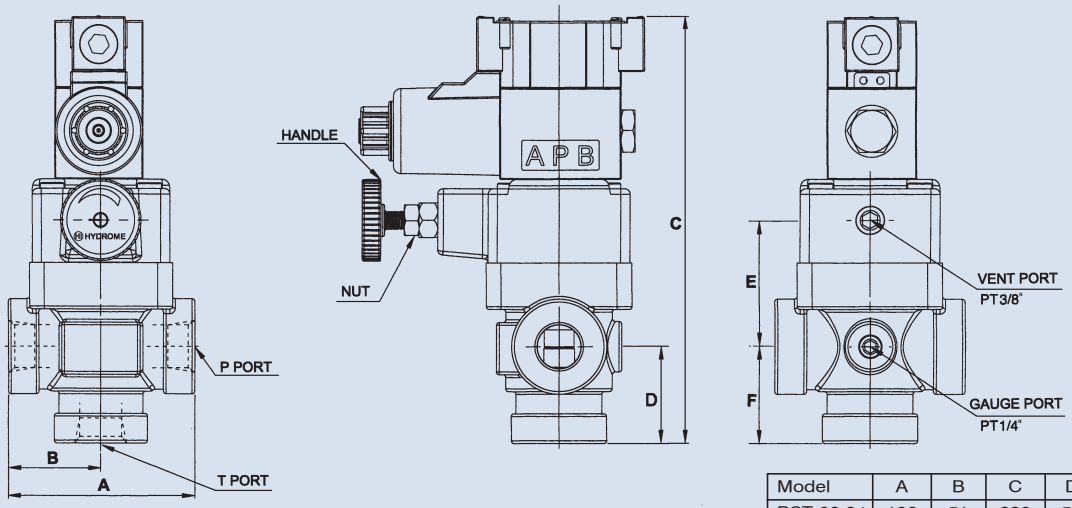

Model	A	B	C	D	E	F
BST-03,04	102	51	230	52	68	52
BST-06	120	51	230	52	68	52
BST-10	140	70	284	84	86	82

SOLENOID CONTROLLED PILOT OPERATED RELIEF VALVE

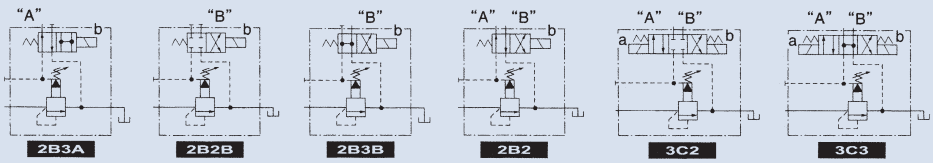

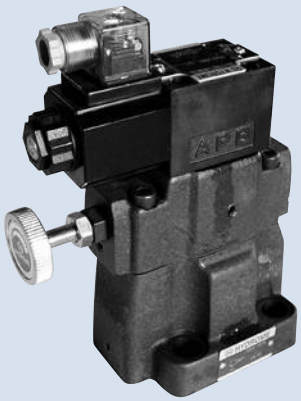

A

How to order

SBS G - 06 - H - 2B2 - A22

1 2 3 4 5 6

1	Model
2	Mounting type G: Sub-plate mounting
3	Valve size 03: 3/8" 06: 3/4" 10: 1-1/4"
4	Pressure adjusting range B: 5~70 bar C: 10~140 bar H: 35~230 bar 2H: 140~320 bar
5	Vent type
6	Voltage A11: AC110V (50/60HZ) A22: AC220V (50/60HZ) A24: AC240V (50HZ) A38: AC380V (50HZ) D1: DC12V D2: DC24V

Specifications

Model	Max. Operating Pressure (bar)	Pressure Adj. Range (bar)	Max. Flow (lpm)	Weight (kg)	Bolt Size
SBSG-03	300	B: 5~70 C: 10~140 H: 35~230 2H: 140~320	100	5	M12 x 40L
SBSG-06			200	6.2	M16 x 45L
SBSG-10			400	9.5	M20 x 60L

Dimensions

Unit: mm

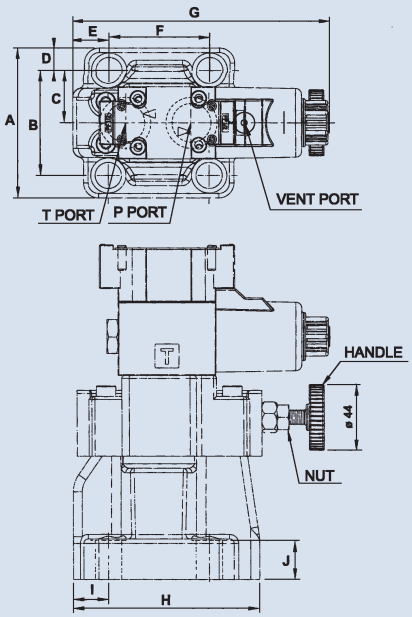

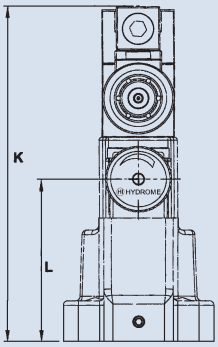

Model	A	B	C	D	E	F
SBSG-03	78	54	27	12	34.5	54
SBSG-06	100	70	35	15	23.5	67
SBSG-10	127	82.6	41.3	22.2	20.5	89

Model	G	H	I	J	K	L
SBSG-03	169	107	26.5	23	222	106
SBSG-06	171	124	23.5	26	224	108
SBSG-10	190	155	20.5	36	273	120

SOLENOID CONTROLLED PILOT OPERATED RELIEF VALVE

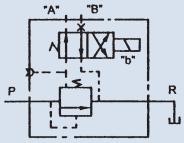

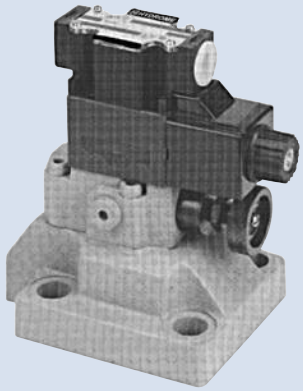

A

How to order

DBW - 10 - H - A22
1 2 3 4

1	Model	Sub-plate mounting
2	Valve size	10: 3/8" 20: 3/4" 30: 1-1/4"
3	Pressure adjusting range	B: 5~70 bar C: 7~140 bar H: 35~230 bar 2H: 140~330 bar
4	Voltage	A11: AC110V (50/60HZ) A22: AC220V (50/60HZ) A24: AC240V (50HZ) A38: AC380V (50HZ) D1: DC12V D2: DC24V

Specifications

Model	Max. Operating Pressure (bar)	Pressure Adj. Range (bar)	Max. Flow (lpm)	Weight (kg)	Bolt Size
DBW-10	350	B: 5~70 C: 7~140 H: 35~230 2H: 140~330	150	3.5	M12 x 40L
DBW-20			250	4.5	M16 x 45L
DBW-30			500	6	M20 x 60L

Dimensions

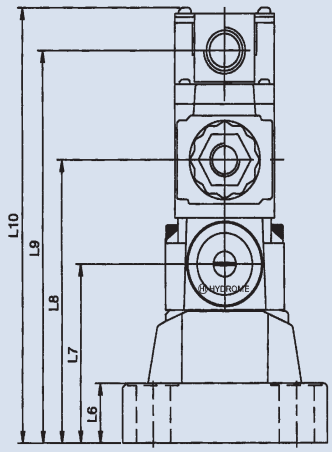

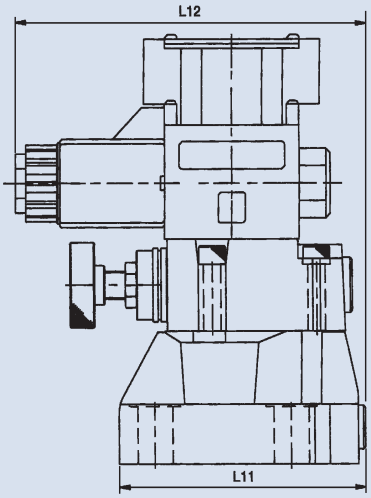

Unit: mm

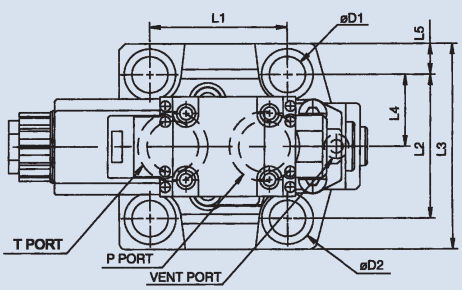

Model	L1	L2	L3	L4	L5	L6	L7
DBW-10	53.8	53.8	78	26.9	12	26	78
DBW-20	66.7	70	100	35	15	26	78
DBW-30	88.9	82.6	114	41.3	15.7	26	78

Model	L8	L9	L10	L11	L12	D1	D2
DBW-10	123	171	190	96	164	13	20
DBW-20	123	171	190	120.5	171	17.5	25
DBW-30	123	171	190	151	183	21.5	30

BACK PRESSURE CONTROL VALVE

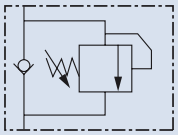

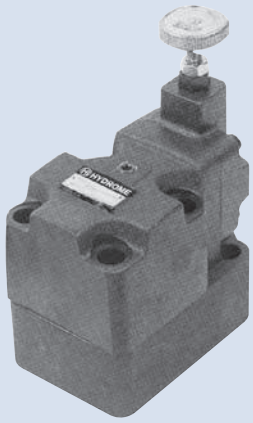

A

How to order

BR - 06 - B
1 2 3

1	Model
2	Valve size 03: 3/8" 06: 3/4" 10: 1-1/4"
3	Pressure adjusting range B: 5~70 bar C: 10~140 bar

Specifications

Model	Max. Operating Pressure (bar)	Pressure Adj. Range (bar)	Max. Flow (lpm)	Weight (kg)	Bolt Size
BR-03	250	B: 5~70 C: 10~140	100	7.5	M12 x 110L x 2pcs M12 x 130L x 2pcs
BR-06			200	11	M16 x 120L x 2pcs M16 x 140L x 2pcs
BR-10			400	19	M20 x 140L x 2pcs M20 x 160L x 2pcs

Dimensions

Unit: mm

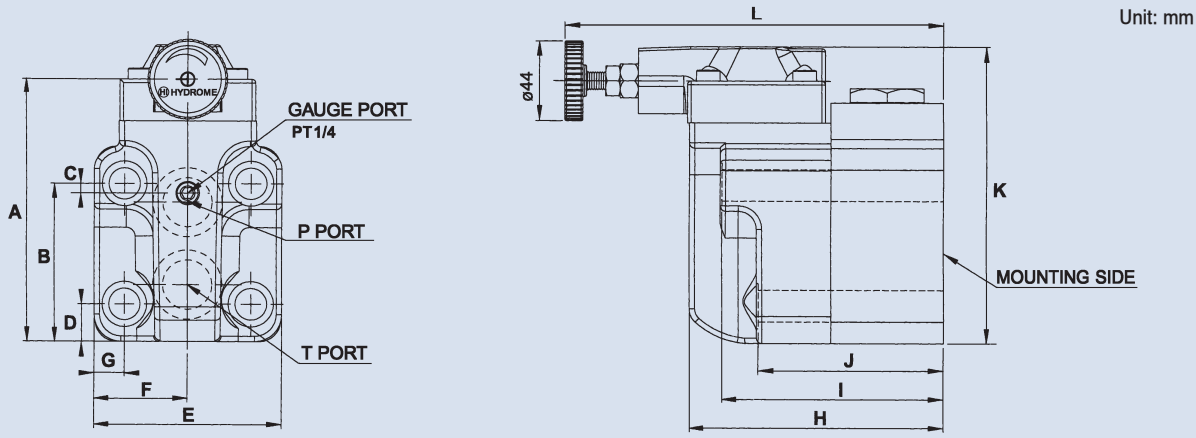

Model	A	B	C	D	E	F	G	H	I	J	K	L
BR-03	120.5	79.5	22	25.7	83	41.5	14.6	117	116.5	97.5	139.5	190.3
BR-06	148	86	1	19.3	104	52	17	118	97	87	167	186.4
BR-10	181	112.7	8	23.8	125	62.5	21.2	163	142.5	122.5	201.7	230

UNLOADING RELIEF VALVE

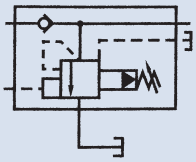

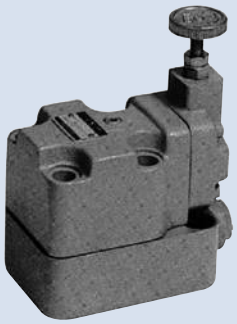

A

How to order

BUC G - 06 - H

1 2 3 4

1	Model
2	Mounting type G: Sub-plate mounting
3	Valve size 03: 3/8" 06: 3/4" 10: 1-1/4"
4	Pressure adjusting range B: 5~70 bar C: 10~140 bar H: 35~230 bar

Specifications

Model	Max. Operating Pressure (bar)	Pressure Adj. Range (bar)	Max. Flow (lpm)	Weight (kg)
BUCG-03	250	B: 5~70	90	8.5
BUCG-06		C: 10~140	200	12.5
BUCG-10		H: 35~230	400	19.5

Dimensions

Unit: mm

BUCG-03

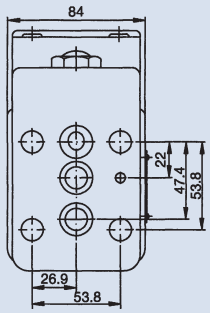

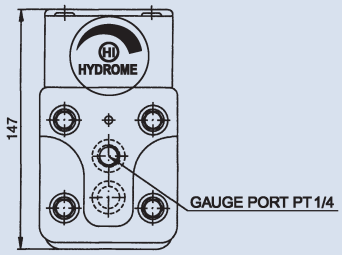

BUCG-06

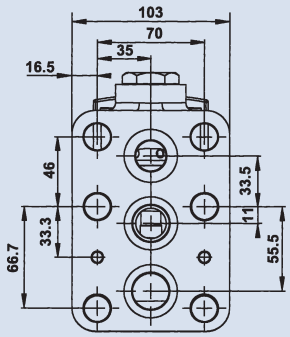

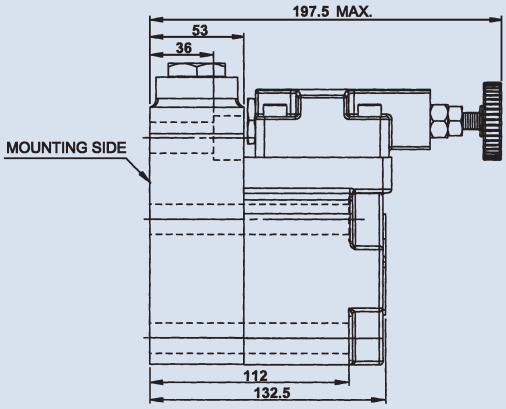

PRESSURE REDUCING VALVE

FEATURES:

- Pressure reducing valve is used in a branch of circuitry where a constant reduced pressure than the main relief setting is required. It can also be remote controlled by connecting form its remote control port(RC).
- Pressure reducing valve when combined with a built-in check valve, the free reverse flow can be accomplished. Pressure reducing valve without built-in check valve can be used in P line of a circuit. With a built-in check valve, it can be used in either A or B line of an actuator.

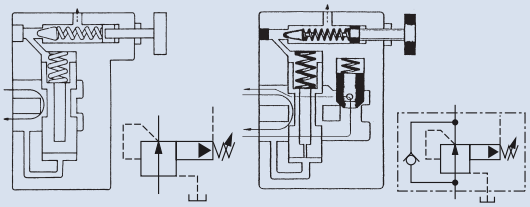

A

How to order

RC G - 03 - B

1 2 3 4

1	Model R: Pressure reducing valve RC: Pressure reducing with check valve
2	Mounting type G: Sub-plate mounting T: Thread connection
3	Valve size 03: 3/8" 06: 3/4" 10: 1-1/4"
4	Pressure adjusting range B: 5~70 bar C: 10~140 bar H: 35~230 bar

Specifications

Model		Max. Operating Pressure (bar)	Pressure Adj. Range (bar)	Max. Flow (lpm)	Weight (kg)		Bolt Size
Sub-Plate Mounting	Thread Connection				RG, RCG	RT, RCT	RG, RCG
RG-03 / RCG-03	RT-03,04 / RCT-03,04	250	B: 5~70	50	4.6 / 5.5	4.2 / 4.5	M10 x 55L x 4pcs M10 x 70L x 4pcs
RG-06 / RCG-06	RT-06 / RCT-06		C: 10~140	125	7.2 / 8.2	7.4 / 7.8	M10 x 55L x 4pcs M10 x 80L x 4pcs
RG-10 / RCG-10	RT-10 / RCT-10		H: 35~230	250	12 / 14.8	12 / 16.4	M10 x 55L x 6pcs M10 x 95L x 6pcs

Performance curves

Unit: mm

RG-03, RCG-03, RT-03, RCT-03

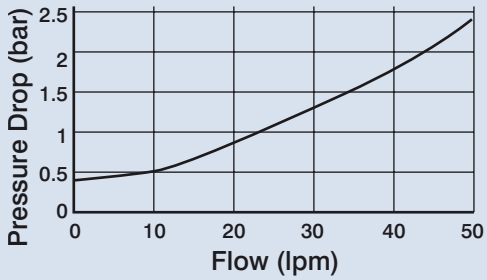

RG-10, RCG-10, RT-10, RCT-10

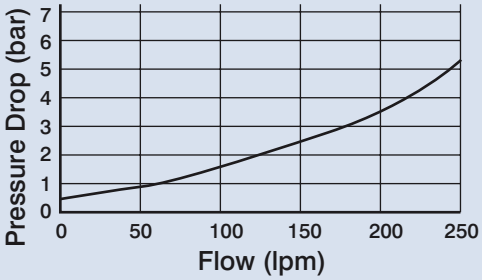

RG-06, RCG-06, RT-06, RCT-06

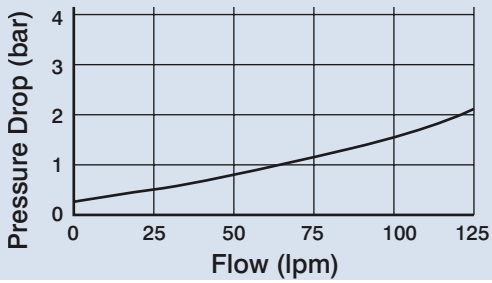

PRESSURE REDUCING VALVE

A

Dimensions

RT-03, 06, 10

Unit: mm

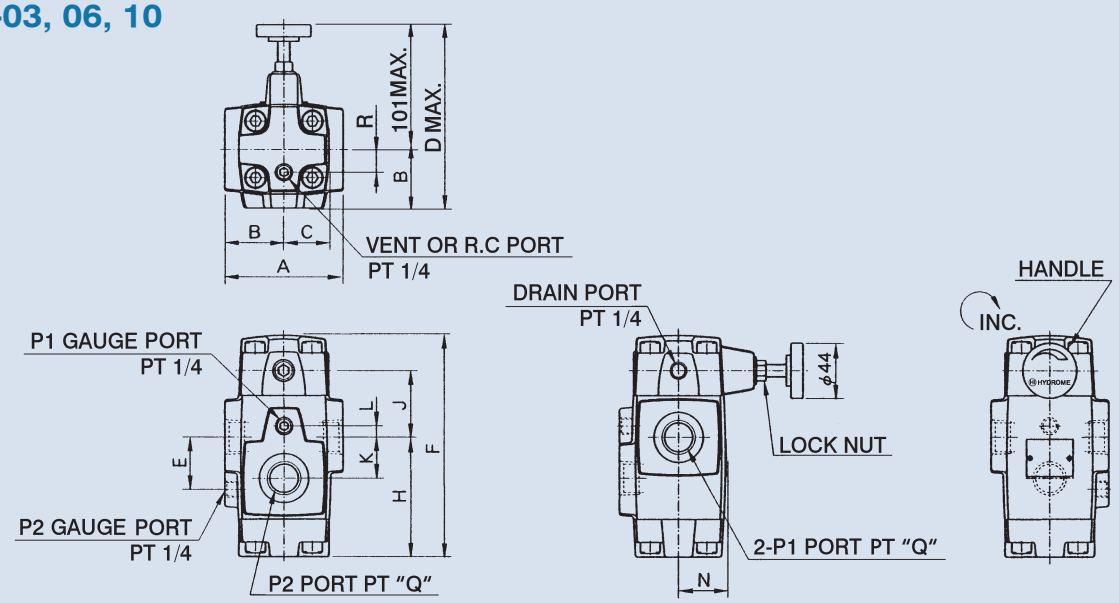

Model	A	B	C	D	E	F	H	J	K	L	N	Q	R
RT-03	82	41	33	148	28	155	85	48	28		32	3/8	10
RT-06	96	48	36.5	149	42	179	97.5	53.5	33	9	39	3/4	18.5
RT-10	132	66	43	167	52	216	124	64	40	12	46	1-1/4	18.5

RCT-03, 06, 10

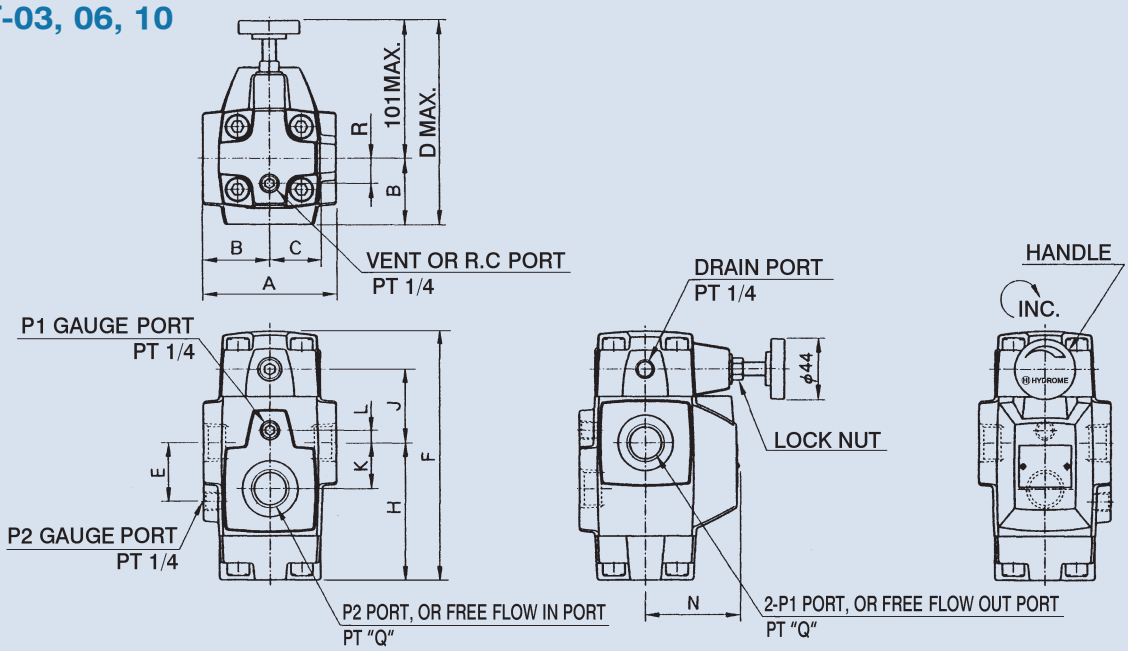

Model	A	B	C	D	E	F	H	J	K	L	N	Q	R
RCT-03	82	41	30	148	28	155	85	48	28		55	3/8	10
RCT-06	96	48	36.5	149	42	179	97.5	53.5	33	9	68	3/4	18.5
RCT-10	132	66	43	167	52	216	124	64	40	12	86	1-1/4	18.5

PRESSURE REDUCING VALVE

Dimensions

RG-03, 06

Unit: mm

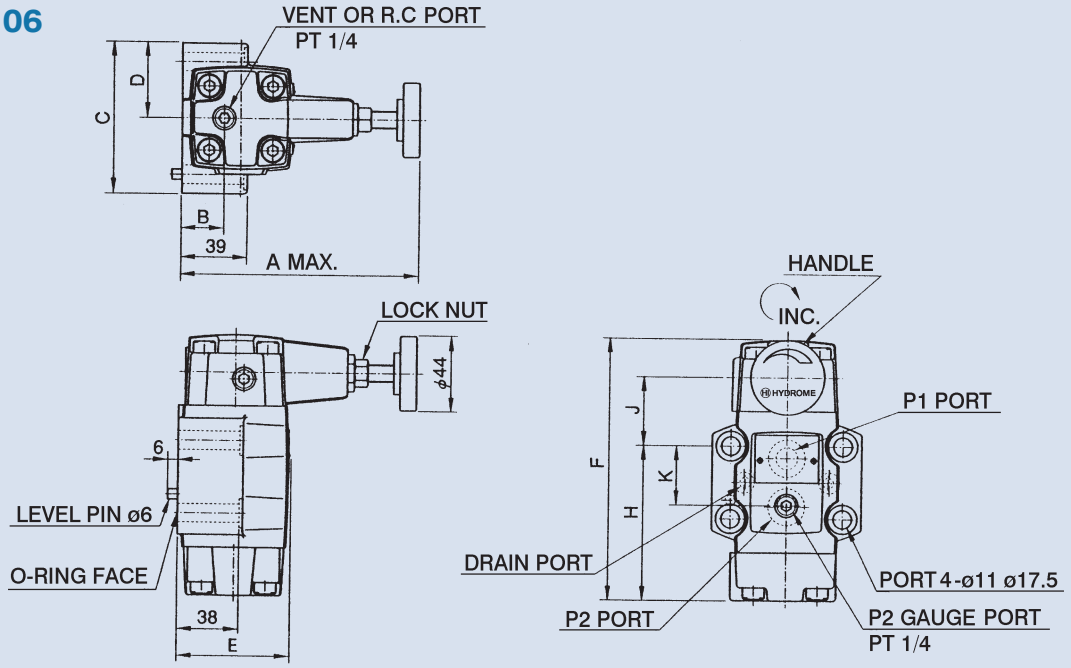

Model	A	B	C	D	E	F	H	J	K
RG-03	142	25	89	44.5	67	155.5	92.4	40.6	34.9
RG-06	141	21.5	102	51	79	179	111	40	48

RG-10

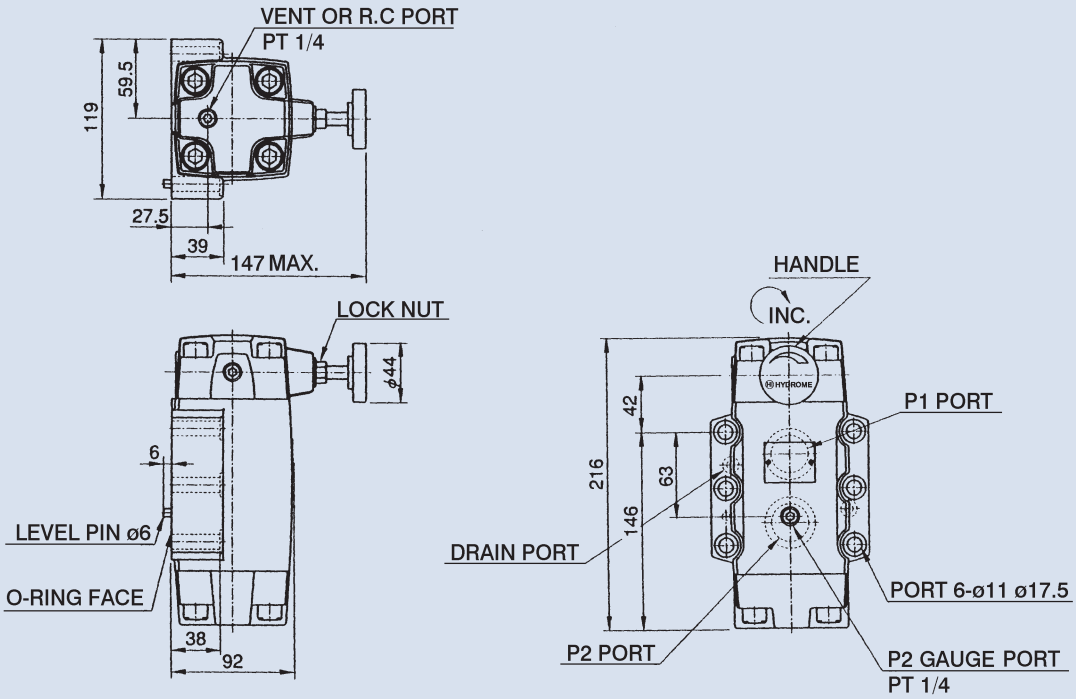

A

PRESSURE REDUCING VALVE

A

Dimensions

RCG-03, 06

Unit: mm

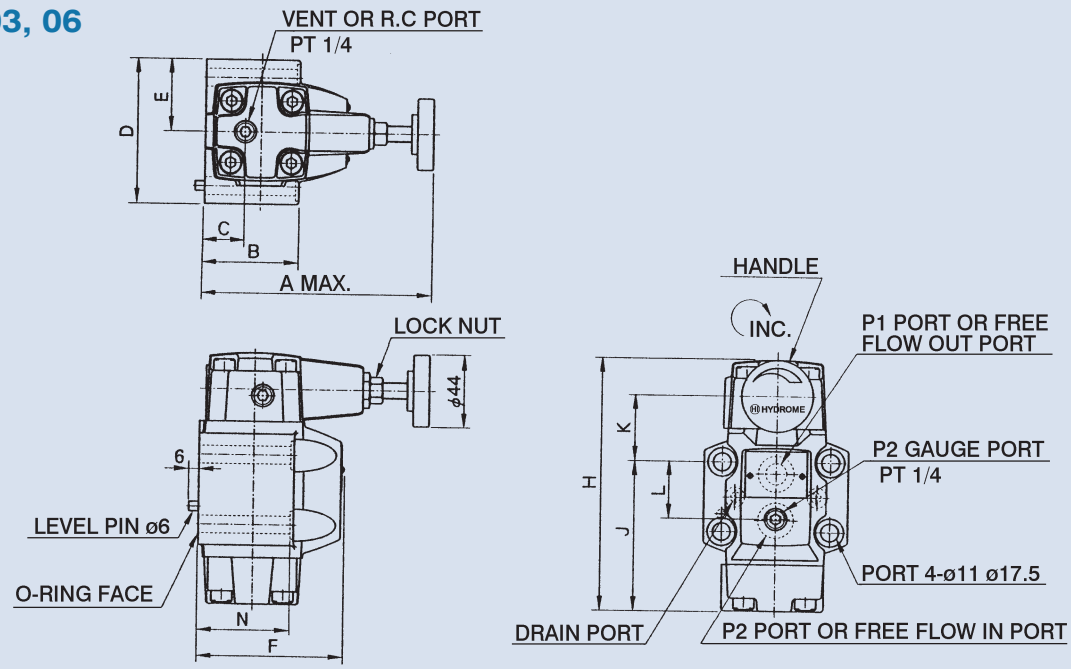

Model	A	B	C	D	E	F	H	J	K	L	N
RCG-03	142	59	25	89	44.5	90	155	92.4	40.6	34.9	58
RCG-06	141	69	21.5	102	51	108	179	111	40	48	68

RCG-10

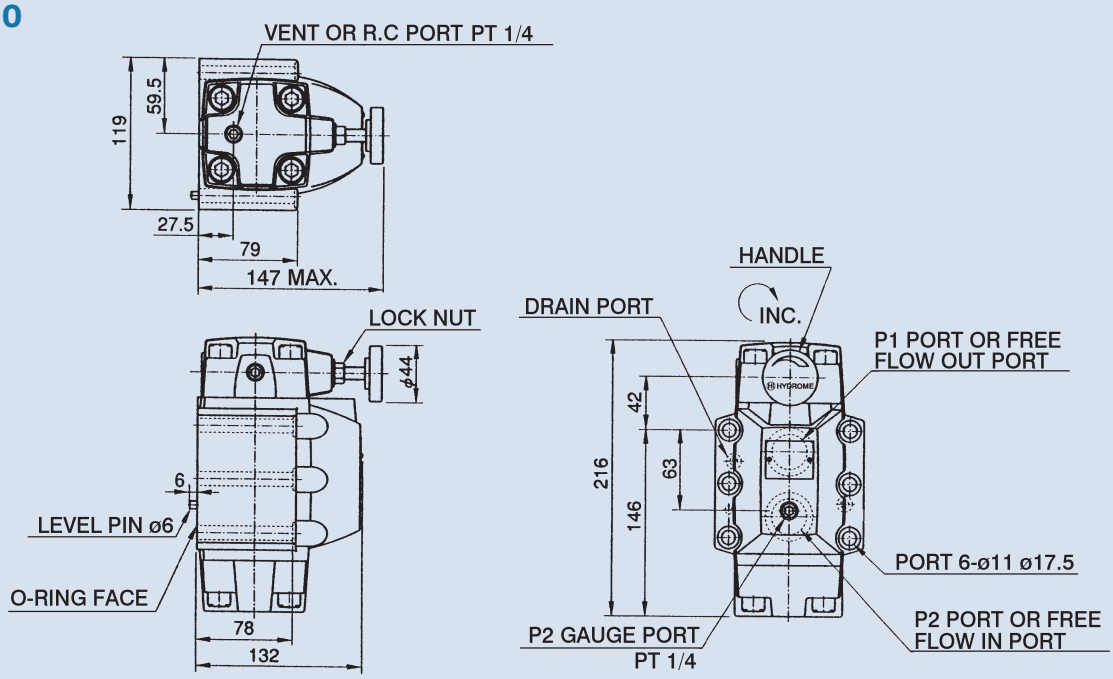

SEQUENCE VALVE AND COUNTERBALANCE VALVE

FEATURES:

- HG series is the direct acting type pressure control valve which uses either internal or external pilot pressure to make the valve operate. By the different way of assembly, the valve can be functioned as low pressure relief valve, sequence valve, or unloading valve.
- HCG series valve is HG valve with a check valve built-in, so that free revers flow can be accomplished. The valve can then be served as sequence valve or counterbalance valve. HCG valve can use either internal pilot, or external pilot. When it is used as sequence valve, it should be externally drained; and if used as counterbalance valve, it should be internally drained.
- Remarks: NPT ports for HCT series can be made by special order.

A

How to order

H C G - 03 - B - 4

1 2 3 4 5 6

1	Model
2	C: With check
3	Mounting type G: Sub-plate mounting T: Thread connection
4	Valve size
5	Pressure adjusting range
6	Valve type

Specifications

Model		Pressure Adj. Range (bar)	Max. Flow (lpm)	Weight (kg)	
Sub-Plate Mounting	Thread Connection			HG, HCG	HT, HCT
HG-03 / HCG-03	HT-03 / HCT-03	A: 18~35 B: 35~70 C: 70~140 H: 140~210	60	4 / 5	3.7 / 4.1
HG-06 / HCG-06	HT-06 / HCT-06		130	6.1 / 7.4	6.2 / 7.1
HG-10 / HCG-10	HT-10 / HCT-10		250	11.0 / 13.8	12.0 / 13.8

Without check	The type of pilot, drain	Function drawing	Symbol
1.Low pressure relief	Internal pilot internal drain	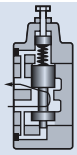	
2.Sequence valve	Internal pilot external drain	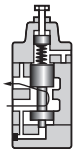	
3.Sequence valve	External pilot external drain	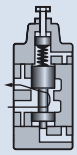	
4.Unloading relief	External pilot internal drain	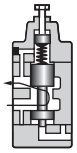	

With check	The type of pilot, drain	Function drawing	Symbol
1.Counter balance valve	Internal pilot internal drain	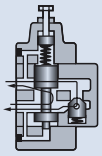	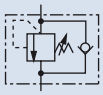
2.Sequence & check valve	Internal pilot external drain	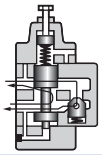	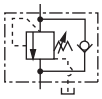
3.Sequence & check valve	External pilot external drain	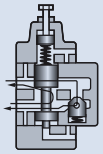	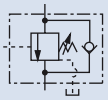
4.Counter balance valve	External pilot internal drain	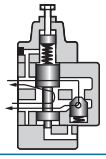	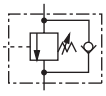

SEQUENCE VALVE AND COUNTERBALANCE VALVE

A

Dimensions

Unit: mm

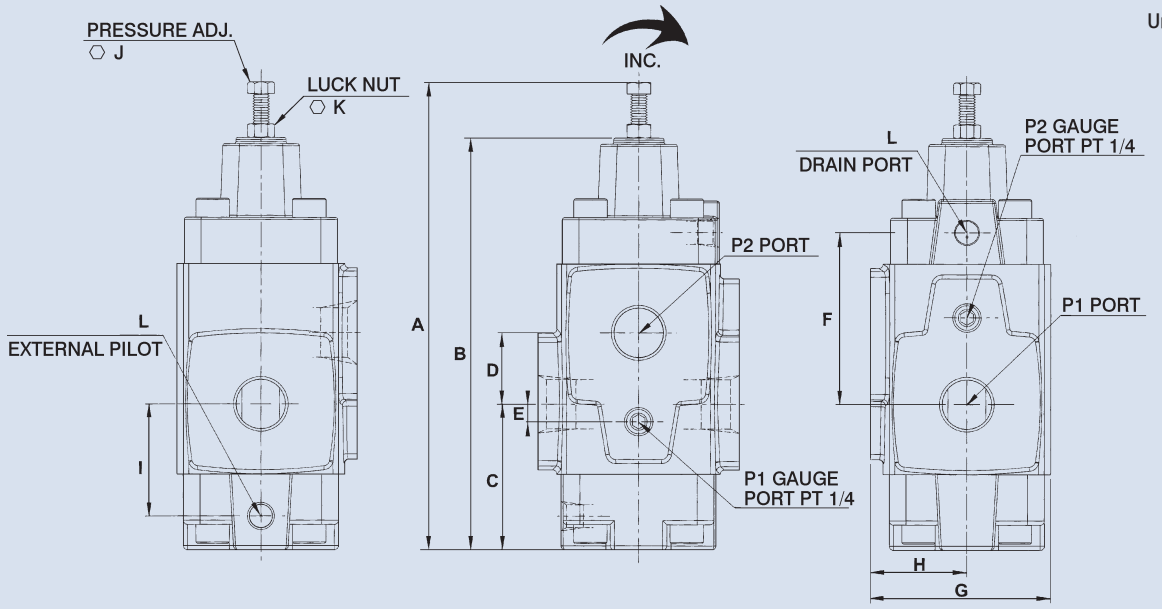

Model	A	B	C	D	E	F	G	H	I	J	K	L
HT-03	192	167.5	58	30	0	69	74	41.5	45	10	13	1/8
HT-06	223	196	69	34	8	82	86	46	53	10	13	1/4
HT-10	266	239	87	41	11	98	110	65	68	10	17	1/4

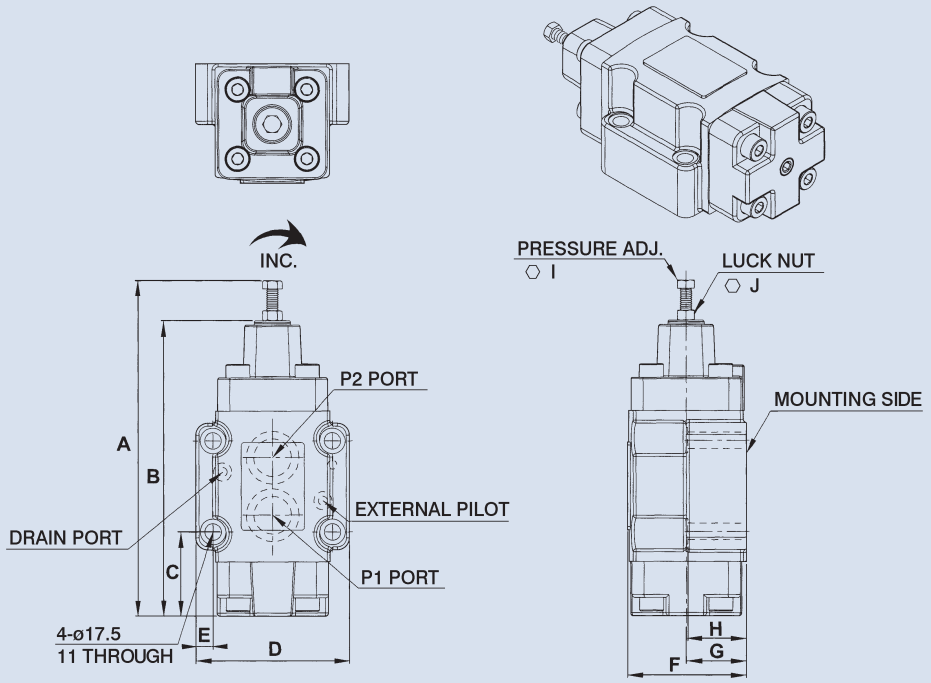

Model	A	B	C	D	E	F	G	H	I	J	Bolt size
HG-03	192	168	50.6	89	11.2	69	42	35	10	13	M10 x 50L x 4pcs
HG-06	223	196	60	102	11.3	79	46	39	10	13	M10 x 55L x 4pcs
HG-10	266	239	65	119	11	96	48.5	40	10	17	M10 x 60L x 6pcs

SEQUENCE VALVE AND COUNTERBALANCE VALVE

Dimensions

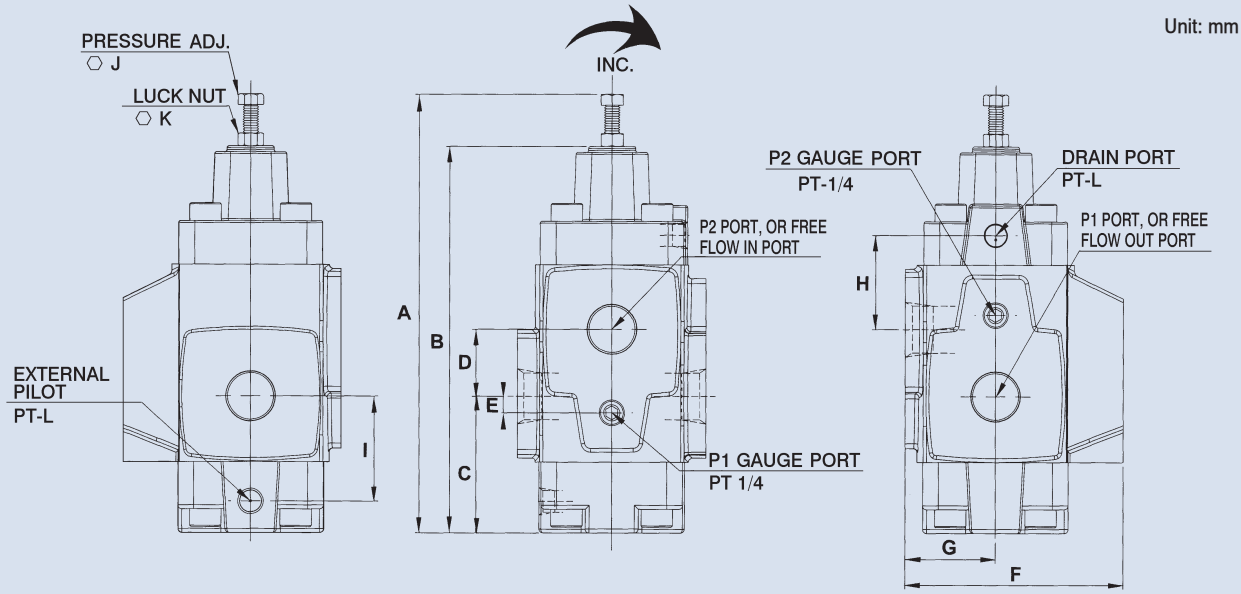

Model	A	B	C	D	E	F	G	H	I	J	K	L
HCT-03	195	170.5	59.5	28	0	95	41.5	39	45	10	13	1/8
HCT-06	213.5	189.5	66	34	8.3	111	46	46.5	53.5	10	13	1/4
HCT-10	267.5	237	87	40	15	154	64	59	68	10	17	1/4

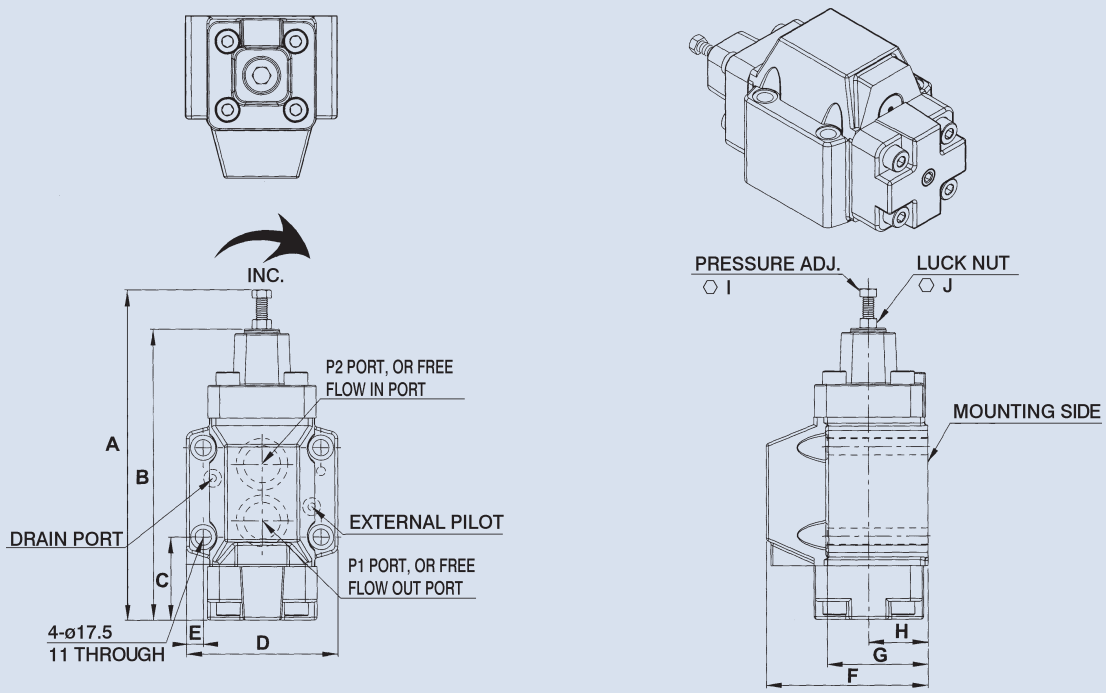

Model	A	B	C	D	E	F	G	H	I	J	Bolt size
HCG-03	192	167.5	50.6	89	11.2	90	58	35	10	13	M10 x 70L x 4pcs
HCG-06	222	196	60	102	11.3	109	68	40	10	13	M10 x 80L x 4pcs
HCG-10	266	239	65	119	11.5	131	80	48	10	17	M10 x 95L x 6pcs

SUBPLATE FOR VALVES BG, DB, SBG, BR, RCG, HCG, CPDG

A

Dimensions

Unit: mm

BGM, DBM, SBGM, BRM

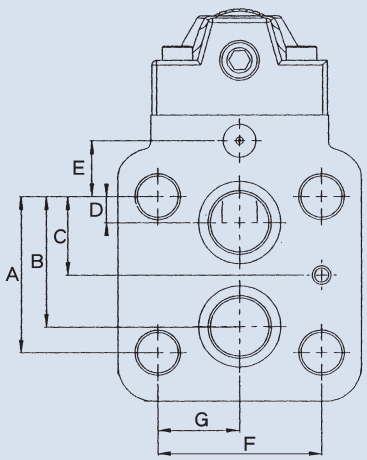

Port size	A	B	C	D	E	F	G
03	53.8	47.4	22	22	0	53.8	26.9
06	66.7	55.5	33.4	11	23.8	70	35
10	88.9	76.2	44.5	12.7	31.8	82.6	41.3

RGM-03, RCGM-03, HGM-03, HCGM-03, CPDGM-03

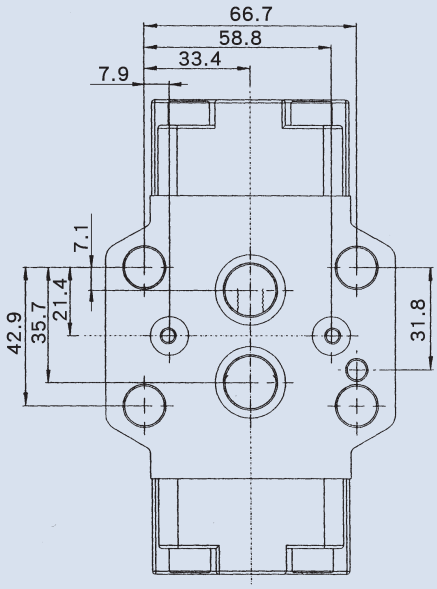

RGM-06, RCGM-06, HGM-06, HCGM-06, CPDGM-06

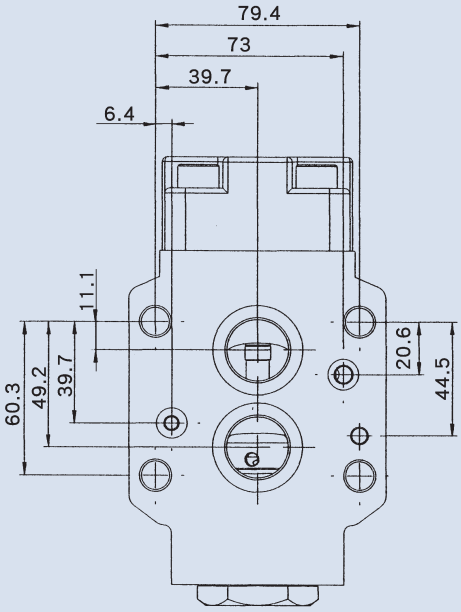

RGM-10, RCGM-10, HGM-10, HCGM-10, CPDGM-10

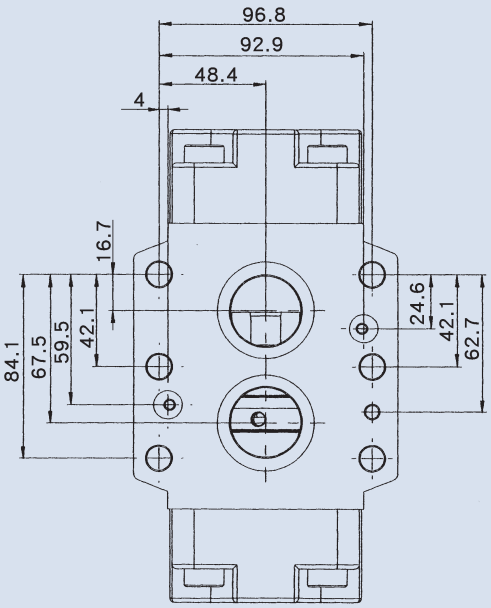

4ManPro

Elements For Manufacturing Processes

HI HYDROME

VALVULAS HIDRAULICAS DE CONTROL DIRECCIONAL (DIRECTIONAL CONTROL VALVE)

CHECK VALVE

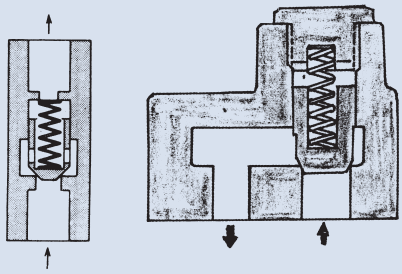

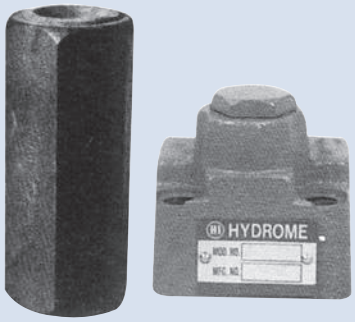

How to order

CRG - 06 - 5
1 2 3

1	Model	CRG: Sub-plate mounting CIT: Thread connection
2	Valve size	03: 3/8" 04: 1/2" 06: 3/4" 08: 1" 10: 1-1/4" 12: 1-1/2" 16: 2"
3	Cracking pressure (bar)	5: 0.5 50: 5

Specifications

Model		Rated Flow (lpm)	Max. Operating Pressure(bar)	Cracking Pressure (bar)	Weight (kg)	
Sub-Plate Mounting	Thread Connection					
CRG-03	CIT-03	40	230	05: 0.5 50: 5	2	0.18
-	CIT-04	60			-	0.32
CRG-06	CIT-06	125			4	0.49
-	CIT-08	180			-	1.1
CRG-10	CIT-10	300			8	1.8
-	CIT-12	420			-	2.7
-	CIT-16	600			-	3.62

Dimensions

CIT-03,04,06,08,10,12,16

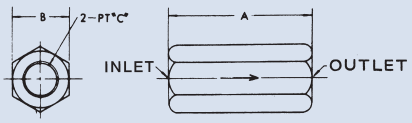

Model	A	B	C
CIT-03	70	23	3/8
CIT-04	74	29	1/2
CIT-06	95	35	3/4
CIT-08	112	46	1
CIT-10	132	55	1-1/4
CIT-12	140	65	1-1/2
CIT-16	156	80	2

CRG-03,04,06

Unit: mm

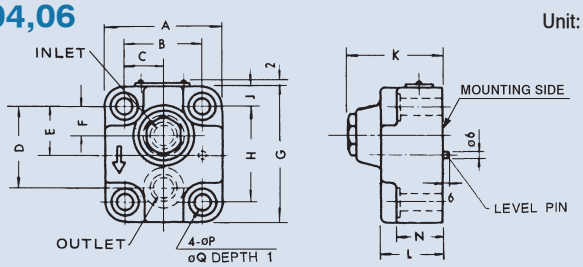

Model	A	B	C	D	E	F	G	H	J	K	L	N	P	Q	Bolt size
CRG-03	68	47.6	23.8	47.6	30.1	12.7	80	60.3	10	72	55	46	11	17.5	M10 x 60L x 4pcs
CRG-06	98	65.1	32.6	68.2	40.5	22.2	114	80.9	16.5	81	53	38	17.5	26	M16 x 60L x 4pcs
CRG-10	130	92.1	46.1	71.4	46	20.6	130	92.1	19	96	65	47	21.5	32	M20 x 75L x 4pcs

CRGM-03

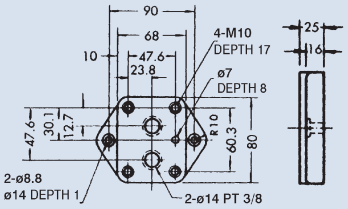

CRGM-06

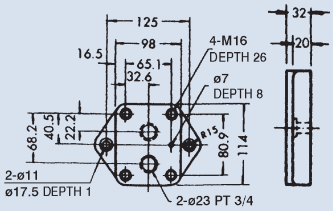

CRGM-10

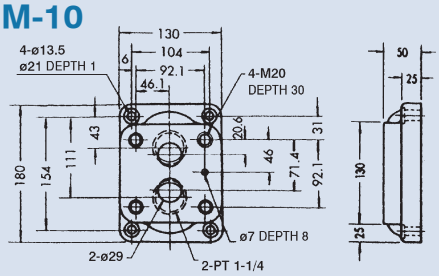

CHECK VALVE

C

How to order

CRG - 06 - 5 - 50
1 2 3 4

1	Model Sub-plate mounting
2	Valve size 03: 3/8" (ISO 5781-AG-06-2-A) 06: 3/4" (ISO 5781-AH-08-2-A) 10: 1-1/4" (ISO 5781-AJ-10-2-A)
3	Cracking pressure (bar) 5: 0.5 50: 5
4	ISO standard

Specifications

Model	Rated Flow (lpm)	Max. Operating Pressure (bar)	Cracking Pressure (bar)	Weight (kg)
CRG-03	40	250	5: 0.5 50: 5	2.2
CRG-06	125			3.2
CRG-10	300			6.5

Dimensions

CRG-03-※-50, CRG-06-※-50

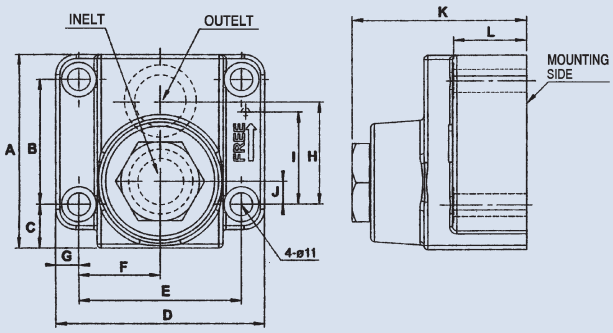

Model	A	B	C	D	E	F
CRG-03-※-50	73	42.9	18	89	66.7	33.4
CRG-06-※-50	94	60.3	21.5	102	79.4	39.7

Model	G	H	I	J	K	L
CRG-03-※-50	11.2	35.7	31.8	7	68	33
CRG-06-※-50	11.3	49.2	44.5	11.1	85	35

CRG-10-※-50

Unit: mm

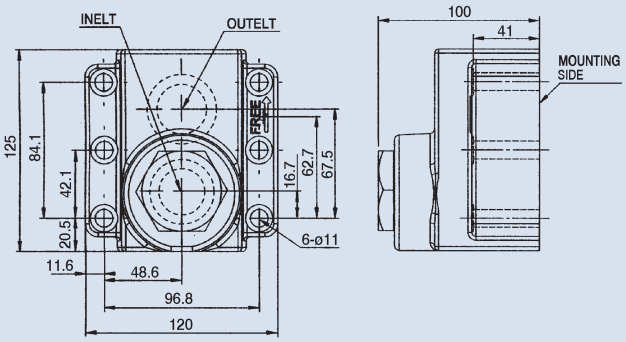

PILOT OPERATED CHECK VALVE

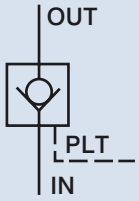

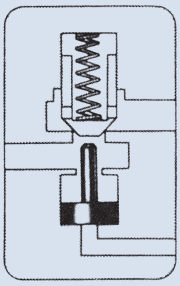

C

How to order

CPD - T - 06 - E - 50
1 2 3 4 5

1	Model
2	Mounting type G: Sub-plate mounting T: Thread connection F: Flange connection
3	Valve size 03: 3/8" 06: 3/4" 10: 1-1/4" 16: 2"
4	E: External drain Omit: Internal drain
5	Cracking pressure

Specifications

Model			Max. Operating Pressure (bar)	Cracking Pressure (bar)	Rated Flow (lpm)	Weight(kg)		
Sub-Plate Mounting	Thread Connection	Flange Connection				G type	T type	F type
CPDG-03	CPDT-03	-	250	5: 0.5 35: 3.5 50: 5	50	5	3	-
CPDG-06	CPDT-06	-			125	6.5	5.8	-
CPDG-10	CPDT-10	CPDF-10			320	12	11.4	11.4
-	-	CPDF-16			500	-	-	30

Dimensions

Unit: mm

CPDG-03, CPDG-06

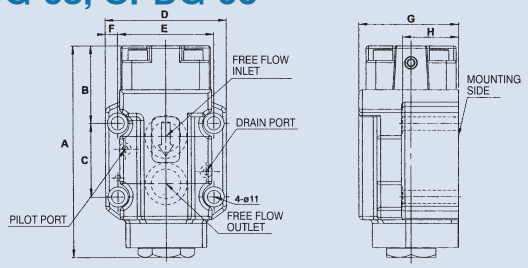

Model	A	B	C	D	E	F	G	H
CPDG-03	148	52.6	42.9	91	66.7	12.2	70	61
CPDG-06	174	63.4	60.3	100	79.4	10.3	82	46

CPDG-10

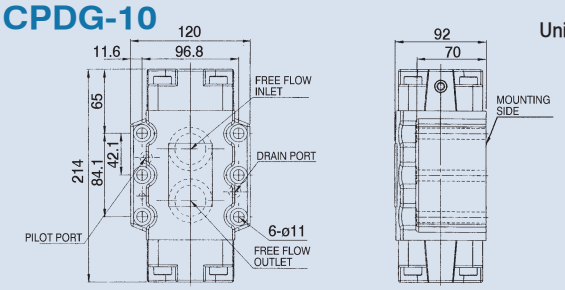

CPDF-16

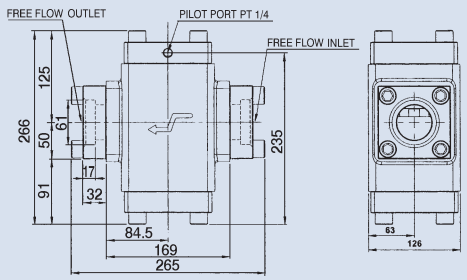

CPDT-03,06,10

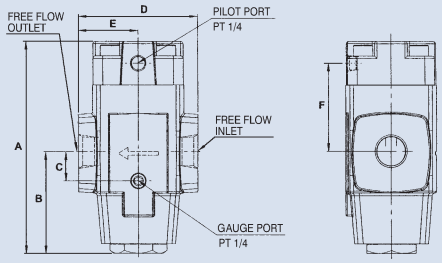

Model	A	B	C	D	E	F	G	H
CPDT-03	148	74	19	80	40	59	62	31
CPDT-06	174	84	24	98	49	72	75	37.5
CPDT-10	200	90.5	22.5	140	70	92.5	92	46

IN-LINE PILOT OPERATED CHECK VALVE

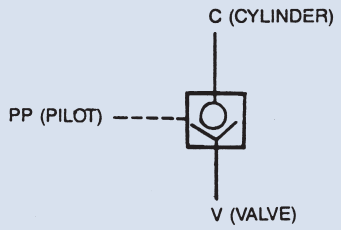

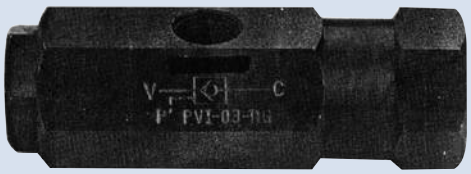

C

How to order

PCVI - 03 - T
1 2 3

1	Model
2	Valve size 03: 3/8" 04: 1/2"
3	Mounting type T: Thread connection

Specifications

Model	Max. Operating Pressure (bar)	Cracking Pressure(bar)	Max. Flow (lpm)	Weight (kg)
PCVI-03T	250	0.5	30	0.76
PCVI-04T			40	1.2

Dimensions

PCVI-03,04T

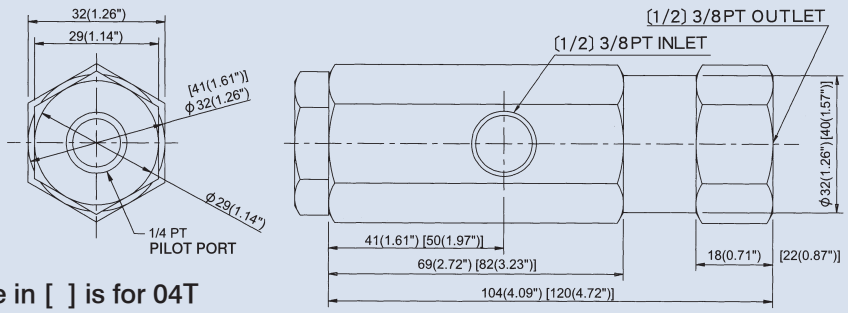

Unit: mm
(inch)

Remark: The size in [ ] is for 04T

Performance curves

CPDG-03, CPDT-03

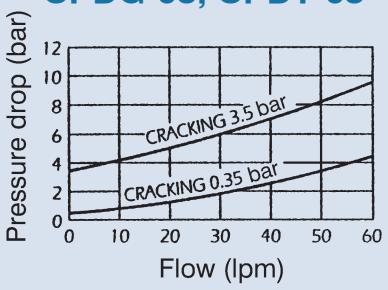

CPDG-06, CPDT-06

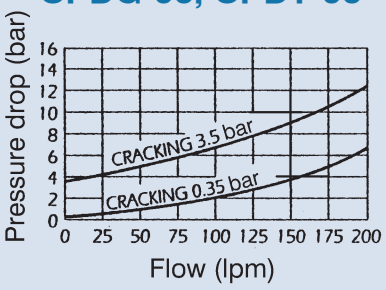

CPDG-10, CPDT-10

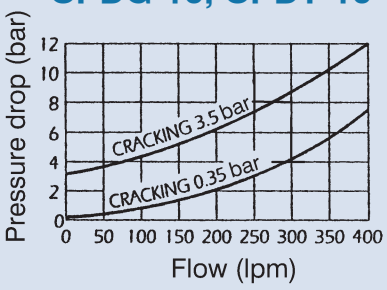

PREFILL VALVE

FEATURES:

- Material is FC30, Max. working pressure 3400psi.
- Both 180 and 90 degrees connection available.
- Min. pilot pressure required is 1/3 working pressure.
- Check operated in two stages to preclude shock.

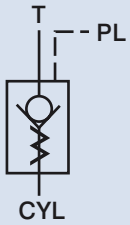

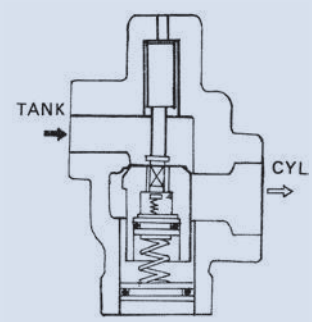

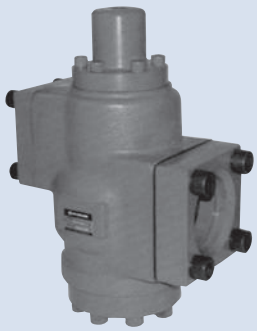

C

How to order

SG - 24 - ※

1 2 3

1	Model
2	Valve size 16: 2" 24: 3" 32: 4" 48: 6"
3	None: 180° L: 90°

Specifications

Model	Maximum Pressure (bar)	Max. Flow(lpm)		Operating Flow(lpm)		Cracking Pressure (bar)	Weight (kg)
		No Pilot	Pilot	No Pilot	Pilot		
SG-16	250	300	450	300±70M	450±70M	0.12	30
SG-24		600	900	600±150M	900±150M	0.14	55
SG-32		1100	1600	1100±300M	1600±300M	0.16	100
SG-48		2200	3200	2200±600M	3200±600M	0.16	240

Dimensions

SG-16, 24, 32, 48

Unit: mm

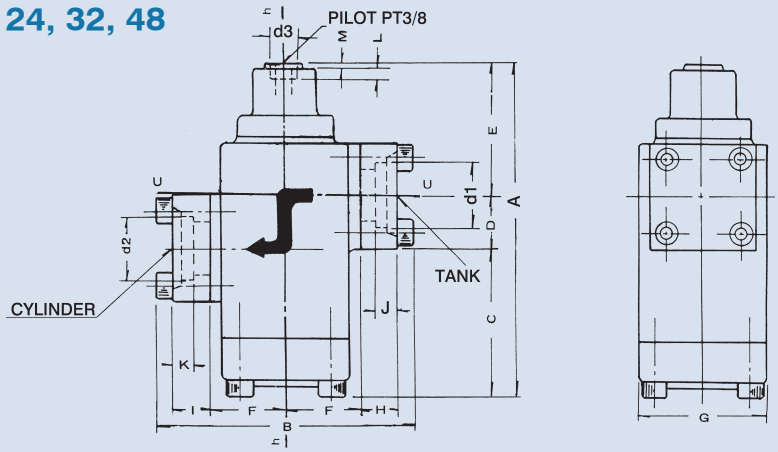

Model	A	B	C	D	E	F	G	H	I	J	K	L	M	d1	d2	d3
SG-16	322	242	136	53	133	70	120	35	24	20	20	21	12	61	61	PT 3/8
SG-24	396	294	168	90	160	92	150	30	44	13	21	28	12	95	95	PT 3/8
SG-32	556	358	215	96	255	120	194	30	44	28	28	25	12	116	138	28
SG-48	727	478	285	145	296	165	310	67	37	40	18	21	12	24	167	28

FLANGE-CLAMPED TYPE PREFILL VALVE

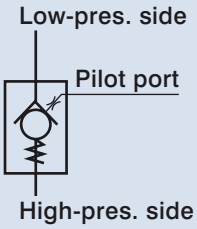

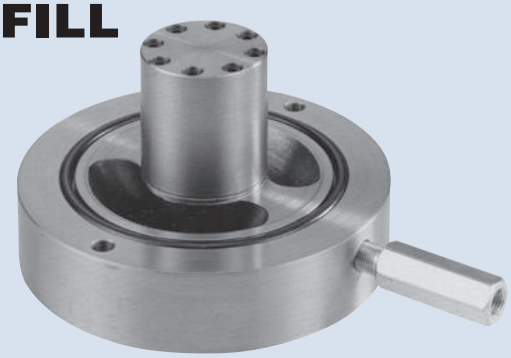

C

How to order

SVF - 100
1 2

1	Model	SVF: Steel body SCM4 (Max. 400 bar) SCF: Ductile iron body FCD50 (Max. 250 bar)
2	Valve size	

Specifications

Model	Port size Inch	Max. Flow (lpm)	Max. Operating Pressure (bar)	Pilot Ratio	Flange Bolts		Pipe size	Weight (kg)
					Number	Nor. Diamater		
SVF-32	2	160	400	3.6	4	M16	2B	1.3
SVF-40	2-1/2	250		3.3	4	M20	2.5B	2.2
SVF-50	3	400		3.8	6	M16	3B	2.9
SVF-63	3-1/2	630		4.2	8	M16	3.5B	4.5
SVF-80	4	1000		4.3	8	M20	4B	6.2
SVF-100	5	1600		4.3	10	M25	5B	12.3
SVF-125	8	2500		4.3	16	M25	8B	23
SVF-160	10	4000		4.2	16	M30	10B	50
SVF-200	12	7000		4.1	20	M30	12B	85
SVF-250	15	15000		4.4	24	M30	16B	156
SCF-32	2	160	250	3.6	4	M16	2B	1.3
SCF-50	3	400		3.8	6	M16	3B	2.9
SCF-63	3-1/2	630		4.2	8	M16	3.5B	4.5
SCF-80	4	1000		4.3	8	M20	4B	6.2
SCF-100	5	1600		4.3	10	M25	5B	12.3
SCF-125	8	2500		4.3	16	M25	8B	23

Dimensions / Performance curves

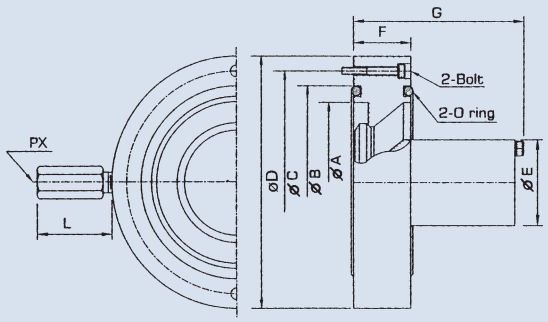

Model	øA	øB	øC	øD	øE	F	G	L	PX	Fixed bolt	O-ring
SVF-32, SCF32	48	63	-	82	33	28	70	62	PT 1/4"	-	1517-6
SVF-40	56.5	73	91	108	39	28	71.5			M4 x 30	1517-9
SVF-50, SCF50	72	90	112	128	42	29	91			M4 x 30	1517-14
SVF-63, SCF63	87	105	125	143	50	33.5	106			M5 x 35	P95
SVF-80, SCF80	108	130.5	150	169	57	38.5	115			M5 x 40	P120
SVF-100, SCF100	130	155	185	210	70	44	150			M6 x 45	P145
SVF-125, SCF125	170	200	226	248	89	51	195			M6 x 60	P185
SVF-160	218	250	284	310	120	70	230	70	PT 3/8"	M8 x 70	P235
SVF-200	272	310	355	390	145	95	300	85	PT 1/2"	M10 x 95	P295
SVF-250	350	398	445	490	176	110	390	85	PT 1/2"	M12 x 115	P375

Pilot port adaptor

Unit: mm

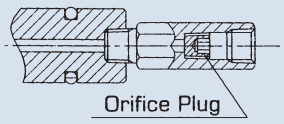

Model	Orifice	Plug
SVF (SCF)-32, 40, 50	0.7mm	PT1/8"
SVF (SCF)-63	0.8mm	
SVF (SCF)-80	1.0mm	
SVF (SCF)-100	1.2mm	
SVF (SCF)-125, 160	1.5mm	
SVF-200	1.8mm	PT1/4"

SVF(SCF)32-200

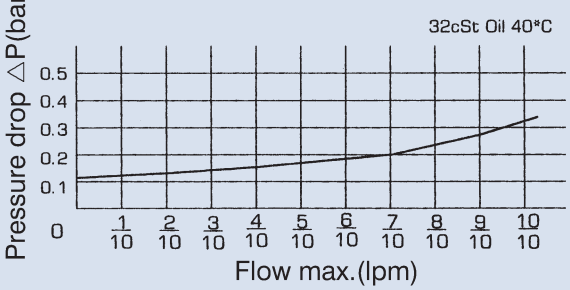

FLANGE-CLAMPED TYPE PREFILL VALVE

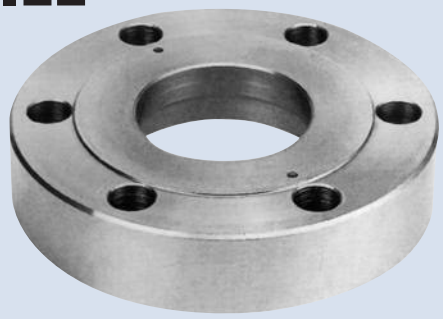

C

How to order

FGP - 100 - 2 - M25 - 5B

1 2 3 4 5

1	Model FGP: High-pres. Side flange FGT: Low-pres. Side flange
2	Valve size
3	Pressure range 2: 250 bar 4: 400 bar
4	Normal bolt size
5	Normal pipe diameter

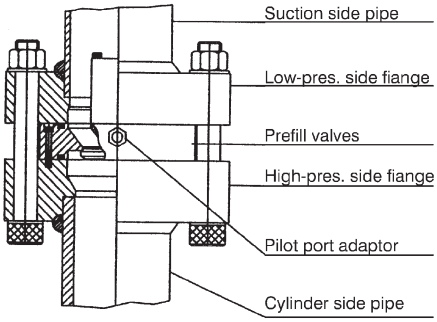

Dimensions

Unit: mm

FGT

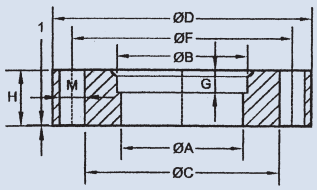

FGP

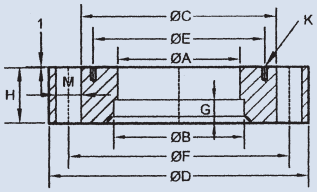

Model	øD	øF	øB	øA	øE	øC	H	G	K	M
FGP-32-M16/2B FGT-32-M16/2B	135	103.2	60.25	48	-	82	33	15	-	4-ø18
FGP-40-M20/2.5B FGT-40-M20/2.5B	165	130	77	57	91	107	42	15	2-M4	4-ø22
FGP-50-M16/3B FGT-50-M16/3B	180	146	90	72	112	128	42	15	2-M4	6-ø18
FGP-63-M16/3.5B FGT-63-M16/3.5B	195	161	102.2	87	125	143	52/47	15	2-M5	8-ø18
FGP-80-M20/4B FGT-80-M20/4B	230	192	115.2	108	150	169	52/47	15	2-M5	8-ø22
FGP-100-M25/5B FGT-100-M25/5B	280	239	141	130	185	210	68/62	25	2-M6	10-ø27

FGT

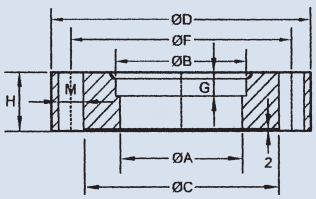

FGP

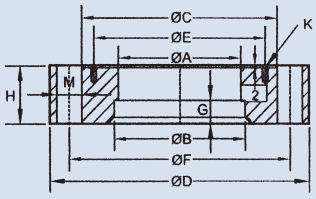

Model	øD	øF	øB	øA	øE	øC	H	G	K	M
FGP-125-M25/8B FGT-125-M25/8B	352	300	219.2	168	226	249	77/67	25	2-M6	16-ø27
FGP-160-M30/10B FGT-160-M30/10B	422	367	273.1	218	284	311	87/77	30	2-M6	16-ø33
FGP-200-M30/12B FGT-200-M30/12B	510	442	324	270	355	391	97/87	30	2-M10	20-ø33
FGP-250-M30/16B FGT-250-M30/16B	630	555	407	350	445	492	107/97	30	2-M12	24-ø33

FLANGE-CLAMPED TYPE PREFILL VALVE

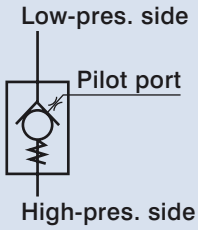

PF-80

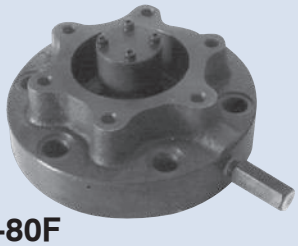

PF-80F

C

How to order

PF - 80 - F - W

1 2 3 4

1	Model
2	Valve size
3	Mounting type F: Flange None: Standard
4	Flange type None: No flange P: P port flange T: T port flange W: P&T port flange

Specifications

Model	Port Size (Inch)	Max. Operating Pressure (bar)	Max. Flow (lpm)	Cracking Pressure (bar)	Weight (kg)
PF-80 / PF-80F	3	250	400	0.12	2.8 / 8
PF-90 / PF-90F	3-1/2	250	630	0.12	3.8 / 11.3
PF-100 / PF-100F	4	250	1000	0.12	6 / 14.5
PF-125 / PF-125F	5	250	1600	0.12	10.8 / 23.8
PF-150 / PF-150F	6	250	2500	0.13	23.5 / 37
PF-200	8	250	4000	3	50

Dimensions

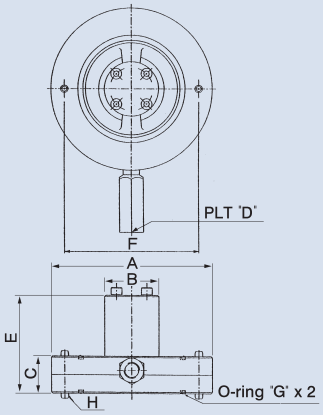

Model	A	B	C	D	E	F	G	H
PF-80	128	43	29	PT1/4	78	106	G80	6
PF-90	143	50	35	PT1/4	87	125	G100	6
PF-100	169	56	38.5	PT1/4	103	145	G115	6
PF-125	212	69	44	PT1/4	118	180	G140	6
PF-150	248	89	72	PT3/8	181	220	G180	10
PF-200	310	115	70	PT1/2	233	284	P235	10

PF-80,90,100F

PF-125F

PF-150F

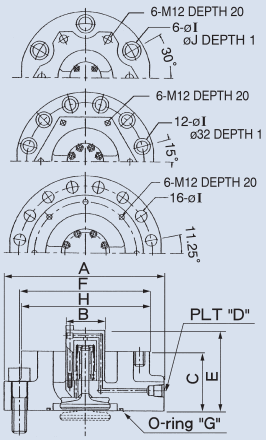

Unit: mm

Model	A	B	C	D	E	F	G	H	I	J
PF-80F	180	43	65	PT1/4	94	146	G80	142	18	26
PF-90F	200	50	70	PT1/4	119	165	G100	160	20	29
PF-100F	230	56	71	PT1/4	132.5	191	G115	170	22	32
PF-125F	270	69	85	PT1/4	165	230	G140	200	22	-
PF-150F	300	91	105	PT3/8	204	260	G180	225	22	-

MANUALLY OPERATED DIRECTIONAL VALVE

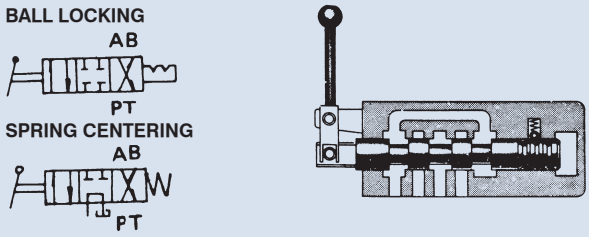

How to order

DM G - 02 - 3C6 - W

1 2 3 4 5

1	Model
2	Mounting type G: Sub-plate mounting T: Thread connection
3	Valve size
4	Valve function Same as solenoidvalve DSG series
5	Centered locking W: Spring centering O: Ball locking

Specifications

Model		Max. Operating Pressure(bar)	Max. Back Pressure (bar)	Max. Flow (lpm)	Weight (kg)		Bolt size DMG
Sub-Plate Mounting	Thread Connection				DMG	DMT	
DMG-02	-	250	140	40	1.5	1.5	M5 x 45L
DMG-03	DMT-03		100	70	3.3	4	M6 x 35L
-	DMT-04		140	120	-	7.5	-
DMG-06	DMT-06			350	12.5	12	M12 x 55L
-	DMT-10			500	-	23	-

Dimensions

DMT-03,04,06,10

Unit: mm

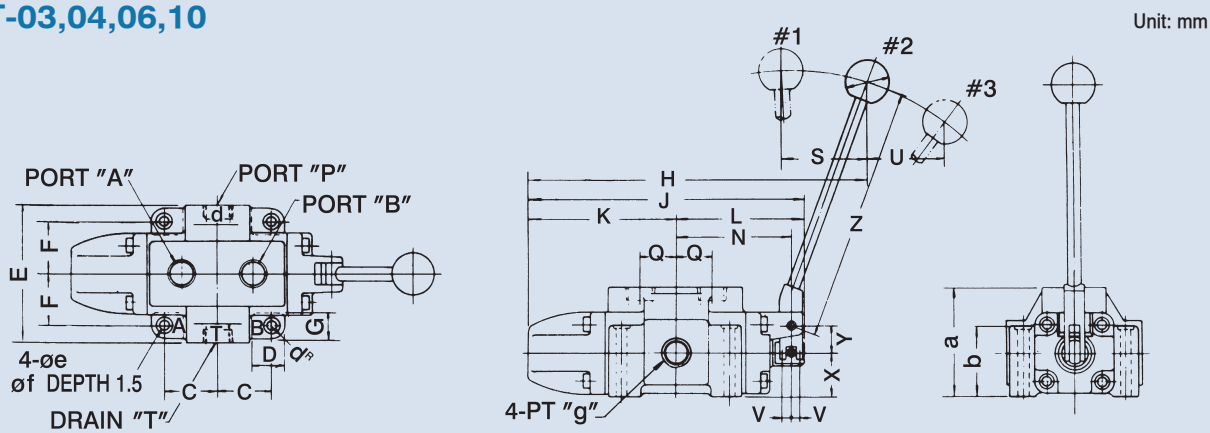

Model	C	D	E	F	G	H	J	K	L	N	Q	S	U	V	X	Y	Z	a	b	d	e	f	g(PT)
DMT-03	27	18	74	23	10	246	170	90	80	73.5	23	46	42	5	41	22	200	84.5	74	6	6M	-	3/8
DMT-04	45	33	109	40.5	18	280	222	116	106	96	25	75	60	10	37	19	240	90	55	9	9	14	1/2
DMT-06	50	30	130	49	20	320	255	137	118	107	33.5	86	76	9	40	25	250	100	65	12	11	17.5	3/4
DMT-10	67	40	162	62.5	33	402	320	173	147	135	40	102	90	12.5	50	35	270	124	82	15	13.5	21	1-1/4

MANUALLY OPERATED DIRECTIONAL VALVE

C

Dimensions

Unit: mm
(inch)

DMG-02 (ISO CETOP 3, NFPA D03, DIN NG 6)

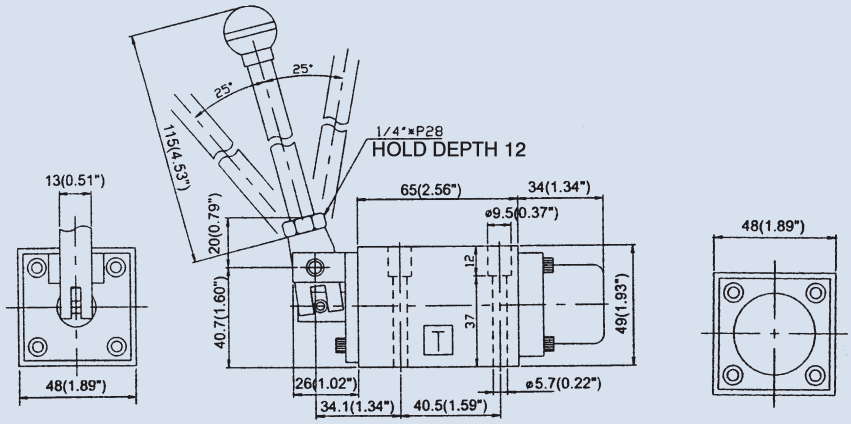

DMG-03G (ISO CETOP 5, NFPA D05, DIN NG 10)

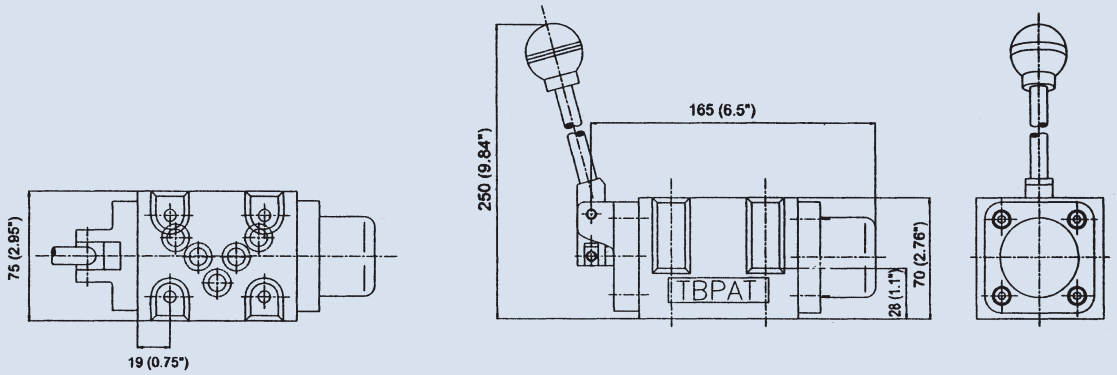

DMG-06 (ISO CETOP 8, NFPA D08, DIN NG 25)

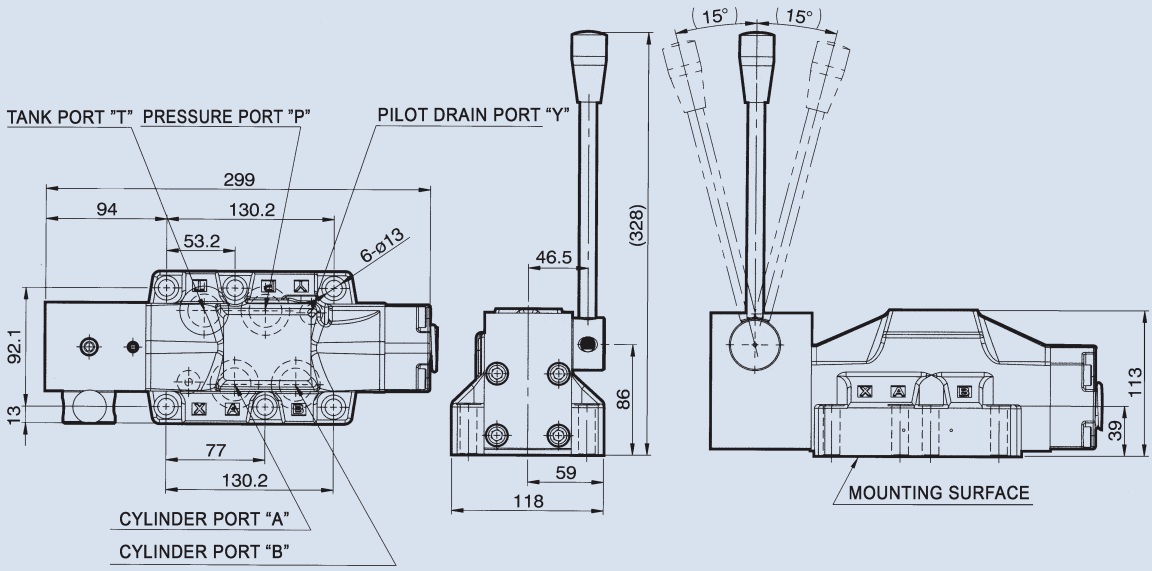

MANUALLY OPERATED DIRECTIONAL VALVE

HV-03T

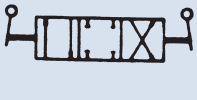

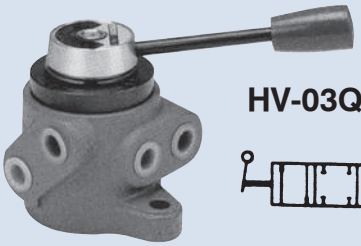

HV-03QT

DGH-T03

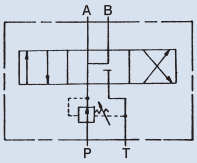

C

Specifications

Model	Port size (PT)	Max. Pressure (bar)	Flow rated (lpm)	Weight (kg)
HV-03T	3/8"	100	50	3.1
HV-03QT	3/8"	100	30	2.62
DGH-T03	1/4"	70	20	2.8

Dimensions

Unit: mm

HV-03T

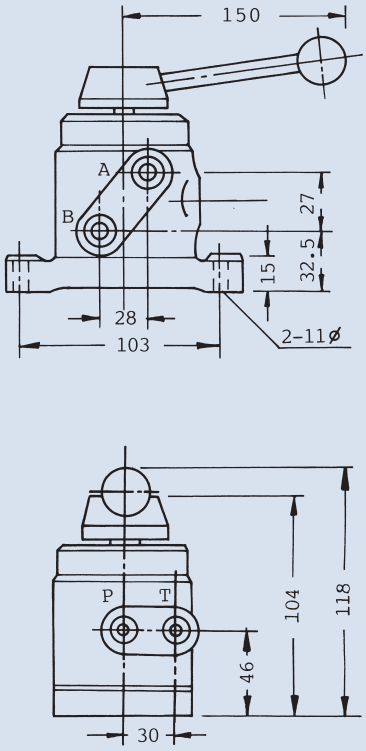

HV-03QT

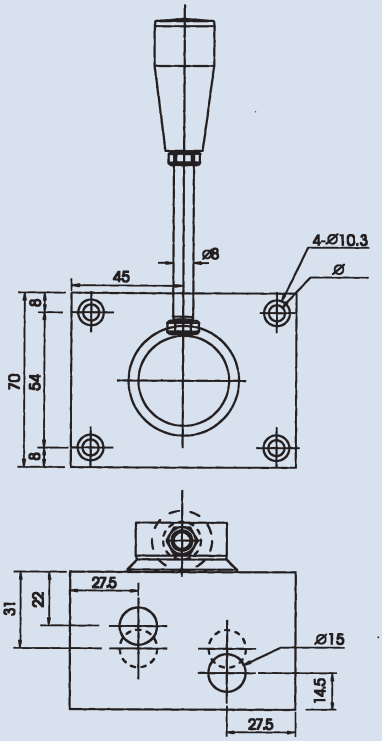

DGH-T03

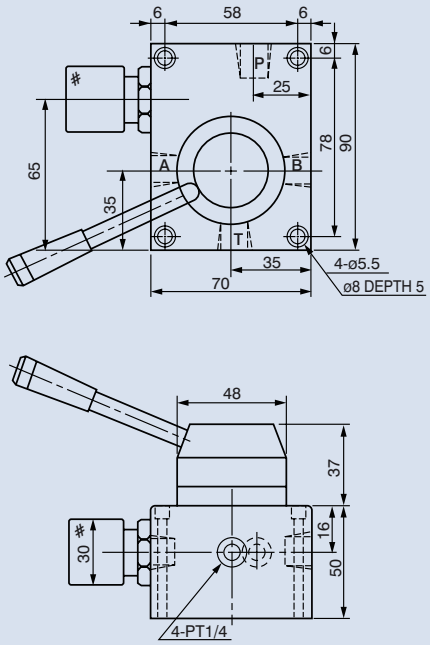

MANUALLY OPERATED DIRECTIONAL VALVE

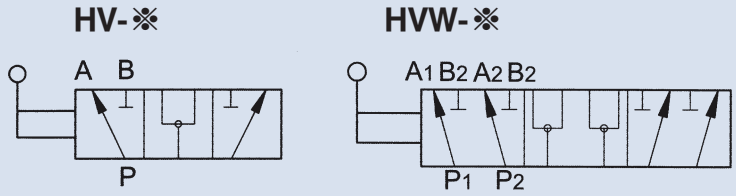

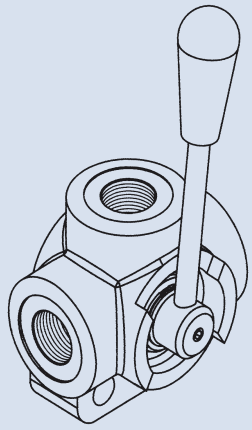

C

How to order

HV
HVW - 380
1 2

1	Model	HV single lever	HVW double lever		
2	Valve size	380: G3/8"	120: G1/2"	340: G3/4"	100: G1"

Specifications

Model	Max. Pressure (bar)	Max. Flow (lpm)	Weight (kg)	
			HV	HVW
HV HVW -380	315	50	1.4	2.8
HV HVW -120	280	80		
HV HVW -340	220	120	1.8	3.6
HV HVW -100	220	180		

Dimensions

Unit: mm (inch)

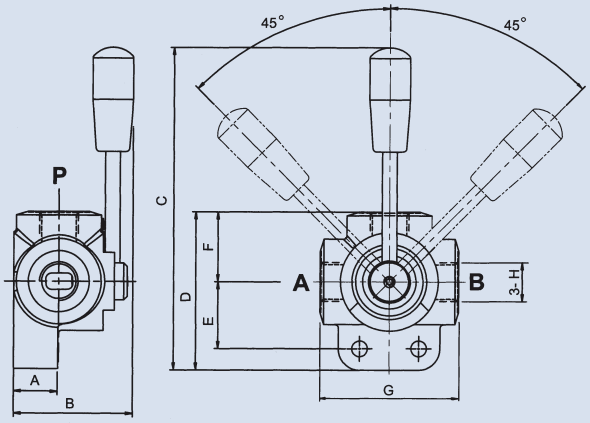

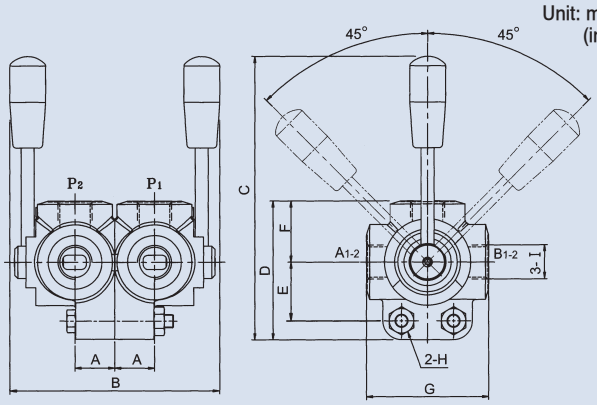

Model / Size	HV-380	HV-120	HV-340	HV-100
A	24 (0.95")		26.5 (1.04")	
B	64.5 (2.54")		68.1 (2.68")	
C	173.4 (6.83")		180.7 (7.11")	
D	85 (3.35")		99.4 (3.91")	
E	36 (1.42")		42 (1.65")	
F	37.5 (1.47")		44.6 (1.77")	
G	75 (2.95")		90 (3.54")	
H	G3/8	G1/2	G3/4	G1

Model / Size	HVW-380	HVW-120	HVW-340	HVW-100
A	24 (0.95")		26.5 (1.04")	
B	128.9 (5.08")		136.3 (5.37")	
C	173.4 (6.83")		180.7 (7.11")	
D	85 (3.35")		99.4 (3.91")	
E	36 (1.42")		42 (1.65")	
F	37.5 (1.47")		44.6 (1.76")	
G	75 (2.95")		90 (3.54")	
H	M8		M10	
I	G3/8	G1/2	G3/4	G1

SERVO CONTROL VALVE

FEATURES:

- Servo control accuracy up to ±0.005mm.
- Actuated by hydraulic system.
- The unit is applicable for plano-miller, milling machine, etc.
- Precision structure. Long service life.
- Various models for choice.

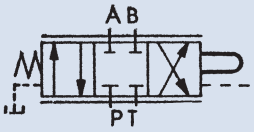

C

How to order

SA - G 03
1 2 3

1	Model	SA: With cover and long shaft SB: Without cover and short shaft
2	Mounting type	G: Sub-plate mounting
3	Valve size	

Specifications

Model	Max. Pressure (bar)	Oper. Pressure (bar)	Max. Back Pressure (bar)	Spool Shift mm	Max. Flow (lpm)	Weight (kg)
SA, SB-G02	70	12~15	20	±2	70	2.5
SA, SB-G03					90	3.5
SA, SB-G04					110	4.5

Examples of copy machining

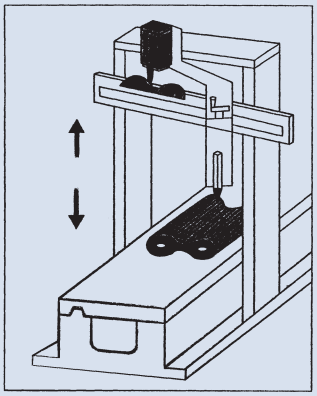

The servo control valve operated on a planomiller.

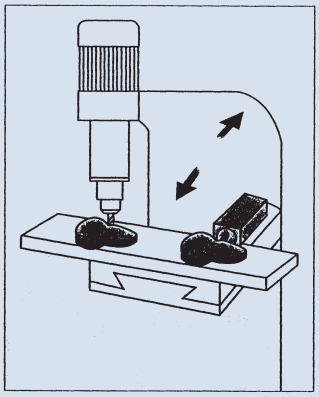

The servo control valve operated on a milling machine.

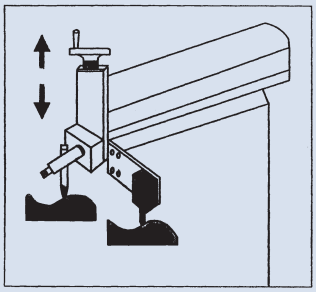

The servo control valve operated on a shaping machine.

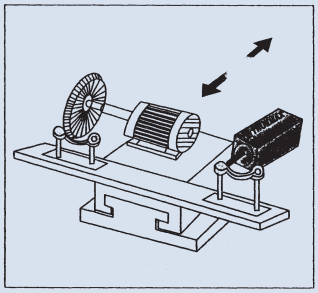

The servo control valve operated on a special purpose polishing machine.

Basic hydraulic circuit

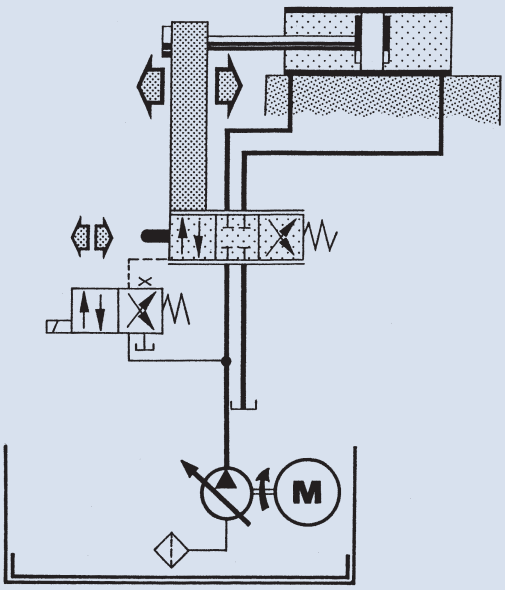

SERVO CONTROL VALVE

C

Dimensions

SA-02

Unit: mm

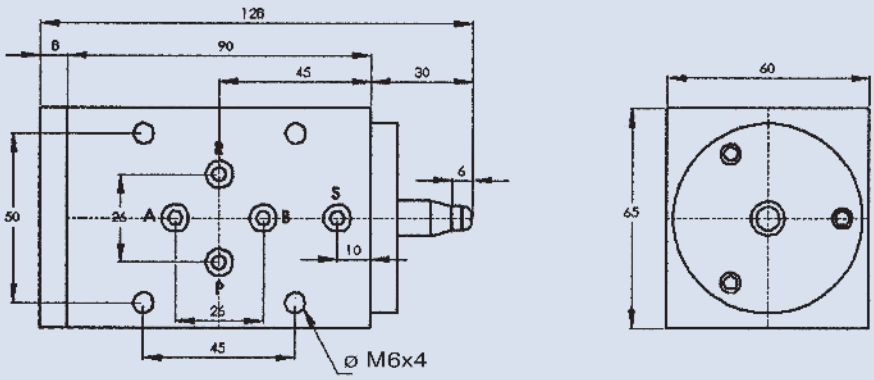

SA-03

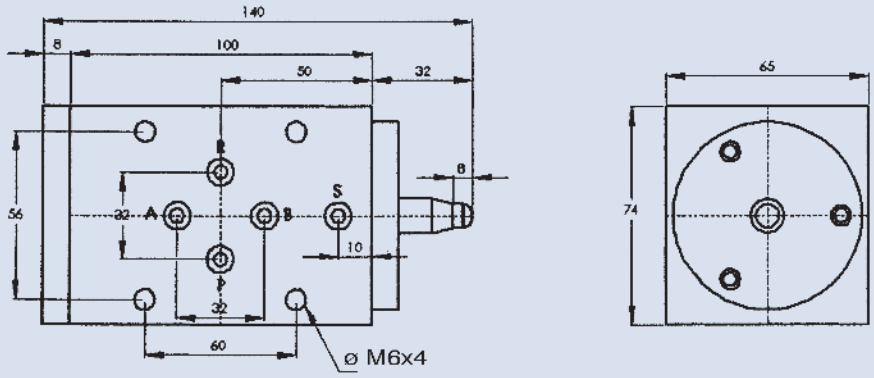

SA-04

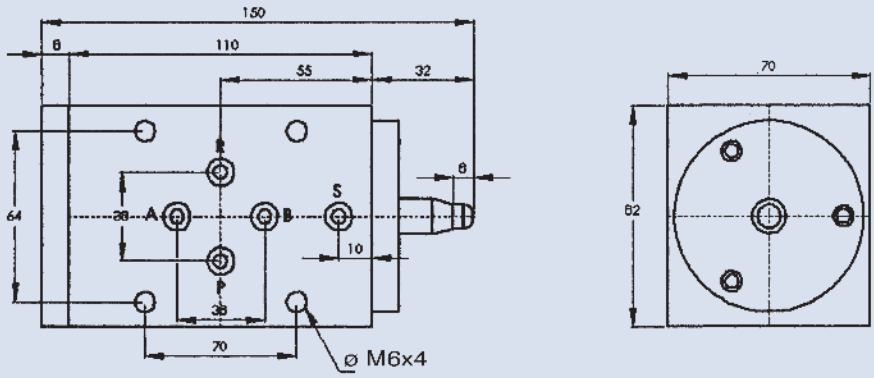

CAM OPERATED DIRECTIONAL VALVE

How to order

DC G - 01 - 2B2
1 2 3 4

1	Model
2	Mounting type G: Sub-plate mounting T: Thread connection
3	Valve size DCG-01: 1/8" (ISO CETOP 3, NFPA D03, DIN NG 6) DCT-01: PT 1/8"
4	Spool type 2B2 2B3 2B8

Specifications

Model		Max. Operating Pressure(bar)	Rated Flow (lpm)	Weight (kg)	Bolt Size
Sub-Plate Mounting	Thread Connection				
DCG-01	DCT-01	250	30	1.2	M5 x 50L

Dimensions

Unit: mm

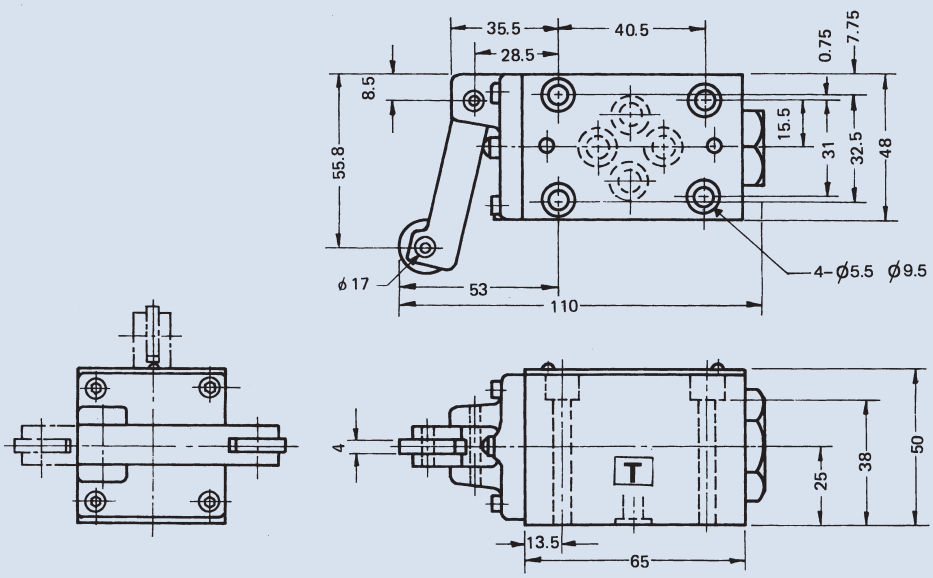

SOLENOID OPERATED DIRECTIONAL VALVE

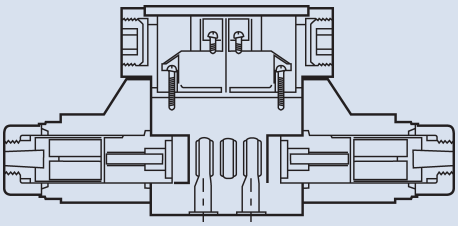

C

How to order

DSG - 02 - 3C2 - A2 - N

1 2 3 4 5

1	Model	
2	Nominal valve size	1/4" (ISO CETOP 3, NFPA D03, DIN NG 6)
3	Spool type	
4	Coil voltage	A11: AC110V (50/60HZ) A22: AC220V (50/60HZ) A24: AC240V (50HZ) A38: AC380V (50HZ) D1: DC12V D2: DC24V R1: R110V (50/60HZ) R2: R220V (50/60HZ)
5	No symbol: Joint box type N: Din connector type	

Specifications

ITEM	Model Numbers	Spool Type	Rated Flow lpm (gpm) AC / DC / R	Max. Flow lpm (gpm) AC / DC / R
1	DSG-3C2	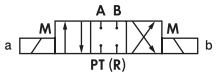	50 (13.2)	70 (18.5)
2	DSG-3C4	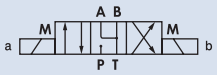	30 (7.9)	70 (18.5)
3	DSG-3C5			
4	DSG-3C10	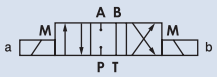		
5	DSG-3C60	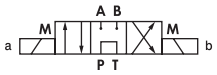	30 (7.9)	50 (13.2)
6	DSG-3C3			
7	DSG-2D2	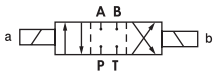	40 (10.6)	50 (13.2)
8	DSG-2D3			
9	DSG-2B3			
10	DSG-2B2	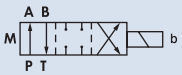	40 (10.6)	70 (18.5)
11	DSG-2B8	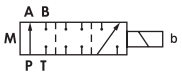		

SOLENOID OPERATED DIRECTIONAL VALVE

Dimensions

DSG-02-AC

Unit: mm
(inch)

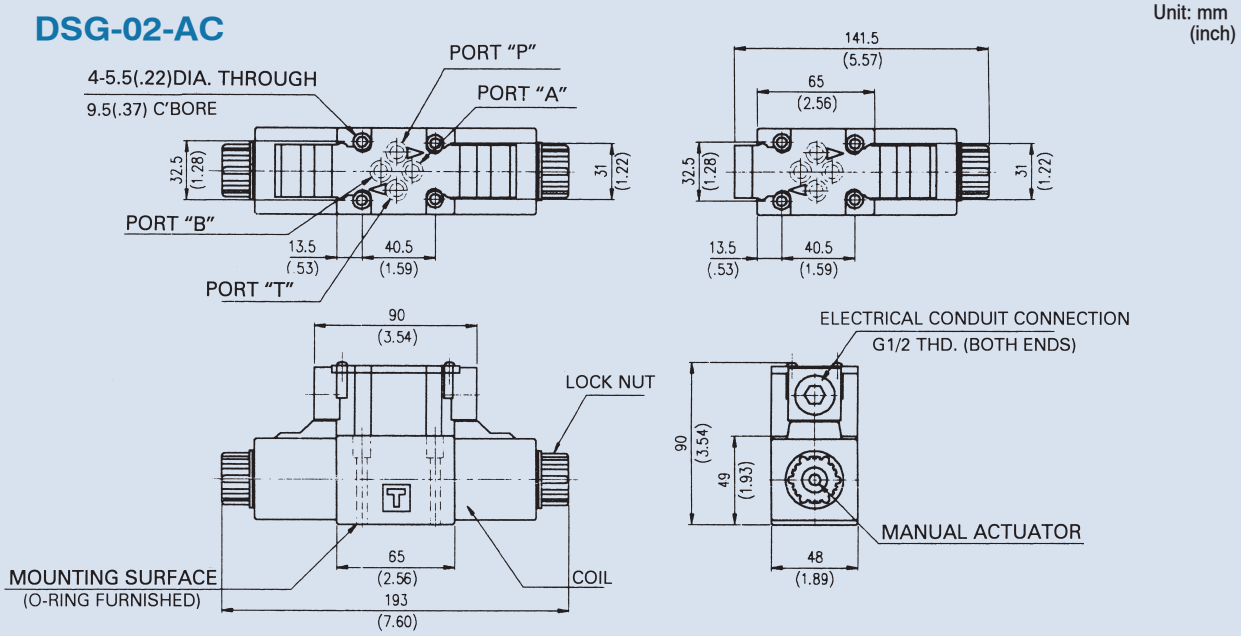

Parts name	Description	Tightening torque
Attachment SOC. HD. cap screw	M5 x 45Lg x 4pcs	5~7Nm
Attachment SOC. HD. cap screw	10-24UNC x 1-3/4"Lg x 4pcs	43~60in. lbs

DSG-02-DC/RAC

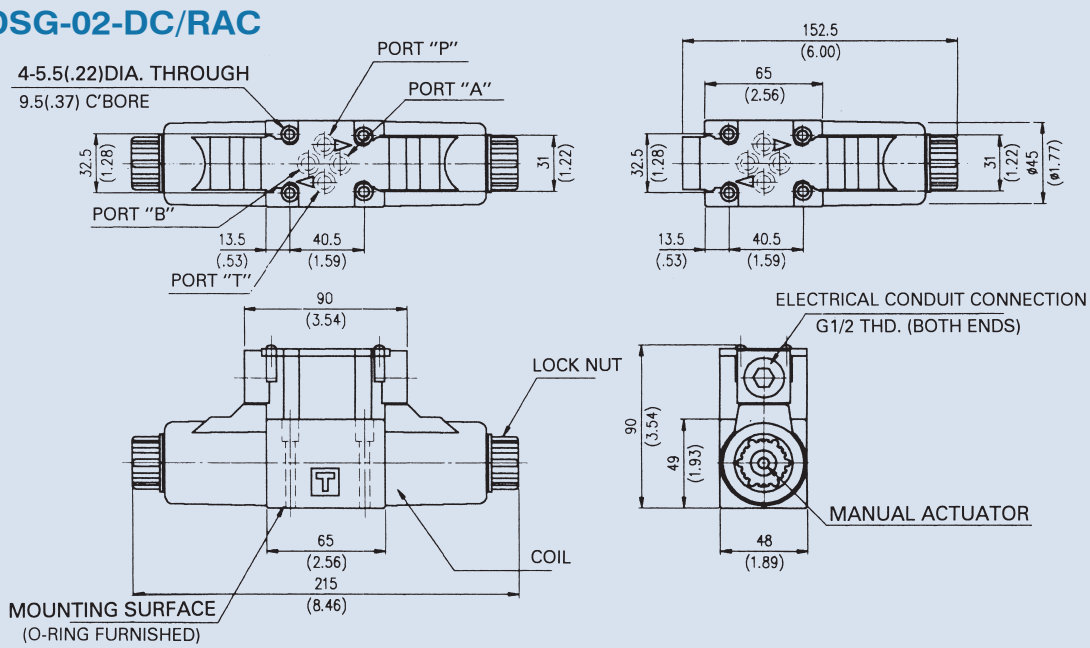

Parts name	Description	Tightening torque
Attachment SOC. HD. cap screw	M5 x 45Lg x 4pcs	5~7Nm
Attachment SOC. HD. cap screw	10-24UNC x 1-3/4"Lg x 4pcs	43~60in. lbs

SOLENOID OPERATED DIRECTIONAL VALVE

C

Dimensions

DSG-02-AC-N

Unit: mm
(inch)

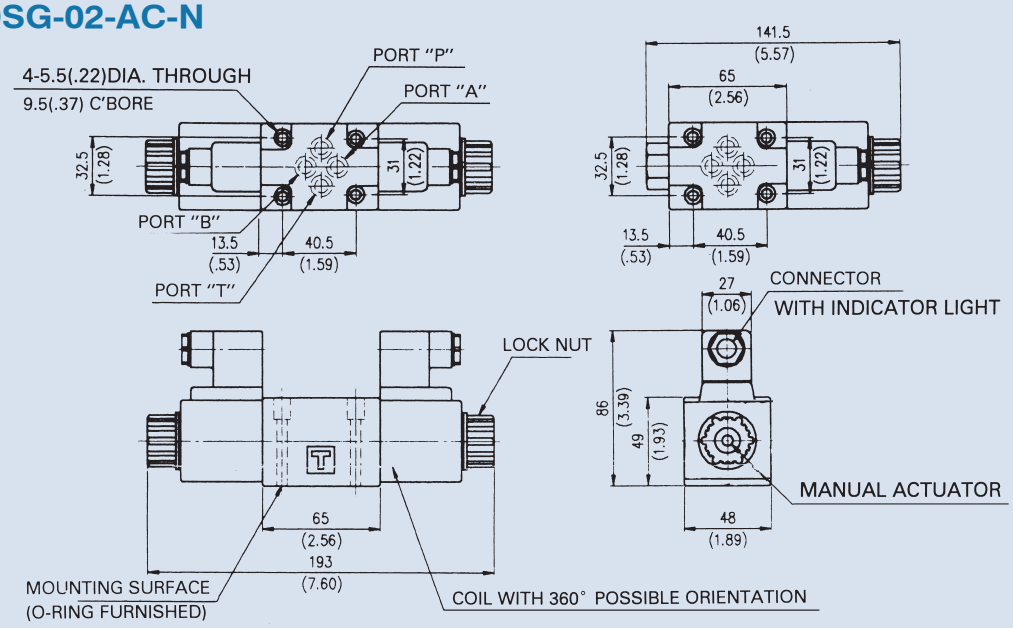

Parts name	Description	Tightening torque
Attachment SOC. HD. cap screw	M5 x 45Lg x 4pcs	5~7Nm
Attachment SOC. HD. cap screw	10-24UNC x 1-3/4"Lg x 4pcs	43~60in. lbs

DSG-02-DC/RAC-N

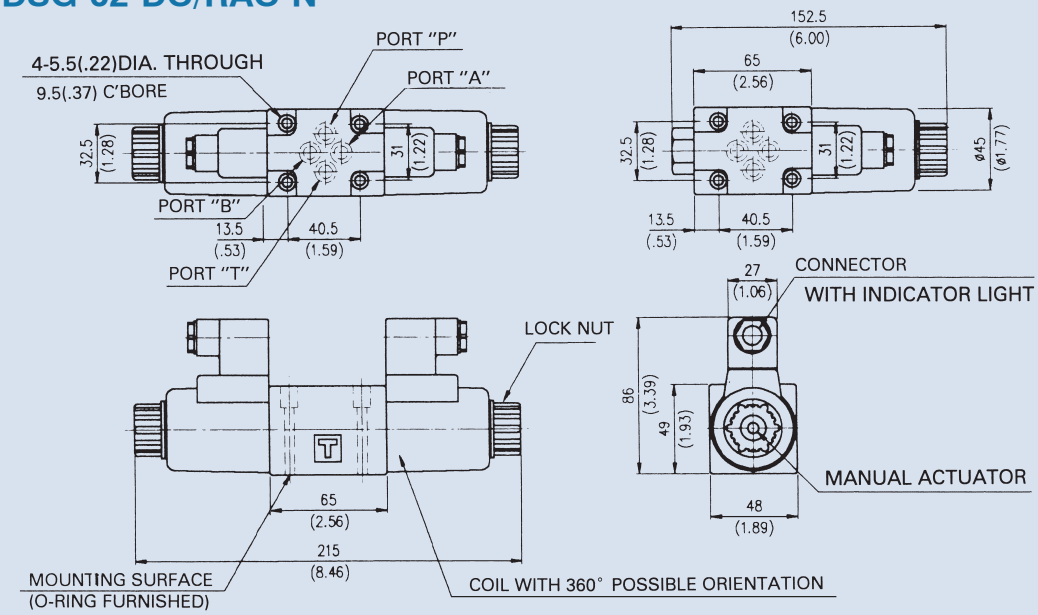

Parts name	Description	Tightening torque
Attachment SOC. HD. cap screw	M5 x 45Lg x 4pcs	5~7Nm
Attachment SOC. HD. cap screw	10-24UNC x 1-3/4"Lg x 4pcs	43~60in. lbs

SOLENOID OPERATED DIRECTIONAL VALVE

FEATURES:

- Plug-in solenoids for easier to change to coils.
- Easier maintenance with all spools and bodies are interchangeable by keeping the same limitation of internal leakage.
- Low noise level while all the movable parts are submerged in the working oil cushion impact reduces the operation noise.
- High voltage test up to 1500 v/min.
- Insulation resistance exceeds 100MΩ.
- Momnentary signal for shifting action at approx. 0.1 second.
- Longer service life for durability to 30,000,000 spool shifts.
- High class insulation coil for high temperature resistance up to 180 ˚C.

C

Specifications

Max. pressure	**P.A.B.**	**315 bar (4600psi)**	
Max. back pressure	**T**	**70~160 bar (1400~2300psi)**	
Weight kg (lb)	**Single solenoid**	**AC 1.5 (3.3)**	**DC(R) 1.6 (3.5)**
	Double solenoid	**AC 1.85 (4)**	**DC(R) 2 (4.4)**
Maximum frequency of operation (cycle/min)		**150**	
Ambient temperature range recommended		**5~60 ˚C (67~166 ˚F)**	
Using oil (cst)		**20~300**	
Filtration (micron)		**25**	

Performance curves

Performance chart

	P→A	P→B	A→T	B→T	P→T
3C2	③	③	③	③	—
3C3	①	①	③	③	④
3C4	③	③	①	①	—
3C5	①	⑥	③	⑤	④
3C60	⑥	⑥	⑤	⑤	④
3C10	③	③	③	①	—
2D2	②	②	⑤	⑤	—
2D3	①	①	③	③	—
2B2	②	②	⑤	⑤	—
2B3	④	③	①	④	—

Test fluid viscosity: 35 cst
Test temperature: 50 ˚C (122 ˚F)

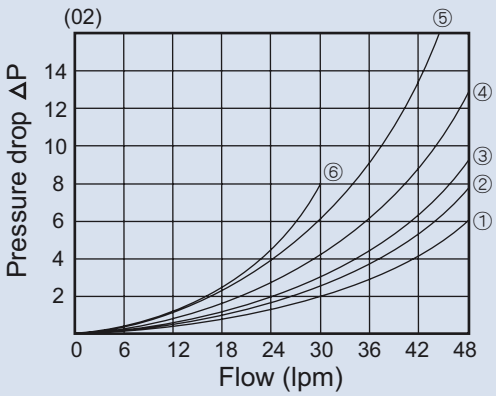

SOLENOID OPERATED DIRECTIONAL VALVE

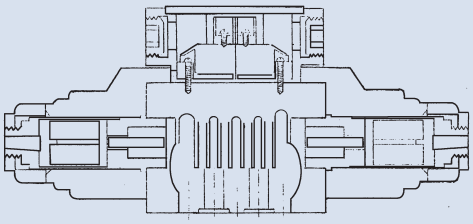

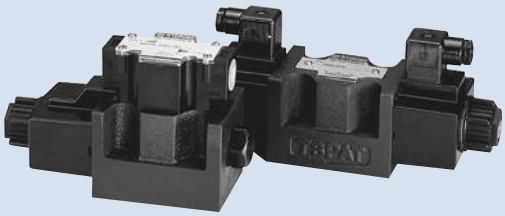

C

How to order

DSG - 03 - 3C2 - A2 - N

1 2 3 4 5

1	Model	
2	Nominal valve size	3/8" (ISO CETOP 5, NFPA D05, DIN NG 10)
3	Spool type	
4	Coil voltage	A11: AC110V (50/60HZ) A22: AC220V (50/60HZ) A24: AC240V (50HZ) A38: AC380V (50HZ) D1: DC12V D2: DC24V R1: R110V (50/60HZ) R2: R220V (50/60HZ)
5	No symbol: joint box type N: Din connector type	

ITEM	Model Numbers	Spool Type	Rated Flow lpm (gpm)	Max. Flow lpm (gpm)
			AC / DC / R	
1	DSG-3C2	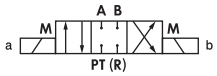	70 (18.5)	120 (31.7)
2	DSG-3C4			
3	DSG-3C5			
4	DSG-3C10			
5	DSG-3C60	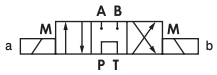	50 (13.2)	80 (21.1)
6	DSG-3C3			
7	DSG-2D2	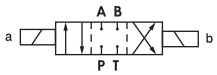		
8	DSG-2D3			
9	DSG-2B3			
10	DSG-2B2	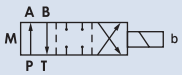	70 (18.5)	120 (31.7)
11	DSG-2B8	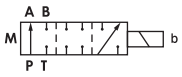		

SOLENOID OPERATED DIRECTIONAL VALVE

Dimensions

DSG-03-AC

Unit: mm
(inch)

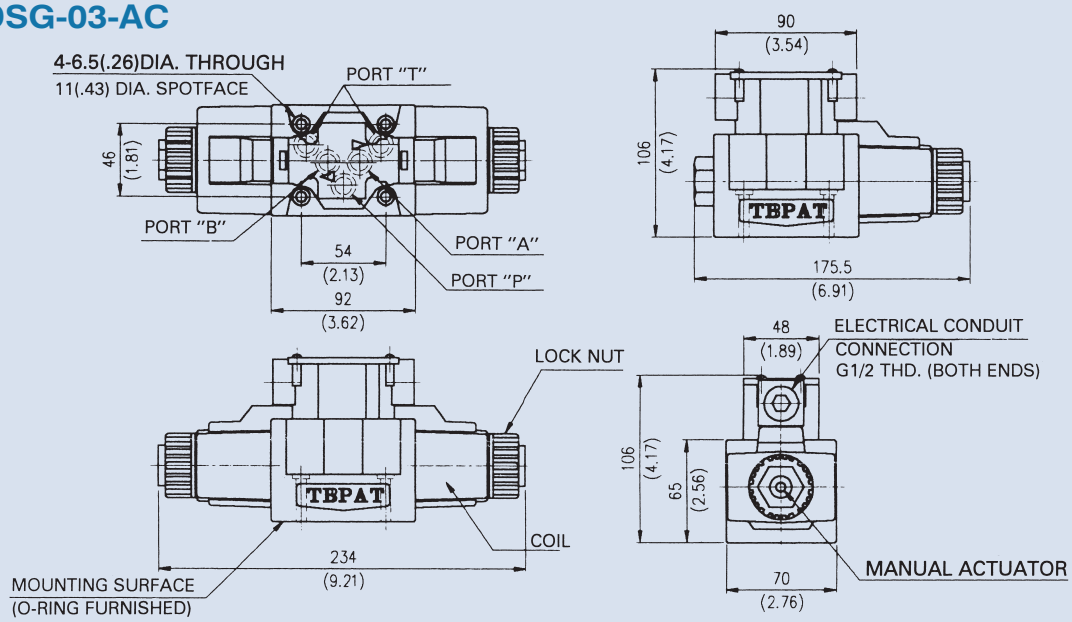

Parts name	Description	Tightening torque
Attachment SOC. HD. cap screw	M6 x 35Lg x 4pcs	12~15Nm
Attachment SOC. HD. cap screw	1/4-20UNC x 1-1/2"Lg x 4pcs	105~130in. lbs

DSG-03-DC/RAC

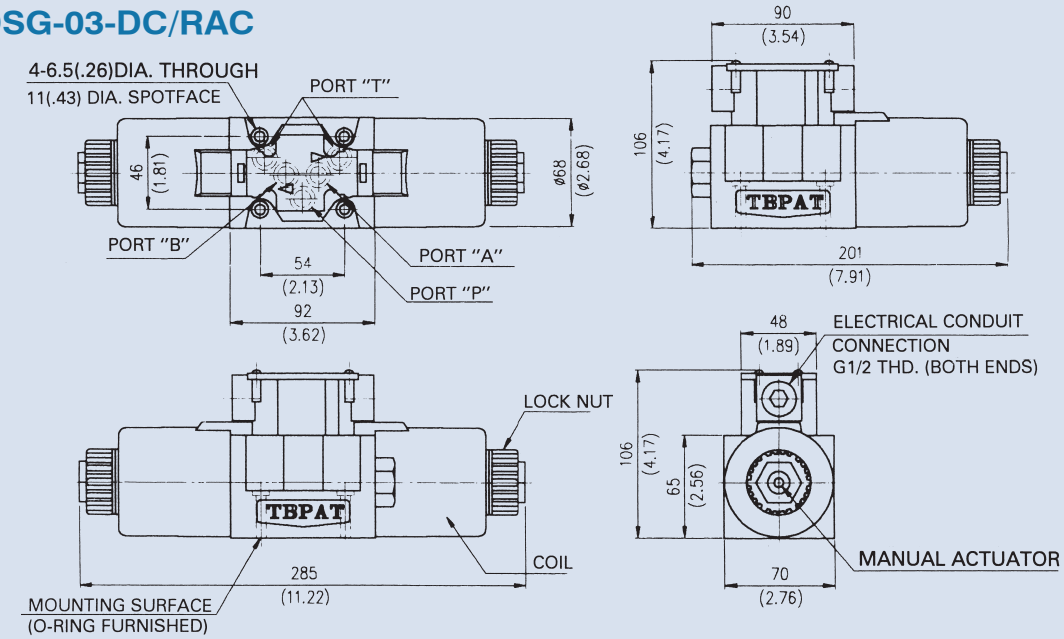

Parts name	Description	Tightening torque
Attachment SOC. HD. cap screw	M6 x 35Lg x 4pcs	12~15Nm
Attachment SOC. HD. cap screw	1/4-20UNC x 1-1/2"Lg x 4pcs	105~130in. lbs

SOLENOID OPERATED DIRECTIONAL VALVE

C

Dimensions

DSG-03-AC-N

Unit: mm
(inch)

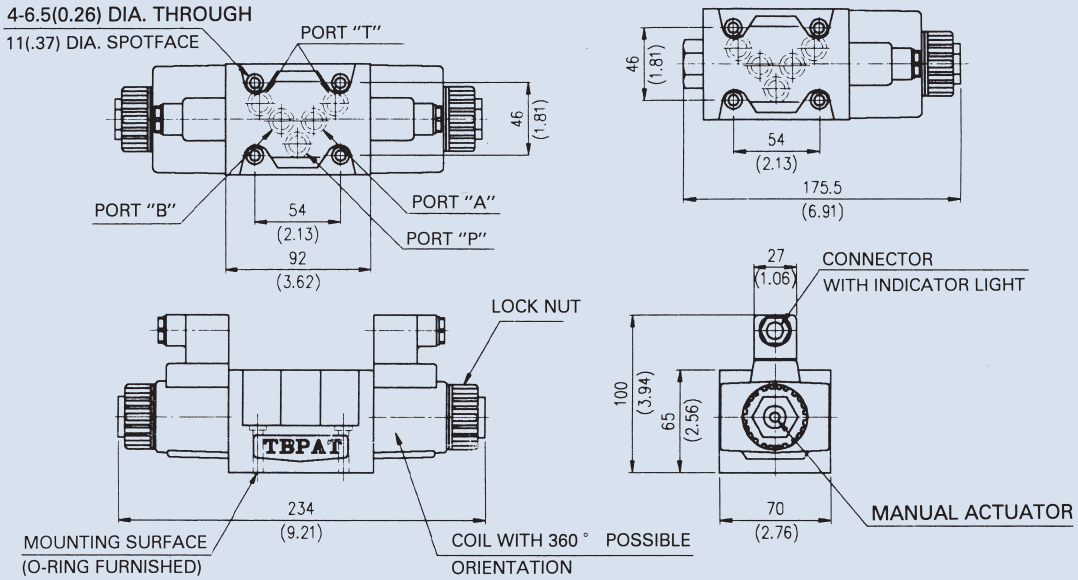

Parts name	Description	Tightening torque
Attachment SOC. HD. cap screw	M6 x 35Lg x 4pcs	12~15Nm
Attachment SOC. HD. cap screw	1/4-20UNC x 1-1/2"Lg x 4pcs	105~130in. lbs

DSG-03-DC/RAC-N

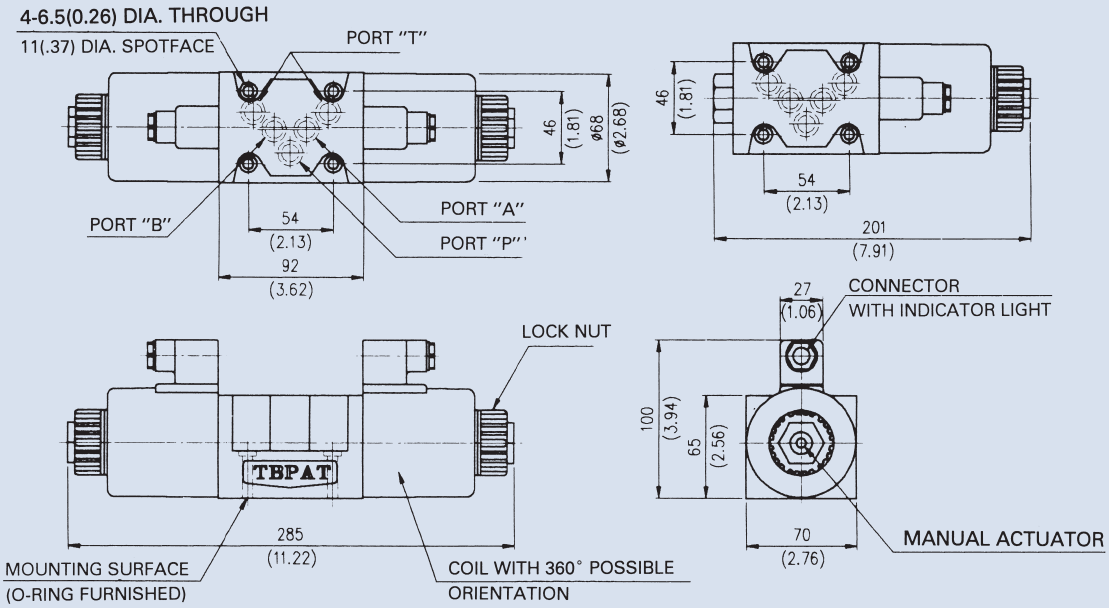

Parts name	Description	Tightening torque
Attachment SOC. HD. cap screw	M6 x 35Lg x 4pcs	12~15Nm
Attachment SOC. HD. cap screw	1/4-20UNC x 1-1/2"Lg x 4pcs	105~130in. lbs

SOLENOID OPERATED DIRECTIONAL VALVE

Specifications

Max. pressure	P.A.B.	315 bar (4600psi)	
Max. back pressure	T	70~160 bar (1400~2300psi)	
Weight kg (lb)	Single solenoid	AC 3.3 (7.3)	DC (R) 3.7 (8.2)
	Double solenoid	AC 4 (8.8)	DC (R) 4.8 (10.6)
Maximum frequency of operation (cycle/min)		150	
Ambient temperature range recommended		5~60 ˚C (67~166 ˚F)	
Using oil (cst)		20~300	
Filtration (micron)		25	

Performance curves

Performance chart

	P→A	P→B	A→T	B→T	P→T
3C2	③	③	③	③	—
3C3	①	①	③	③	④
3C4	③	③	①	①	—
3C5	①	⑥	③	⑤	④
3C60	⑥	⑥	⑤	⑤	④
3C10	③	③	③	①	—
2D2	②	②	⑤	⑤	—
2D3	①	①	③	③	—
2B2	②	②	⑤	⑤	—
2B3	④	③	①	④	—

Test fluid viscosity: 35 cst
Test temperature: 50 ˚C (122 ˚F)

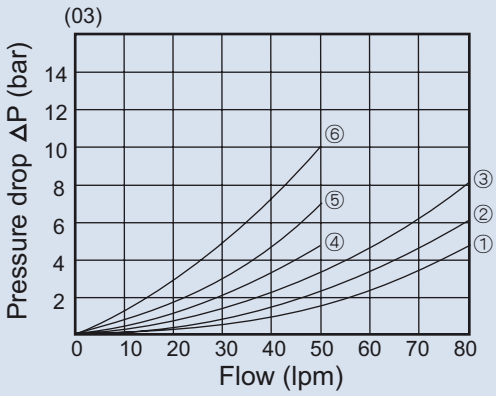

Technical data

Current AC/DC		AC				DC	
Frequency (Hz)		50	60	50	60	—	—
Rating voltage (V)		110	110	220	220	12	24
(01) 1/4	In-rush current	2.7	2.3	1.4	1.2	2	1
	Holding current	0.45	0.38	0.23	0.19		
(03) 3/8"	In-rush current	4.8	4.4	2.4	2.1	3.0	1.5
	Holding current	0.79	0.72	0.39	0.34		
DSG 01R	In-rush current	0.5	0.5	0.25	0.25	—	—
	Holding current	0.35	0.35	0.18	0.18	—	—
DSG 03R	In-rush current	0.66	0.66	0.33	0.33	—	—
	Holding current	0.45	0.45	0.28	0.28	—	—
Permissible voltage (V)		Rating voltage +10% or -15%					
Insulation resistance (MΩ)		More than 100MΩ (DC 500V insulation tester)					

Electrical wirings

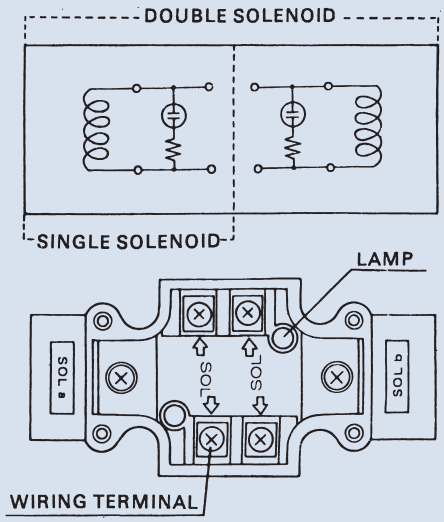

PILOT OPERATED DIRECTIONAL VALVE

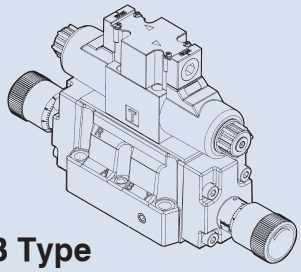

AB Type

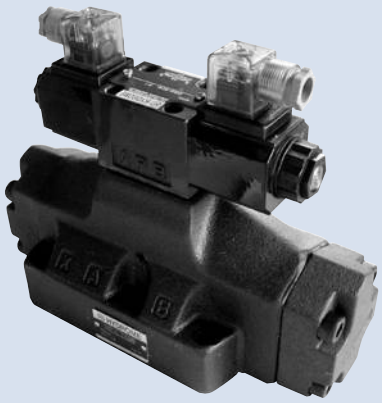

C

How to order

DSHG - 06 - 3C2 - AB - E - T - A1

1 2 3 4 5 6 7

1	Model	
2	Nominal valve size	03: 3/8" (ISO CETOP 5, NFPA D05, DIN NG 10) 04: 1/2"(ISO CETOP 7, NFPA D07, DIN NG 16) 06: 3/4" (ISO CETOP 8, NFPA D08, DIN NG 25) 10: 1-1/4" (ISO CETOP 10, NFPA D10, DIN NG 32)
3	Spool type	
4	AB: With stroke adjusting both ends A: With stroke adjusting port A B: With stroke adjusting port B	
5	E: External pilot Omit: Internal pilot	
6	T: Internal drain Omit: External drain	
7	Voltage	A11: AC110V (50/60HZ) A22: AC220V (50/60HZ) A24: AC240V (50HZ) A38: AC380V (50HZ) D1: DC12V D2: DC24V R1: R110V (50/60HZ) R2: R220V (50/60HZ)

Dimensions

Unit: mm

DSHG-03

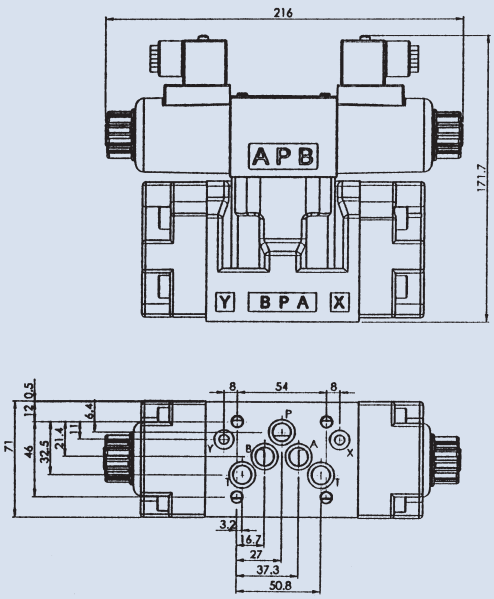

DSHG-04, 06, 10

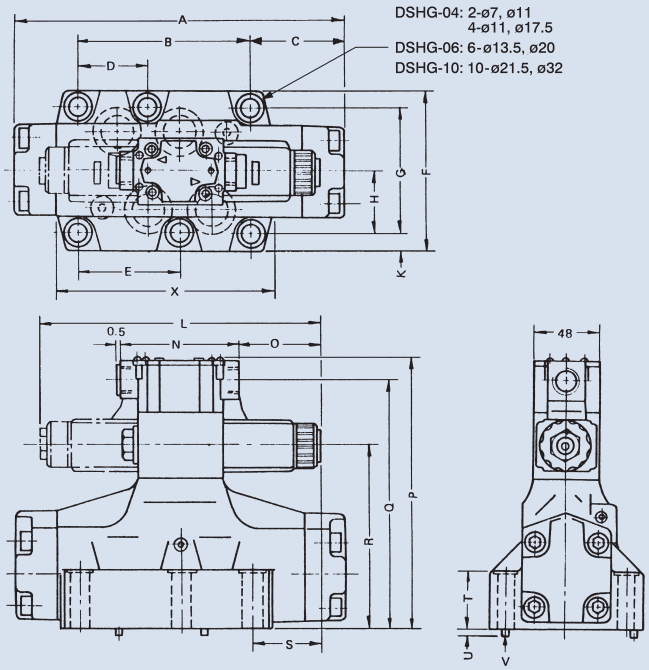

Model	A	B	C	D	E	F	G	H	K	L	N	O	P	Q	R	S	T	U	V	X
DSHG-04	204	101.6	50.4	34	50	91	69.8	-	9	215	90	60	180.3	163	116	53.4	35	4	2-ø3	-
DSHG-06	255	130.2	74.3	53.2	77	118	92.1	46.1	13	215	90	60	201.5	184	137	51.3	41	6	2-ø6	156
DSHG-10	384	190.5	116	76.2	114.3	198	158.8	79.4	19.6	215	90	60	264.5	247	200	28.5	45	6	2-ø6	233.8

PILOT OPERATED DIRECTIONAL VALVE

Specifications

Model Numbers			DSHG-03		DSHG-04		DSHG-06		DSHG-10	
ITEM	Model Numbers	Spool Type	Rated Flow (lpm)	Max. Flow (lpm)	Rated Flow (lpm)	Max. Flow (lpm)	Rated Flow (lpm)	Max. Flow (lpm)	Rated Flow (lpm)	Max. Flow (lpm)
1	DSHG-3C2	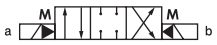	90	160	135	300	310	500	570	1100
2	DSHG-3C4		90	160	135	300	310	500	570	1100
3	DSHG-3C5		90	160	245	280	230	450	570	950
4	DSHG-3C10	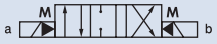	90	160	135	300	310	500	570	1100
5	DSHG-3C6	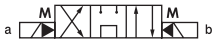	90	160	245	280	230	450	570	950
6	DSHG-3C3		90	160	135	300	230	450	570	950
7	DSHG-2D2	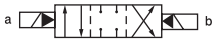	90	160	135	300	310	500	570	1100
8	DSHG-2D3		90	160	135	300	310	500	570	1100
9	DSHG-2B3		90	160	245	280	230	450	570	950
10	DSHG-2B2	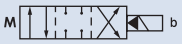	90	160	245	280	230	450	570	950
11	DSHG-3C9		90	160	245	280	230	450	570	950
Max. pressure		P.A.B.	315 bar (4600 psi)							
Max. back pressure		T	70~160 bar (1400~2300 psi)							
Weight kg (lb)		Single solenoid	6.4 (14.08)		7.6 (16.72)		13.3 (29.26)		51.6 (113.52)	
		Double solenoid	6.9 (15.18)		8 (17.6)		13.7 (30.14)		52 (114.40)	
Maximum frequency of operation (cycle/min)			120							
Ambient temperature range recommended			5~60 ˚C (67~166 ˚F)							
Using oil (cst)			20~300							
Filtration (micron)			25							

SPOOL FUNCTION TABLE

C

Specifications

Three Position Spring Center	Standard Type	Two Position No Spring	Standard Type	Two Position No Spring	Standard Type
3C2		2D2		2D2A	
3C3		2D3		2D3A	
3C4		2D7		2D4A	
3C40		2D8		2D40A	
3C5		Spring Offset	Standard Type	2D5A	
3C60				2D7A	
3C7				2D9A	
3C8		2B2		2D10A	
3C9		2B3		2D11A	
3C10		2B8		2D12A	
3C11					
3C12					

Two Position Spring Offset	Standard Type	Opposite Type	Two Position Spring Offset	Standard Type	Opposite Type
2B2A			2B2B		
2B3A			2B3B		
2B4A			2B4B		
2B40A			2B40B		
2B5A			2B5B		
2B60A			2B60B		
2B7A			2B7B		
2B8A			2B8B		
2B9A			2B9B		
2B10A			2B10B		
2B11A			2B11B		
2B12A			2B12B		

SOLENOID OPERATED STACK VALVE (SECTIONAL)

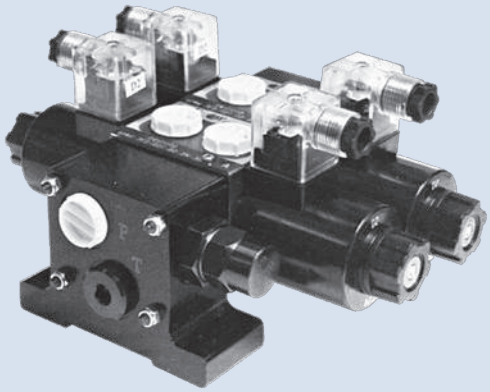

C

How to order

DMW - ※ - 02 T - ※ - ※ - ※ - ※

1 2 3 4 5 6 7 8

1	Model	
2	Spool type	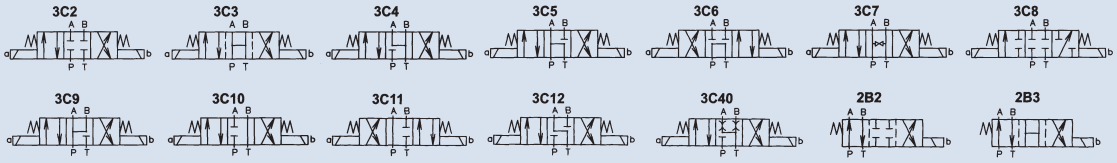
3	Norminal valve size 1/4"	
4	Mounting type	T: Thread connection
5	Voltage	A1: AC110V (60HZ) A115: AC115V (50HZ) A230: AC230V (50HZ) A2: AC220V (60HZ) D1: DC12V D2: DC24V
6	Wiring type	None: Din type X: Double lead
7	Number of valve block	1N~7N: 1~7 blocks
8	Release valve (selected mating) for inlet section	S1: DC12V S2: DC24V S3: RAC110V S4: RAC220V NC: Normal closed NO: Normal open

Specifications

Model	Max. Pressure (bar)	Max. Flow (lpm)	Weight (kg)
DMW-※-02T	250	70	

Dimensions

Unit: mm

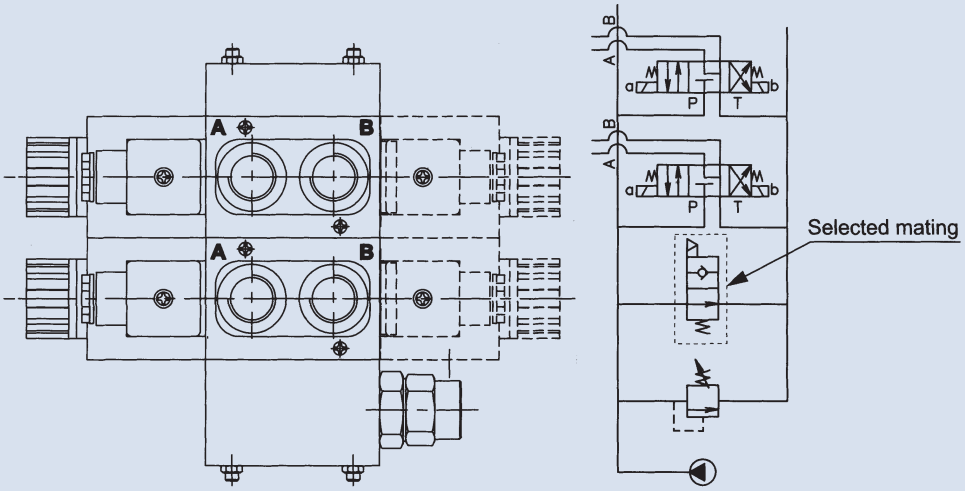

SOLENOID OPERATED STACK VALVE (SECTIONAL)

C

Dimensions

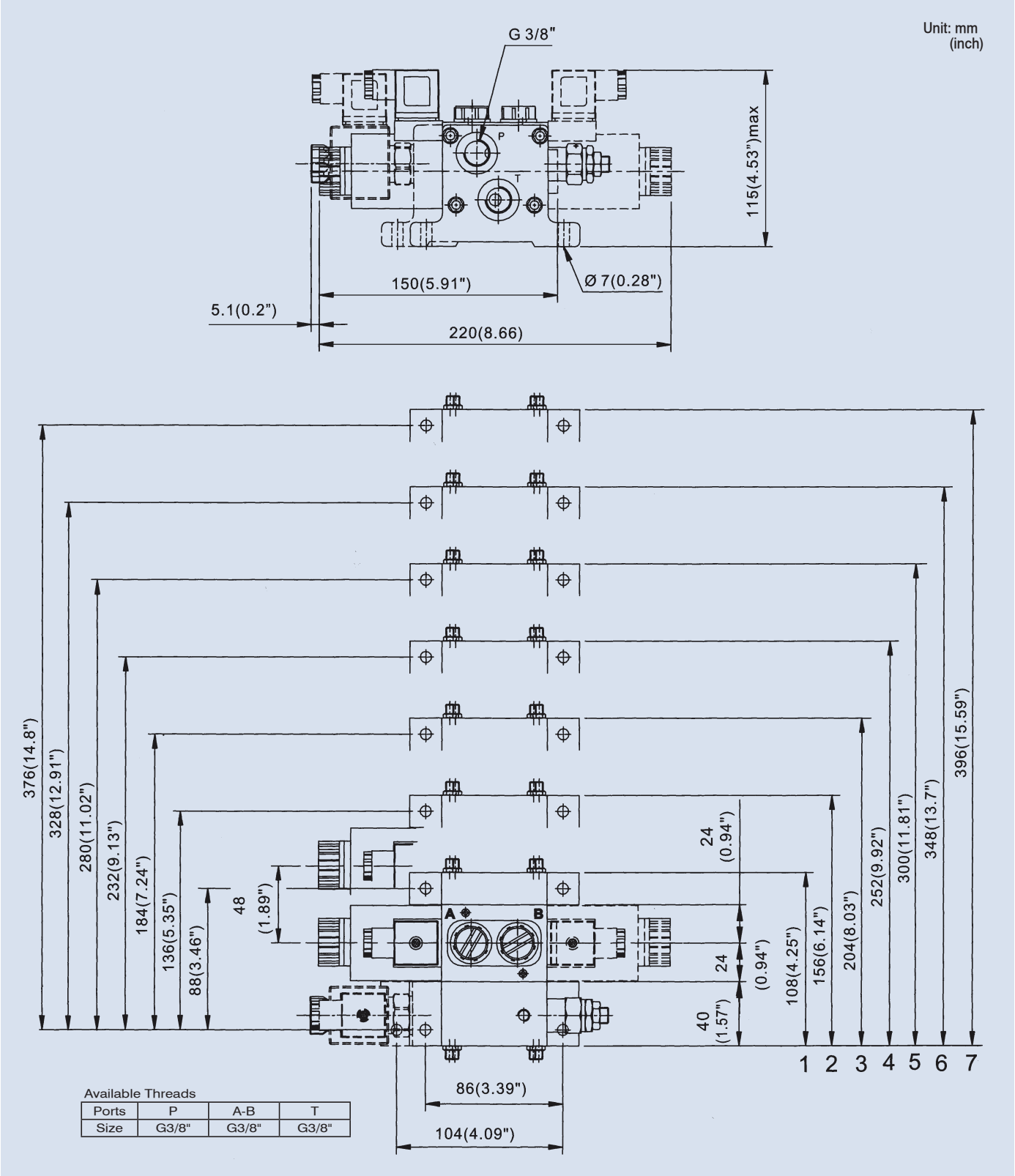

Available Threads

Ports	P	A-B	T
Size	G3/8"	G3/8"	G3/8"

SOLENOID MANUAL OPERATED DIRECTIONAL VALVE

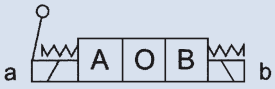

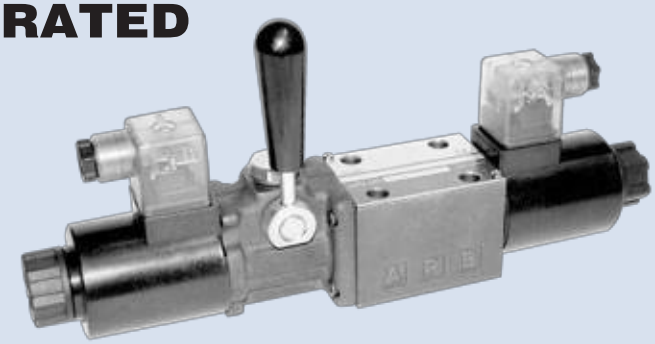

How to order

WED - ※ - 02 G - ※ - 30

1 2 3 4 5 6

1	Model	
2	Spool type (refer to page 66)	
3	Norminal valve size 1/4" (ISO CETOP 3, NFPA D03, DIN NG 6)	
4	Mounting type	G: Sub-plate mounting
5	Voltage	A1: AC110V (60HZ) AC115: AC115V (50HZ) A230: AC230V (50HZ) A2: AC220V (60HZ) D1: DC12V D2: DC24V R1: RF110V (50/60HZ) R2: RF220V (50/60HZ)
6	Wiring type	30: Din type 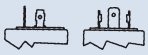 40: Amp type

Specifications

Model	Max. Pressure (bar)	Max. Flow (lpm)	Weight (kg)			
			AC		DC (RF)	
			Single Sol.	Double Sol.	Single Sol.	Double Sol.
WED-※-02G	315	100	2	2.35	2.1	2.5

Dimensions / Performance curve

Unit: mm
(inch)

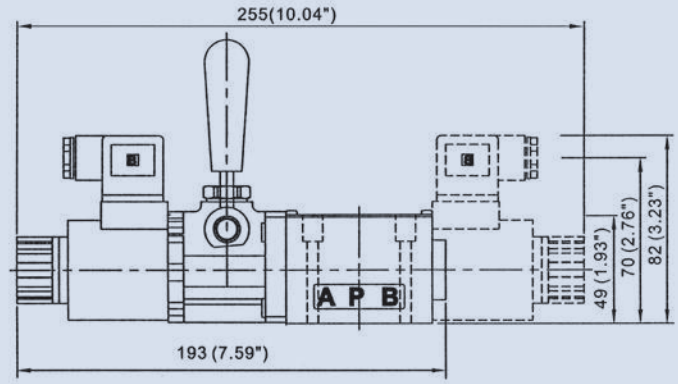

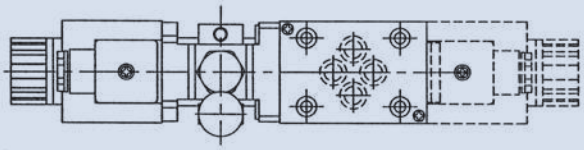

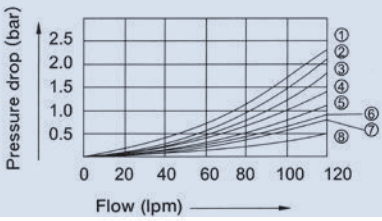

SOLENOID OPERATED CHECK VALVE

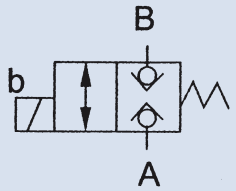

C

How to order

LVS - 02 G - A2
1 2 3 4

1	Model
2	Norminal valve size 02: 1/4" (ISO CETOP 3, NFPA D03, DIN NG 6) 03: 3/8" (ISO CETOP 5, NFPA D05, DIN NG 10)
3	Control type
4	Voltage A1: AC115V (50HZ) A2: AC230V (50HZ) D1: DC12V D2: DC24V

Specifications

Model	Max. Operating Pressure (bar)	Max. Flow (lpm)	Weight (kg)
LVS-02G	250	35	1.6
LVS-03G		50	3.5

Dimensions

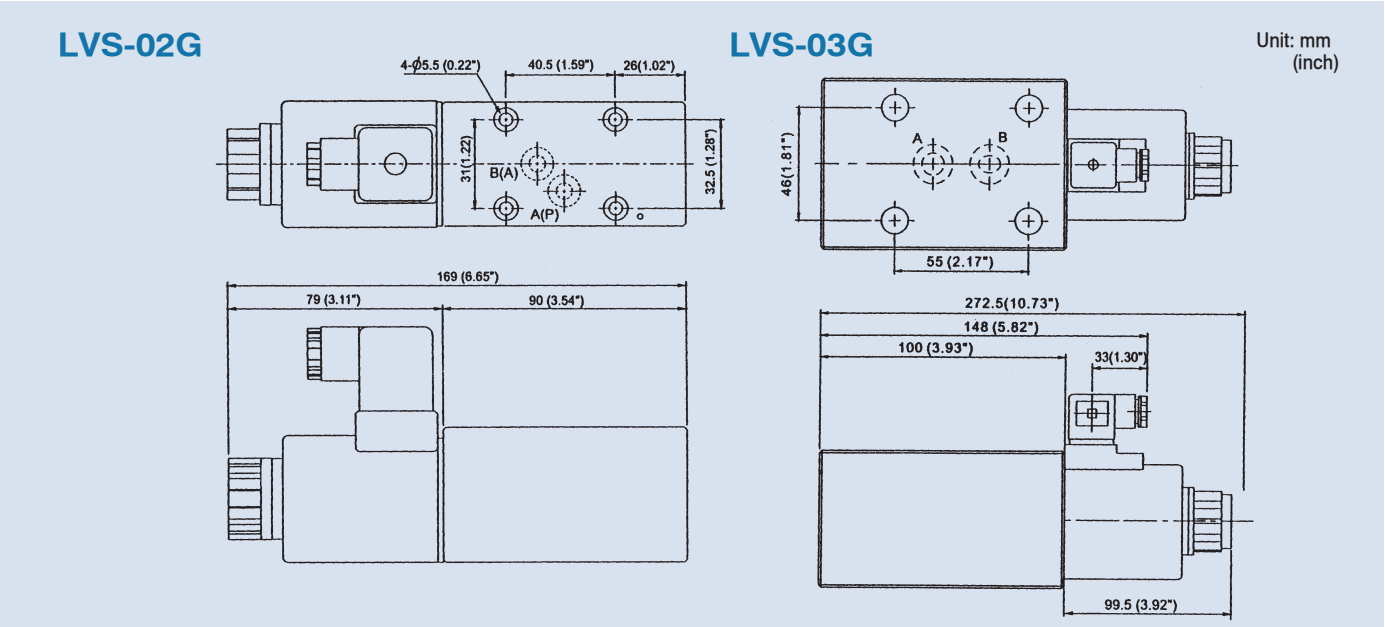

LIFT VALVE

Normal closed

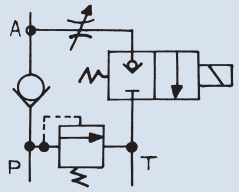

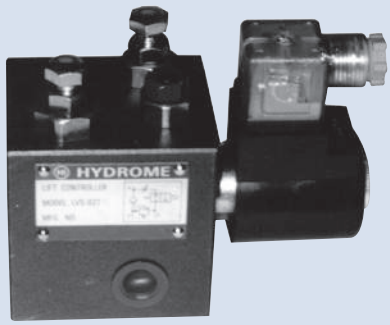

C

How to order

LVS - 03 T - NC - A22

1 2 3 4 5

1	Model LVS: Ductile iron body
2	Valve size 03: 3/8"
3	Mounting type T: Thread connection
4	NC: Normal closed NO: Normal open
5	Voltage A11: AC110V (50/60HZ) A22: AC220V (50/60HZ) D1: DC12V D2: DC24V

Specifications

Model	Max. Operating Pressure (bar)	Max. Flow (lpm)	Max. Frequency (cpm)	Weight (kg)
LVS-03T	250	25	120	2.8

Dimensions / Performance curves

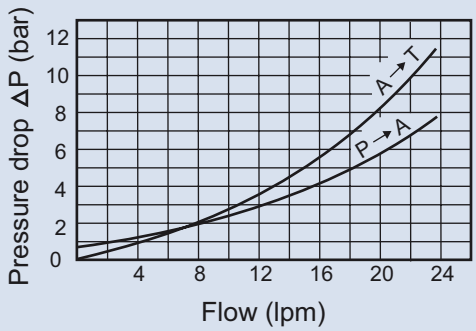

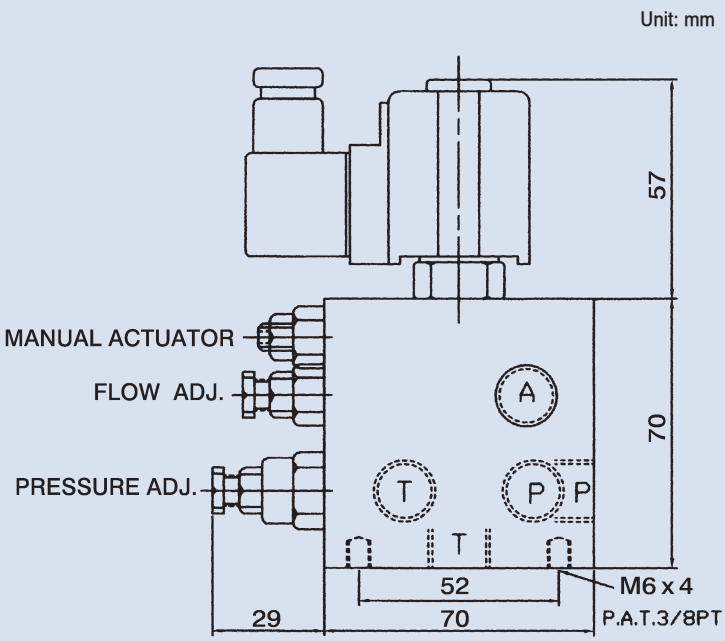

LIFT VALVE

Normal closed

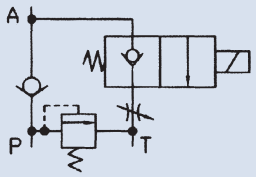

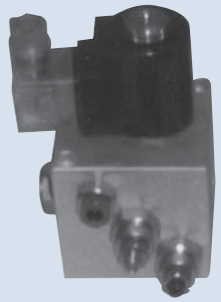

C

How to order

KVS - 03 TL - NC - A22

1	2	3	4	5

1	Model Aluminum alloy body
2	Valve size 03: 3/8" 04: 1/2"
3	Mounting type TL: Thread connection
4	NC: Normal closed NO: Normal open
5	Voltage A11: AC110V (50/60HZ) A22: AC220V (50/60HZ) D1: DC12V D2: DC24V

Specifications

Model	Max. Operating Pressure (bar)	Max. Flow (lpm)	Rated Flow (lpm)	Weight (kg)
KVS-03TL	250	25	20	1.25
KVS-04TL		50	40	1.5

Dimensions / Performance curves

Unit: mm

KVS-03TL

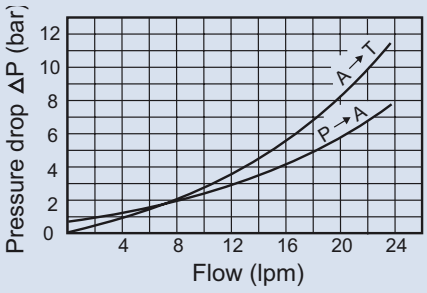

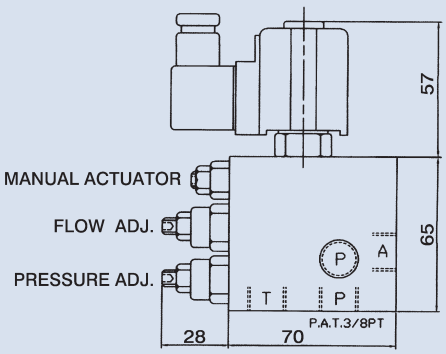

※Holes for bolt fixing: 2-ø7 Through

KVS-04TL

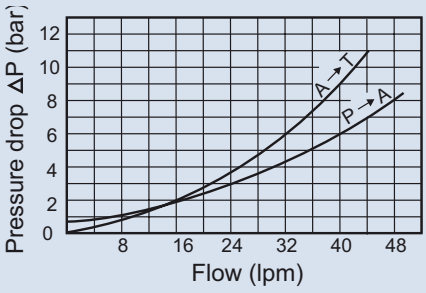

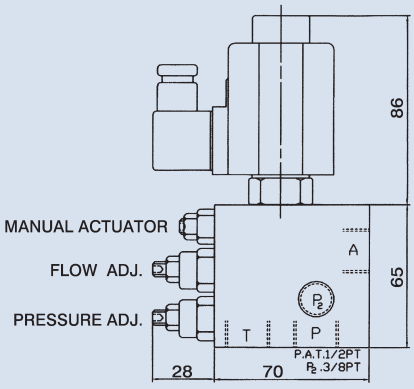

LIFT VALVE

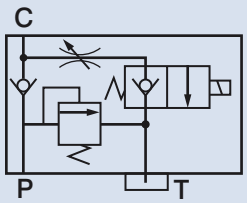

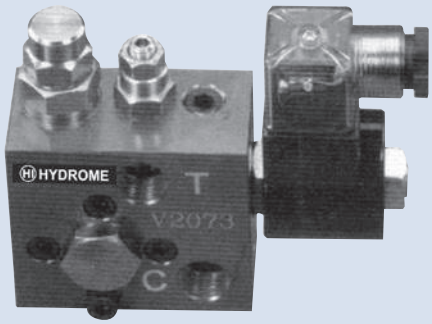

C

How to order

HV2073 - T 03 - NC - ※ - A22

1 2 3 4 5 6

1	Model Aluminum alloy body Can be mounted on gear pump HGP-2A
2	Thread connection type
3	Port size 03: PT 3/8"
4	NC: Normal closed NO: Normal open
5	None: General use OM: With manual actuator
6	Voltage A11: AC110V (50/60HZ) A22: AC220V (50/60HZ) D1: DC12V D2: DC24V

Specifications

Model	Max. Operating Pressure (bar)	Max. Flow (lpm)	Rated Flow (lpm)	Weight (kg)
HV2073	250	20	15	0.93

Dimensions

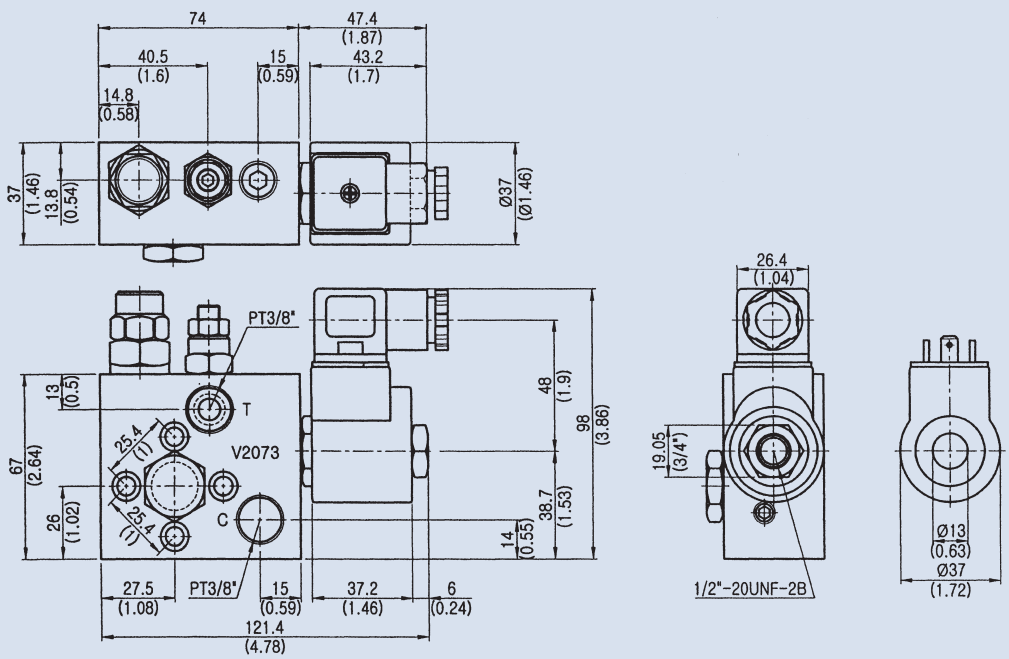

LIFT VALVE

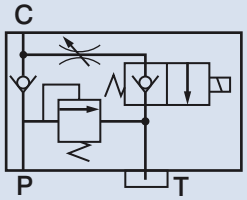

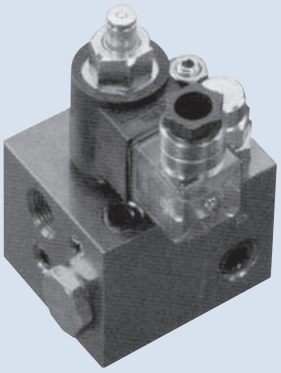

C

How to order

HV2074 - T 03 - NC - ※ - A22

1 2 3 4 5 6

1	Model Aluminum alloy body
2	Thread connection type
3	Port size 03: PT 3/8"
4	NC: Normal closed NO: Normal open
5	None: General use OM: With manual actuator
6	Voltage A11: AC110V (50/60HZ) A22: AC220V (50/60HZ) D1: DC12V D2: DC24V

Specifications

Model	Max. Operating Pressure (bar)	Max. Flow (lpm)	Rated Flow (lpm)	Weight (kg)
HV2074	250	20	15	1.05

Dimensions

Unit: mm
(inch)

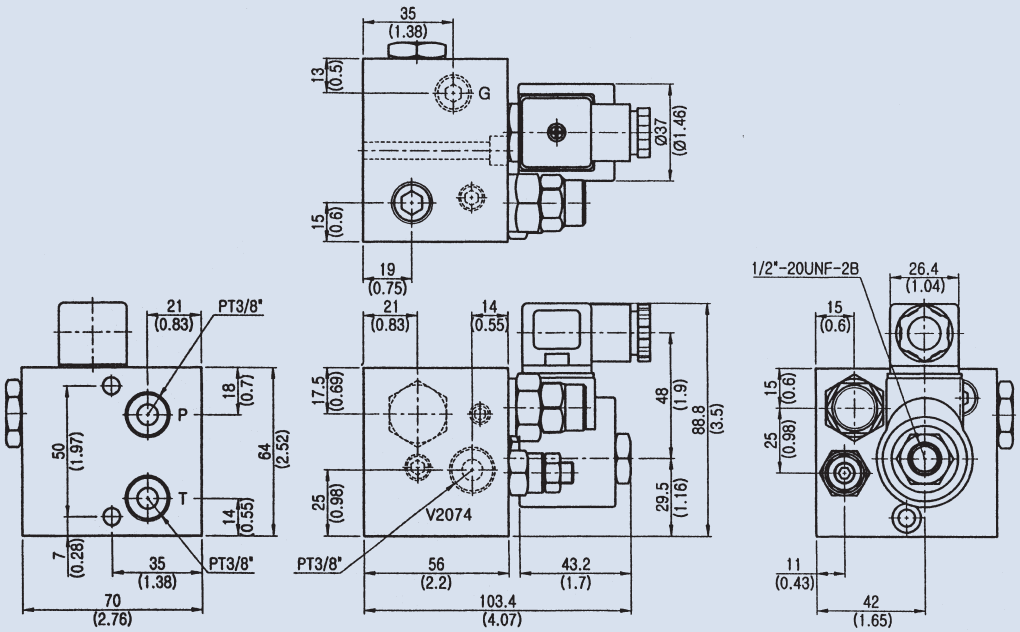

LIFT VALVE

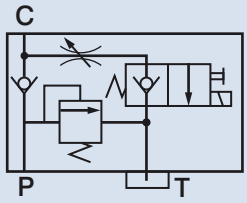

C

How to order

HV3074 - T 04 - NC - ※ - A22

1 2 3 4 5 6

1	Model Aluminum alloy body
2	Thread connection type
3	Port size 04: PT 1/2"
4	NC: Normal closed NO: Normal open
5	None: General use OM: With manual actuator
6	Voltage A11: AC110V (50/60HZ) A22: AC220V (50/60HZ) D1: DC12V D2: DC24V

Specifications

Model	Max. Operating Pressure (bar)	Max. Flow (lpm)	Rated Flow (lpm)	Weight (kg)
HV3074	250	50	45	1.6

Dimensions

Unit: mm
(inch)

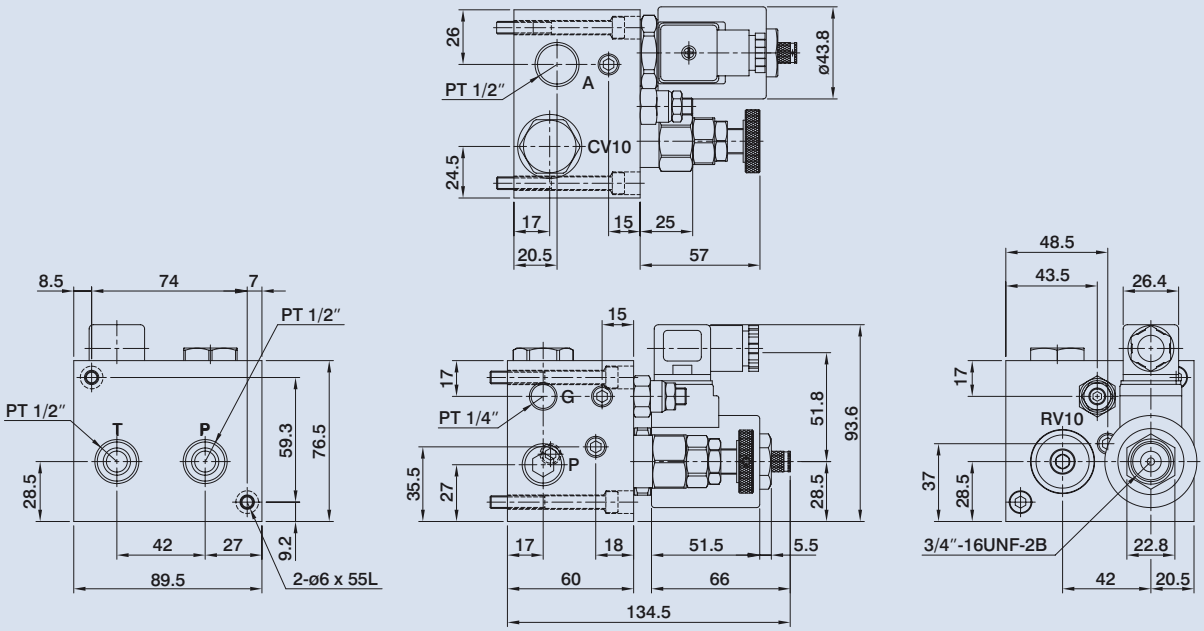

LIFT VALVE

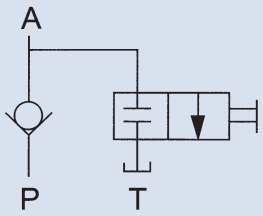

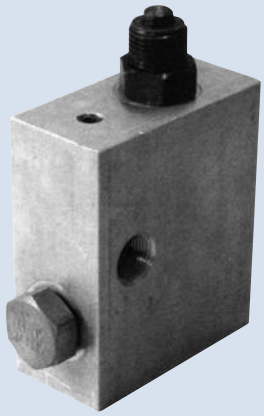

C

How to order

VLT - 03
1 2

1	Model	Manual actuating
2	Port size	03: 3/8"

Specifications

Model	Max. Operating Pressure (bar)	Max. Flow (lpm)	Rated Flow (lpm)	Weight (kg)
VLT-03	250	20	15	1

Dimensions

Unit: mm
(inch)

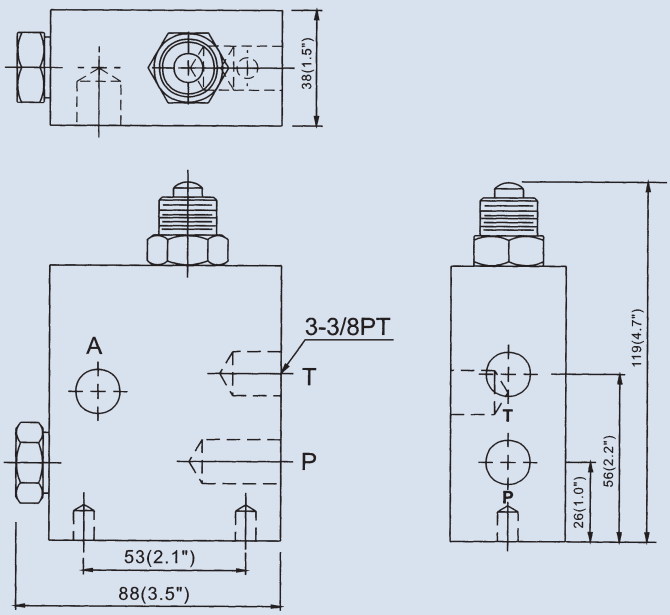

HOSE BURST PROTECTION VALVE

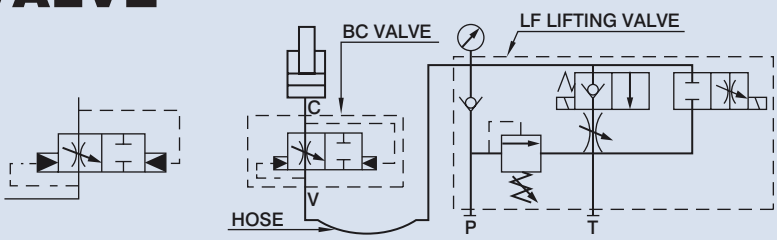

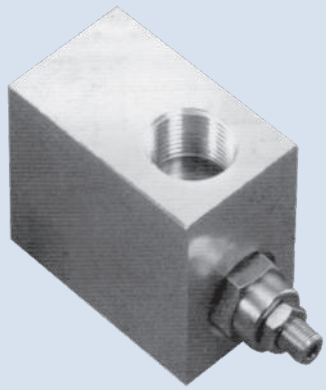

FUNCTION:

Under normal operation conditions, this valve is normally open. When the system flow going through this valve has a sudden increase over the preset flow velocity level due to system failure, hose burst, or over-load, this valve will shut off automatically to provide safety for operators.

FEATURES:

- The desired flow rate is adjustable and can be preset.
- Compact design provides ease for installation. If C port is mounted directly to T cylinder, the result is even better.

Specifications

Model	A	B	C	D	E	F	G	H	I	J	Max. Operating Pressure (bar)	Max. Flow (lpm)	Weight (kg)
VF-30	38	25	13	36	15	51	25	4	25	PT3/8"	210	30	0.15
VF-80	50	33	17	46	17	63	31	4	32	PT1/2"	210	60	0.31
VF-120	63	42	21	52	20	72	30	4	44	PT3/4"	210	90	0.53
VF-160	50.8	25.4	25.4	53.5	29	82.5	25	6	50.8	PT1"	210	250	0.75

Dimensions

Unit: mm

VF-30, 80, 120

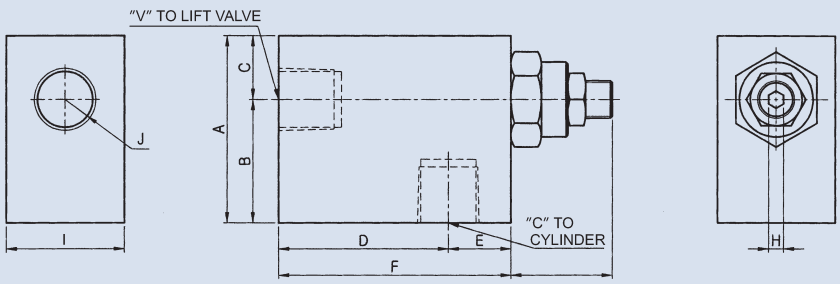

VF-160

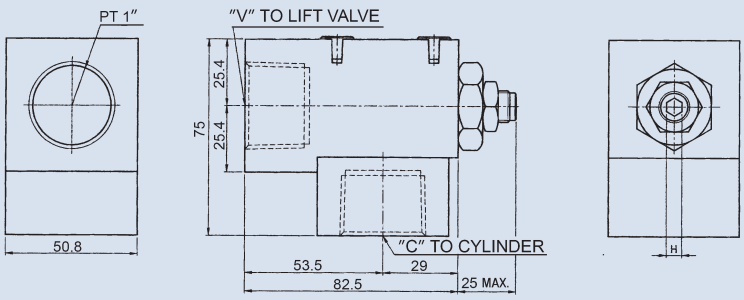

HOSE BURST PROTECTION VALVE

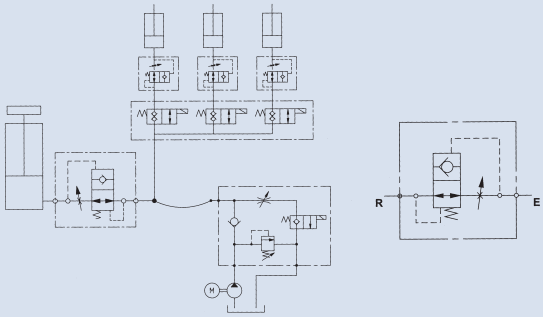

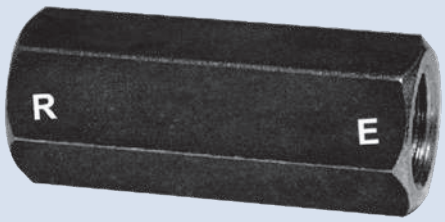

C

Specifications

Model	Popt Size	Max. Pressure (bar)	Max. Flow (lpm)	Weight (kg)
VAS-02	G 1/4"	350	25	0.12
VAS-03	G 3/8"		50	0.15
VAS-04	G 1/2"		80	0.23
VAS-06	G 3/4"		150	0.36
VAS-08	G 1"		220	1.05

Dimensions / Performance curves

Unit: mm
(inch)

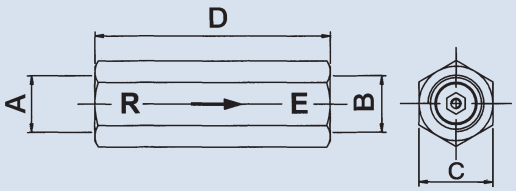

Model	A	B	C	D
VAS-02	G 1/4"	G 1/4"	19 (0.75")	66 (2.6")
VAS-03	G 3/8"	G 3/8"	22 (0.86")	70 (2.76")
VAS-04	G 1/2"	G 1/2"	27 (1.06")	80 (3.15")
VAS-06	G 3/4"	G 3/4"	32 (1.26")	100 (3.94")
VAS-08	G 1"	G 1"	46 (1.81")	115 (4.53")

VAS-02

Pressure Drop (bar) R-E

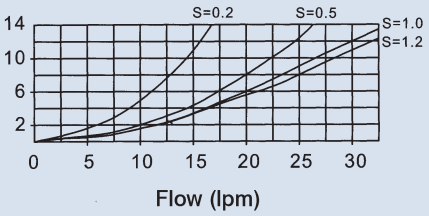

VAS-04

Pressure Drop (bar) R-E

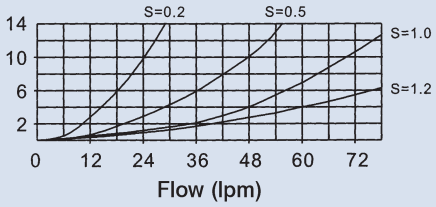

VAS-08

Pressure Drop (bar) R-E

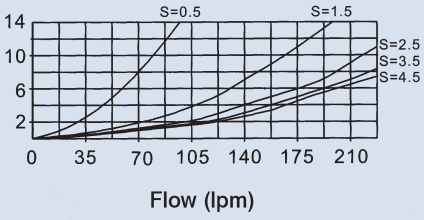

VAS-03

Pressure Drop (bar) R-E

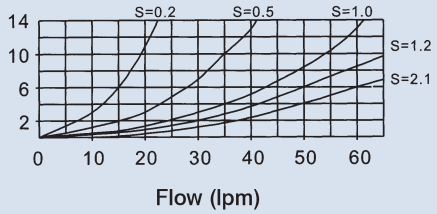

VAS-06

Pressure Drop (bar) R-E

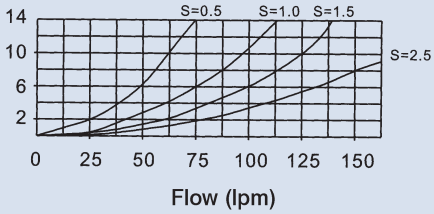

4ManPro
Elements For Manufacturing Processes

HI HYDROME

VALVULAS MODULARES (MODULAR VALVE)

MODULAR RELIEF VALVE

FEATURES:

- Back pressure in tank port should be as low as possible. (under 5 bar)
- In case the valves are used as safety valves, pressure setting should be higher than max. circuit pressure by 10~15 bar.

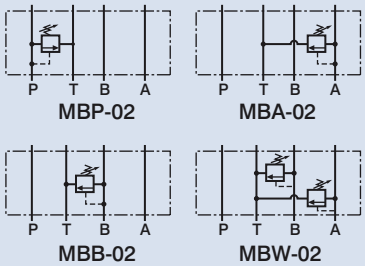

D

How to order

MB P - 02 - ※ - ※

1 2 3 4 5

1	Model
2	Control port P: P port A: A port B: B port W: A and B ports
3	Nominal valve size 02: 1/4" (ISO CETOP 3, NFPA D03, DIN NG 6)
4	Pressure adjusting range B: 7~70 bar C: 7~140 bar H: 10~230 bar
5	Adjustment option None: Tool adjustment K: Hand-bar adjustment

Specifications

Model	Max. Operating Pressure (bar)	Pressure Adj. Range (bar)	Max. Flow (lpm)	Weight (kg)
MBP-02	250	B: 7~70 C: 7~140 H: 10~230	35	1.4
MBA-02				1.4
MBB-02				1.4
MBW-02				2

Dimensions

MBP-02, MBA-02, MBB-02

Unit: mm

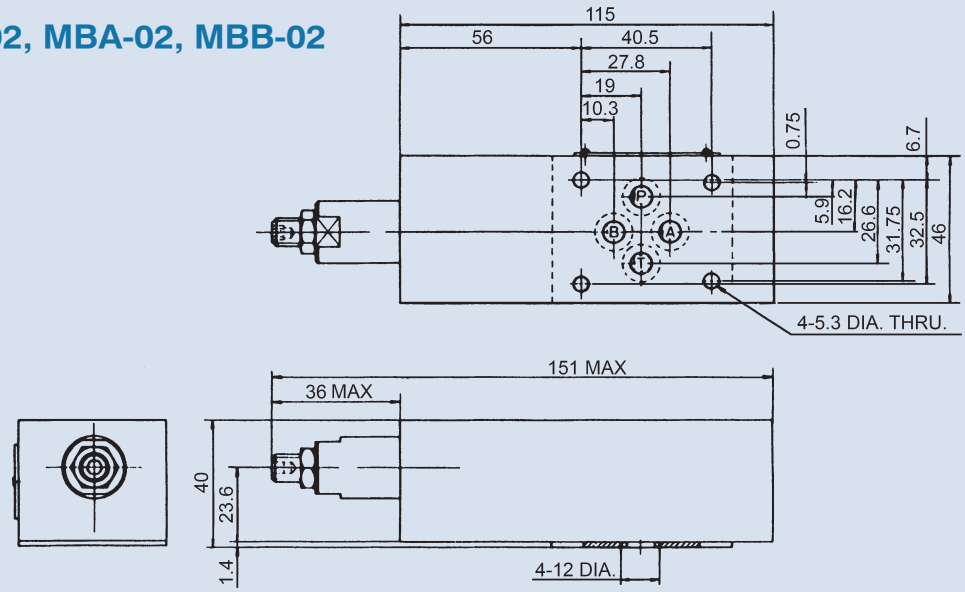

MODULAR BRAKE VALVE

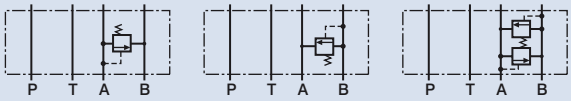

MRV-02-AD MRV-02-BD MRV-02-D

D

How to order

MRV - 02 - AD - ※ - ※

1 2 3 4 5

1	Model
2	Nominal valve size 02: 1/4" (ISO CETOP 3, NFPA D03, DIN NG 6)
3	Control port
4	Pressure adjusting range B: 10~70 bar H: 10~210 bar
5	Adjustment option None: Tool adjustment K: Hand-bar adjustment

Specifications

Model	Max. Operating Pressure (bar)	Pressure Adj. Range (bar)	Max. Flow (lpm)	Weight (kg)
MRV-02-AD	315	B: 10~70 H: 10~210	30	1.8
MRV-02-BD				1.8
MRV-02-D				2.0

Dimensions

MRV-02-AD

Unit: mm

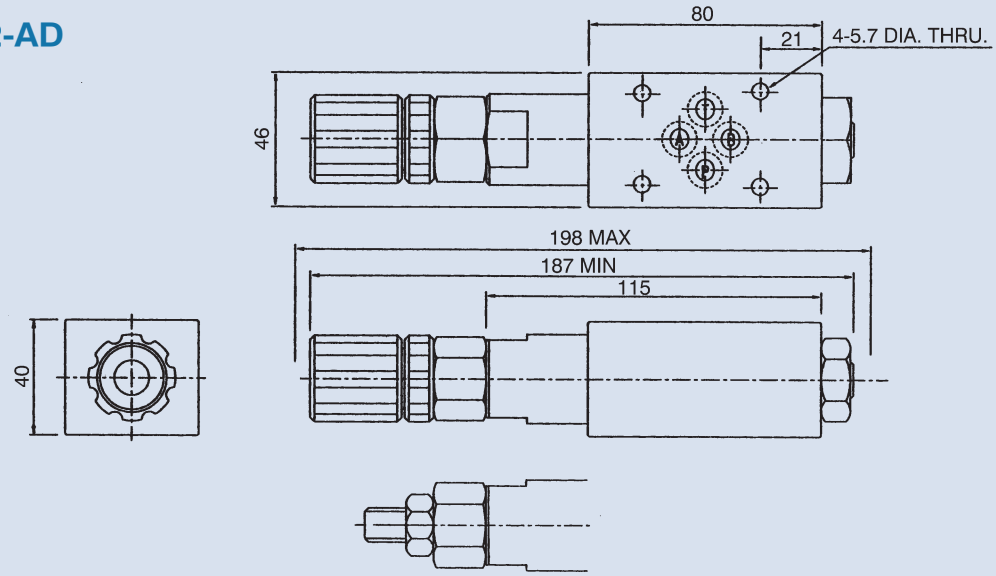

MODULAR PRESSURE REDUCING VALVE

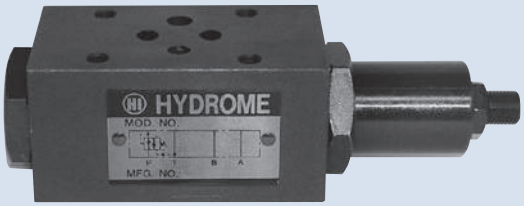

FEATURES:

- Drain port should be connected to tank.
- Pressure difference between primary pressure and secondary pressure should be maintained over 10 bar for good pressure reduction.
- Pressure cannot be adjusted if a certain flow rate cannot be obtained.

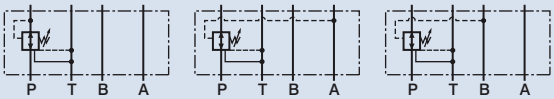

MRP-02 MRA-02 MRB-02

D

How to order

MR P - 02 - ※ - ※

1 2 3 4 5

1	Model
2	Control port P: P port A: A port B: B port
3	Nominal valve size 02: 1/4" (ISO CETOP 3, NFPA D03, DIN NG 6)
4	Pressure adjustment range S: 3~35 bar B: 7~70 bar C: 35~140 bar
5	Adjustment option None: Tool adjustment K: Hand-bar adjustment

Specifications

Model	Max. Operating Pressure (bar)	Pressure Adj. Range (bar)	Max. Flow (lpm)	Weight (kg)
MRP-02	210	S: 3~35	35	1.1
MRA-02		B: 7~70		1.1
MRB-02		C: 35~140		1.1

Dimensions

MRB-02

Unit: mm

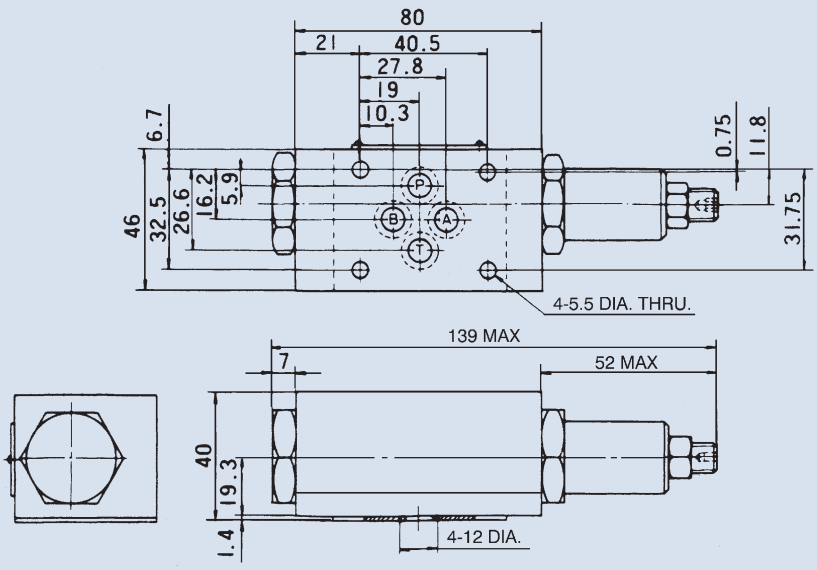

MODULAR SEQUENCE VALVE

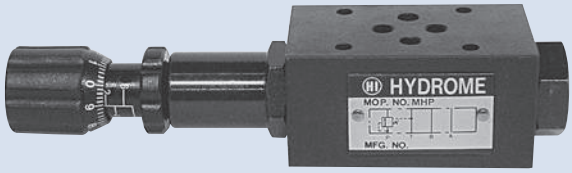

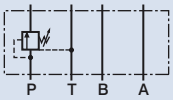

MHP-02

D

How to order

MH P - 02 - ※ - ※

1 2 3 4 5

1	Model
2	Control port P: P port
3	Nominal valve size 02: 1/4" (ISO CETOP 3, NFPA D03, DIN NG 6)
4	Pressure adjusting range C: 8~140 bar H: 10~210 bar
5	Adjustment option None: Tool adjustment K: Hand-bar adjustment

Specifications

Model	Max. Operating Pressure (bar)	Pressure Adj. Range (bar)	Max. Flow (lpm)	Weight (kg)
MHP-02	230	C: 8~140 H: 10~210	40	1.2

Dimensions

MHP-02

Unit: mm

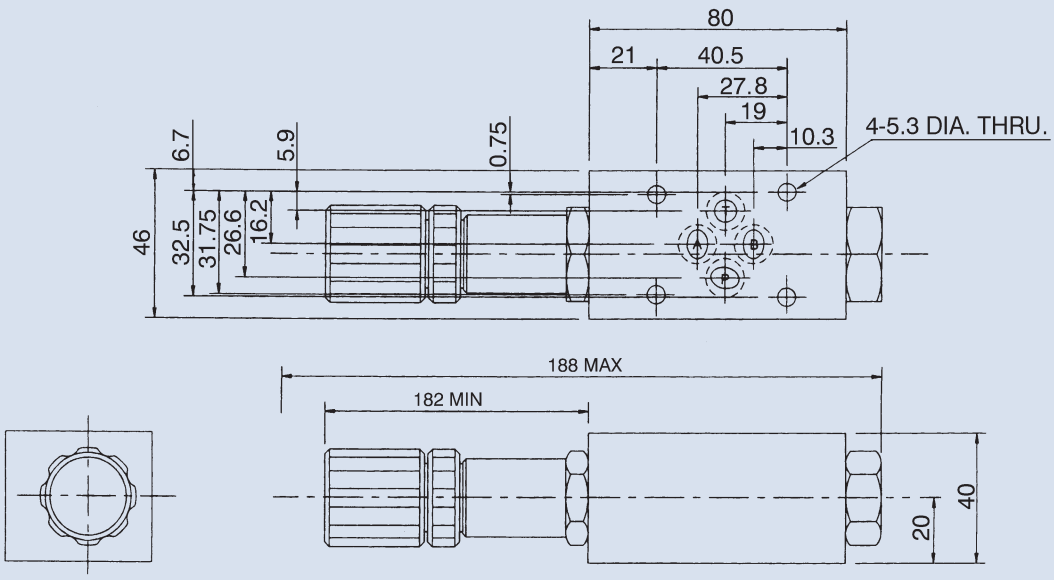

MODULAR COUNTERBALANCE VALVE

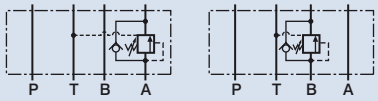

MHA-02 MHB-02

D

How to order

MH A - 02 - ※ - ※

1 2 3 4 5

1	Model
2	Control port A: A port B: B port
3	Nominal valve size 02: 1/4" (ISO CETOP 3, NFPA D03, DIN NG 6)
4	Pressure adjusting range C: 7~140 bar H: 10~210 bar
5	Adjustment option None: Tool adjustment K: Hand-bar adjustment

Specifications

Model	Max. Operating Pressure (bar)	Pressure Adj. Range (bar)	Max. Flow (lpm)	Weight (kg)
MHA-02	230	C: 7~140 H: 10~210	40	1.4
MHB-02				1.4

Dimensions

MHB-02

Unit: mm

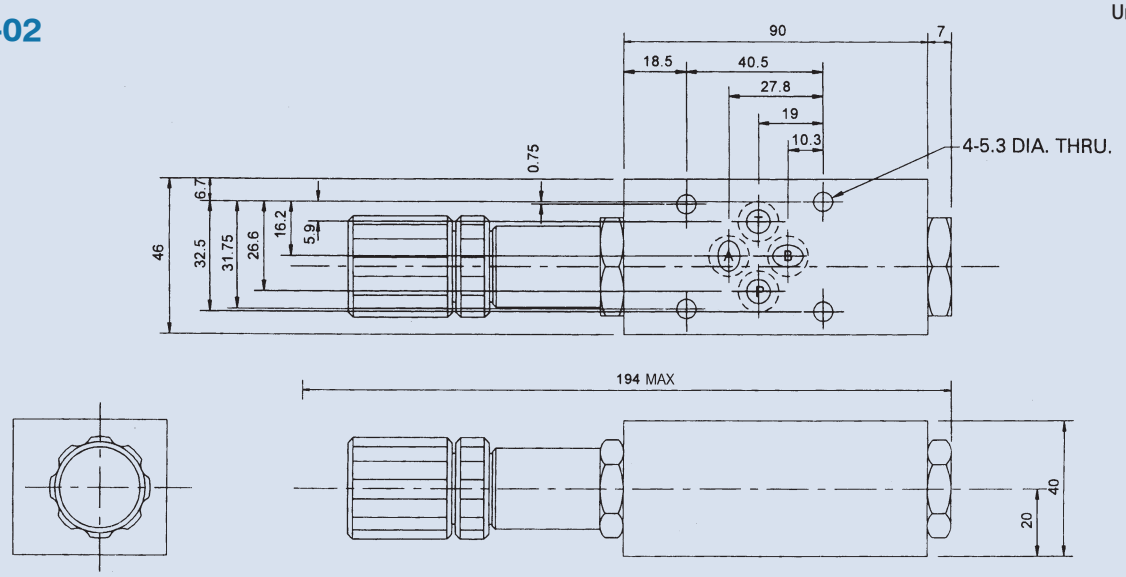

MODULAR PILOT OPERATED CHECK VALVE

FEATURES:

- Area ratio: 2.5:1
- Cracking pressure of check valve is 2 bar.
- The valve is the internal drain type.

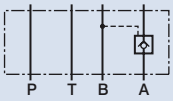

MPA-02

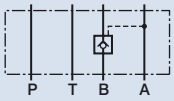

MPB-02

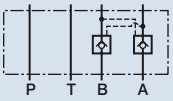

MPW-02

D

How to order

MP W - 02

1 2 3

1	Model
2	Control port A: A port B: B port W: A and B ports
3	Nominal valve size 02: 1/4" (ISO CETOP 3, NFPA D03, DIN NG 6)

Specifications

Model	Max. Operating Pressure (bar)	Cracking Pressure (bar)	Max. Flow (lpm)	Weight (kg)
MPA-02	280	2: 2 4: 4	35	1.0
MPB-02				1.0
MPW-02				1.1

Dimensions

MPW-02

Unit: mm

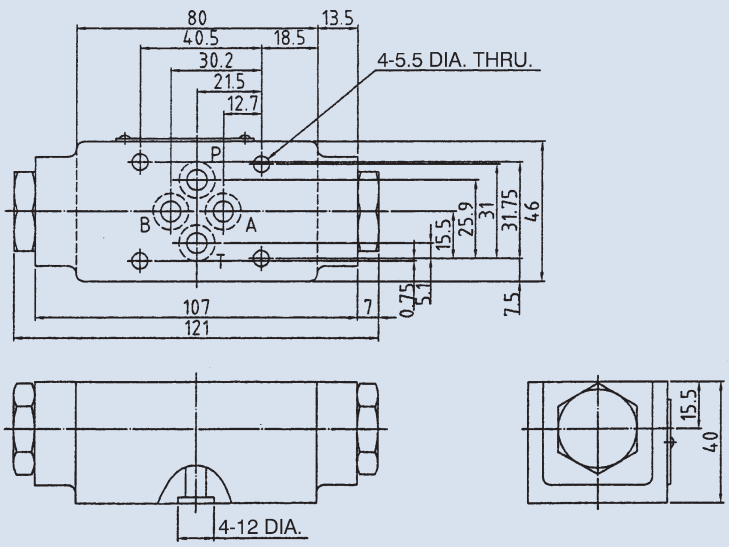

MODULAR CHECK VALVE

FEATURES:

- When the valve is installed upside down by means of the gasket plate, P port check type is changed to T port check type and T port check type to P port check type.

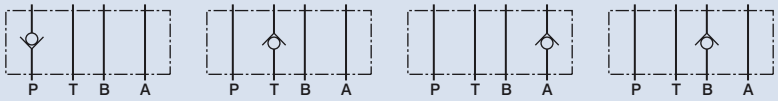

D

How to order

MC P - 02 - ※

1 2 3 4

1	Model
2	Control port P: P port T: T port A: A port B: B port
3	Nominal valve size 02: 1/4" (ISO CETOP 3, NFPA D03, DIN NG 6)
4	Cracking pressure 0: 0.35 bar 2: 2 bar

Specifications

Model	Max. Operating Pressure (bar)	Cracking Pressure (bar)	Max. Flow (lpm)	Weight (kg)
MCP-02	280	0: 0.35 2: 2	35	0.9
MCT-02				0.9
MCA-02				1.0
MCB-02				1.0

Dimensions

MCP-02, MCT-02

Unit: mm

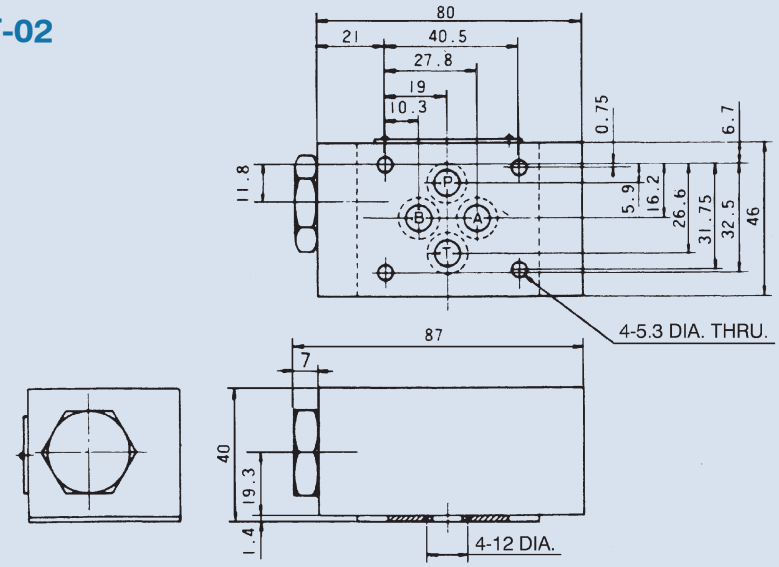

MODULAR THROTTLE VALVE

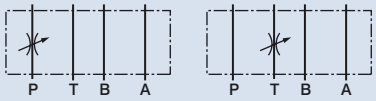

MSP-02 MST-02

D

How to order

MS P - 02 - ※

1 2 3 4

1	Model
2	Control port P: P port T: T port
3	Nominal valve size 02: 1/4" (ISO CETOP 3, NFPA D03, DIN NG 6)
4	Adjustment option None: Tool adjustment K: Hand-bar adjustment

Specifications

Model	Max. Operating Pressure (bar)	Flow Adj. Range (lpm)	Max. Flow (lpm)	Weight (kg)
MSP-02	280	0.3~25	50	1.2
MST-02				1.2

Dimensions

Unit: mm

MSP-02

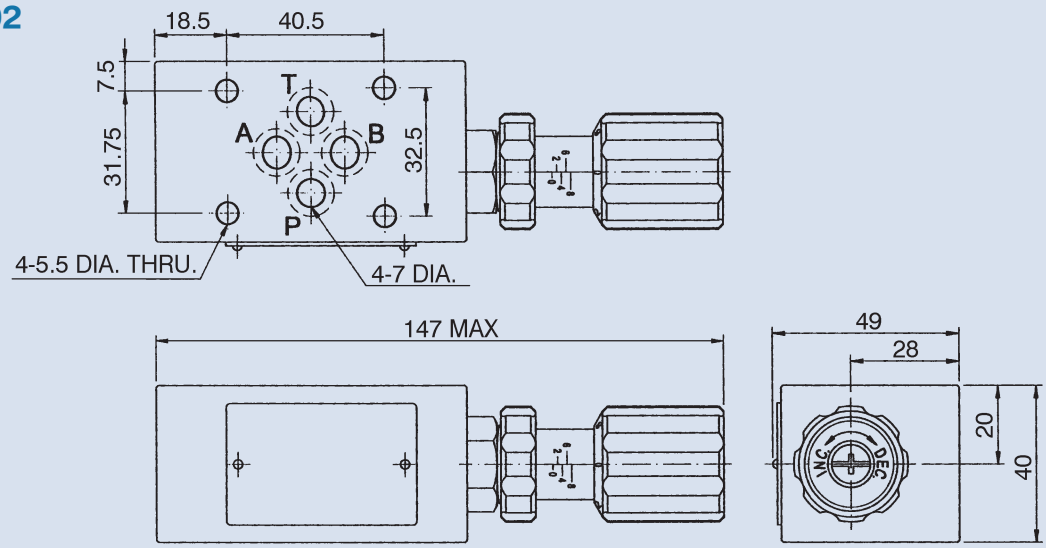

MODULAR THROTTLE AND CHECK VALVE

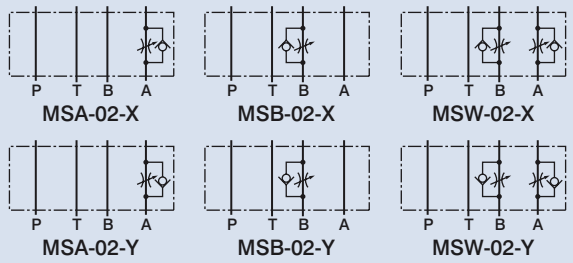

D

How to order

MS W - 02 - ※ - ※

1 2 3 4 5

1	Model
2	Control port A: A port B: B port W: A and B ports
3	Nominal valve size 02: 1/4" (ISO CETOP 3, NFPA D03, DIN NG 6)
4	Control type X: Meter-out Y: Meter-in
5	Adjustment option None: Tool adjustment K: Hand-bar adjustment

Specifications

Model	Max. Operating Pressure (bar)	Flow Adj. Range (lpm)	Max. Flow (lpm)	Weight (kg)
MSA-02	280	0.3~25	50	1.1
MSB-02				1.1
MSW-02				1.3

Dimensions

MSW-02

Unit: mm

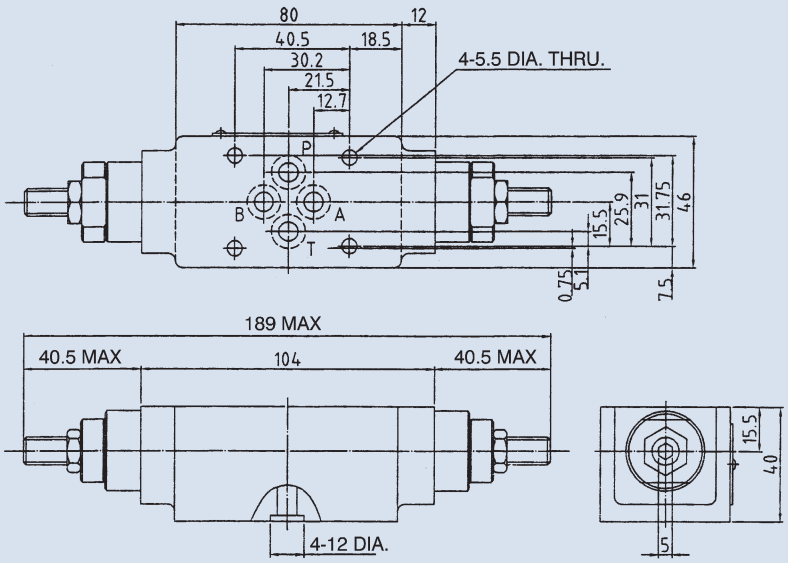

MODULAR PRESSURE AND TEMPERATURE COMPENSATED FLOW CONTROL VALVE

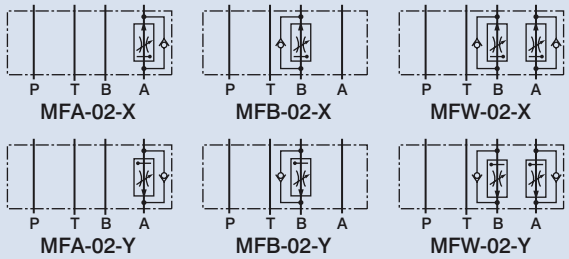

D

How to order

MF W - 02 - ※

1 2 3 4

1	Model
2	Control port A: A port B: B port W: A and B ports
3	Nominal valve size 02: 1/4" (ISO CETOP 3, NFPA D03, DIN NG 6)
4	Control type X: Meter-out Y: Meter-in

Specifications

Model	Max. Operating Pressure (bar)	Max. Flow (lpm)	Weight (kg)
MFA-02	210	35	2.0
MFB-02			2.0
MFW-02			2.2

Dimensions

MFW-02

Unit: mm

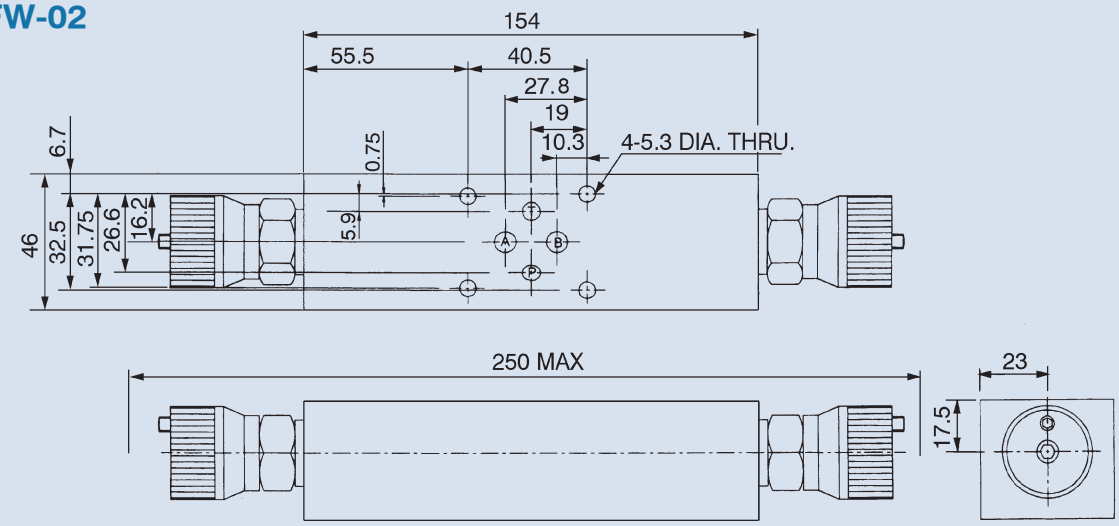

MODULAR RELIEF VALVE

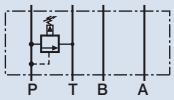

MBP-03

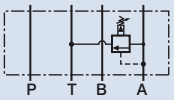

MBA-03

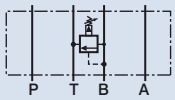

MBB-03

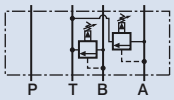

MBW-03

D

How to order

MB P - 03 - ※ - ※

1 2 3 4 5

1	Model
2	Control port P: P port A: A port B: B port W: A and B ports
3	Nominal valve size 03: 3/8" (ISO CETOP 5, NFPA D05, DIN NG 10)
4	Pressure adjusting range B: 7~70 bar H: 10~230 bar
5	Adjustment option None: Tool adjustment K: Hand-bar adjustment

Specifications

Model	Max. Operating Pressure (bar)	Pressure Adj. Range (bar)	Max. Flow (lpm)	Weight (kg)
MBP-03	250	B: 7~70 H: 10~230	70	3.5
MBA-03				3.5
MBB-03				3.5
MBW-03				4.3

Dimensions

Unit: mm

MBW-03

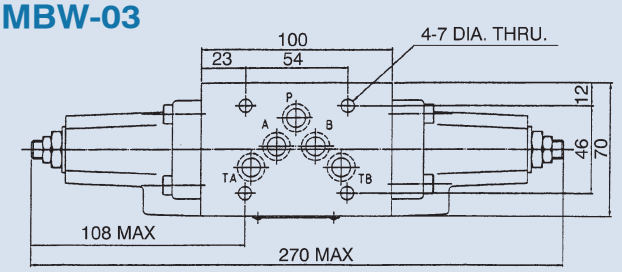

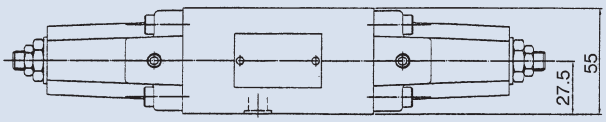

MBA(B)-03

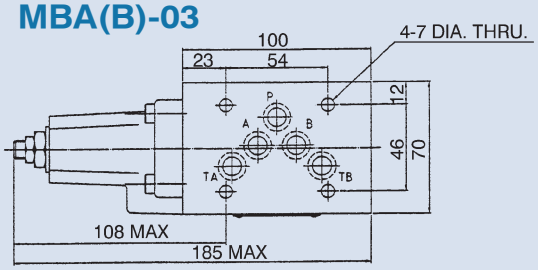

MBP-03

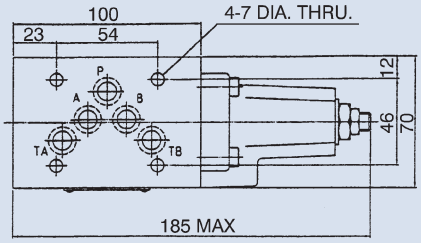

MODULAR PRESSURE REDUCING VALVE

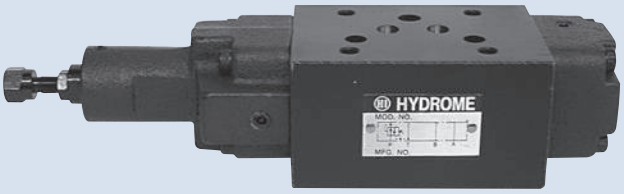

FEATURES:

- Drain port should be connected to tank.
- Pressure difference between primary pressure and secondary pressure should be maintained over 10 bar for good pressure reduction.

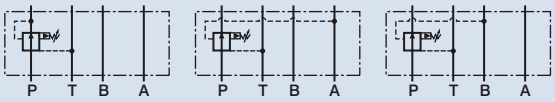

MRP-03 MRA-03 MRB-03

D

How to order

MR P - 03 - ※ - ※

1 2 3 4 5

1	Model
2	Control port P: P port A: A port B: B port
3	Nominal valve size 03: 3/8" (ISO CETOP 5, NFPA D05, DIN NG 10)
4	Pressure adjusting range S: 3~35 bar B: 7~70 bar C: 35~140 bar
5	Adjustment option None: Tool adjustment K: Hand-bar adjustment

Specifications

Model	Max. Operating Pressure (bar)	Pressure Adj. Range (bar)	Max. Flow (lpm)	Weight (kg)
MRP-03	210	S: 3~35	70	4.0
MRA-03		B: 7~70		4.0
MRB-03		C: 35~140		4.0

Dimensions

MRP(B)-03

Unit: mm

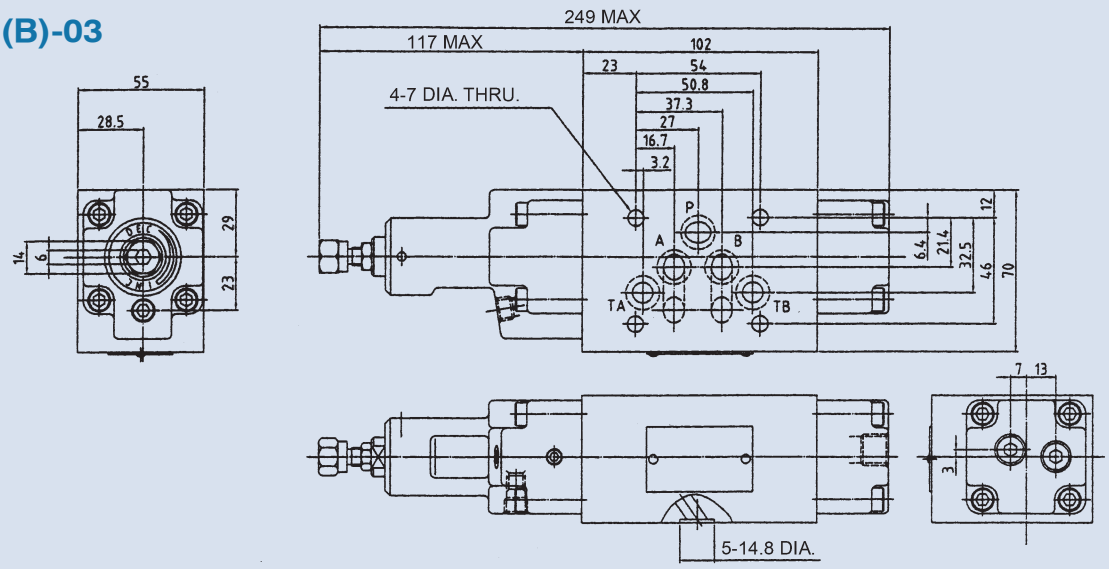

MODULAR SEQUENCE VALVE

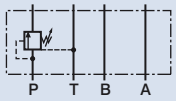

MHP-03

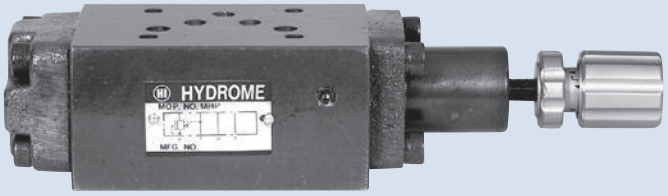

D

How to order

MHP - 03 - ※ - ※

1 2 3 4

1	Model
2	Nominal valve size 03: 3/8" (ISO CETOP 5, NFPA D05, DIN NG 10)
3	Pressure adjusting range B: 10~70 bar H: 20~210 bar
4	Adjustment option None: Tool adjustment K: Hand-bar adjustment

Specifications

Model	Max. Operating Pressure (bar)	Pressure Adj. Range (bar)	Max. Flow (lpm)	Weight (kg)
MHP-03	230	B: 10~70 H: 20~210	80	4.2

Dimensions

MHP-03

Unit: mm

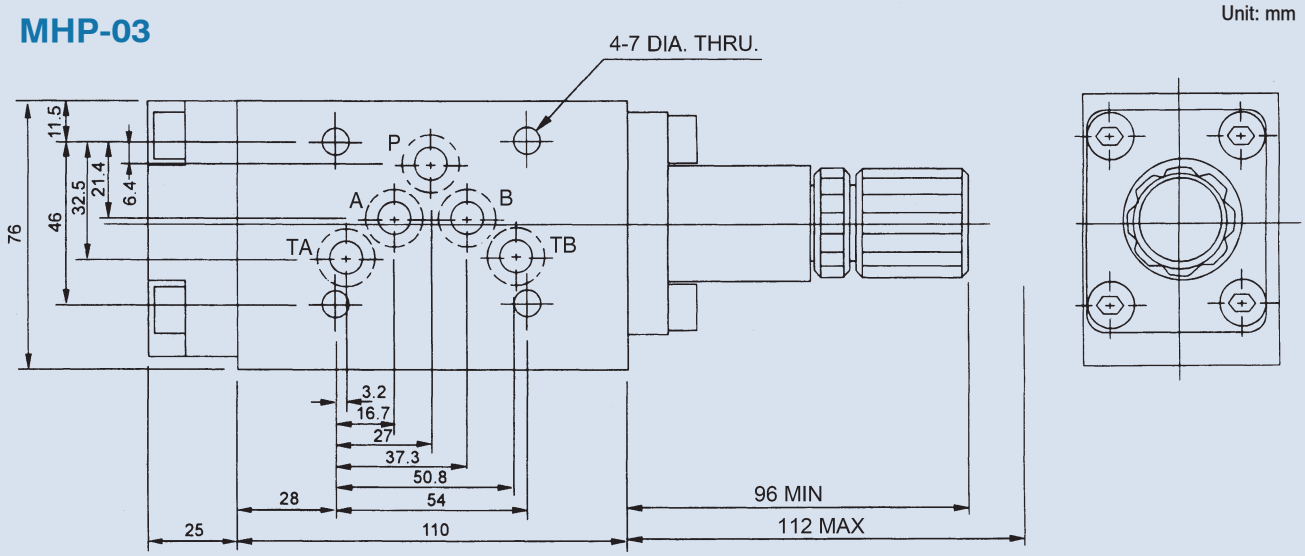

MODULAR COUNTERBALANCE VALVE

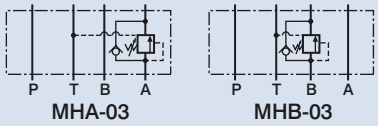

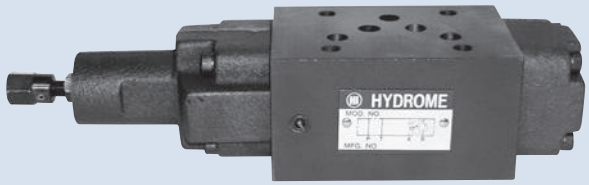

D

How to order

MH A - 03 - ※ - ※

1 2 3 4 5

1	Model
2	Control port A: A port B: B port
3	Nominal valve size 03: 3/8" (ISO CETOP 5, NFPA D05, DIN NG 10)
4	Pressure adjustment range B: 8~70 bar H: 20~210 bar
5	Adjustment option None: Tool adjustment K: Hand-bar adjustment

Specifications

Model	Max. Operating Pressure (bar)	Pressure Adj. Range (bar)	Max. Flow (lpm)	Weight (kg)
MHA-03	230	B: 8~70 H: 20~210	70	4.2
MHB-03				4.2

Dimensions

MHA-03

Unit: mm

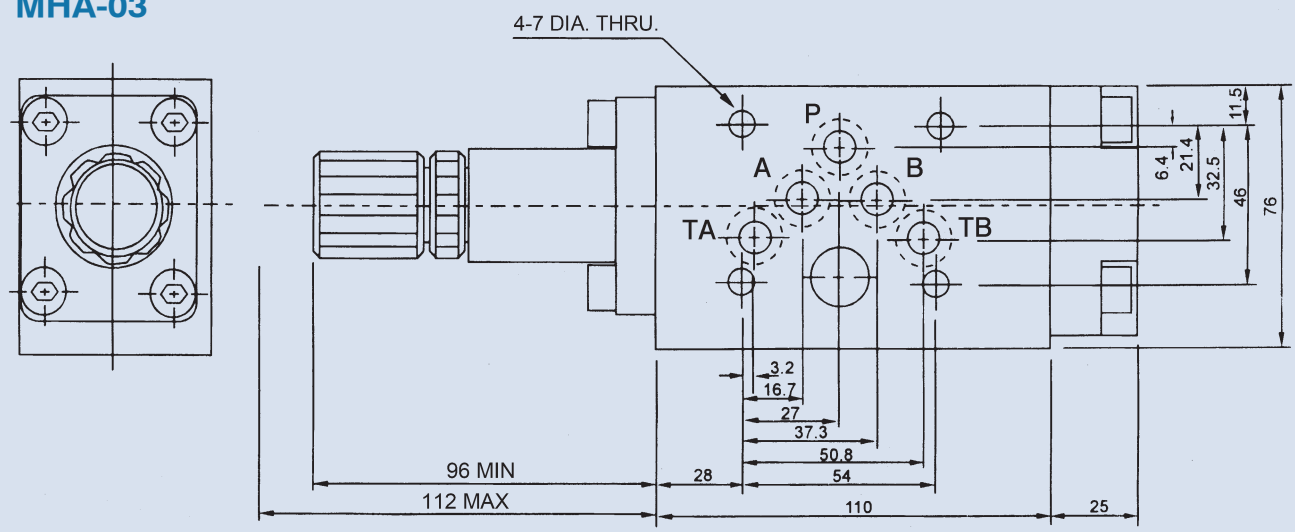

MODULAR PILOT OPERATED CHECK VALVE

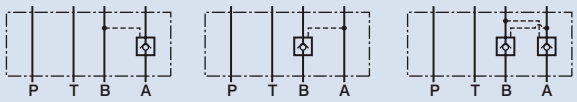

D

How to order

MP W - 03
1 2 3

1	Model
2	Control port A: A port B: B port W: A and B ports
3	Nominal valve size 03: 3/8" (ISO CETOP 5, NFPA D05, DIN NG 10)

Specifications

Model	Max. Operating Pressure (bar)	Cracking Pressure (bar)	Max. Flow (lpm)	Weight (kg)
MPA-03	250	2: 2 4: 4	70	3.0
MPB-03				3.0
MPW-03				3.2

Dimensions

MPW-03

Unit: mm

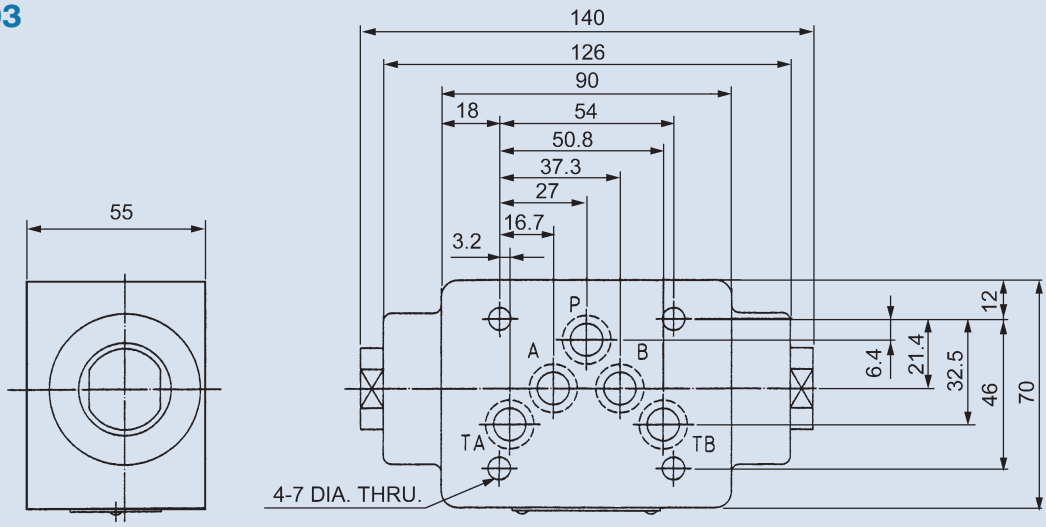

MODULAR CHECK VALVE

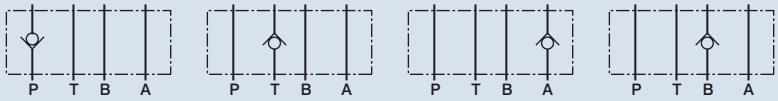

D

How to order

MC P - 03 - ※

1 2 3 4

1	Model
2	Control port P: P port T: T port A: A port B: B port
3	Nominal valve size 03: 3/8" (ISO CETOP 5, NFPA D05, DIN NG 10)
4	Cracking pressure 0: 0.35 bar 2: 2 bar

Specifications

Model	Max. Operating Pressure (bar)	Cracking Pressure (bar)	Max. Flow (lpm)	Weight (kg)
MCP-03	250	0: 0.35 2: 2	70	2.1
MCT-03				2.1
MCA-03				2.8
MCB-03				2.8

Dimensions

MCP-03

Unit: mm

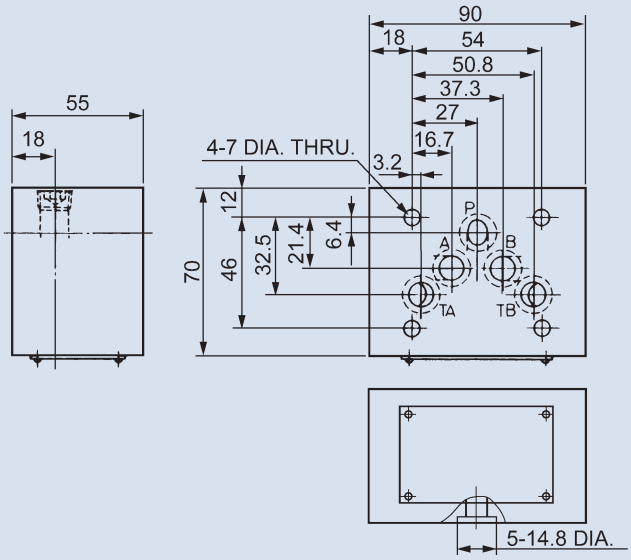

MODULAR THROTTLE VALVE

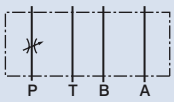

MSP-03

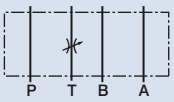

MST-03

D

How to order

MS P - 03 - ※

1 2 3 4

1	Model
2	Control port P: P port T: T port
3	Nominal valve size 03: 3/8" (ISO CETOP 5, NFPA D05, DIN NG 10)
4	Adjustment option None: Tool adjustment K: Hand-bar adjustment

Specifications

Model	Max. Operating Pressure (bar)	Flow Adj. Range (lpm)	Max. Flow (lpm)	Weight (kg)
MSP-03	250	0.5~60	70	2.5
MST-03				2.5

Dimensions

MSP-03

Unit: mm

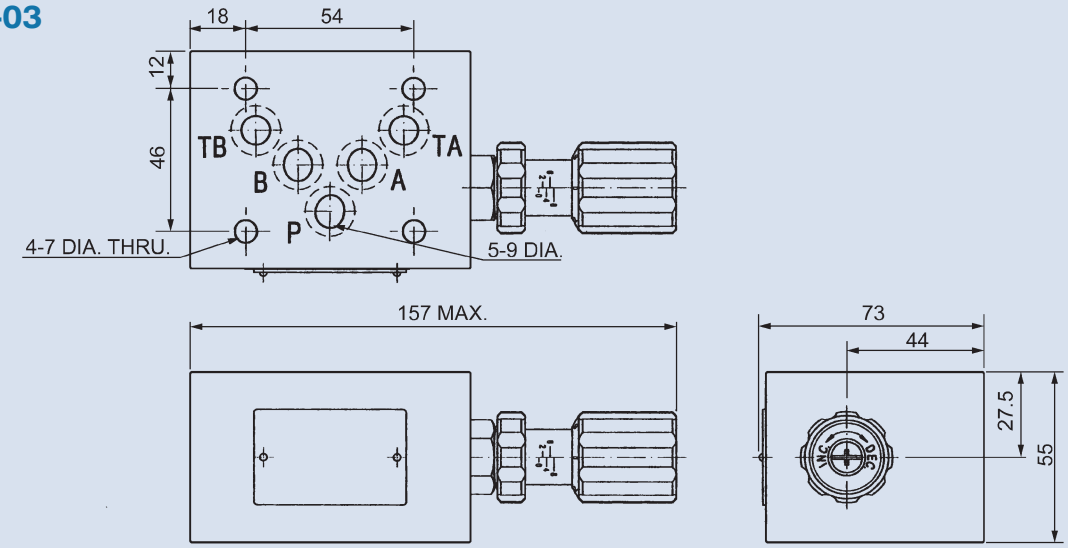

MODULAR THROTTLE AND CHECK VALVE

FEATURES:

- Clockwise rotation of the adjusting screw reduces flow rate and counterclockwise rotation increases it.
- Since the valve is of the spool type, oil flow cannot be shut off completely.

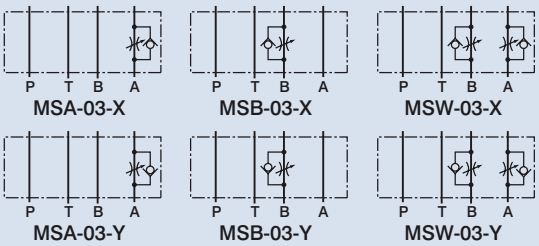

D

How to order

MS W - 03 - ※ - ※

1 2 3 4 5

1	Model
2	Control port A: A port B: B port W: A and B ports
3	Nominal valve size 03: 3/8" (ISO CETOP 5, NFPA D05, DIN NG 10)
4	Control type X: Meter-out Y: Meter-in
5	Adjustment option None: Tool adjustment K: Hand-bar adjustment

Specifications

Model	Max. Operating Pressure (bar)	Flow Adj. Range (lpm)	Max. Flow (lpm)	Weight (kg)
MSA-03	250	0.5~60	70	2.3
MSB-03				2.3
MSW-03				3.1

Dimensions

MSA-03

Unit: mm

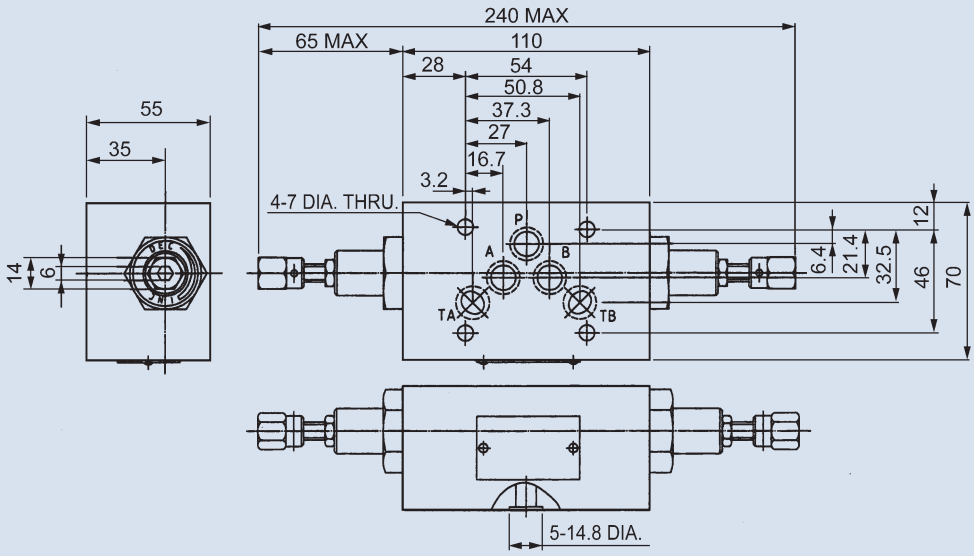

MODULAR PRESSURE AND TEMPERATURE COMPENSATED FLOW CONTROL VALVE

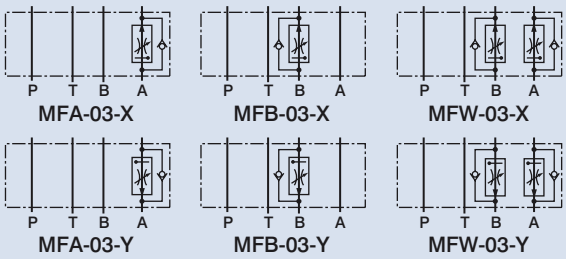

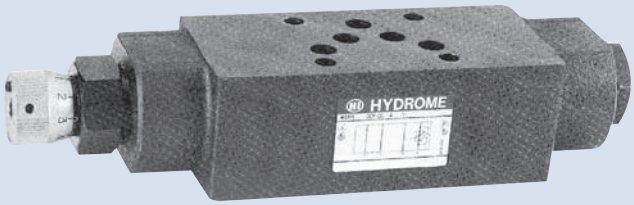

D

How to order

MF W - 03 - ※

1 2 3 4

1	Model
2	Control port A: A port B: B port W: A and B ports
3	Nominal valve size 03: 3/8" (ISO CETOP 5, NFPA D05, DIN NG 10)
4	Control type X: Meter-out Y: Meter-in

Specifications

Model	Max. Operating Pressure (bar)	Max. Flow (lpm)	Weight (kg)
MFA-03	210	80	5.0
MFB-03			5.0
MFW-03			5.5

Dimensions

Unit: mm

MFA-03

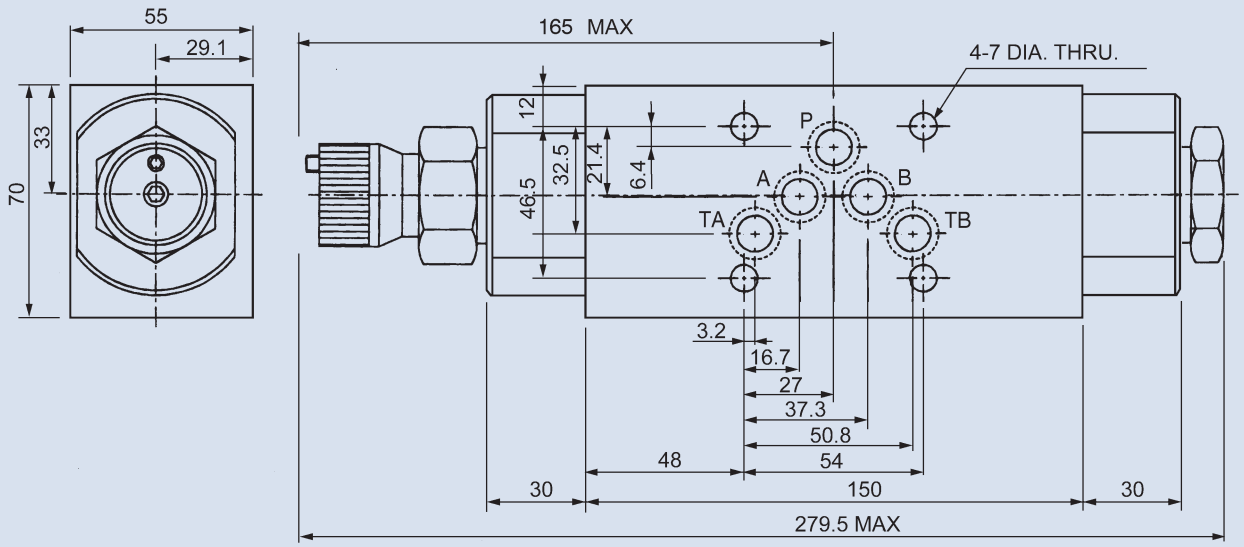

PERFORMANCE CURVES FOR MODULAR VALVES-MBP(A,B)-02, MRP(A,B)-02, MHA(B)-02

D

Performance curves

Test fluid viscosity: 35 cst
Test temperature: 50 ˚C

MBP(A,B)-02

MIN. PRESSURE ADJ.

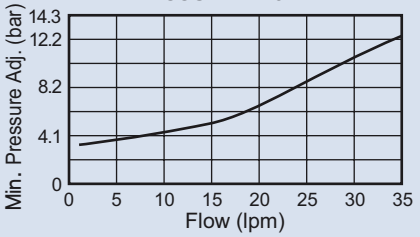

PRESSURE DROP

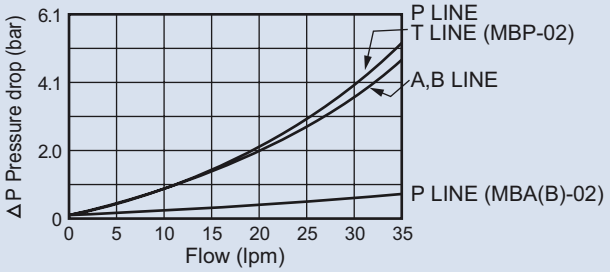

NOMINAL OVERRIDE

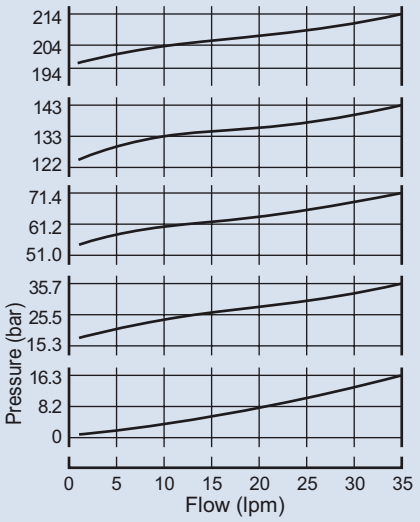

MRP(A,B)-02

PRESSURE DROP

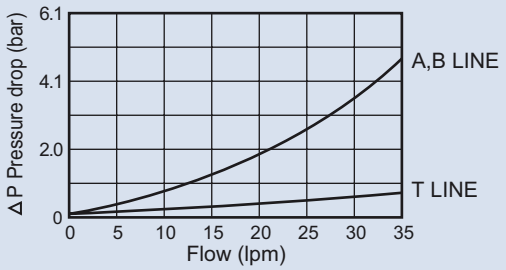

PRESSURE DROP AT SPOOL FULLY OPENED

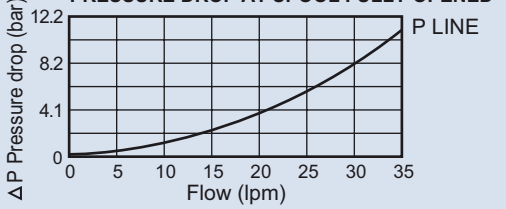

MIN. PRESSURE ADJ. V.S MAX. FLOW

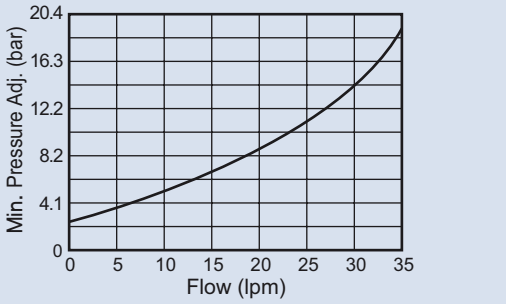

MHA(B)-02

PRESSURE DROP FOR FREE FLOW

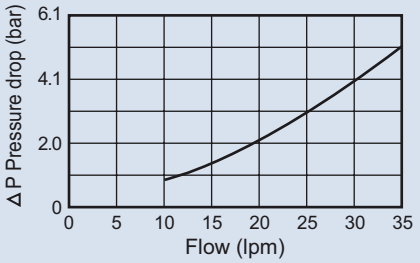

PRESSURE DROP

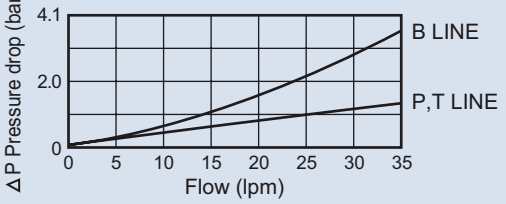

PERFORMANCE CURVES FOR MODULAR VALVES-MSW(A,B)-02, MPW(A,B)-02, MCP(T,A,B)-02

Performance curves

Test fluid viscosity: 35 cst
Test temperature: 50 ˚C

MSW(A,B)-02

PRESSURE DROP

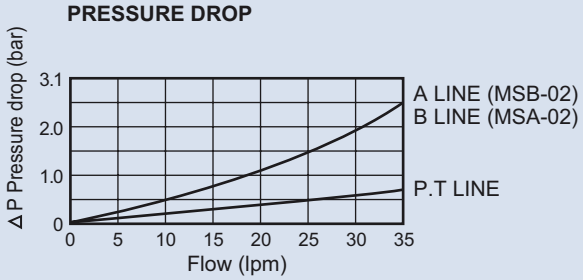

PRESSURE DROP FOR FREE FLOW

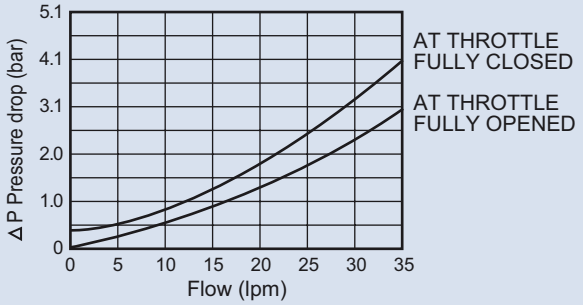

PRESSURE DROP AT THROTTLE FULLY OPENED

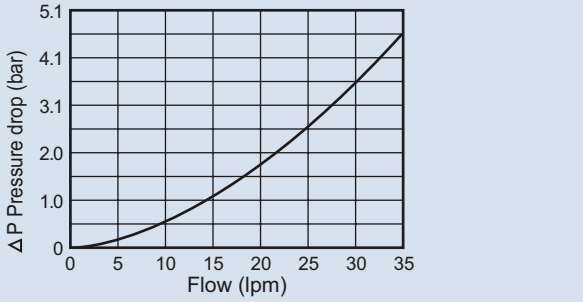

MPW(A,B)-02

PRESSURE DROP FOR REVERSE CONTROLLED FLOW

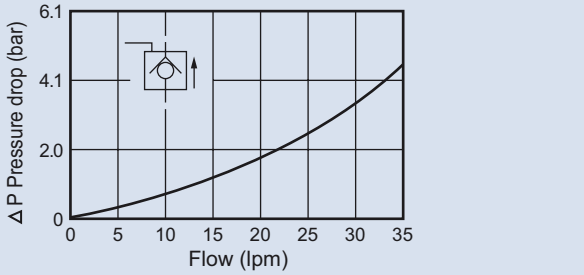

PRESSURE DROP

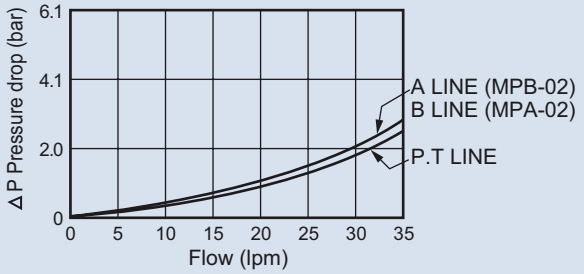

MIN. PILOT PRESSURE

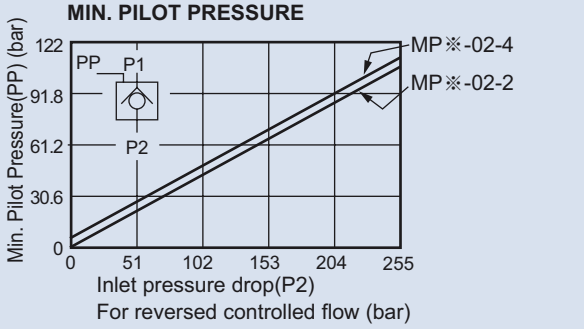

MCP(T,A,B)-02

PRESSURE DROP FOR FREE FLOW

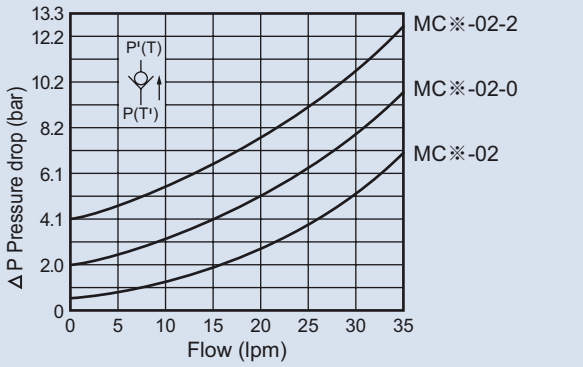

PRESSURE DROP

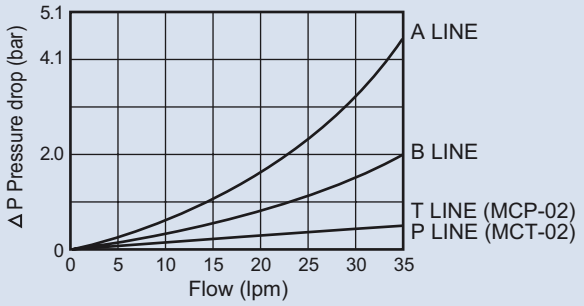

D

PERFORMANCE CURVES FOR MODULAR VALVES-MBP(A,B)-03, MRP(A,B)-03, MHA(B)-03

Performance curves

Test fluid viscosity: 35 cst
Test temperature: 50 ˚C

MBP(A,B)-03

MIN. PRESSURE ADJ.

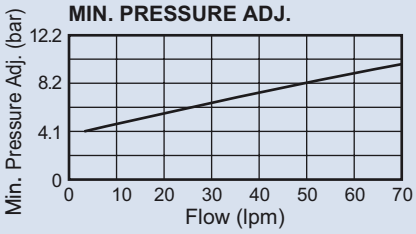

PRESSURE DROP

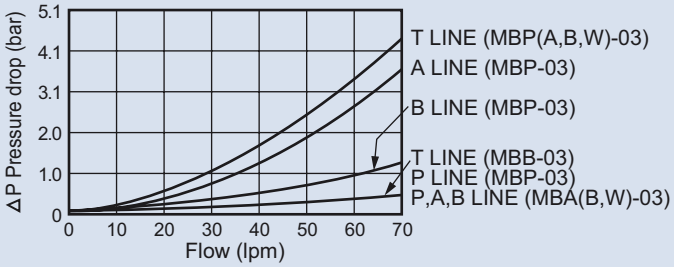

NOMINAL OVERRIDE

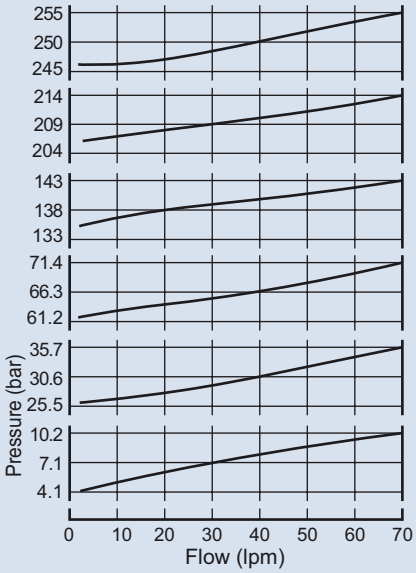

MRP(A,B)-03

PRESSURE DROP

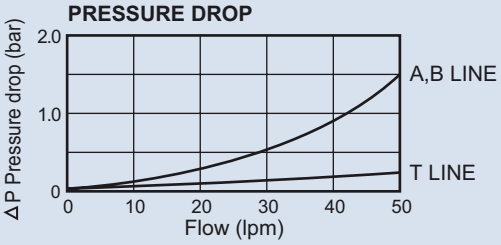

PRESSURE DROP AT SPOOL FULLY OPENED

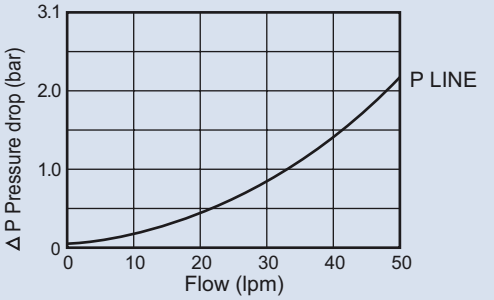

PILOT FLOW

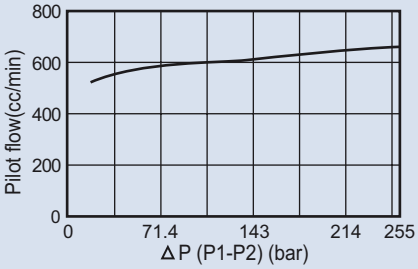

MHA(B)-03

PRESSURE DROP FOR FREE FLOW

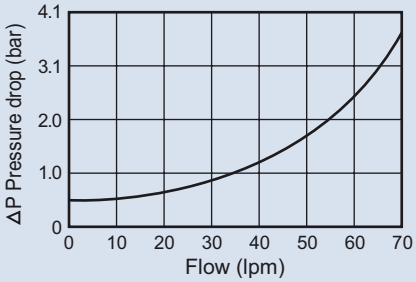

PRESSURE DROP

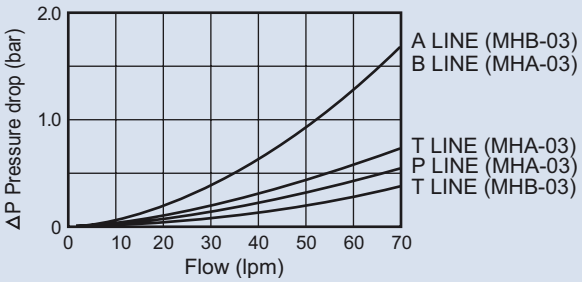

PERFORMANCE CURVES FOR MODULAR VALVES-MSW(A,B)-03, MPW(A,B)-03, MCP(T,A,B)-03

Performance curves

Test fluid viscosity: 35 cst
Test temperature: 50 ˚C

MSW(A,B)-03

PRESSURE DROP

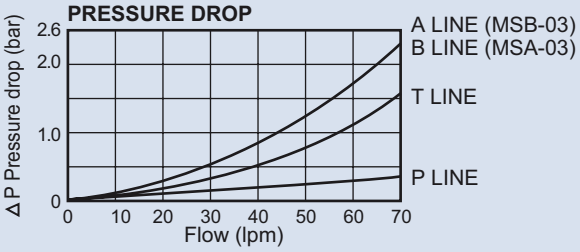

PRESSURE DROP FOR FREE FLOW

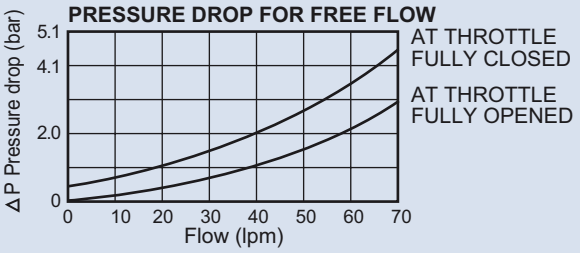

METERED FLOW V.S. DIAL POSITION

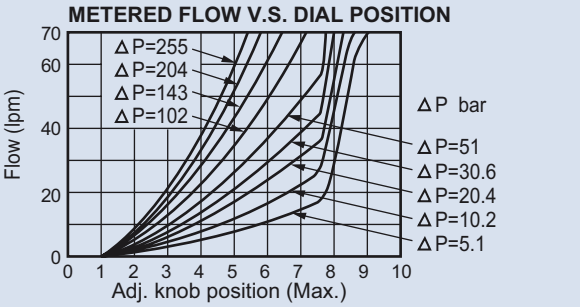

PRESSURE DROP AT THROTTLE FULLY OPENED

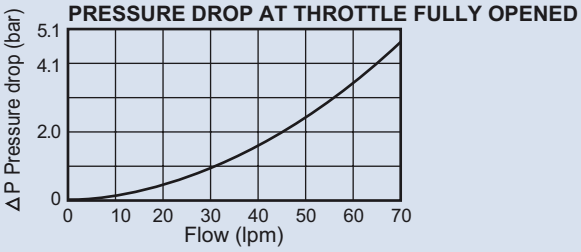

MPW(A,B)-03

PRESSURE DROP FOR REVERSE CONTROLLED FLOW

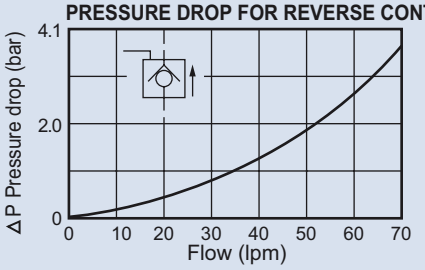

PRESSURE DROP

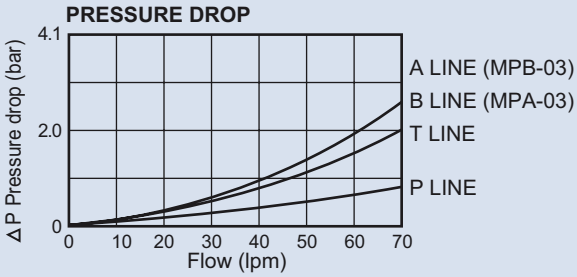

MIN PILOT PRESSURE

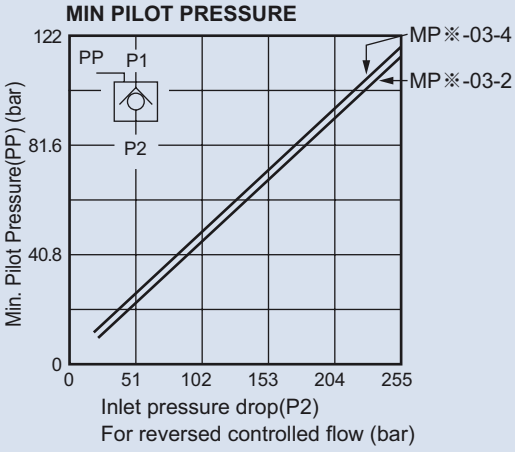

MCP(T,A,B)-03

PRESSURE DROP FOR FREE FLOW

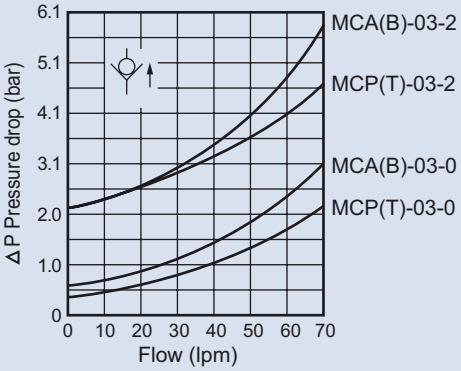

PRESSURE DROP

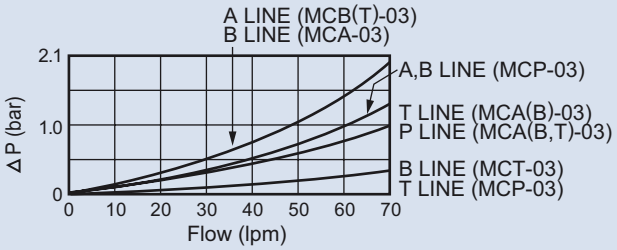

D

MODULAR RELIEF VALVE

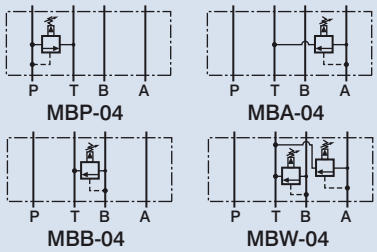

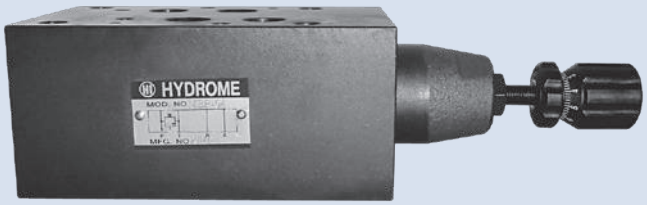

D

How to order

MB P - 04 - ※ - ※

1 2 3 4 5

1	Model
2	Control port P: P port A: A port B: B port W: A and B ports
3	Nominal valve size 04: 1/2" (ISO CETOP 7, NFPA D07, DIN NG 16)
4	Pressure adjusting range B: 3~100 bar H: 7~315 bar
5	Adjustment option None: Tool adjustment K: Hand-bar adjustment

Specifications

Model	Max. Operating Pressure (bar)	Pressure Adj. Range (bar)	Max. Flow (lpm)	Weight (kg)
MBP-04	315	B: 3~100 H: 7~315	200	6.0
MBA-04				6.0
MBB-04				6.0
MBW-04				7.0

Dimensions

MBP-04

Unit: mm
(inch)

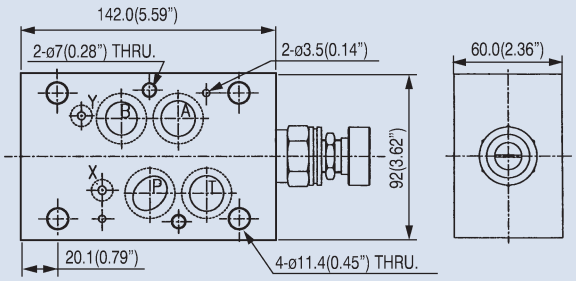

Mounting interface
ISO 4401-AD-07-4-A

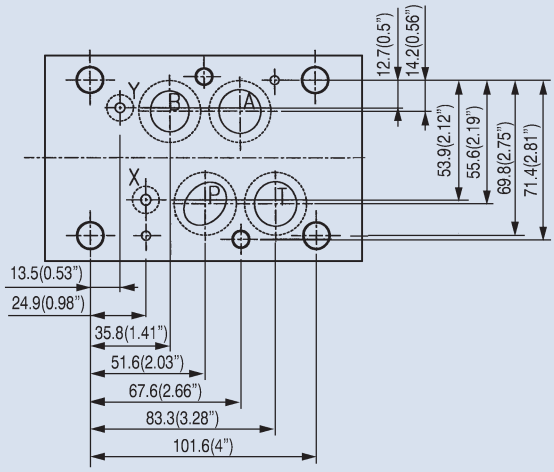

MODULAR PRESSURE REDUCING VALVE

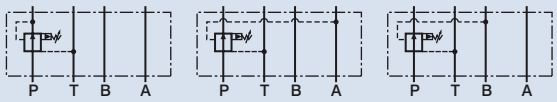

MRP-04 MRA-04 MRB-04

D

How to order

MR P - 04 - ※ - ※

1 2 3 4 5

1	Model
2	Control port P: P port A: A port B: B port
3	Nominal valve size 04: 1/2" (ISO CETOP 7, NFPA D07, DIN NG 16)
4	Pressure adjusting range B: 8~70 bar C: 8~140 bar H: 10~250 bar
5	Adjustment option None: Tool adjustment K: Hand-bar adjustment

Specifications

Model	Max. Operating Pressure (bar)	Pressure Adj. Range (bar)	Max. Flow (lpm)	Weight (kg)
MRP-04	350	B: 8~70	300	7.5
MRA-04		C: 8~140		7.5
MRB-04		H: 10~250		7.5

Dimensions

MRP-04

Mounting interface
ISO 4401-AD-07-4-A

Unit: mm
(inch)

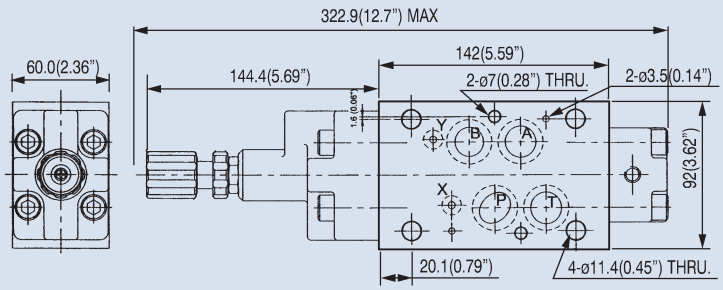

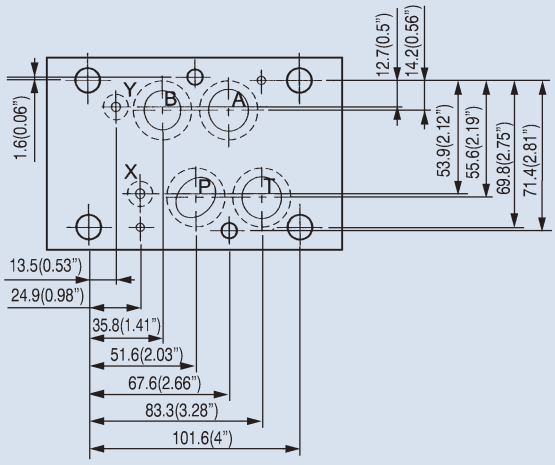

MODULAR COUNTERBALANCE VALVE

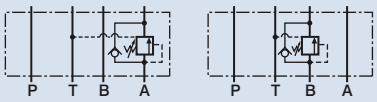

MHA-04 MHB-04

D

How to order

MH A - 04 - ※ - ※

1 2 3 4 5

1	Model
2	Control port A: A port B: B port
3	Nominal valve size 04: 1/2" (ISO CETOP 7, NFPA D07, DIN NG 16)
4	Pressure adjusting range B: 8~70 bar C: 10~140 bar
5	Adjustment option None: Tool adjustment K: Hand-bar adjustment

Specifications

Model	Max. Operating Pressure (bar)	Pressure Adj. Range (bar)	Max. Flow (lpm)	Weight (kg)
MHA-04	315	B: 8~70 C: 10~140	300	7.5
MHB-04				7.5

Dimensions

MHA-04

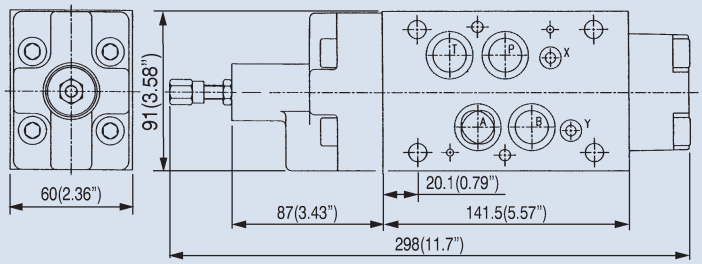

Mounting interface
ISO 4401-AD-07-4-A

Unit: mm
(inch)

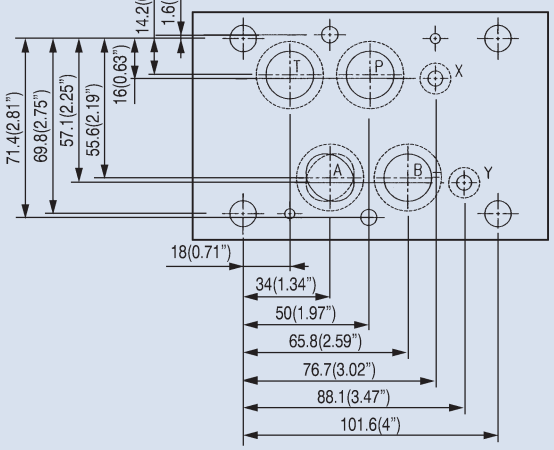

MODULAR PILOT OPERATED CHECK VALVE

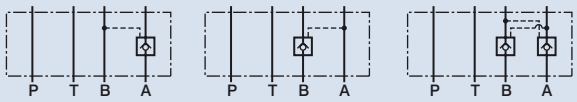

D

How to order

MP W - 04
1 2 3

1	Model
2	Control port A: A port B: B port W: A and B ports
3	Nominal valve size 04: 1/2" (ISO CETOP 7, NFPA D07, DIN NG 16)

Specifications

Model	Max. Operating Pressure (bar)	Cracking Pressure (bar)	Max. Flow (lpm)	Weight (kg)
MPA-04	315	2	300	5.0
MPB-04				5.0
MPW-04				5.5

Dimensions

MPW-04

Unit: mm (inch)

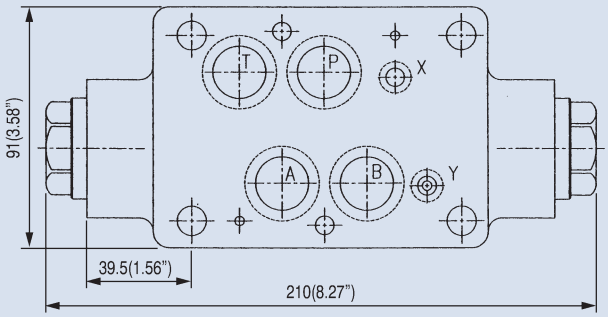

Mounting interface
ISO 4401-AD-07-4-A

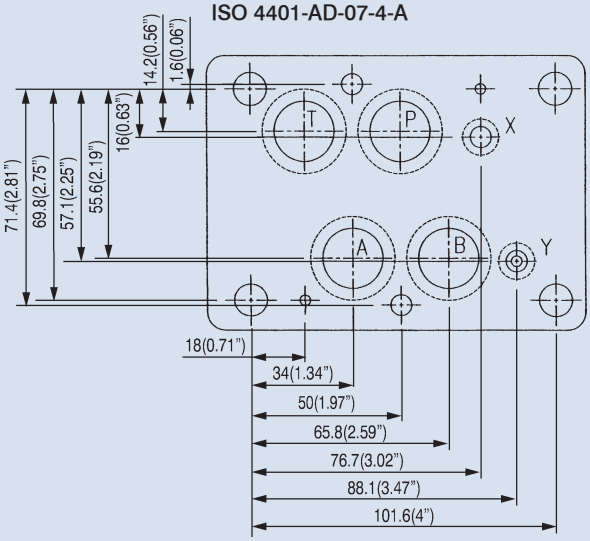

MODULAR CHECK VALVE

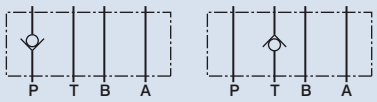

MCP-04 MCT-04

D

How to order

MC P - 04 - ※

1 2 3 4

1	Model
2	Control port P: P port T: T port
3	Nominal valve size 04: 1/2" (ISO CETOP 7, NFPA D07, DIN NG 16)
4	Cracking pressure 0: 0.5 bar 5: 5 bar

Specifications

Model	Max. Operating Pressure (bar)	Cracking Pressure (bar)	Max. Flow (lpm)	Weight (kg)
MCP-04	315	0: 0.5 5: 5	300	4.8
MCT-04				4.8

Dimensions

MCP-04

Unit: mm (inch)

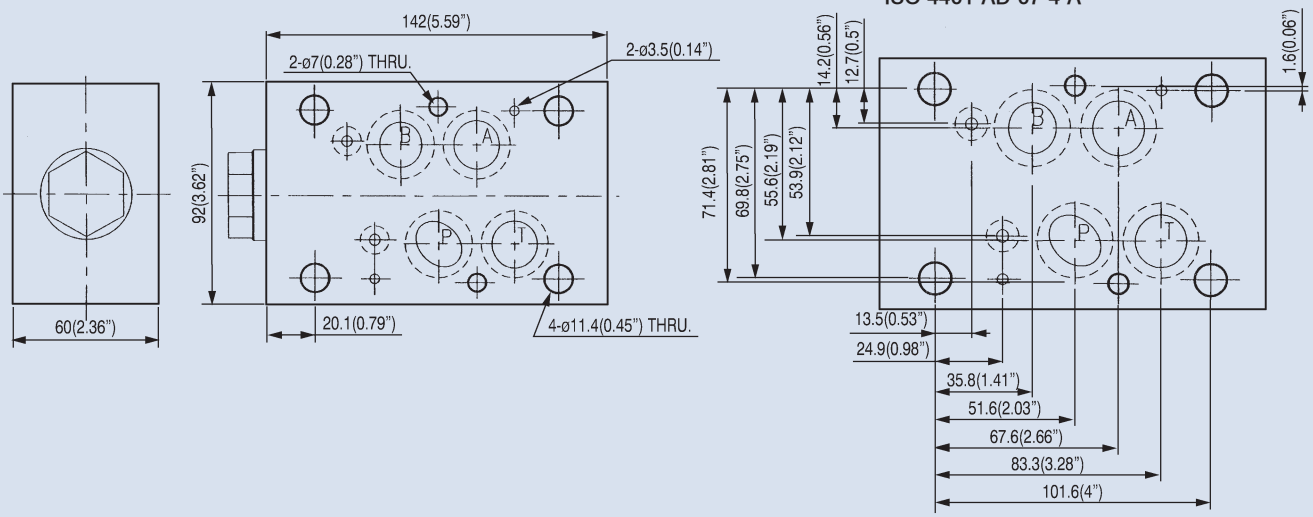

MODULAR THROTTLE AND CHECK VALVE

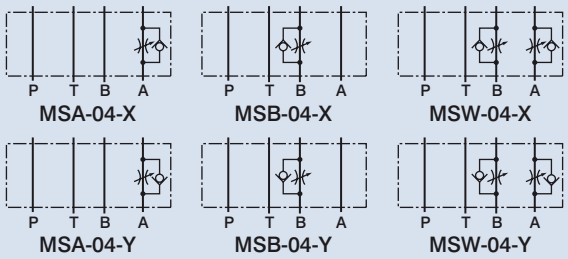

D

How to order

MS W - 04 - ※ - ※

1 2 3 4 5

1	Model
2	Control port A: A port B: B port W: A and B ports
3	Nominal valve size 04: 1/2" (ISO CETOP 7, NFPA D07, DIN NG 16)
4	Control type X: Meter-out Y: Meter-in
5	Adjustment option None: Tool adjustment K: Hand-bar adjustment

Specifications

Model	Max. Operating Pressure (bar)	Flow Adj. Range (lpm)	Max. Flow (lpm)	Weight (kg)
MSA-04	315	0.8~300	320	5.0
MSB-04				5.0
MSW-04				5.5

Dimensions

MSW-04

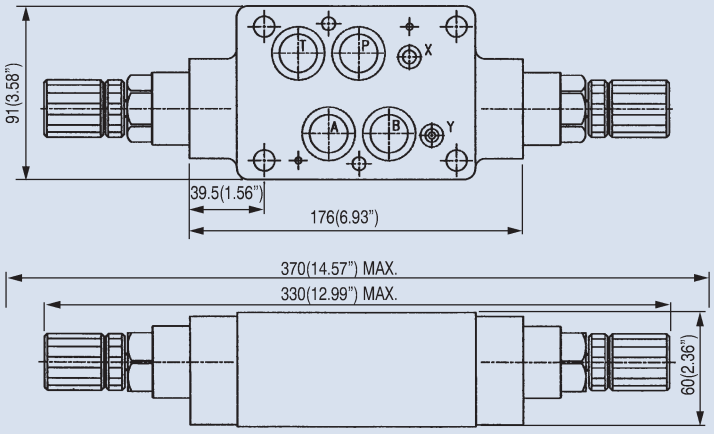

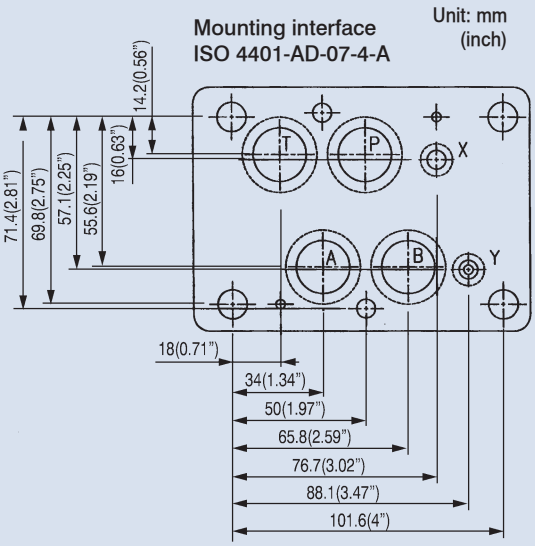

MODULAR RELIEF VALVE

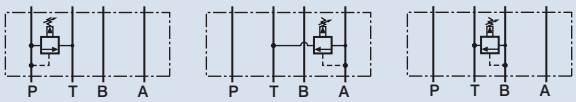

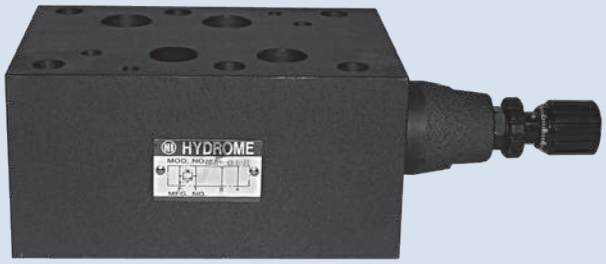

D

How to order

MB P - 06 - ※ - ※

1 2 3 4 5

1	Model
2	Control port P: P port A: A port B: B port
3	Nominal valve size 06: 3/4" (ISO CETOP 8, NFPA D08, DIN NG 25)
4	Pressure adjusting range B: 7~70 bar H: 10~230 bar
5	Adjustment option None: Tool adjustment K: Hand-bar adjustment

Specifications

Model	Max. Operating Pressure (bar)	Pressure Adj. Range (bar)	Max. Flow (lpm)	Weight (kg)
MBP-06	250	B: 7~70 H: 10~230	250	11.5
MBA-06				11.5
MBB-06				11.5

Dimensions

MBP-06, MBA-06, MBB-06

Unit: mm

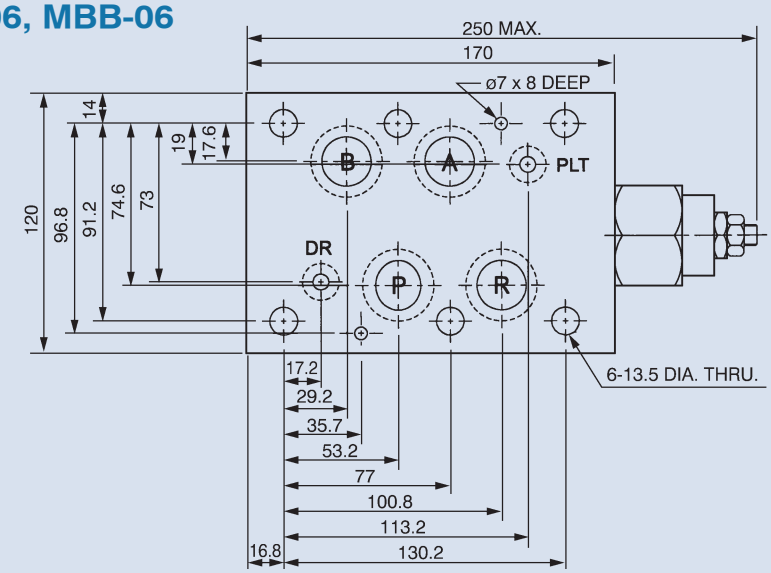

MODULAR PRESSURE REDUCING VALVE

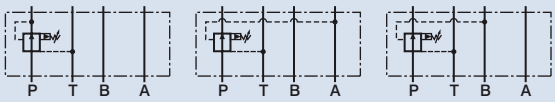

D

How to order

MR P - 06 - ※ - ※

1 2 3 4 5

1	Model
2	Control port P: P port A: A port B: B port
3	Nominal valve size 06: 3/4" (ISO CETOP 8, NFPA D08, DIN NG 25)
4	Pressure adjusting range B: 7~70 bar H: 10~230 bar
5	Adjustment option None: Tool adjustment K: Hand-bar adjustment

Specifications

Model	Max. Operating Pressure (bar)	Pressure Adj. Range (bar)	Max. Flow (lpm)	Weight (kg)
MRP-06	250	B: 7~70 H: 10~230	250	11.6
MRA-06				11.6
MRB-06				11.6

Dimensions

MRP-06, MRA-06, MRB-06

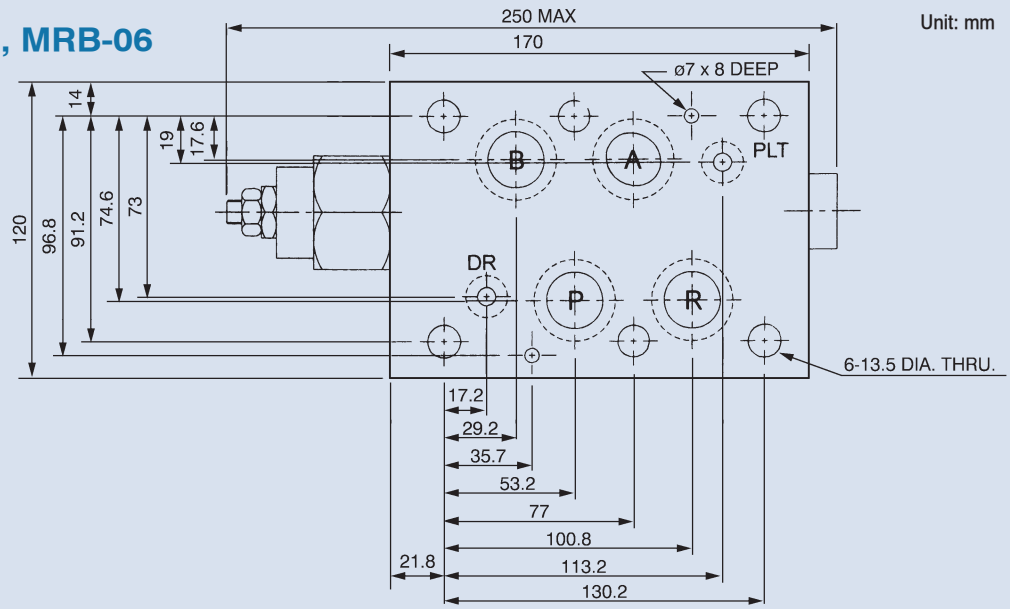

MODULAR COUNTERBALANCE VALVE

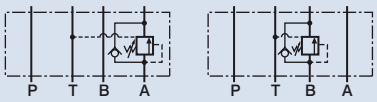

MHA-06 MHB-06

D

How to order

MH A - 06 - ※ - ※

1 2 3 4 5

1	Model
2	Control port A: A port B: B port
3	Nominal valve size 06: 3/4" (ISO CETOP 8, NFPA D08, DIN NG 25)
4	Pressure adjusting range B: 7~70 bar H: 10~230 bar
5	Adjustment option None: Tool adjustment K: Hand-bar adjustment

Specifications

Model	Max. Operating Pressure (bar)	Pressure Adj. Range (bar)	Max. Flow (lpm)	Weight (kg)
MHA-06	250	B: 7~70 H: 10~230	250	12.5
MHB-06				12.5

Dimensions

MHA-06, MHB-06

Unit: mm

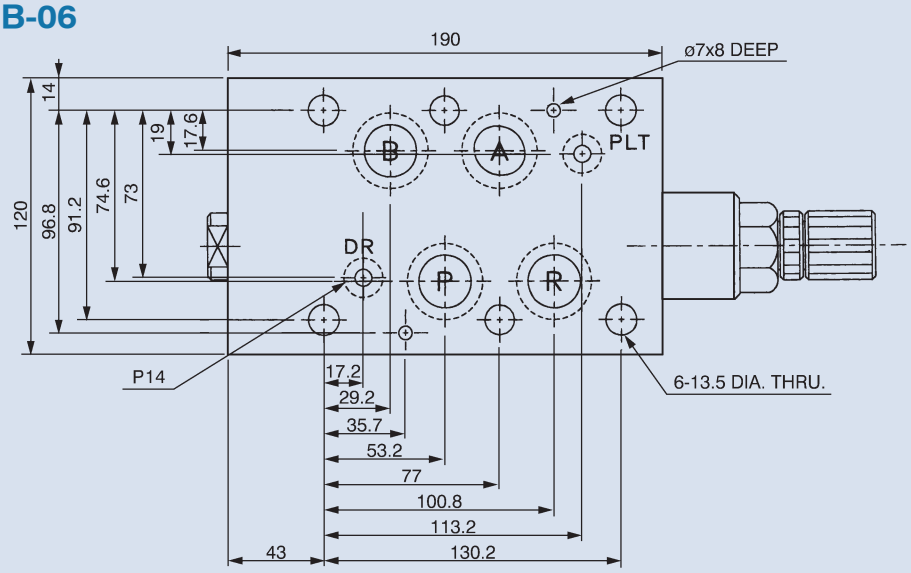

MODULAR PILOT OPERATED CHECK VALVE

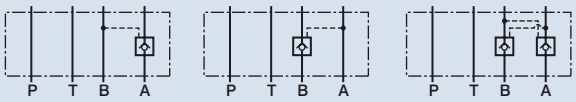

D

How to order

MP W - 06
1 2 3

1	Model
2	Control port A: A port B: B port W: A and B ports
3	Nominal valve size 06: 3/4" (ISO CETOP 8, NFPA D08, DIN NG 25)

Specifications

Model	Max. Operating Pressure (bar)	Cracking Pressure (bar)	Max. Flow (lpm)	Weight (kg)
MPA-06	250	2	250	12.6
MPB-06				12.6
MPW-06				13

Dimensions

MPW-06

Unit: mm

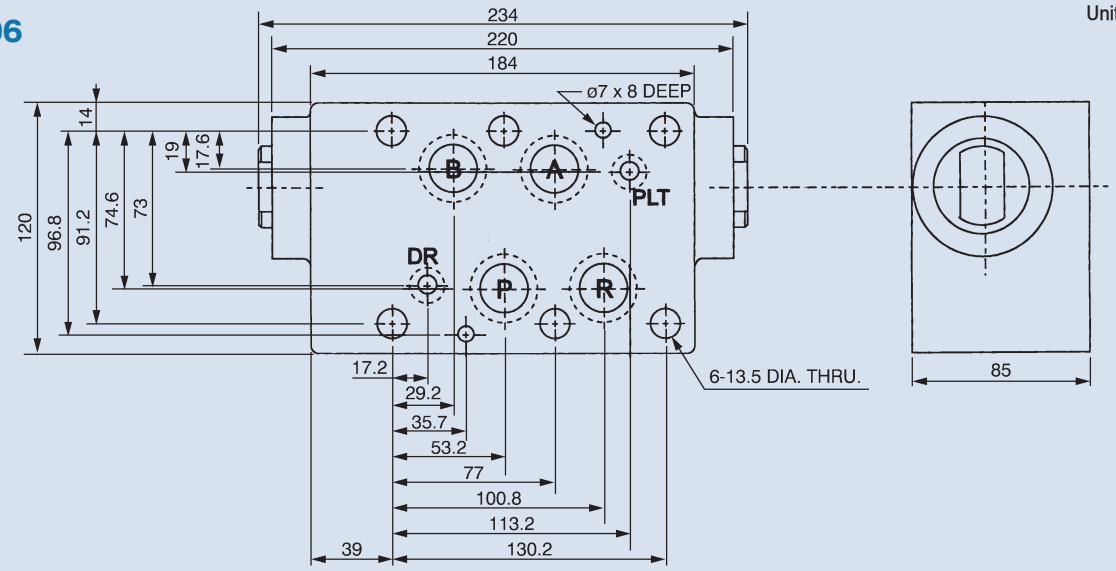

MODULAR CHECK VALVE

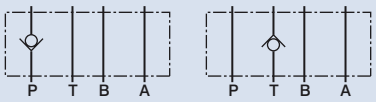

MCP-06 MCT-06

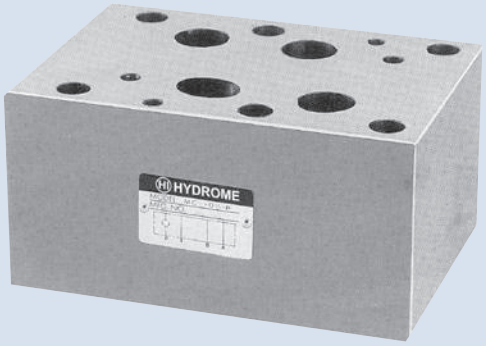

D

How to order

MC P - 06 - ※

1 2 3 4

1	Model
2	Control port P: P port T: T port
3	Nominal valve size 06: 3/4" (ISO CETOP 8, NFPA D08, DIN NG 25)
4	Cracking pressure 0: 0.5 bar 5: 5 bar

Specifications

Model	Max. Operating Pressure (bar)	Cracking Pressure (bar)	Max. Flow (lpm)	Weight (kg)
MCP-06	250	0: 0.5 5: 5	250	10.5
MCT-06				10.5

Dimensions

MCP-06

Unit: mm

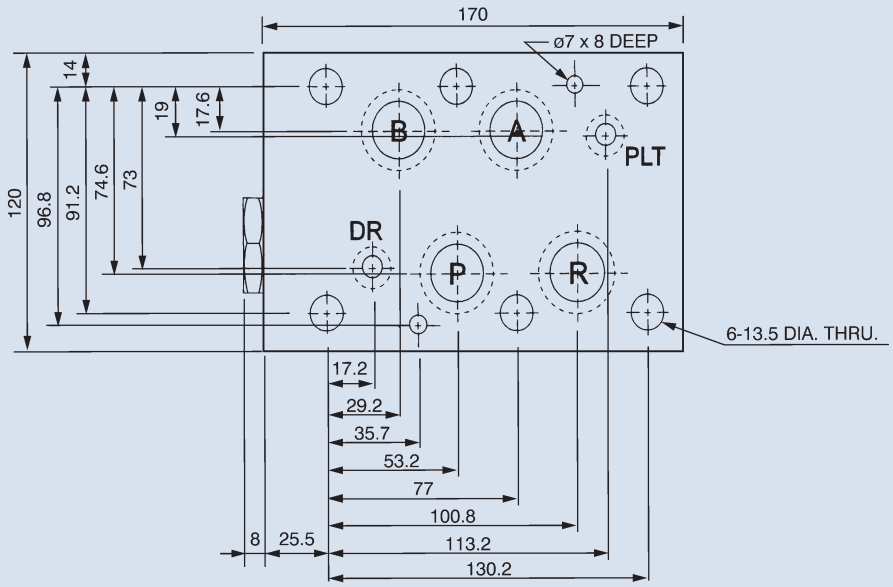

MODULAR THROTTLE AND CHECK VALVE

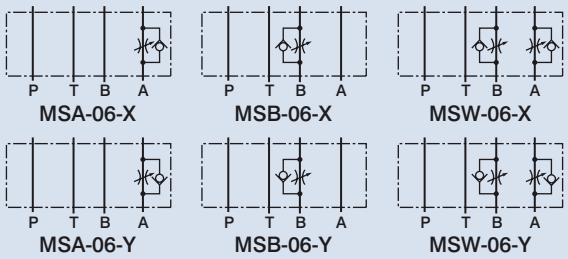

D

How to order

MS W - 06 - ※ - ※

1 2 3 4 5

1	Model
2	Control port A: A port B: B port W: A and B ports
3	Nominal valve size 06: 3/4" (ISO CETOP 8, NFPA D08, DIN NG 25)
4	Control type X: Meter-out Y: Meter-in
5	Adjustment option None: Tool adjustment

Specifications

Model	Max. Operating Pressure (bar)	Flow Adj. Range (lpm)	Max. Flow (lpm)	Weight (kg)
MSA-06	250	0.8~200	250	12.2
MSB-06				12.2
MSW-06				12.6

Dimensions

MSW-06

Unit: mm

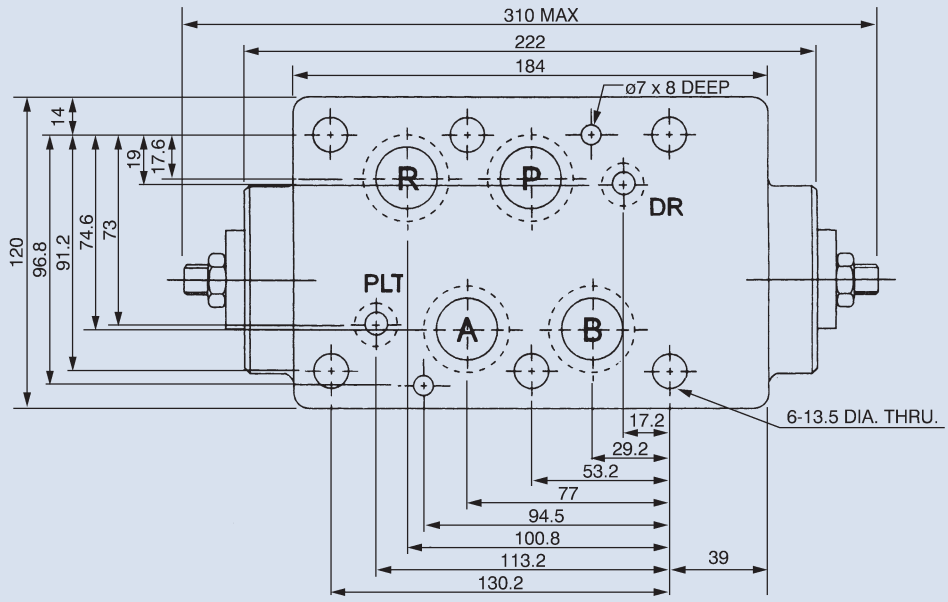

MODULAR SOLENOID CHECK VALVE

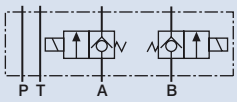

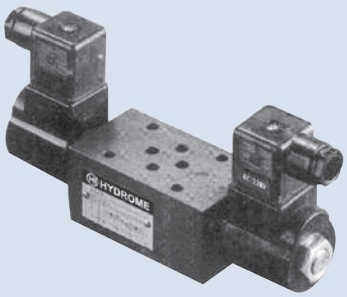

D

How to order

SMC W - 02 - NC - A11

1 2 3 4 5

1	Model
2	Control port A: A port B: B port W: A and B ports
3	Nominal valve size 02: 1/4" (ISO CETOP 3, NFPA D03, DIN NG 6)
4	NC: Normal closed NO: Normal open
5	A11: AC110V (50/60HZ) A22: AC220V (50/60HZ) D1: DC12V D2: DC24V

Specifications

Model	Max. Operating Pressure (bar)	Rated Flow (lpm)	Weight (kg)
SMCA-02	250	20	1.08
SMCB-02			1.08
SMCW-02			1.15

Dimensions

SMCW-02

Unit: mm (inch)

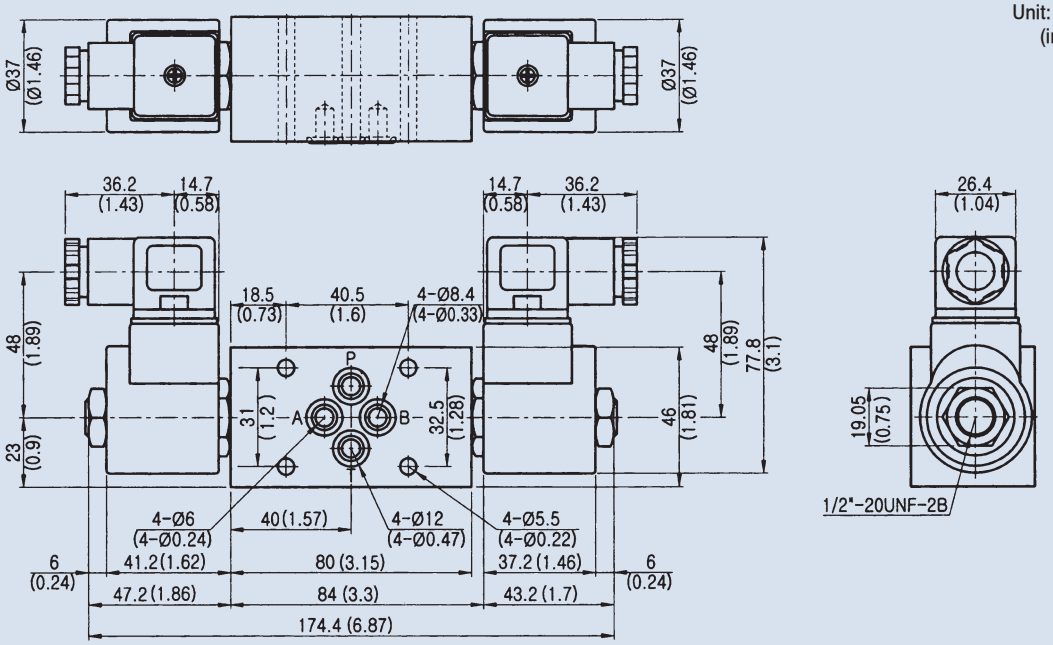

MODULAR SOLENOID CHECK VALVE

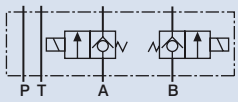

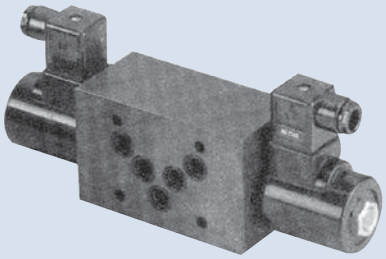

D

How to order

SMC W - 03 - NC - A11

1 2 3 4 5

1	Model
2	Control port A: A port B: B port W: A and B ports
3	Nominal valve size 03: 3/8" (ISO CETOP 5, NFPA D05, DIN NG 10)
4	NC: Normal closed NO: Normal open
5	A11: AC110V (50/60HZ) A22: AC220V (50/60HZ) D1: 12V D2: 24V

Specifications

Model	Max. Operating Pressure (bar)	Rated Flow (lpm)	Weight (kg)
SMCA-03	250	40	2.8
SMCB-03			2.8
SMCW-03			3.0

Dimensions

SMCW-03

Unit: mm (inch)

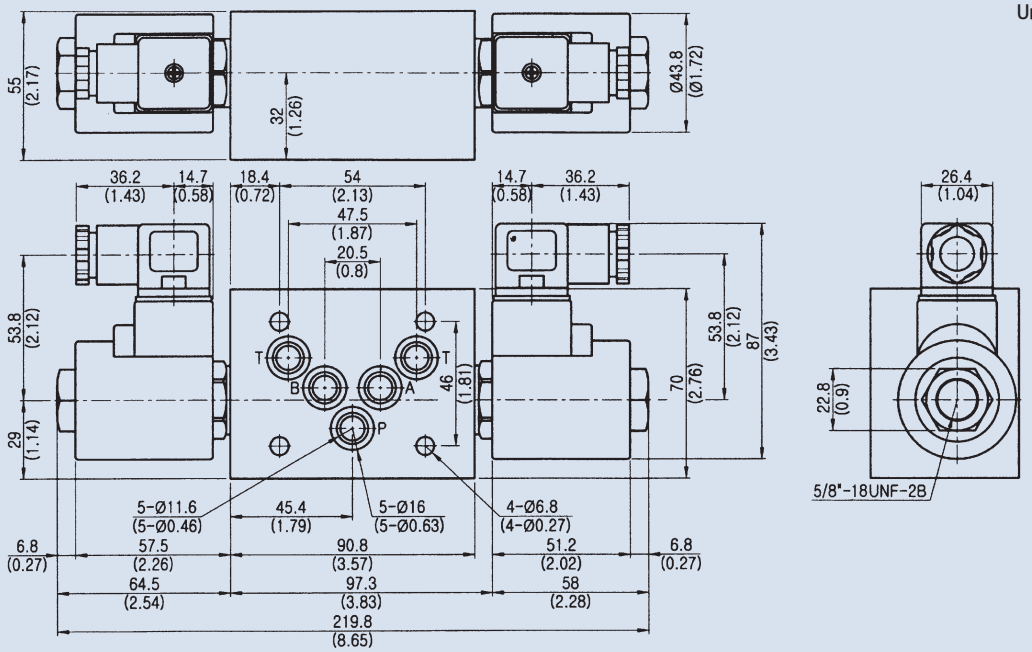

MODULAR SOLENOID FLOW CONTROL VALVE

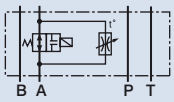

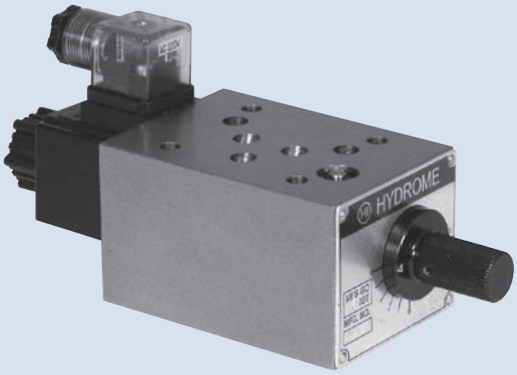

D

How to order

MFS - GO - 02 - 02 - T - A1

1 2 3 4 5

1	Model
2	Flow adjusting range
3	Nominal valve size 02: 1/4" (ISO CETOP 3, NFPA D03, DIN NG 6) 03: 3/8" (ISO CETOP 5, NFPA D05, DIN NG 10)
4	Control port P: P port T: T port A: A port
5	A1: AC110V (60HZ) A2: AC220V (60HZ) A3: AC110V (50HZ) A4: AC220V (50HZ) D1: DC12V D2: DC24V

Specifications

Model	Flow Rate Adj. (l/min)	Free Flow (l/min)	Max. Pressure (bar)	Weight (kg)
MFS-GO-02-02	0.1~2	20	140	2.42
MFS-GO-04-02	0.1~4			
MFS-GO-06-02	0.1~6			
MFS-GO-02-03	0.1~2	30~60		3.3
MFS-GO-04-03	0.1~4			
MFS-GO-08-03	0.1~8			
MFS-GO-12-03	0.1~12			

Dimensions

Unit: mm

MFS-GO-02

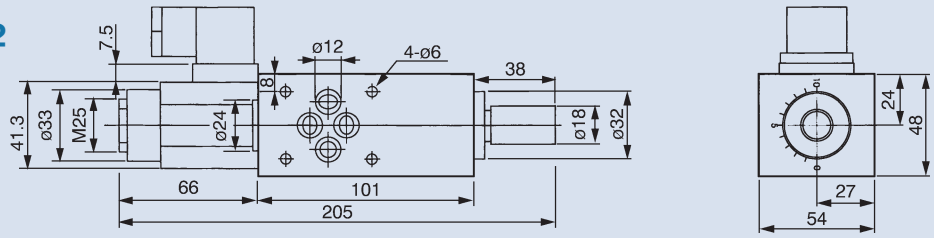

MFS-GO-03

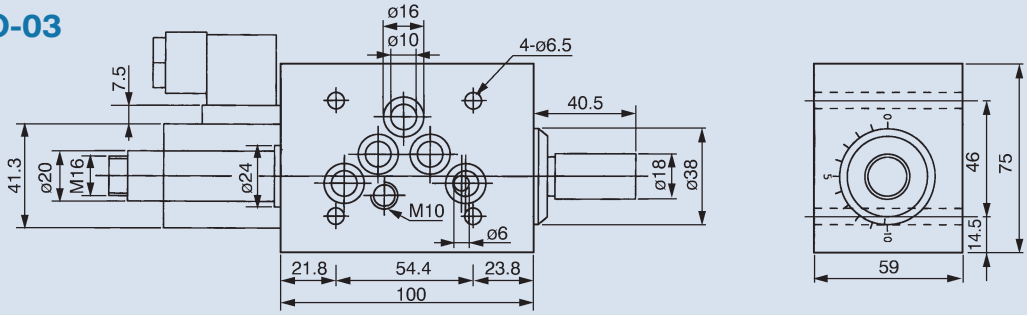

4ManPro
Elements For Manufacturing Processes

HI HYDROME

VÁLVULAS TIPO INSERTO (INSERT TYPE VALVE)

CARTRIDGE SOLENOID OPERATED CHECK VALVE

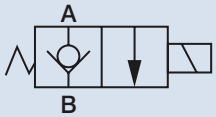

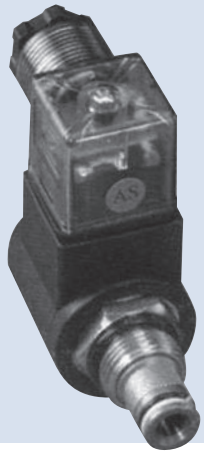

How to order

HV2066, HV3066 - NC - ※ - A22

1 2 3 4

1	Model HV2066: Size 08 HV3066: Size 10
2	NC: Normal closed NO: Normal open
3	None: Standard OM: With manual
4	Voltage A11: AC110V (50/60HZ) A22: AC220V (50/60HZ) D1: DC12V D2: DC24V

Specifications

Model	Max. Pressure (bar)	Rated Flow (lpm)	Max. Flow (lpm)	Weight (kg)
HV2066	250	15	20	0.28
HV3066		30	40	0.53

Dimensions

Unit: mm (inch)

HV2066

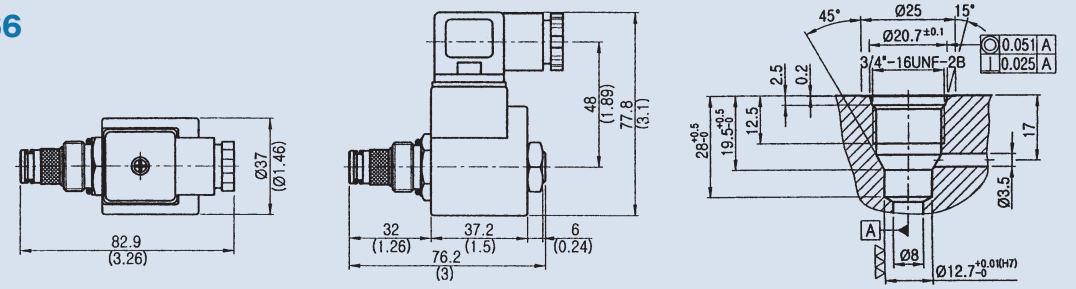

HV3066

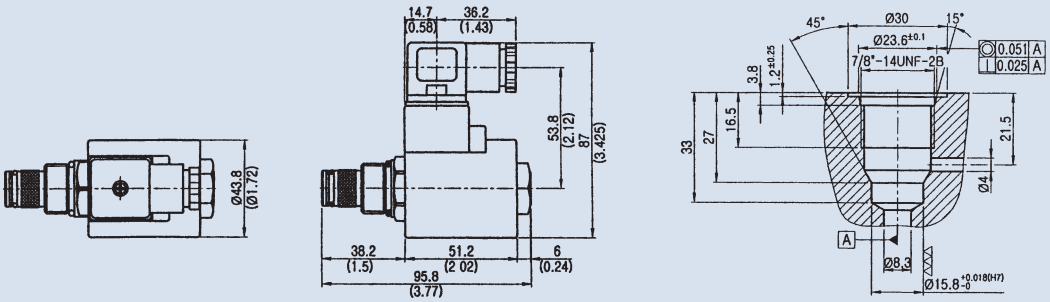

CARTRIDGE SOLENOID OPERATED CHECK VALVE

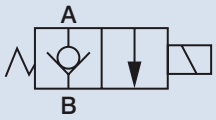

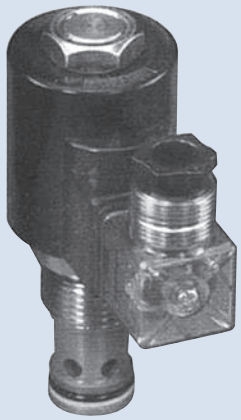

E

How to order

HV6066, HV8066 - NC - ※ - A22

1 2 3 4

1	Model HV6066: Size 12 HV8066: Size 16
2	NC: Normal closed NO: Normal open
3	None: Standard OM: With manual
4	Voltage A11: AC110V (50/60HZ) A22: AC220V (50/60HZ) D1: DC12V D2: DC24V

Specifications

Model	Max. Pressure (bar)	Rated Flow (lpm)	Max. Flow (lpm)	Weight (kg)
HV6066	250	80	80	0.58
HV8066		150	150	0.68

Dimensions

Unit: mm (inch)

HV6066

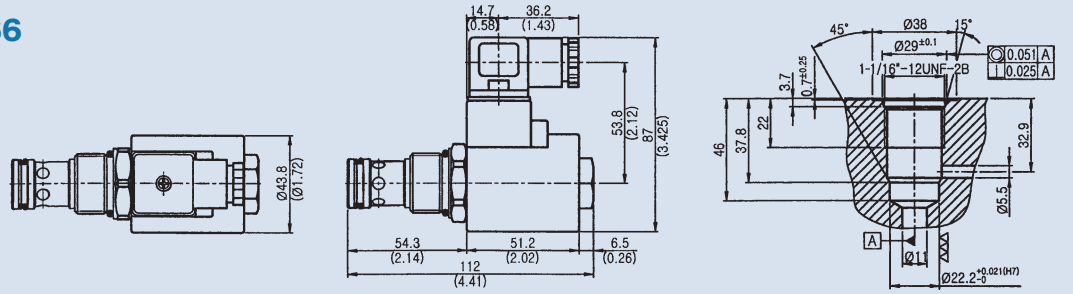

HV8066

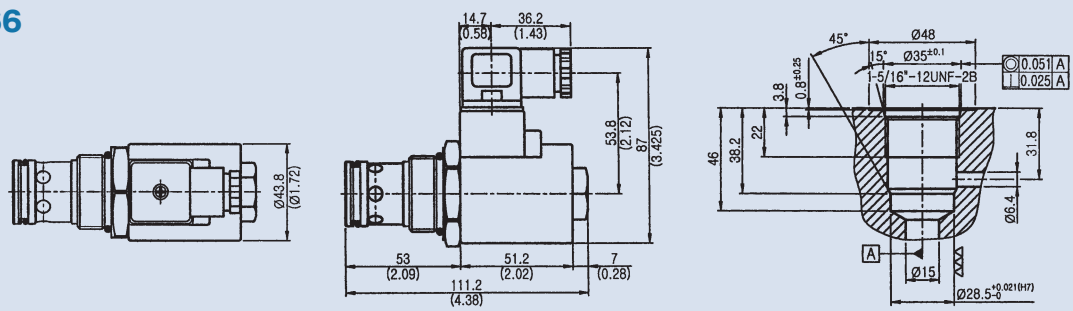

CARTRIDGE SOLENOID OPERATED DOUBLE CHECK VALVE

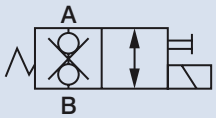

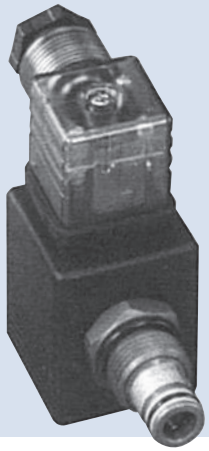

How to order

HV2070, HV3070 - NC - ※ - A22

1 2 3 4

1	Model
2	NC: Normal closed NO: Normal open
3	None: Standard OM: With manual
4	Voltage A11: AC110V (50/60HZ) A22: AC220V (50/60HZ) D1: DC12V D2: DC24V

Specifications

Model	Max. Pressure (bar)	Rated Flow (lpm)	Max. Flow (lpm)	Weight (kg)
HV2070	250	15	20	0.34
HV3070		20	30	0.5

Dimensions

Unit: mm (inch)

HV2070

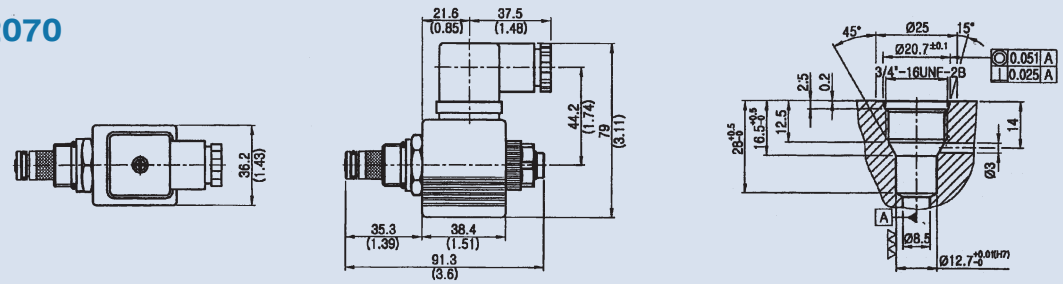

HV3070

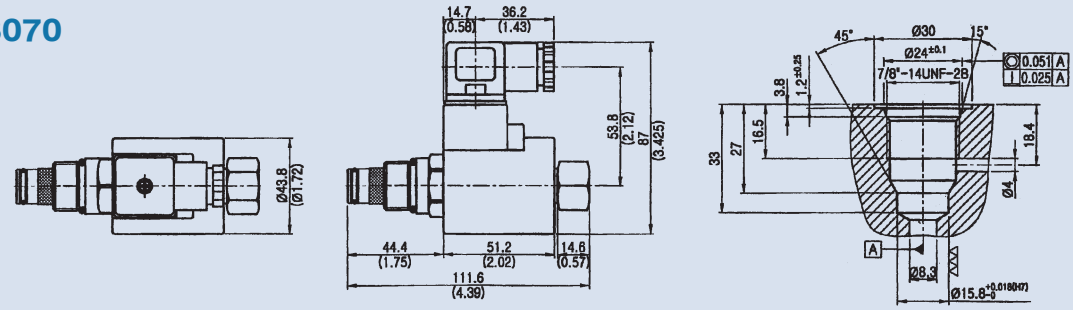

CARTRIDGE SOLENOID OPERATED DOUBLE CHECK VALVE, MANUAL CHECK VALVE

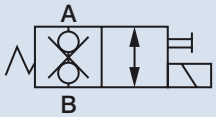

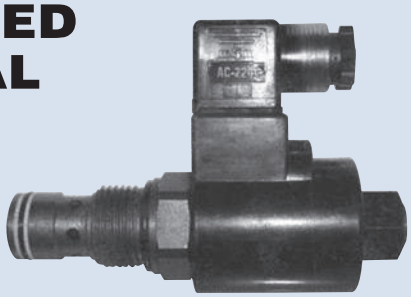

E

How to order

HV3570, HV6070 - NC - ※ - A22

1 2 3 4

1	Model
2	NC: Normal closed NO: Normal open
3	None: Standard OM: With manual
4	Voltage A11: AC110V (50/60HZ) A22: AC220V (50/60HZ) D1: DC12V D2: DC24V

Specifications

Model	Max. Pressure (bar)	Rated Flow (lpm)	Max. Flow (lpm)	Weight (kg)
HV3570	250	25	35	0.51
HV6070		50	60	0.62

Dimensions

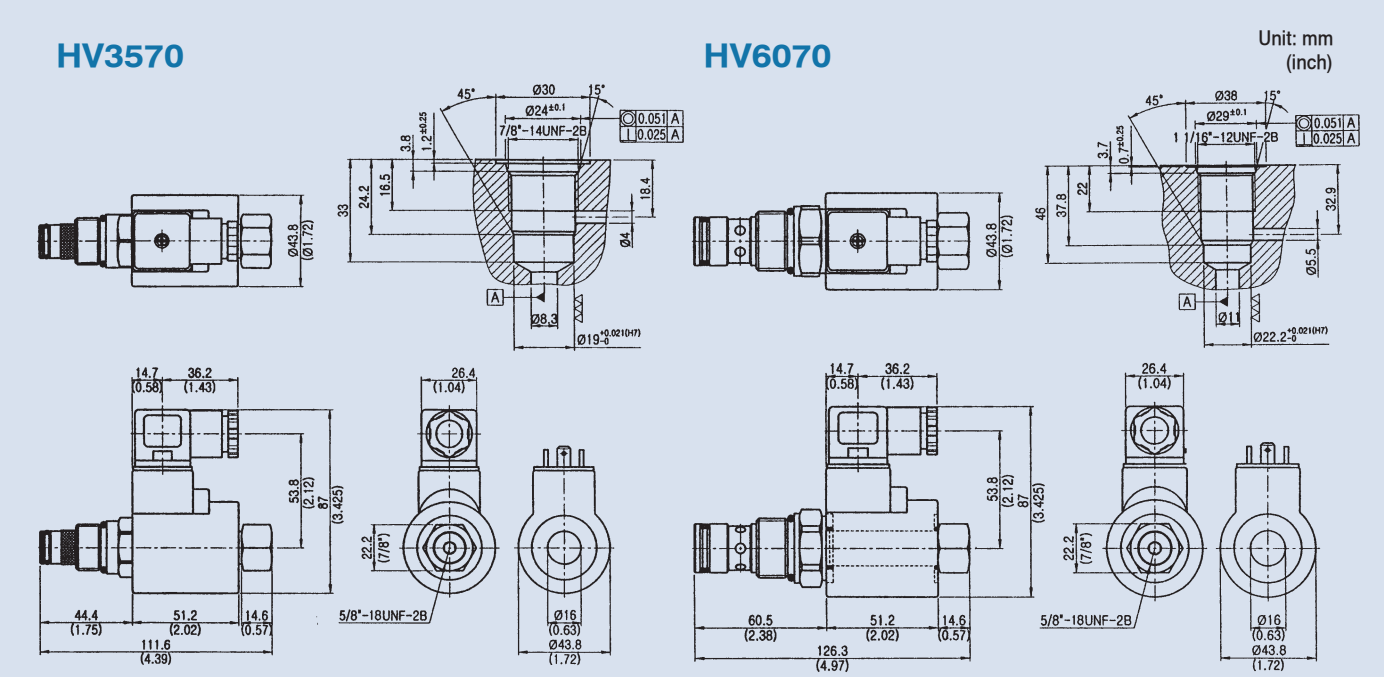

CARTRIDGE SOLENOID OPERATED CHECK VALVE WITH BODY

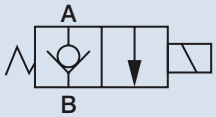

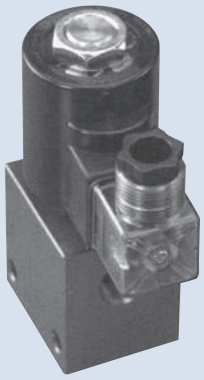

E

How to order

HV 2068-02, HV 3068-03 - NC - ※ - A22

1 2 1 2 3 4 5

1	Model HV2068: HV2066+body HV3068: HV3066+body
2	Port size 2068-02: 1/4" (normal) 2068-03: 3/8" 3068-03: 3/8" (normal) 3068-04: 1/2"
3	NC: Normal closed NO: Normal open
4	None: Standard OM: With manual
5	Voltage A11: AC110V (50/60HZ) A22: AC220V (50/60HZ) D1: DC12V D2: DC24V

Specifications

Model	Max. Pressure (bar)	Rated Flow (lpm)	Max. Flow (lpm)	Weight (kg)
HV2068	250	15	20	0.46
HV3068		30	40	0.74

Dimensions

Unit: mm (inch)

HV2068

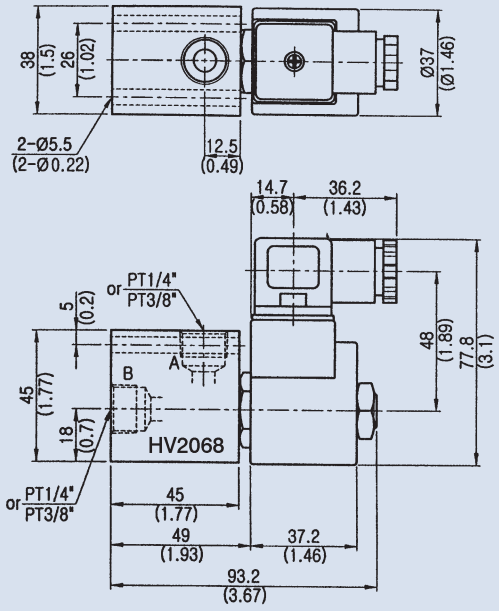

HV3068

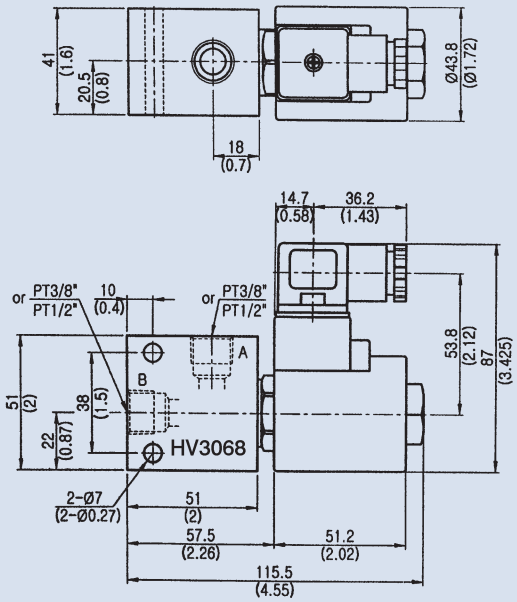

CARTRIDGE SOLENOID OPERATED CHECK VALVE WITH BODY

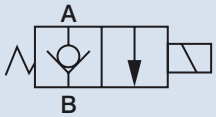

E

How to order

HV 6068, HV 8068 - NC - ※ - A22

1 2 1 2 3 4 5

1	Model HV6068: HV6066+body HV8068: HV8066+body
2	Port size 6068: PT3/4" 8068: PT1"
3	NC: Normal closed NO: Normal open
4	None: Standard OM: With manual
5	Voltage A11: AC110V (50/60HZ) A22: AC220V (50/60HZ) D1: DC12V D2: DC24V

Specifications

Model	Max. Pressure (bar)	Rated Flow (lpm)	Max. Flow (lpm)	Weight (kg)
HV6068	250	80	80	1.08
HV8068		150	150	2.5

Dimensions

Unit: mm (inch)

HV6068

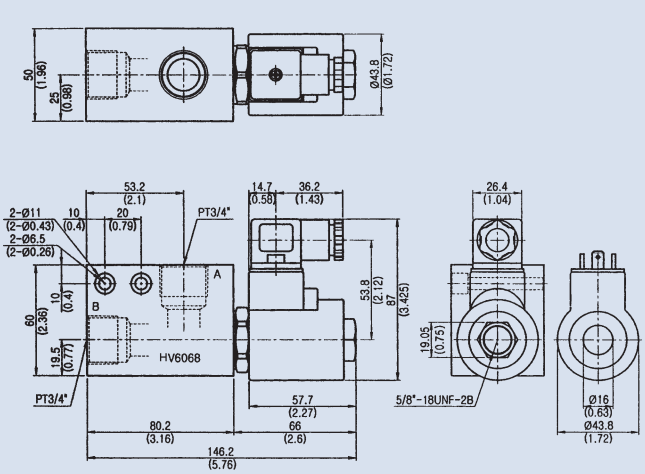

HV8068

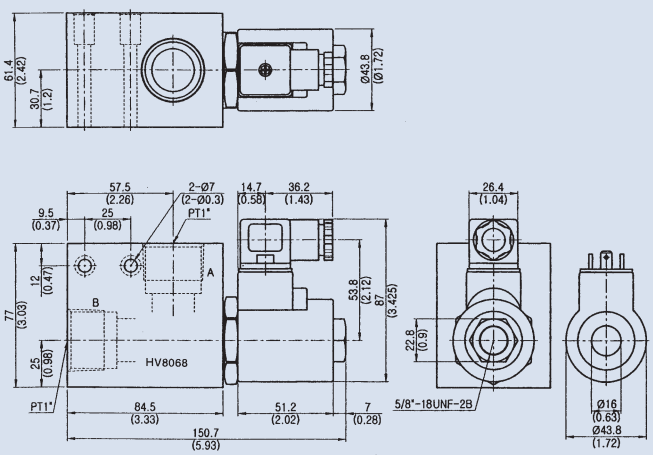

CARTRIDGE SOLENOID OPERATED CHECK VALVE WITH BODY

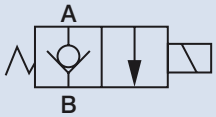

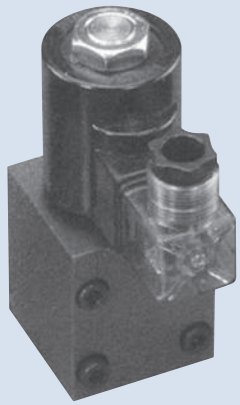

How to order

HV2067, HV3067 - G 02 - NC - ※ - A11

1 2 3 4 5 6

1	Model HV2067: HV2066+body HV3067: HV3066+body
2	Sub-plate mounting type
3	Norminal valve size 02: 1/4" (ISO CETOP 3, NFPA D03, DIN NG 6) for HV2067 03: 3/8" for HV3067
4	NC: Normal closed NO: Normal open
5	None: Standard OM: With manual
6	Voltage A11: AC110V (50/60HZ) A22: AC220V (50/60HZ) D1: DC12V D2: DC24V

Specifications

Model	Max. Pressure (bar)	Rated Flow (lpm)	Max. Flow (lpm)	Weight (kg)
HV2067	250	15	20	0.69
HV3067		30	40	0.87

Dimensions

Unit: mm
(inch)

HV2067

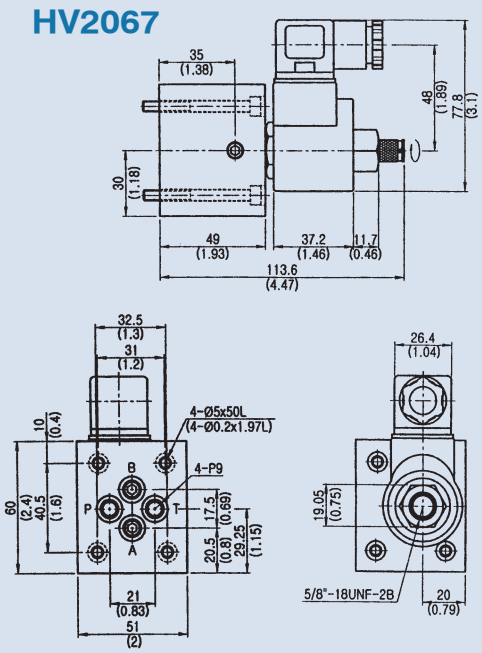

HV3067

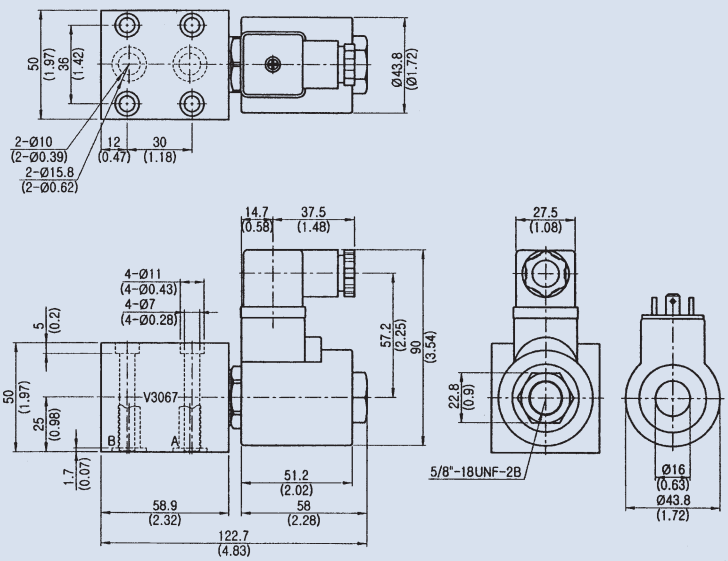

CARTRIDGE SOLENOID OPERATED VALVE SPOOL 3-WAY 2-POSITION

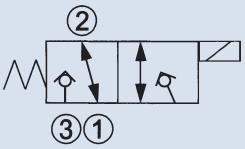

VWE-※-50 (poppet)

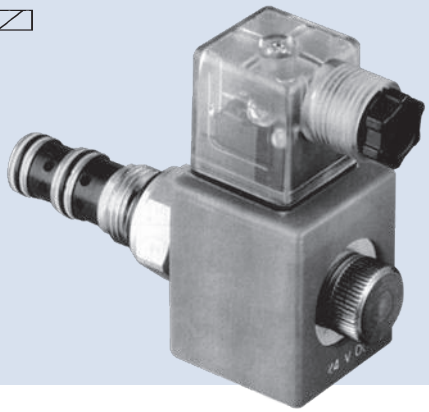

CONTROL PORTS

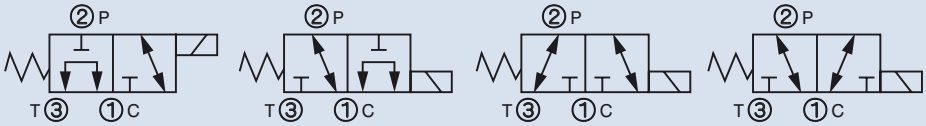

VWE-※-10 VWE-※-20 VWE-※-30 VWE-※-40

E

How to order

VWE - 08 - 10 - A1 - ※

1 2 3 4 5

1	Model
2	Mounting size 08: 08W-3 Cavity: CS08-3N (see page 163) 10: 10W-3 Cavity: CS10-3N (see page 163)
3	Control port
4	Voltage A1: RAC110V (50/60HZ) A2: RAC220V (50/60HZ) D1: DC12V D2: DC24V
5	Wiring type None: DIN plug X: Double lead

Specifications

Model	Max. Pressure (bar)	Max. Flow (lpm)	Weight (kg)
VWE-08-10	210	10	0.31
VWE-08-20			
VWE-08-30			
VWE-08-40			
VWE-08-50			
VWE-10-20		20	0.2
VWE-10-30			
VWE-10-40			

Dimensions

Unit: mm (inch)

VWE-08

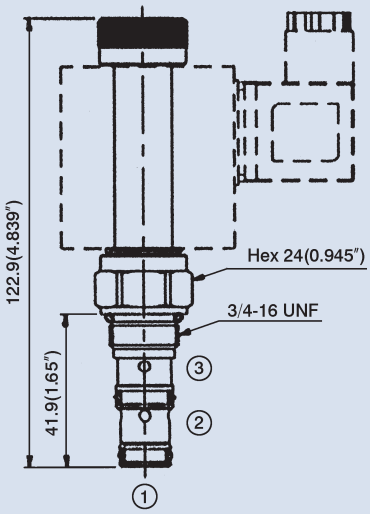

VWE-10

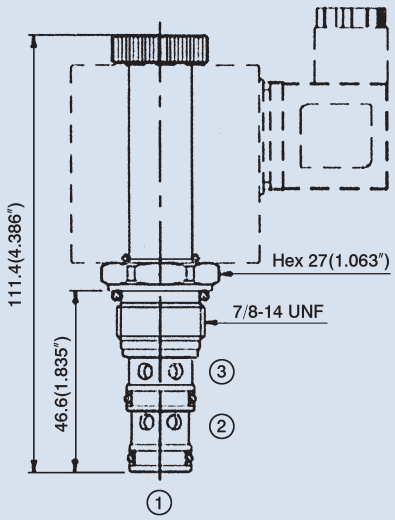

CARTRIDGE SOLENOID OPERATED VALVE SPOOL 4-WAY 2(3)-POSITION

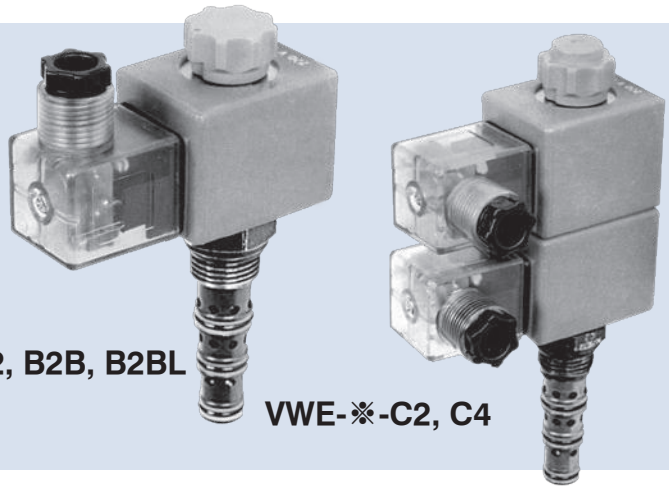

VWE-※-B2, B2B, B2BL

VWE-※-C2, C4

How to order

VWE - 08 - B2 - A1 - ※

1 2 3 4 5

1	Model	
2	Mounting Size	08:08W-4 Cavity: CS08-4N (see page 164) 10:10W-4 Cavity: CS10-4N (see page 164)
3	Control port	

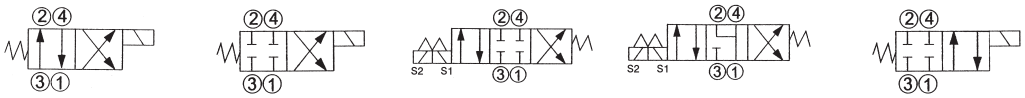

VWE-※-B2 VWE-※-B2B VWE-※-C2 VWE-※-C4 VWE-※-B2BL

4	Voltage	A1: RAC110V (50/60HZ) A2: RAC220V (50/60HZ) D1: DC12V D2: DC24V
5	Wiring type	None: DIN plug X: Double lead

Specifications

Model	Max. Pressure (bar)	Max. Flow (lpm)	Weight (kg)
VWE-08-B2	210	10	0.45
VWE-08-B2B			
VWE-08-B2BL			
VWE-08-C2			0.75
VWE-08-C4			
VWE-10-B2		20	0.45

Performance

VWE-08

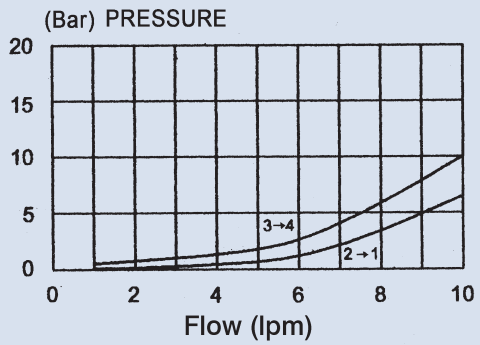

VWE-10

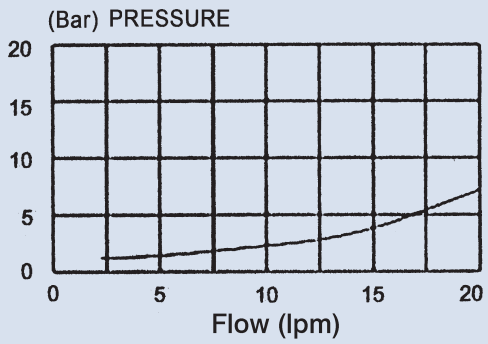

CARTRIDGE SOLENOID OPERATED CHECK VALVE

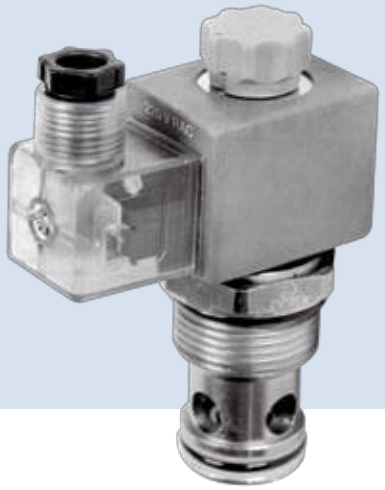

E

How to order

VSE - 10 - ※ - A2 - X - Y

1 2 3 4 5 6

1	Model	
2	Mounting size	10: Cavity tooling E-017 Size CSE 017-2N (see page 165) 12: Cavity tooling E-021 Size CSE 021-2N (see page 166)
3	Control port	20: 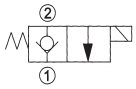 21: 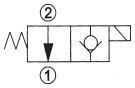 22: 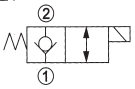 23: 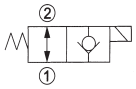 26: 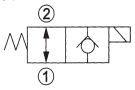 27: 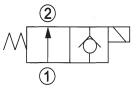 28: 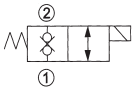 29: 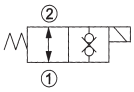 30: 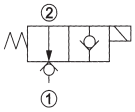 31: 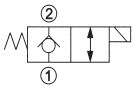 32: 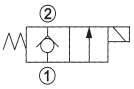 33: 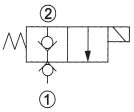
4	Voltage	A1: RAC110V (50/60HZ) A2: RAC220V (50/60HZ) D1: DC12V D2: DC24V
5	Wiring type	None: DIN plug X: Double lead
6	Adjustment option	None: Standard Y: Twist style manual override (for control ports 20, 22, 28, 31, 32, 33) Push style manual override (for control ports 21, 23, 26, 27, 29, 30)

Specifications

Model	Max. Pressure (bar)	Max. Flow (lpm)	Weight (kg)
VSE-10-※	350	70	0.4
VSE-12-※		150	0.63

CARTRIDGE SOLENOID OPERATED CHECK VALVE

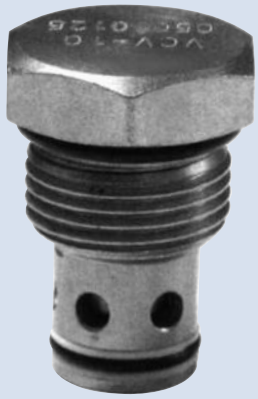

E

How to order

VSE - 20 - 31 - A2 - X - Y

1 2 3 4 5 6

1	Model
2	Mounting size 20: Size Cavity: E-04
3	Control port 31: 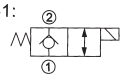
4	Voltage A1: RAC110V (50/60HZ) A2: RAC220V (50/60HZ) D1: DC12V D2: DC24V
5	Wiring type None: DIN plug X: Double lead
6	Adjustment option None: Standard Y: Twist style manual override

Specifications

Model	Max. Pressure (bar)	Max. Flow (lpm)	Weight (kg)
VSE-20-31	350	260	1.14

Dimensions/Performance curve

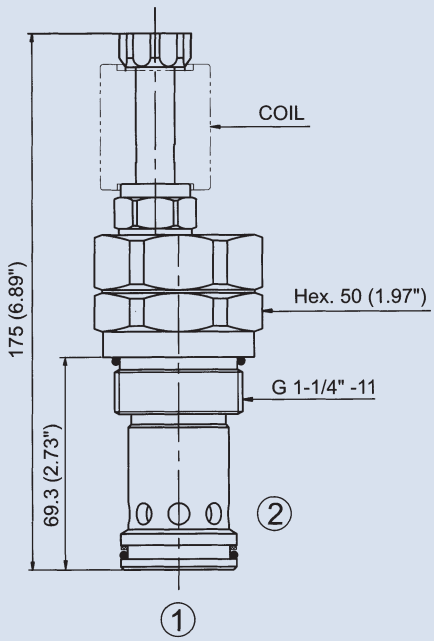

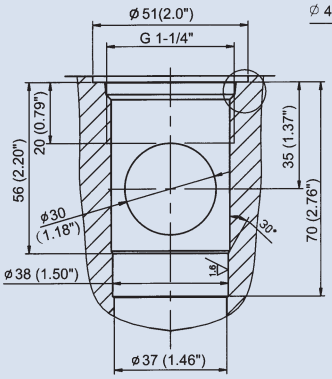

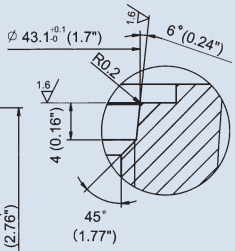

Unit: mm
(inch)

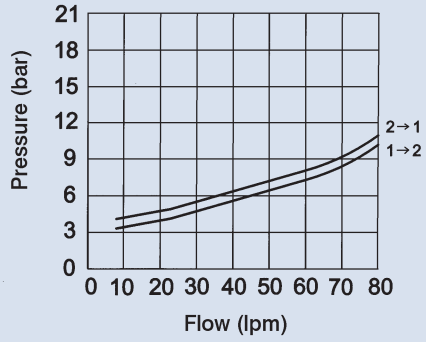

CARTRIDGE MANUAL RELEASE VALVE

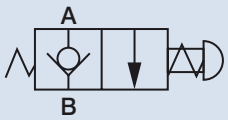

HV2069

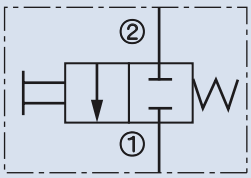

VMV-08

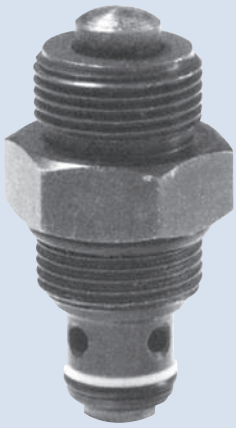

E

Specifications

Model	Max. Pressure (bar)	Rated Flow (lpm)	Max. Flow (lpm)	Weight (kg)
HV2069	250	15	20	0.17

Model	Max. Pressure (bar)	Rated Flow (lpm)	Weight (kg)
VMV-08	250	15	0.35

Dimensions / Performance curves

HV2069

Unit: mm (inch)

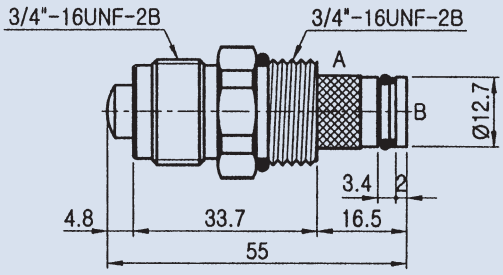

VMV-08

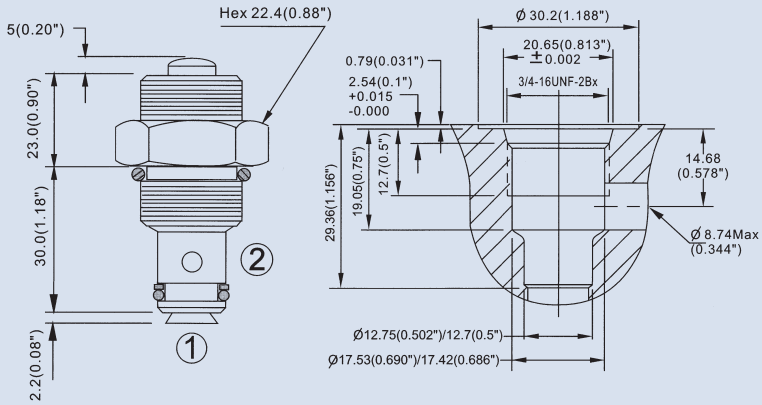

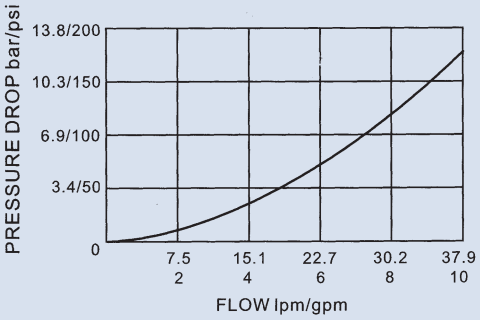

CARTRIDGE RELIEF VALVE

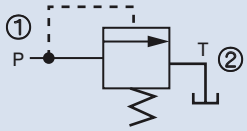

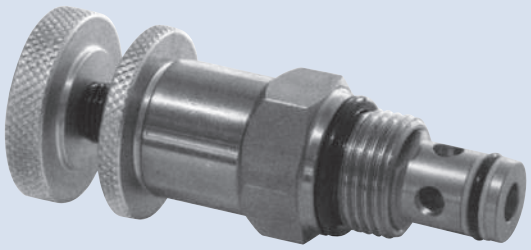

How to order

VNE - 04 - 20 - K
1 2 3 4

1	Model	Direct type
2	Mounting size	04, 05: Size 08 Cavity CS08-2N (see page 163)
3	Pressure adjusting range	
4	Adjustment option	None: Tool adjustment K: Hand-bar adjustment

Specifications

Model	Max. Pressure (bar)	Pressure Adjusting Range (bar)		Max. Flow (lpm)	Weight (kg)
VNE-03	315	28: 30~280	35: 80~350	60	0.18
VNE-04		03: ※~30 20: 30~200	10: ※~100 30: 40~300	20	0.1
VNE-05	250	10: ※~100 35: 100~350	20: 30~250	20	0.2
VNE-07	420	1: ※~100 3: ※~400	2: ※~250	60	1.8
VNE-08	315	1: ※~100	2: ※~315	120	1.8

Dimensions

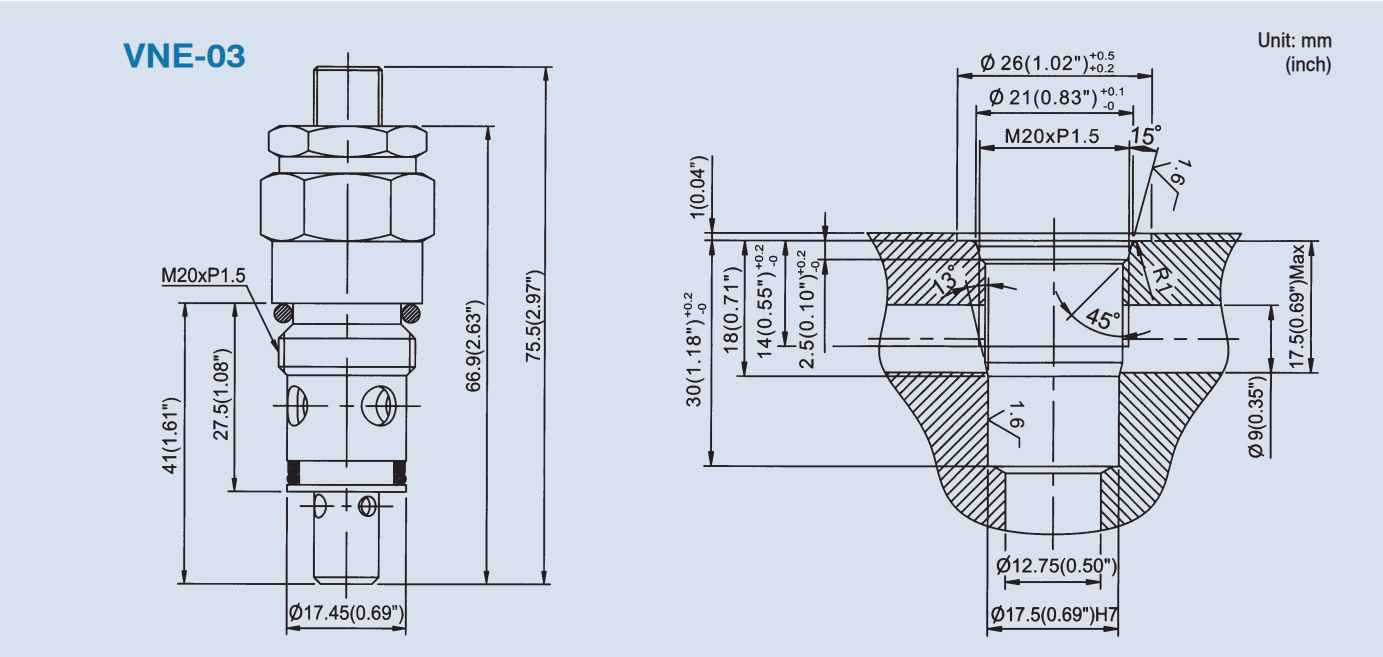

CARTRIDGE RELIEF VALVE

E

Dimensions

Unit: mm
(inch)

VNE-04

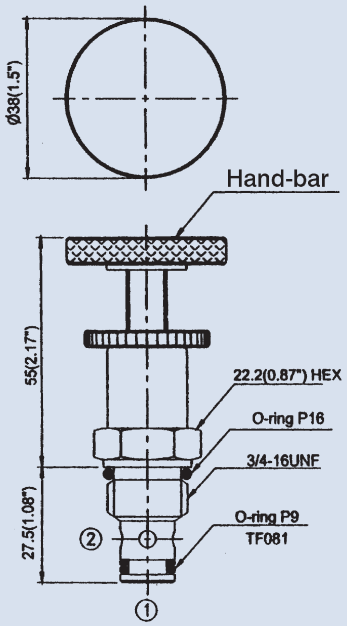

VNE-07

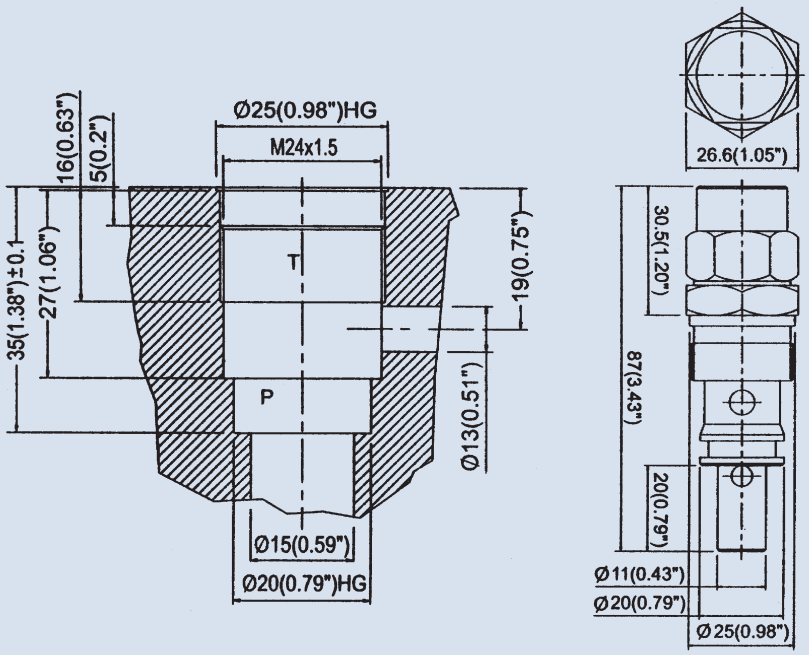

VNE-05

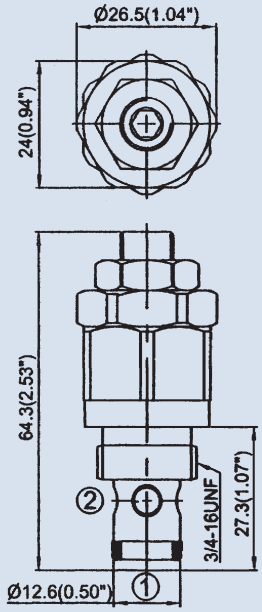

VNE-08

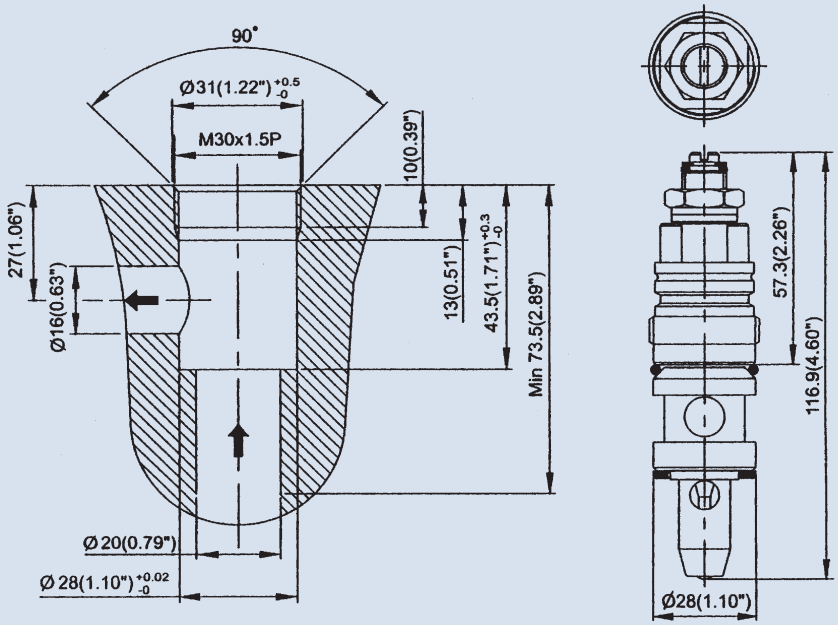

CARTRIDGE RELIEF VALVE

CONTROL PORTS

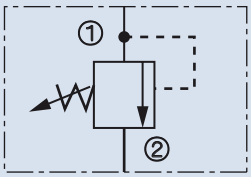

NO: 20, 26

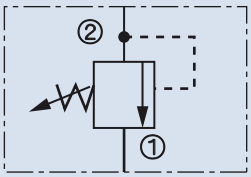

NO: 22

How to order

VRV - 10 - 24 - ※ - 20

1 2 3 4 5

1 Model Direct type: VRV-01-※-※-20, VRV-03 (04)-※-※-20, VRV-08-※-※-20 (22), VRV-10-※-※-20 (22)

2 Mounting size

Model	Size	Cavity	See Page
VRV-01	08	CS08-2N	163
VRV-03	E019	CSE019-2N	165
VRV-04	E019	CSE019-2N	165
VRV-08	08	CS08-2N	163

Model	Size	Cavity	See Page
VRV-10	10	CS10-2N	163
VRV-12	12	CS12-2N	163
VRV-16	16	CS16-2N	163

3 Pressure adjusting range

4 Adjustment option None: Tool adjustment K: Hand-bar adjustment

5 Control port 20, 22, 26

Specifications

Model	Max. Pressure (bar)	Pressure Adjusting Range (bar)		Max. Flow (lpm)	Weight (kg)
VRV-01-※-※-20	250	10: ※~100	20: ※~250	2	0.15
VRV-03-※-※-20	315	28: 30~280	38: 38~380	60	0.18
VRV-04-※-※-20	420	30: 150~300	40: 300~420	15	0.18
VRV-08-※-※-20	320	06: 4~60 24: 7~220	12: 7~120 31: 27~315	20	0.23
VRV-08-※-※-22				30	0.22
VRV-10-※-※-20	340	08: 10~80 24: 20~220	15: 17~150 34: 34~340	35	0.23
VRV-10-※-※-22				70	0.23
VRV-10-※-※-26		02: ※~25 24: 20~240	10: 10~100 34: 20~340	110	0.25
VRV-12-※-※-26				180	0.34
VRV-16-※-※-26				265	0.73

CARTRIDGE RELIEF VALVE

E

Dimensions

Unit: mm
(inch)

VRV-01

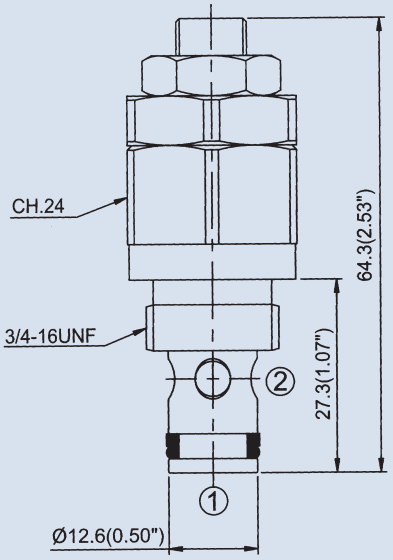

VRV-03

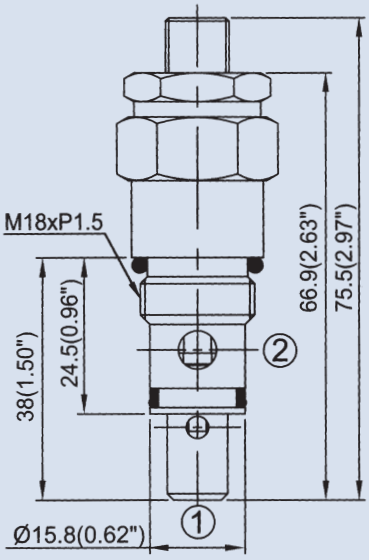

VRV-04

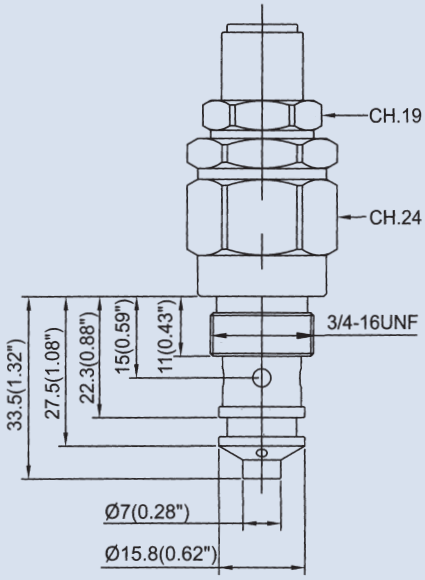

VRV-08

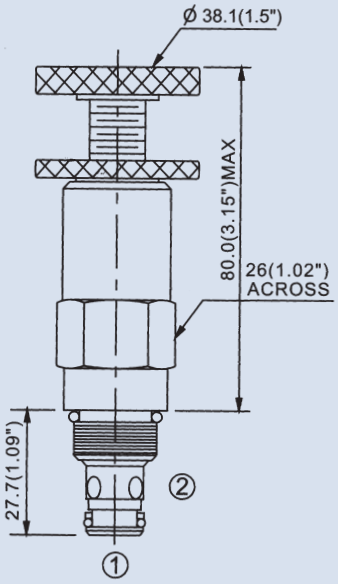

VRV-10

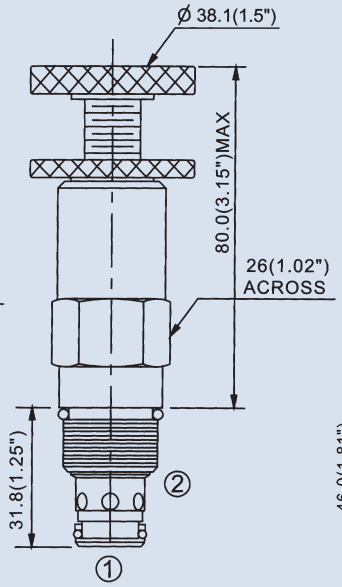

VRV-12

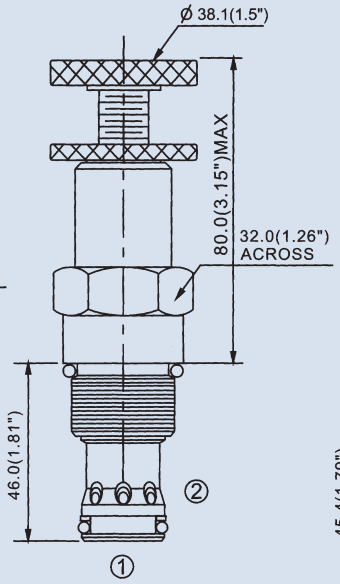

VRV-16

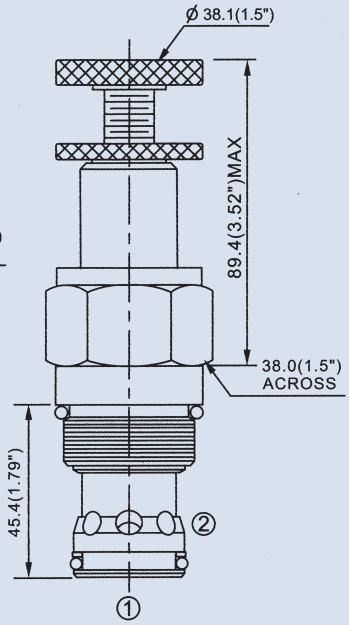

CARTRIDGE RELIEF VALVE

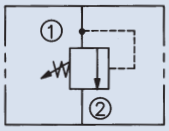

VRC

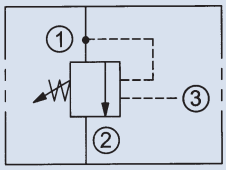

VRA

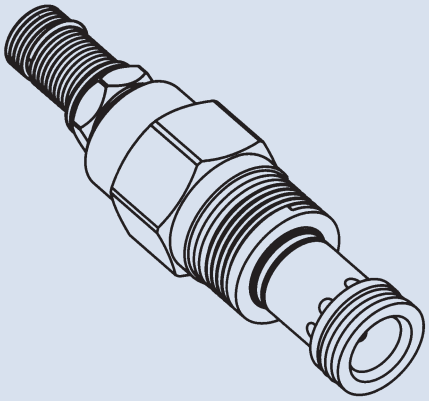

How to order

VRC
VRA - 02 - 20 - ※
1 2 3 4

1 Model VRA: Remote control included

2 Mounting size

Model	Size	Cavity	See Page
VRC-02	T-10A	CST-10A	166
VRC-03	T-3A	CST-3A	166
VRC-06	T-16A	CST-16A	167
VRC-10	T-18A	CST-18A	167

Model	Size	Cavity	See Page
VRA-02	T-11A	CST-11A	167
VRA-03	T-2A	CST-2A	166
VRA-06	T-17A	CST-17A	167
VRA-10	T-19A	CST-19A	167

3 Pressure adjusting range

4 Adjustment option None: Tool adjustment K: Hand-bar adjustment

Specifications

Model	Max. Pressure (bar)	Pressure Adjusting Range (bar)	Max. Flow (lpm)	Weight (kg)
VRC-02	420	06: ※~60 10: ※~100 20: 8~210 40: 12~420	100	0.15
VRC-03			200	0.27
VRC-06			380	0.55
VRC-10			760	0.9
VRA-02			60	0.18
VRA-03			120	0.3
VRA-06			240	0.7
VRA-10			480	1.1

Dimensions

Unit: mm
(inch)

VRC-02

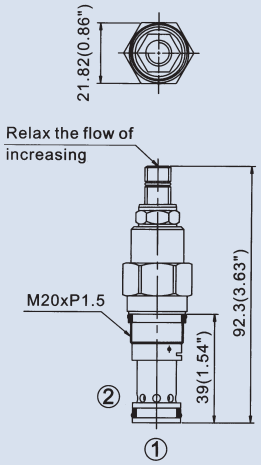

VRC-03

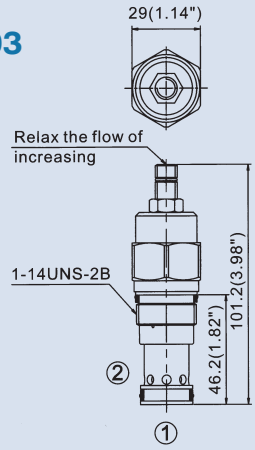

CARTRIDGE RELIEF VALVE

E

Dimensions

Unit: mm
(inch)

VRC-06

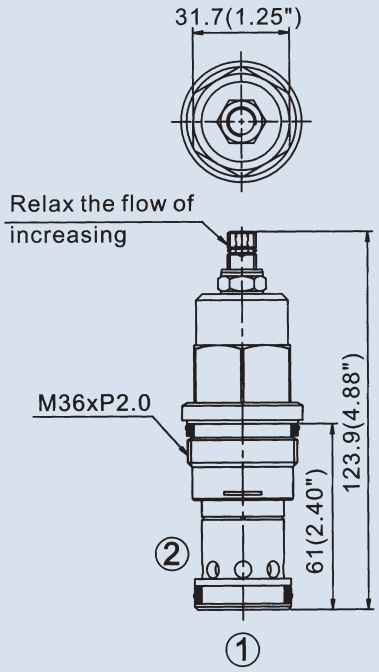

VRC-10

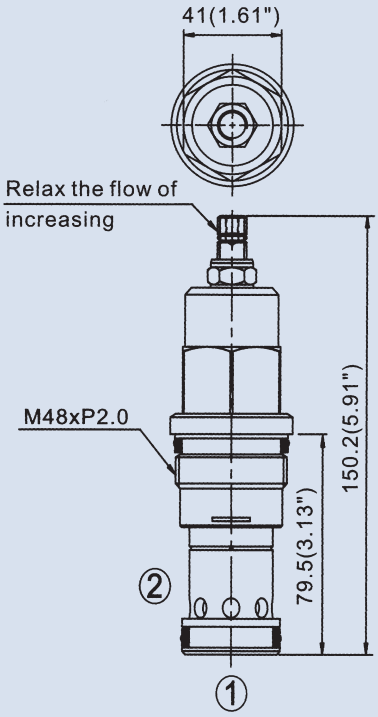

VRA-02

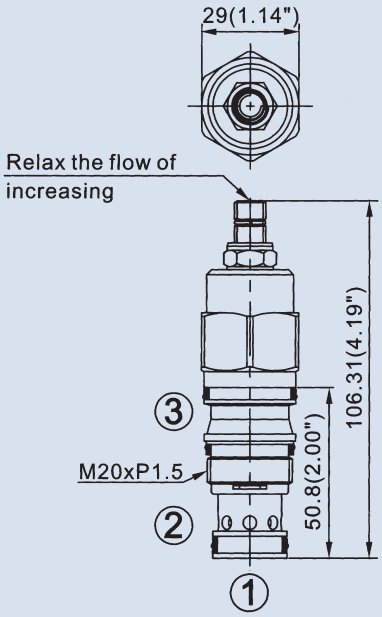

VRA-03

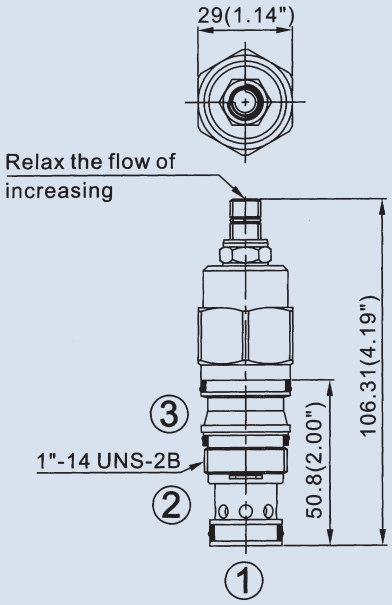

VRA-06

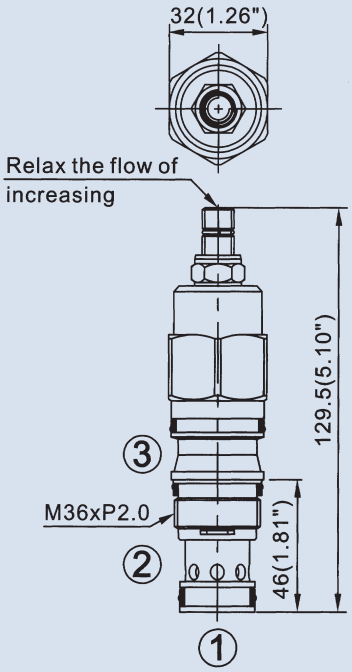

VRA-10

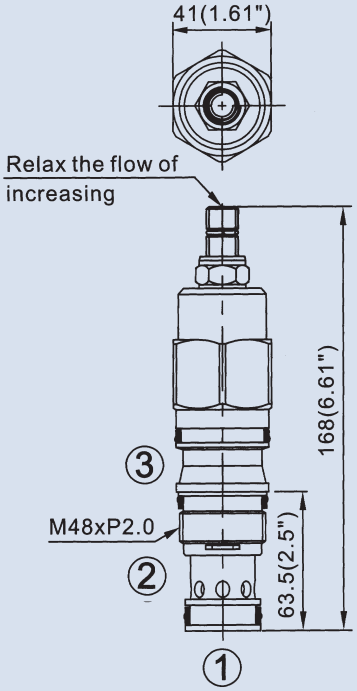

CARTRIDGE BRAKE VALVE

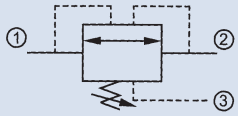

VDR-08

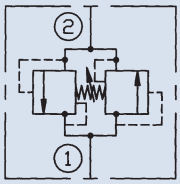

VDR-10

How to order

VRD - 08 - 09 - ※

1 2 3 4

1	Model
2	Mounting size 08: Size 08 Cavity: CS08-3N (see page 163) 10: Size 10 Cavity: CS10-2N (see page 163)
3	Pressure adjusting range
4	Adjustment option None: Tool adjustment K: Hand-bar adjustment

Specifications

Model	Max. Pressure (bar)	Pressure Adjusting Range (bar)	Max. Flow (lpm)	Weight (kg)
VRD-08	240	02: 4~20 04: 7~40 09: 11~89 16: 21~165	18	0.3
VRD-10	340	16: 14~168 20: 160~210	60	0.27

Dimensions/Performance curves

VRD-08

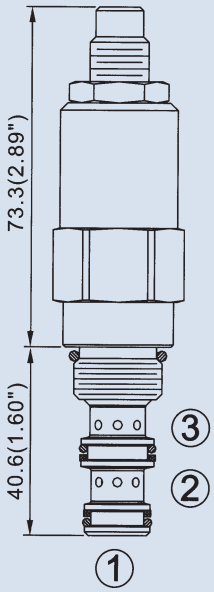

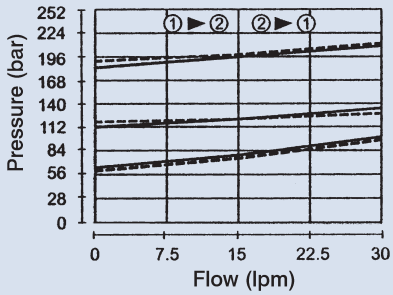

VRD-10

Test Conditions
Oil Temperature: 50 °C (122 °F)
Viscosity: 35 cSt (163 SSU)

Unit: mm (inch)

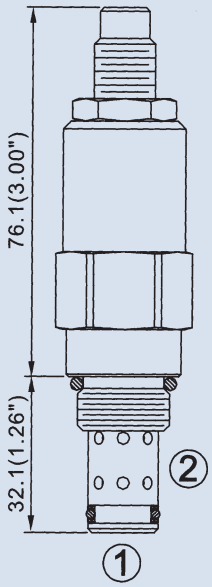

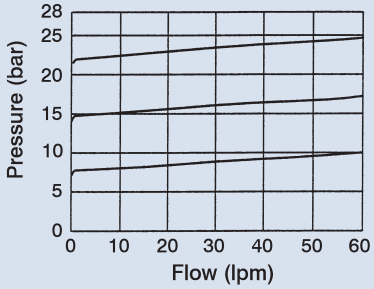

CARTRIDGE UNLOADING VALVE

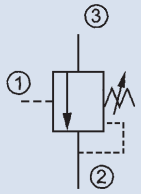

E

How to order

VSQ - 08 - 16 - ※

1 2 3 4

1	Model
2	Mounting size 08: Size 08 Cavity: CS08-3N (see page 163) 10: Size 10 Cavity: CS10-3N (see page 163)
3	Pressure adjusting range
4	Adjustment option None: Tool adjustment K: Hand-Bar adjustment

Specifications

Model	Max. Pressure (bar)	Pressure Adjusting Range (bar)	Max. Flow (lpm)	Weight (kg)
VSQ-08	350	02: 4~20 04: 7~40 09: 11~89 16: 21~165	18	0.3
VSQ-10		02: 6~27 04: 14~55 10: 21~103 14: 28~145	38	0.3

Dimensions / Performance curves

Unit: mm
(inch)

VSQ-08

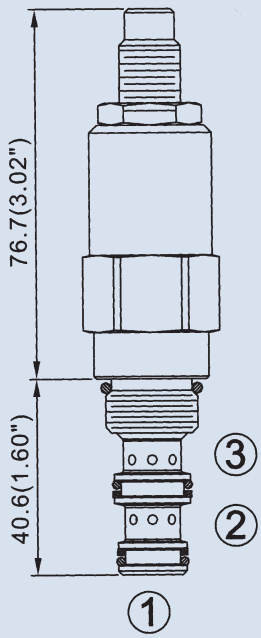

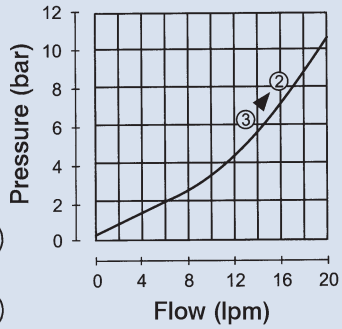

VSQ-10

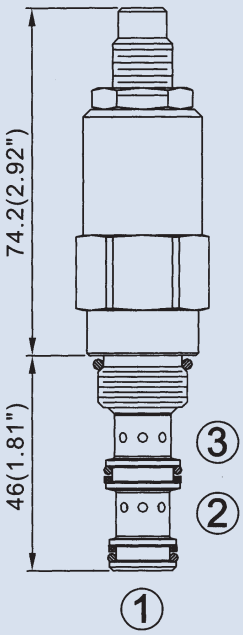

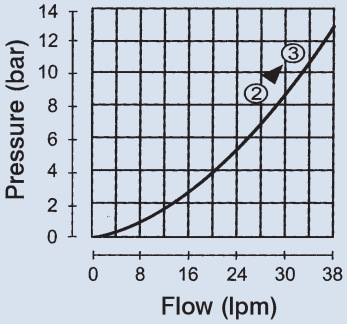

CARTRIDGE PRESSURE REDUCING VALVE

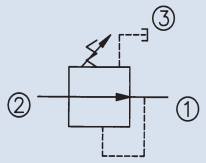

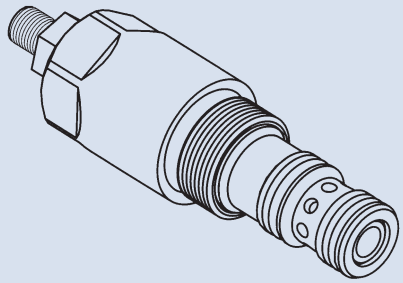

How to order

VBP
VBR - 10 - ※ - ※
1 2 3 4

1 Model

2 Mounting size

Model	Size	Cavity	See Page
VBP-10	10	CS10-3N	163
VBP-12	12	CS12-3N	164

Model	Size	Cavity	See Page
VBR-02	T-11A	CST-11A	167
VBR-03	T-2A	CST-2A	166
VBR-06	T-17A	CST-17A	167
VBR-10	T-19A	CST-19A	167

3 Pressure adjusting range

4 Adjustment option None: Tool adjustment K: Hand-bar adjustment

Specifications

Model	Max. Pressure (bar)	Pressure Adjusting Range (bar)		Max. Flow (lpm)	Weight (kg)
VBP-10	350	07: 6~70 28: 70~280	14: 10~140 35: 140~350	60	0.22
VBP-12				120	0.29
VBR-02		02: 4~20 09: 4~100	04: 4~60 20: 7~210	40	0.2
VBR-03				80	0.33
VBR-06				160	0.6
VBR-10		04: 4~60 20: 7~210	09: 4~100 31: 10~315	320	1.3

Dimensions

Unit: mm
(inch)

VBP-10

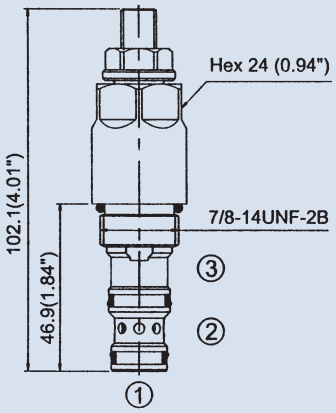

VBP-12

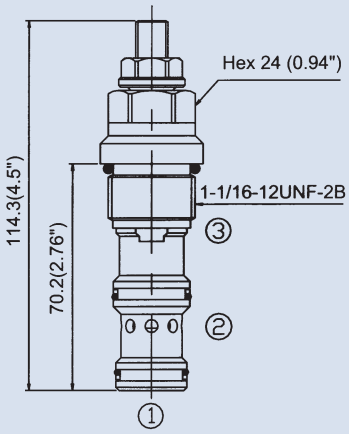

CARTRIDGE PRESSURE REDUCING VALVE

E

Dimensions

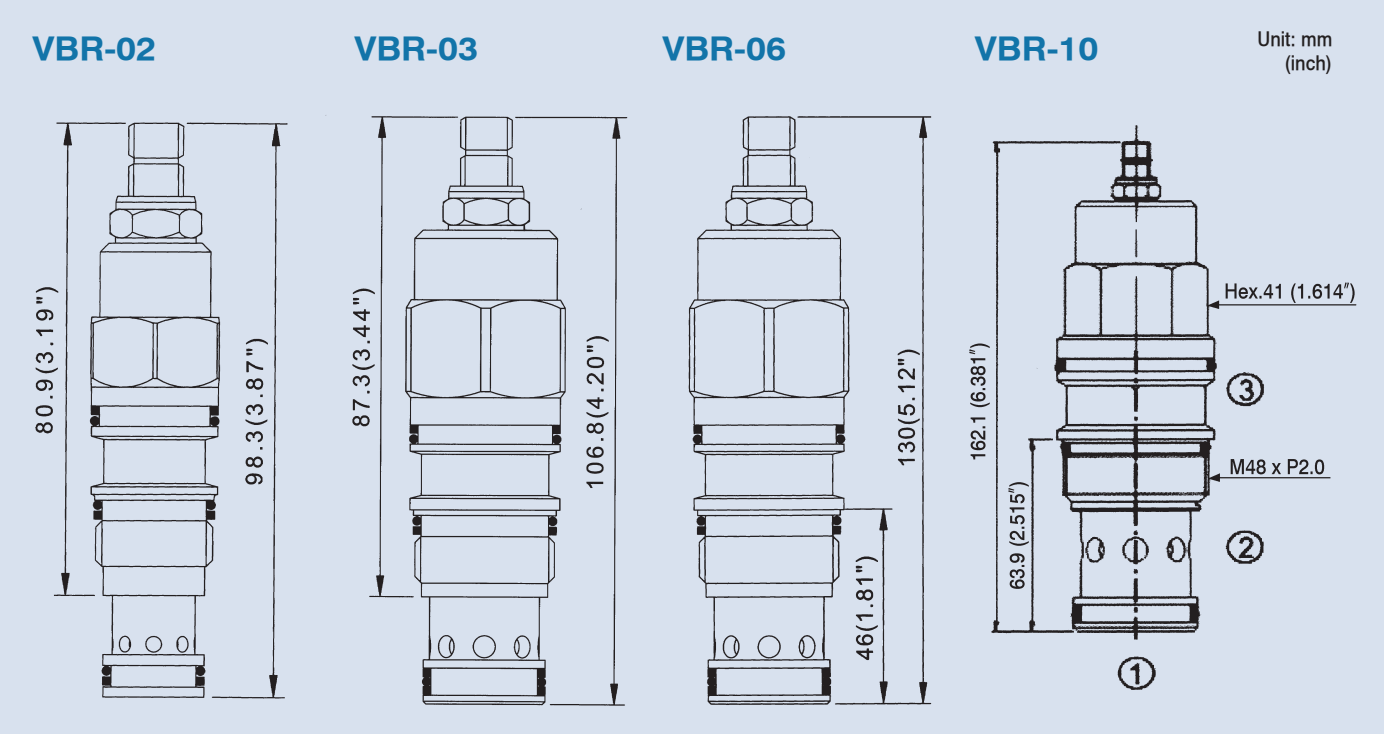

Performance curves

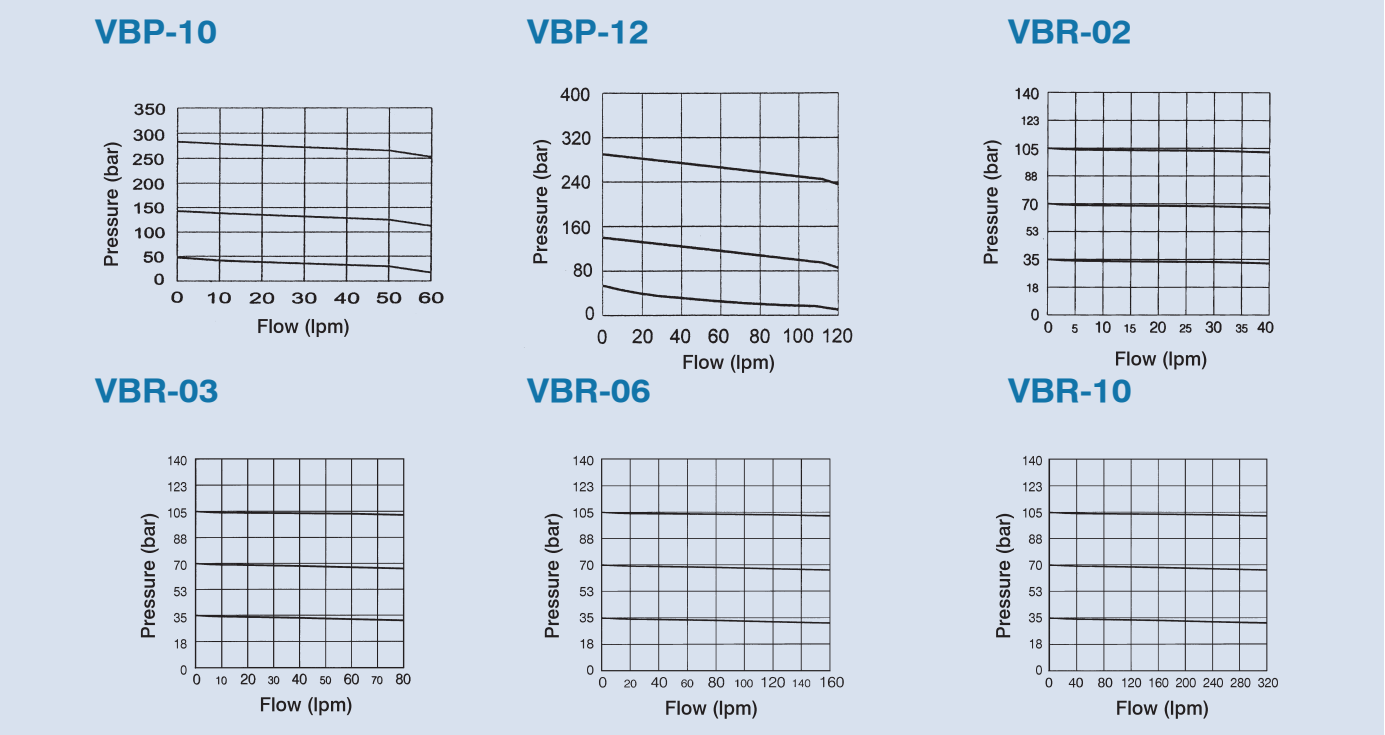

CARTRIDGE SEQUENCE VALVE

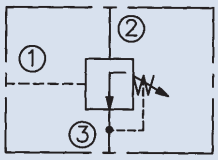

E

How to order

VS - 08 - 16 - ※

1 2 3 4

1	Model
2	Mounting size 08: Size 08 Cavity: CS08-3N (see page 163) 10: Size 10 Cavity: CS10-3N (see page 163)
3	Pressure adjusting range
4	Adjustment option None: Tool adjustment K: Hand-bar adjustment

Specifications

Model	Max. Pressure (bar)	Pressure Adjusting Range (bar)	Max. Flow (lpm)	Weight (kg)
VS-08	240	02: 4~20 04: 7~40 09: 11~89 16: 21~165	18	0.3
VS-10			37	0.35

Dimensions/Performance curves

Unit: mm
(inch)

VS-08

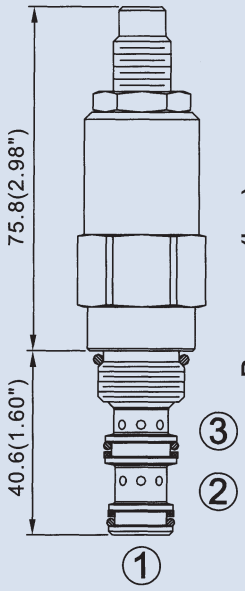

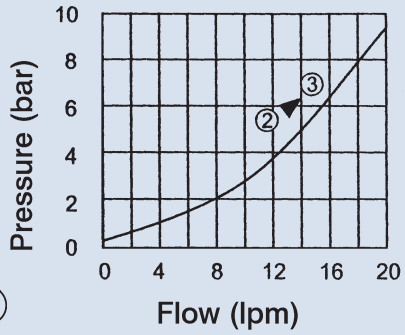

VS-10

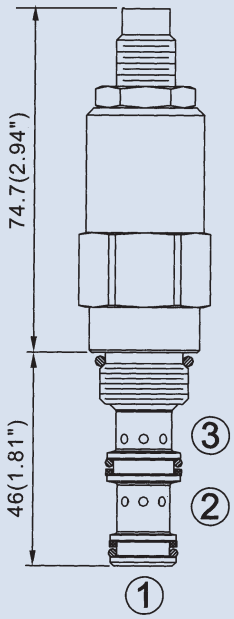

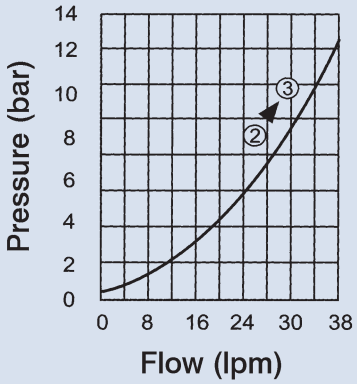

CARTRIDGE COUNTERBALANCE VALVE

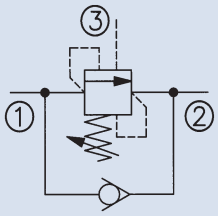

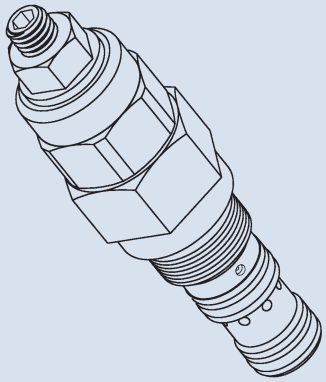

E

How to order

VCQ - 08 - 20 - ※ - 4A

1 2 3 4 5

1 Model

2 Mounting size

Model	Size	Cavity	See Page
VCQ-08	08	CS08-3S	164
VCQ-08N	08	CS08-3N	163
VCQ-10	10	CS10-3S	165

Model	Size	Cavity	See Page
VCQ-12	12	CS12-3S	165
VCQ-16	16	CS16-3S	165
VCQ-20	20	CS20-3S	165

3 Pressure adjusting range

Model	Pilot Ratio	Code	Pressure Adjusting Range (bar)
VCQ-08 VCQ-08N	4: 1	20	100~210
		35	200~350
VCQ-10	3: 1 8: 1	20	70~210
		35	140~350

Model	Pilot Ratio	Code	Pressure Adjusting Range (bar)
VCQ-12	4: 1 8: 1	20	70~210
		35	140~350
VCQ-16 VCQ-20	4: 1 8: 1	20	70~210
		35	140~350
		40	140~420

4 Adjustment option None: Tool adjustment K: Hand-bar adjustment

5 Pilot ratio 3A: 3:1 4A: 4:1 8A: 8:1

Specifications

Model	Max. Pressure (bar)	Pressure Adj. Range (bar)	Pilot Ratio	Max. Flow (lpm)	Weight (kg)
VCQ-08	350	20: 100~210 35: 200~350	4: 1	30	0.19
VCQ-08N					
VCQ-10		20: 70~210 35: 140~350	3: 1 8: 1	60	0.22
VCQ-12			4: 1 8: 1	120	0.38
VCQ-16	420	20: 70~210 35: 140~350 40: 140~420	4: 1 8: 1	200	0.6
VCQ-20				320	0.87

CARTRIDGE COUNTERBALANCE VALVE

Dimensions

Unit: mm
(inch)

VCQ-08

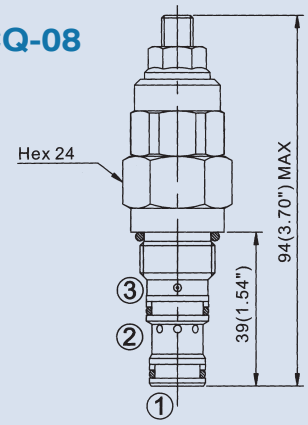

VCQ-08N

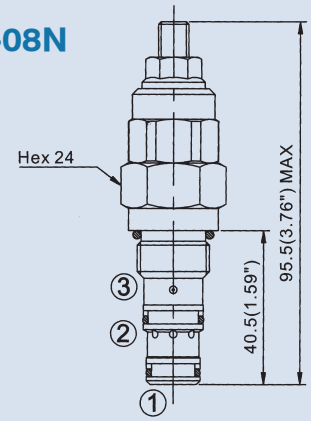

VCQ-10

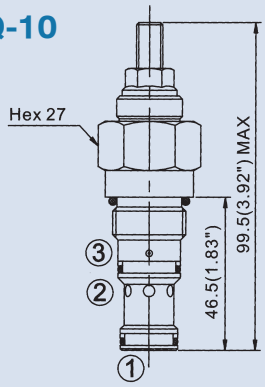

VCQ-12

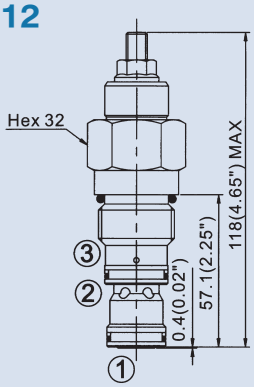

VCQ-16

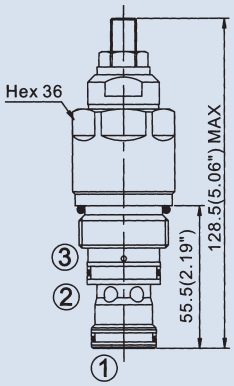

VCQ-20

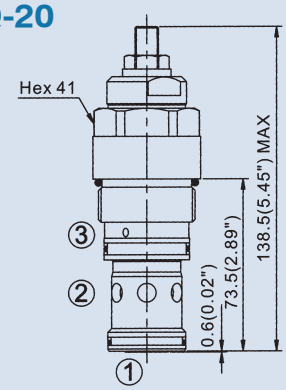

Performance curves

VCQ-08

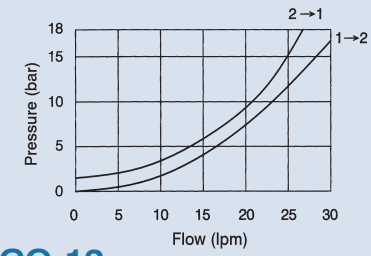

VCQ-08N

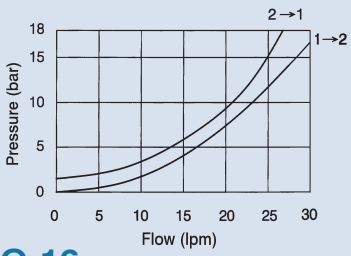

VCQ-10

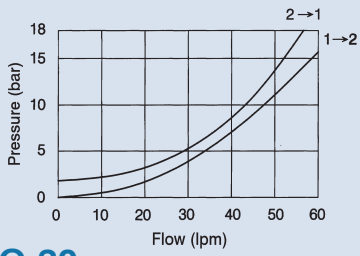

VCQ-12

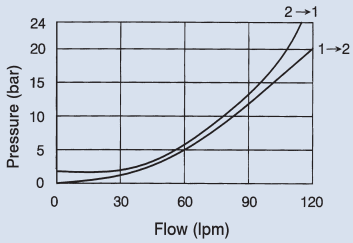

VCQ-16

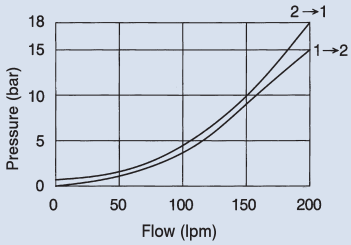

VCQ-20

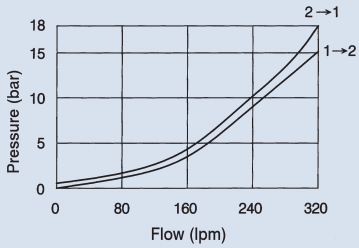

CARTRIDGE COUNTERBALANCE VALVE

CONTROL PORT

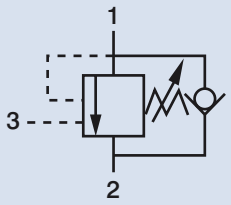

E

How to order

VCB - 02 - 28 - 3A

1 2 3 4

1 Model VCB: Overcentre valve pilot assisted relief with check

2 Mounting size

Model	Size	Cavity	See Page
VCB-02	T-11A	CST-11A	167
VCB-03	T-2A	CST-2A	166
VCB-06	T-17A	CST-17A	167
VCB-10	T-19A	CST-19A	167

3 Pressure adjusting range

Check Spring Pressure 1.8 bar

Pilot Ratio	Code	Pressure Adjusting Range (bar)
3: 1	10	30~105
	28	70~280
4.5: 1 10: 1	17	70~175
	35	140~350

Check Spring Pressure 0.3 bar

Pilot Ratio	Code	Pressure Adjusting Range (bar)
3: 1	25	25~105
	70	70~280
4.5: 1 10: 1	80	70~175
	14	140~350

4 Pilot ratio 3A: 3:1 4A: 4.5:1 10A: 10:1

Specifications

Model	Max. Pressure (bar)	Pressure Adj. Range (bar)		Pilot Ratio	Max. Flow (lpm)	Weight (kg)
VCB-02	350	10: 30~105	14: 140~350	3: 1 4.5: 1 10: 1	60	0.2
VCB-03		17: 70~175	25: 25~105		120	0.3
VCB-06		28: 70~280	35: 140~350		240	0.61
VCB-10		70: 70~280	80: 70~175		480	1.6

Performance curves

VCB-02

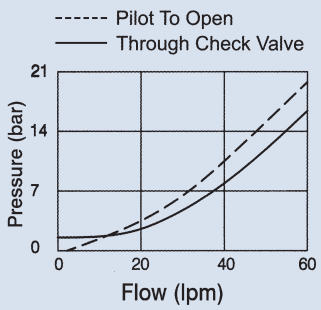

VCB-03

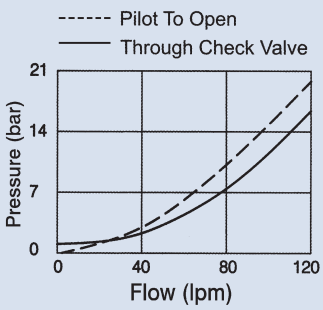

VCB-06

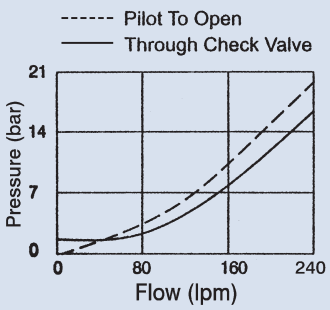

VCB-10

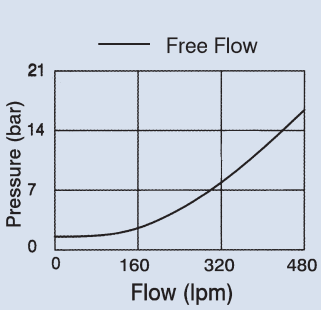

CARTRIDGE COUNTERBALANCE VALVE

Dimensions

Unit: mm
(inch)

VCB-02

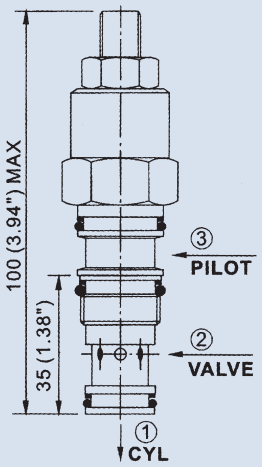

VCB-03

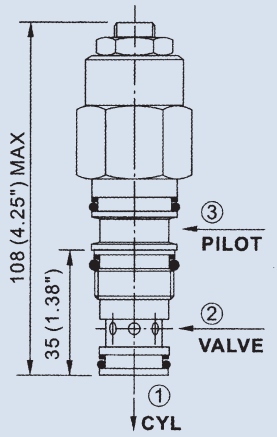

VCB-06

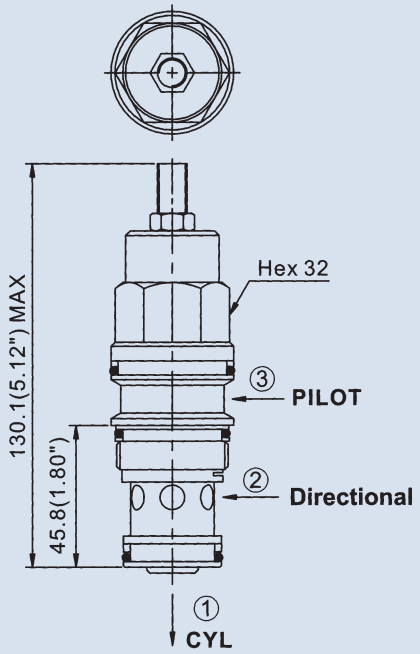

VCB-10

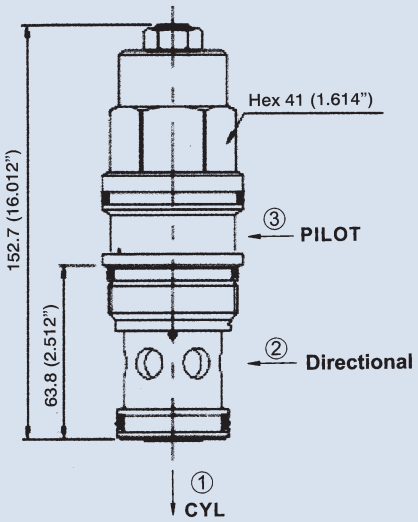

CARTRIDGE COUNTERBALANCE VALVE WITH BODY

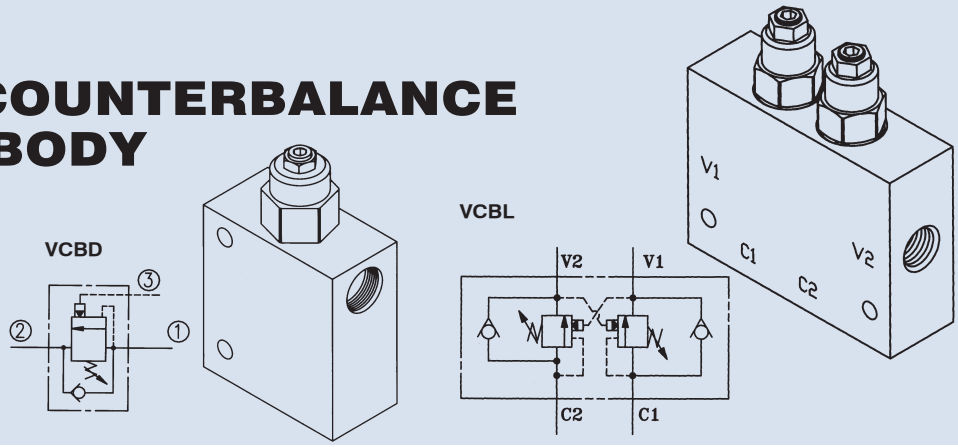

E

How to order

VCBD
VCBL - 02 - 28 - A - 1P - 3A - AL
1 2 3 4 5 6 7

1	Model	VCBD: Single valve VCBL: Double valve
2	Valve size (see model VCB)	
3	Pressure adjusting range	

Check Spring Pressure 1.8 bar

Pilot Ratio	Code	Pressure Adjusting Range (bar)
3: 1	10	30~105
	28	70~280
4.5: 1	17	70~175
10: 1	35	140~350

Check Spring Pressure 0.3 bar

Pilot Ratio	Code	Pressure Adjusting Range (bar)
3: 1	25	25~105
	70	70~280
4.5: 1	80	70~175
10: 1	14	140~350

4	Port size	VCBD-02 A: 1/4, B: 3/8 VCBD-03 A: 3/8, B: 1/2 VCBD-06 A: 3/4, B: 1 VCBL-02 A: 3/8, B: 1/2 VCBL-03 A: 3/4, B: 1/2 VCBL-06 A: 1, B: 3/4
5	Port thread	1P: PT 2N: NPT 3G: PF (G) 4A: SAE
6	Pilot ratio	3A: 3:1 4A: 4.5:1 10A: 10:1
7	Body material	AL: Aluminum (normal) S: Steel

Specifications

Model	Max. Pressure (bar)		Adjusting Pressure Range (bar)	Pilot Ratio	Max. Flow (lpm)	Weight (kg)	
	Aluminum Body	Steel Body				Aluminum Body	Steel Body
VCBD-02-※-AL (S)	240	350	10: 30~105 14: 140~350 17: 70~175 25: 25~105 28: 70~280 35: 140~350 70: 70~280 80: 70~175	3: 1 4.5: 1 10: 1	60	0.63	1.35
VCBD-03-※-AL (S)					120	0.93	2.1
VCBD-06-※-AL (S)					240	2.37	5.32
VCBL-02-※-AL (S)					60	1.09	2.2
VCBL-03-※-AL (S)					120	1.61	3
VCBL-06※-AL (S)					240	3.91	7.3

CARTRIDGE COUNTERBALANCE VALVE WITH BODY

Dimensions

Unit: mm
(inch)

VCBD-02

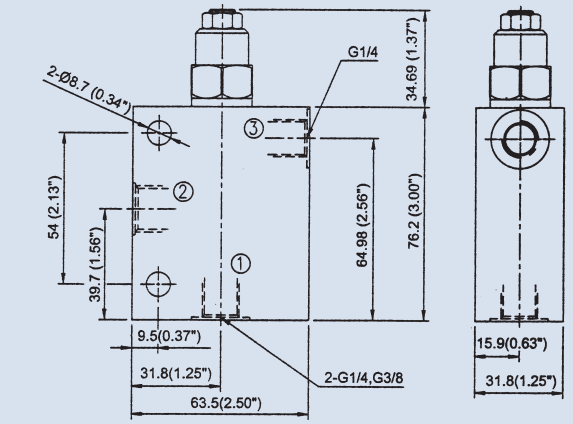

VCBL-02

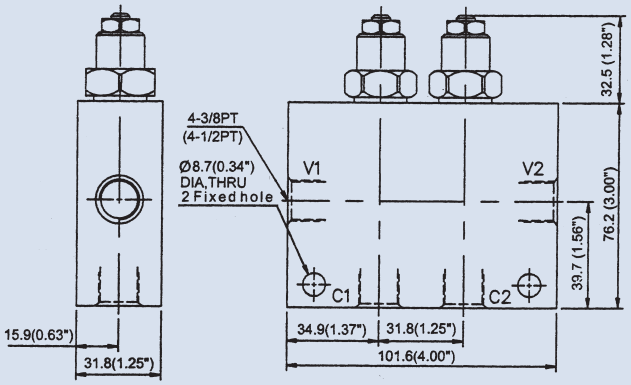

VCBD-03

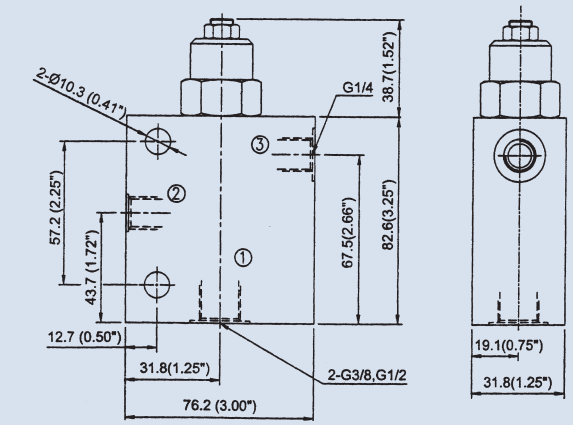

VCBL-03

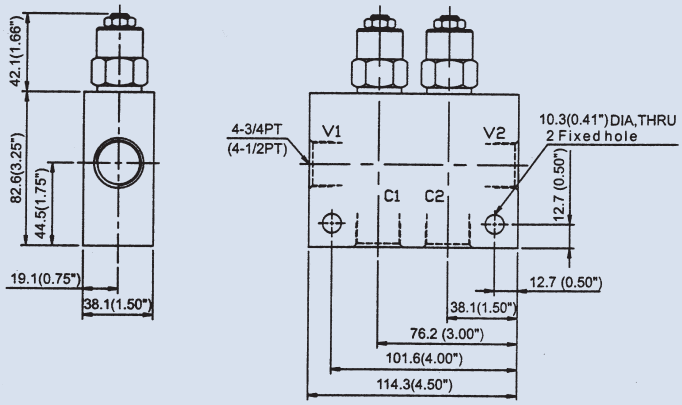

VCBD-06

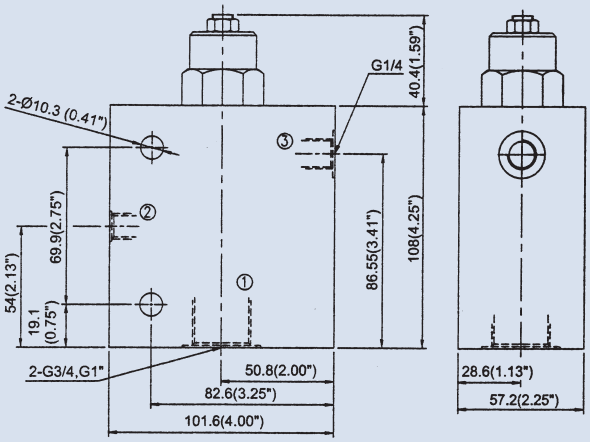

VCBL-06

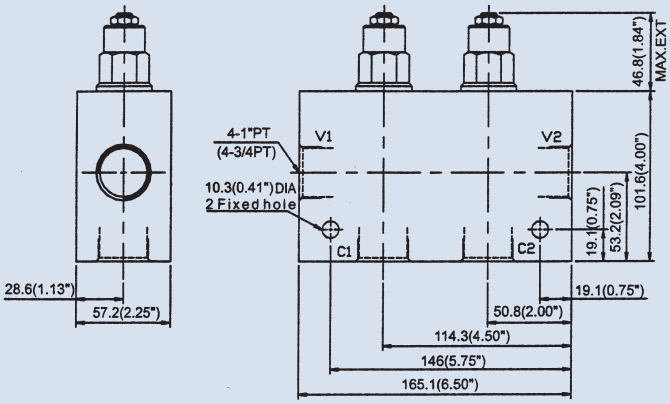

CARTRIDGE BALANCE VALVE

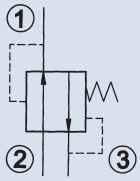

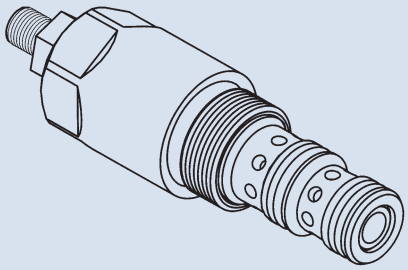

E

How to order

VGR - 10 - 28 - ※

1 2 3 4

1	Model
2	Mounting size 10: Size 10 Cavity: CS10-3N (see page 163) 12: Size 12 Cavity: CS12-3N (see page 164)
3	Pressure adjusting range
4	Adjustment option None: Tool adjustment K: Hand-bar adjustment

Specifications

Model	Max. Pressure (bar)	Pressure Adjusting Range (bar)	Max. Flow (lpm)	Weight (kg)
VGR-10	350	07: 6~70 14: 10~140	60	0.22
VGR-12		28: 70~280 35: 140~350	120	0.29

Dimensions / Performance curves

Unit: mm
(inch)

VGR-10

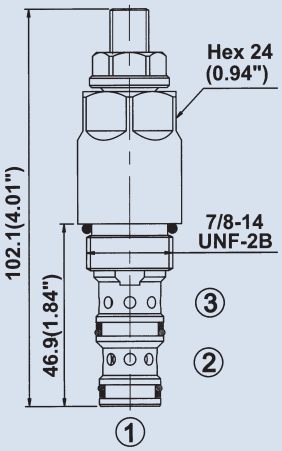

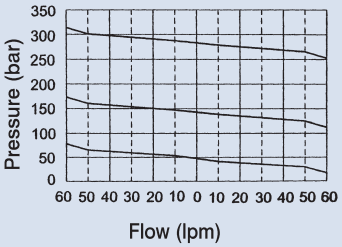

VGR-12

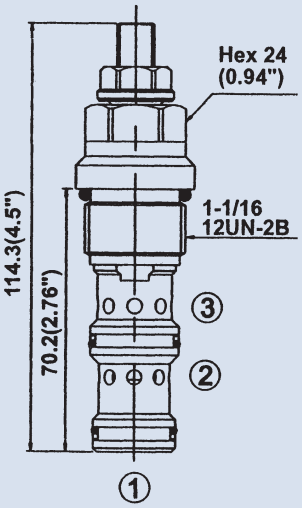

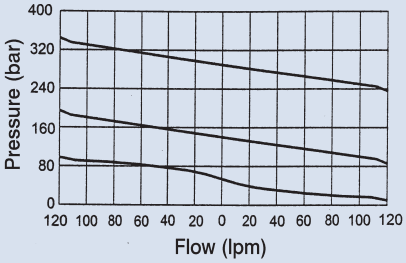

CARTRIDGE CHECK, PILOT TO OPEN

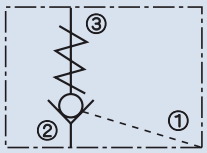

How to order

VPN - 08 - 30
1 2 3

1	Model				
2	Mounting size	08: Size 08	Cavity CS08-3N (see page 163)	10: Size 10	Cavity CS10-3N (see page 163)
3	Design no				

Specifications

Model	Max. Pressure (bar)	Flow (lpm)	Weight (kg)
VPN-08	250	23	0.1
VPN-10		25	0.1

Dimensions / Performance curves

Unit: mm (inch)

VPN-08

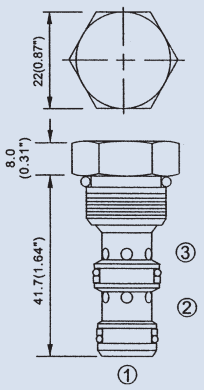

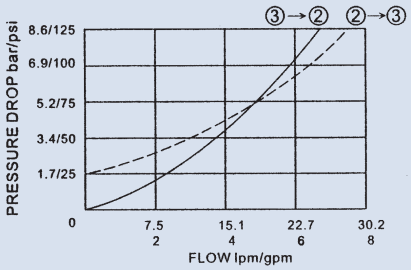

VPN-10

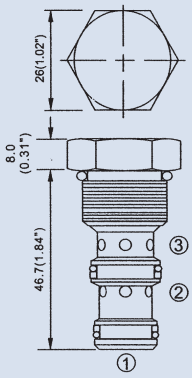

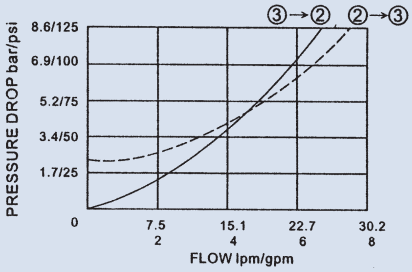

CARTRIDGE CHECK, PILOT TO OPEN

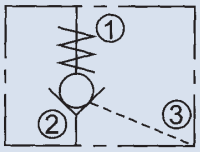

E

How to order

VCK - 03
1 2

1	Model								
2	Mounting size	Model	Size	Cavity	See Page	Model	Size	Cavity	See Page
		VCK-02	T-11A	CST-11A	167	VCK-06	T-17A	CST-17A	167
		VCK-03	T-2A	CST-2A	166	VCK-10	T-19A	CST-19A	167

Specifications

Model	Max. Pressure (bar)	Max. Flow (lpm)	Weight (kg)
VCK-02	315	60	0.13
VCK-03		120	0.23
VCK-06	350	200	0.53
VCK-10		460	1.18

Dimensions

Unit: mm (inch)

Model	A	B	C
VCK-02	65 (2.56")	22 (0.87")	-
VCK-03	70 (2.76")	29 (1.14")	-
VCK-06	91.8 (3.61")	34 (1.34")	27.8 (1.09")
VCK-10	121.7 (4.79")	42 (1.65")	39.7 (1.56")

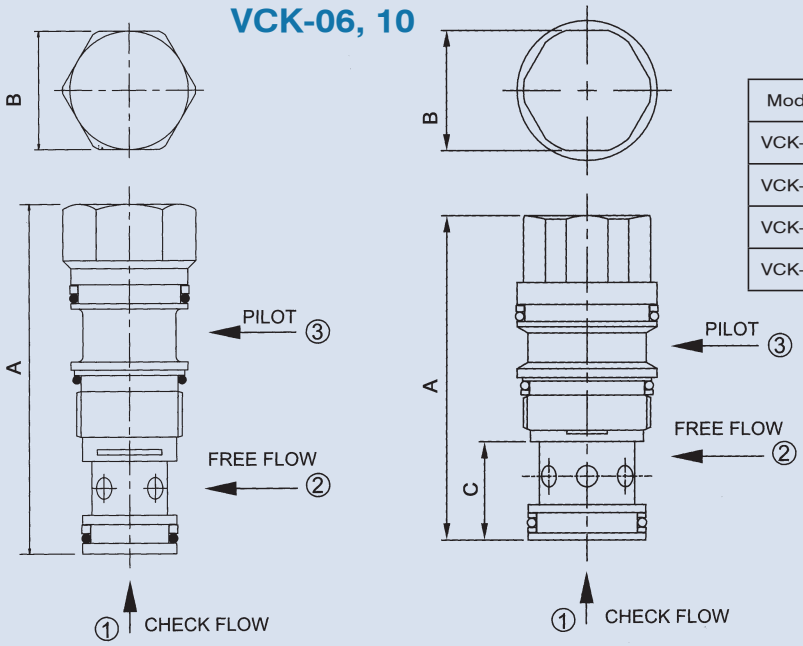

CARTRIDGE CHECK, PILOT TO OPEN WITH BODY

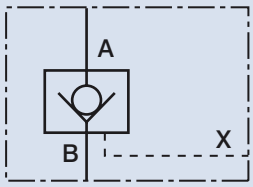

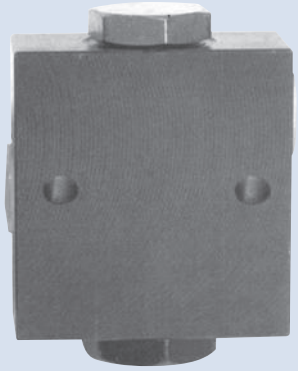

How to order

VPC - 10 - ※ - 10

1 2 3 4

1	Model
2	Port size 10: 1/2" 16: 1"
3	Port thread 1: PT 2: NPT 3: SAE 4: BSP
4	Design no

Specifications

Model	Max. Pressure (bar)	Flow (lpm)	Weight (kg)
VPC-10	350	70	2.2
VPC-16		150	5.8

Dimensions / Performance curves

Unit: mm (inch)

VPC-10

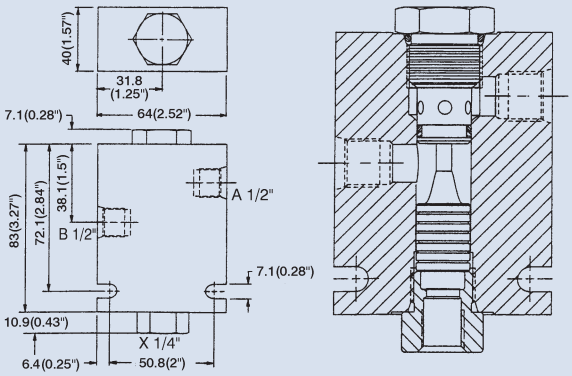

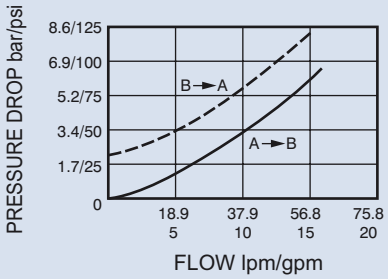

VPC-16

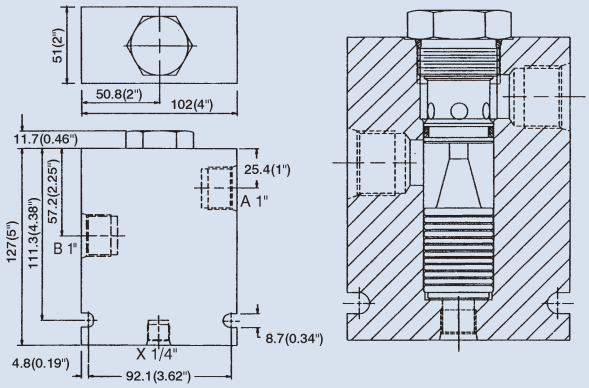

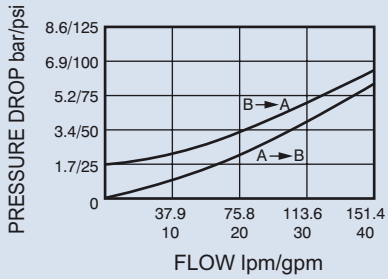

CARTRIDGE DOUBLE PILOT OPERATED CHECK VALVE WITH BODY

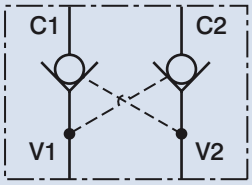

E

How to order

VPCL - 08 - ※

1 2 3

1	Model
2	Port size 08: 3/8" 10: 1/2" 12: 3/4"
3	Port thread 1: PT 2: NPT 3: SAE 4: BSP

Specifications

Model	Max. Pressure (bar)	Flow (lpm)	Weight (kg)
VPCL-08	350	30	2.5
VPCL-10		75	3.0
VPCL-12		95	7.5

Dimensions / Performance curves

Unit: mm (inch)

VPCL-08

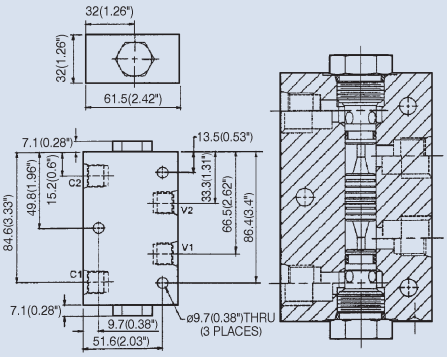

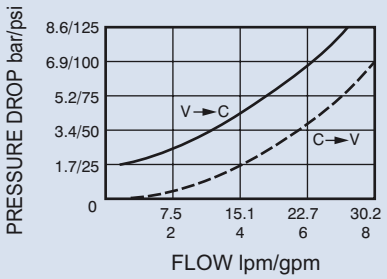

VPCL-10

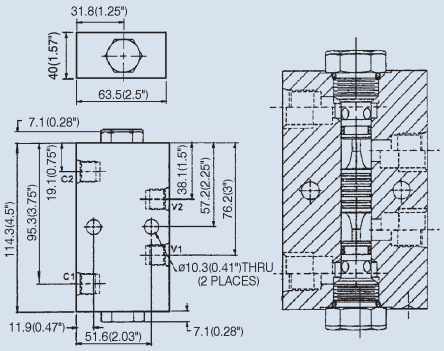

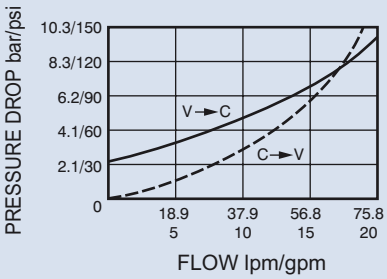

VPCL-12

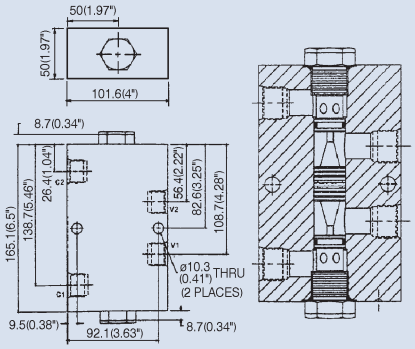

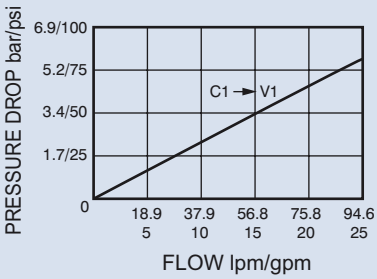

CARTRIDGE CHECK VALVE

How to order

VCV - 08 - 05 - 10
1 2 3 4

1 Model

2 Mounting size

Model	Size	Cavity	See Page
VCV-08	08	CS08-2N	163
VCV-10	10	CS10-2N	163
VCV-12	12	CS12-2N	163
VCV-16	16	CS16-2N	163
VCV-42	42	CS42-2N	163

3 Cracking pressure

Model	Cracking Pressure	
VCV-08-※-10	0.5: 0.5 bar	50: 4 bar
VCV-10-※-10	0.5: 0.3 bar	50: 4 bar
VCV-12-※-10	0.5: 0.5 bar	50: 4 bar
VCV-16-※-10	0.5: 0.35 bar	50: 4 bar
VCV-42-※-10	0.5: 0.35 bar	50: 4 bar

Model	Cracking Pressure	
VCV-08-※-21	20: 2 bar	
VCV-10-※-21	0.5: 0.3 bar 50: 3.9 bar	20: 1.7 bar
VCV-12-※-21	0.5: 0.5 bar 50: 3.8 bar	20: 1.8 bar

4 Control port

10 :

21 :

Specifications

Model	Max. Pressure (bar)	Flow (lpm)	Weight (kg)
VCV-08-※-10	350	30	0.06
VCV-10-※-10		75	0.08
VCV-12-※-10		94	0.18
VCV-16-※-10		150	0.26
VCV-42-※-10		380	0.43
VCV-08-※-21	250	30	0.06
VCV-10-※-21		50	0.1
VCV-12-※-21		100	0.2

Dimensions

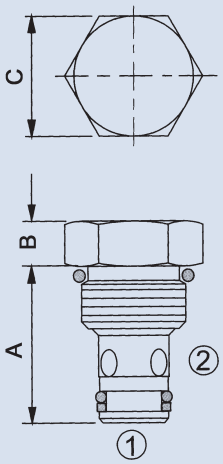

Model	A	B	C
VCV-08-※-10	27.7 (1.09")	8 (0.31")	22 (0.87")
VCV-10-※-10	31.8 (1.25")	8 (0.31")	26 (1.02")
VCV-12-※-10	46 (1.81")	10 (0.39")	32 (1.26")
VCV-16-※-10	44.5 (1.75")	13 (0.51")	38 (1.5")
VCV-42-※-10	55.6 (2.19")	20.3 (0.83")	48 (1.89")
VCV-08-※-21	27.7 (1.09")	8 (0.31")	22.4 (0.88")

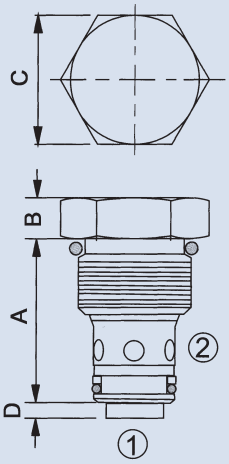

Unit: mm
(inch)

Model	A	B	C	D
VCV-10-※-21	34.5 (1.36")	8 (0.31")	26 (1.02")	2.3 (0.9)
VCV-12-※-21	48 (1.89")	10 (0.39")	32 (1.26")	4 (0.16")

CARTRIDGE CHECK VALVE

E

How to order

VCX
VCXE - 02 - 05
1 2 3

1 Model VCX

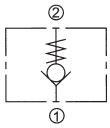

VCXE

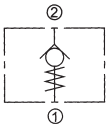

2 Mounting size

Model	Size	Cavity	See Page
VCX (VCXE)-02	T-13A	CST-13A	167
VCX (VCXE)-03	T-5A	CST-5A	166

Model	Size	Cavity	See Page
VCX (VCXE)-06	T-16A	CST-16A	167
VCX (VCXE)-10	T-18A	CST-18A	167

3 Cracking pressure 0.5: 0.35 bar 50: 5 bar

Specifications

Model	Max. Pressure (bar)	Flow (lpm)	Weight (kg)
VCX-02	350	80	0.15
VCX-03		140	0.19
VCX-06		320	0.63
VCX-10		640	1.3
VCXE-02		60	0.15
VCXE-03		100	0.19
VCXE-06		210	0.63
VCXE-10		420	1.3

Dimensions

VCX

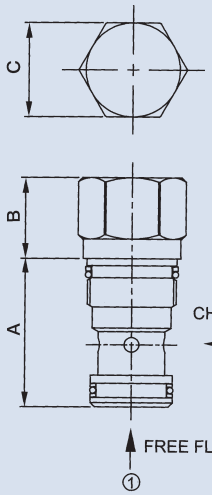

VCXE

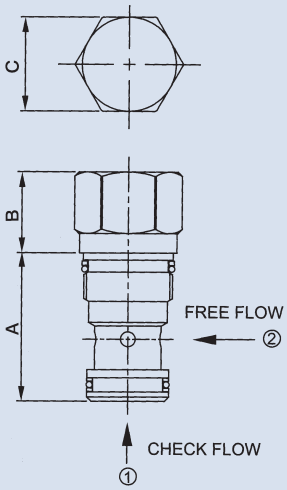

Unit: mm
(inch)

Model	A	B	C
VCX-02	34.9 (1.37")	19.1 (0.75")	22.2 (0.87")
VCX-03	41.3 (1.63")	17.5 (0.69")	28.6 (1.13")
VCX-06	61.9 (2.44")	24.6 (0.97")	31.8 (1.25")
VCX-10	79.5 (3.13")	30.2 (1.19")	41 (1.61")
VCXE-02	34.9 (1.37")	19.1 (0.75")	22.2 (0.87")
VCXE-03	41.3 (1.63")	17.5 (0.69")	28.6 (1.13")
VCXE-06	61.9 (2.44")	24.6 (0.97")	31.8 (1.25")
VCXE-10	79.5 (3.13")	30.2 (1.19")	41 (1.61")

CARTRIDGE FLOW CONTROL VALVE

Control Port

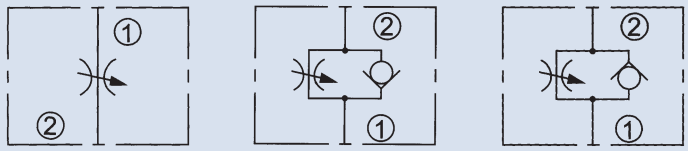

VTV-※-※ VTC-※-※-20 VTC-※-※-22

E

How to order

VTV / VTC - 08 - ※ - ※

1 2 3 4

1	Model	VTV: Without check	VTC: With check		
2	Mounting size	Model	Size	Cavity	See Page
		VTV (VTC)-08	08	CS08-2N	163
		VTV (VTC)-10	10	CS10-2N	163
		VTV (VTC)-12	12	CS12-2N	163
3	Adjustment option	None: Tool adjustment	K: Hand-bar adjustment		
4	Control port	20, 22: For model VTC only			

Specifications

Model	Max. Pressure (bar)	Max. Flow (lpm)	Weight (kg)
VTV-08	350	45	0.13
VTV-10		56	0.18
VTV-12		128	0.32
VTC-08-※-20		45	0.14
VTC-10-※-20	240	45	0.17
VTC-10-※-22		57	0.17
VTC-12-※-20		130	0.2

Dimensions

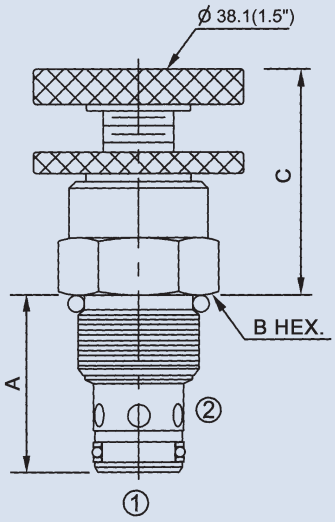

Unit: mm (inch)

Model	A	B	C
VTV-08	27.7 (1.09")	22 (0.87")	40 (1.57")
VTV-10	31.8 (1.25")	25 (0.98")	40 (1.57")
VTV-12	46 (1.81")	32 (1.26")	49 (1.93")
VTC-08-※-20	27.7 (1.09")	22 (0.87")	40 (1.57")
VTC-10-※-20	31.8 (1.25")	26 (1.02")	40.1 (1.58")
VTC-10-※-22	34.5 (1.36")	26 (1.02")	40.1 (1.58")
VTC-12-※-20	46 (1.81")	32 (1.26")	47.9 (1.89")

CARTRIDGE FLOW DIVIDER

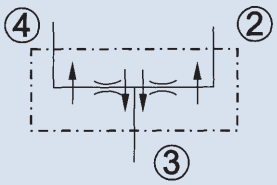

E

How to order

VFD - 10 - 45
1 2 3

1	Model				
2	Mounting size	10: Size 10	Cavity: CS10-4N (see page 164)	12: Size 12	Cavity: CS12-4N (see page 164)
		16: Size 16	Cavity: CS16-4N (see page 164)		

3 Flow range

Model	Flow Range (lpm)					
VFD-10-❋	07: 2.3~7.6	15: 4.5~15	22: 6.8~22.7	30: 9~30	37: 11~37	45: 13.5~45
VFD-12-❋	60: 30~60	70: 43~74	90: 53~90			
VFD-16-❋	90: 90	110: 110	150: 150	190: 194		

Division or combination ratio 50%-50%

Specifications

Model	Max. Pressure (bar)	Max. Flow (lpm)	Weight (kg)
VFD-10	350	45	0.15
VFD-12		90	0.3
VFD-16		194	0.4

Dimensions / Performance curves

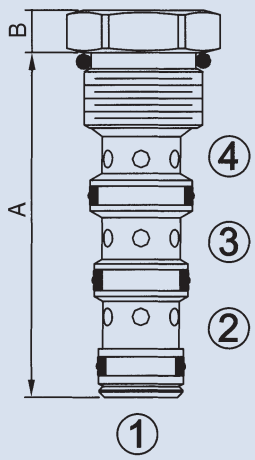

Model	A	B
VFD-10	64 (2.52")	7.9 (0.31")
VFD-12	98.6 (3.88")	9.5 (0.37")
VFD-16	104.6 (4.12")	12.5 (0.49")

Unit: mm (inch)

VFD-10

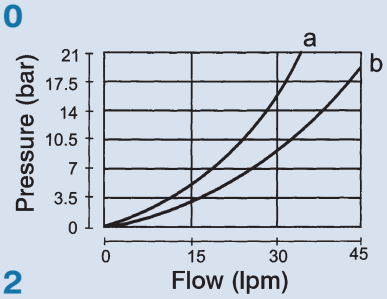

VFD-16

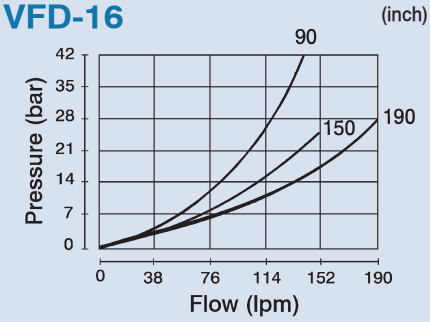

VFD-12

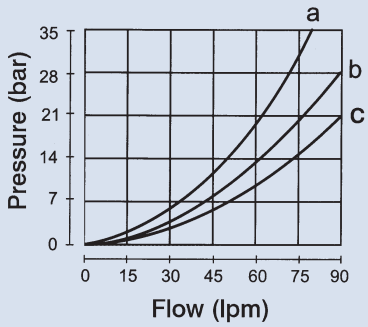

CARTRIDGE FLOW DIVIDER WITH BODY

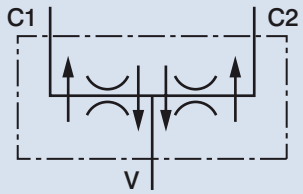

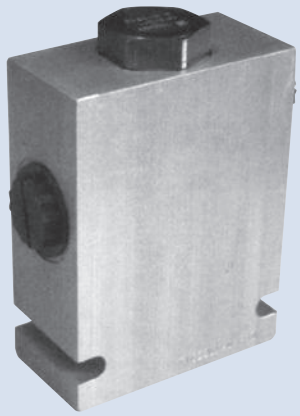

How to order

VFD - 04 - 11 - ※

1 2 3 4

1	Model		
2	Port size 03: 3/8" 04: 1/2" 05: 3/4" 06: 3/4" 08: 1"		
3	Flow range	Model	Flow Range (lpm)
		VFD-03	07: 2.3~7.6 15: 4.5~15 22: 6.8~22.7 30: 9~30 37: 11~37 45: 13.5~45
		VFD-04	11: 6.5~11 25: 10~25 38: 25~38
		VFD-05	60: 30~60 70: 43~74 90: 53~90
		VFD-06	90: 90 110: 110 150: 150
		VFD-08	90: 90 110: 110 150: 150 190: 194
		Division or combination ratio 50%-50%	
4	Port thread 1P: PT 2N: NPT 3G: PF (G) 4A: SAE		

Specifications

Model	Max. Pressure (bar)	Max. Flow (lpm)	Weight (kg)
VFD-03	250	45	0.6
VFD-04	210	38	0.8
VFD-05	250	90	2.05
VFD-06		150	2
VFD-08		194	2

CARTRIDGE FLOW DIVIDER WITH BODY

E

Dimensions

Unit: mm
(inch)

VFD-03

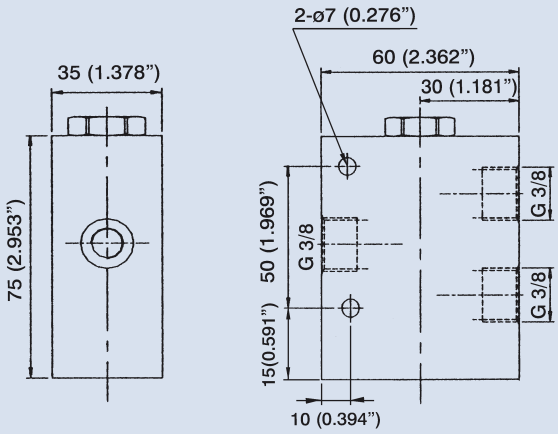

VFD-04

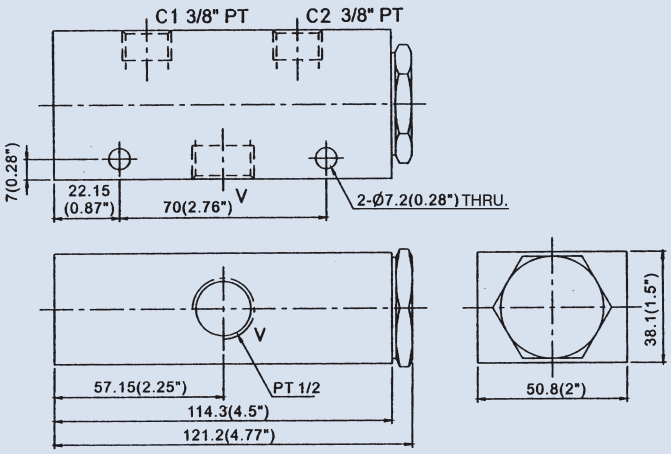

VFD-05

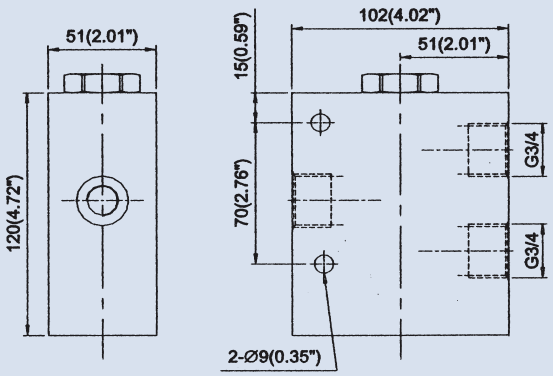

VFD-06

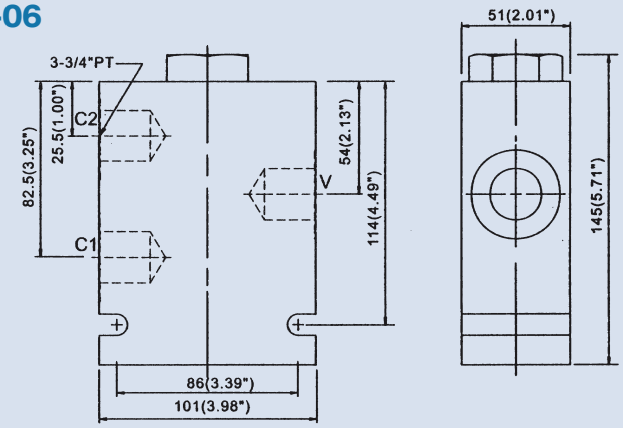

VFD-08

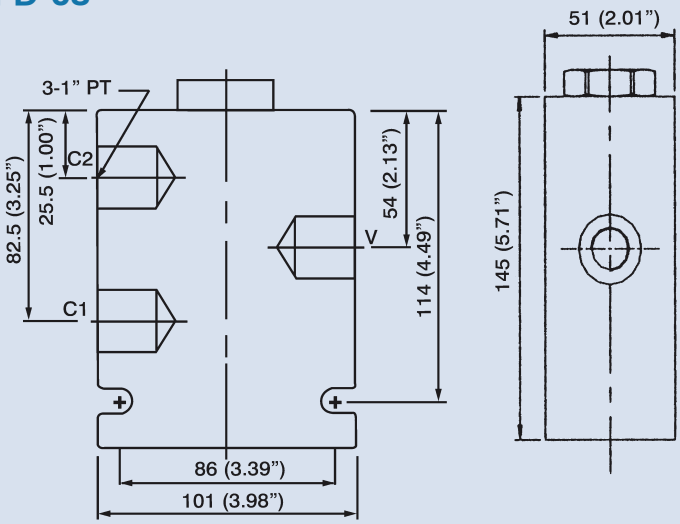

CARTRIDGE PRIORITY FLOW DIVIDER

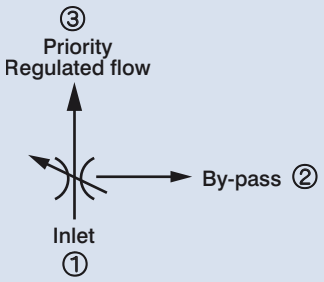

How to order

VF - 10 - ※
1 2 3

1	Model
2	Mounting size 10: Size 10 Cavity CS10-3N (see page 163) 12: Size 12 Cavity CS12-3N (see page 164)
3	Adjustment option None: Tool adjustment K: Hand-bar adjustment

Specifications

Model	Max. Pressure (bar)	Max. Flow (lpm)	Weight (kg)
VF-10	210	57	0.24
VF-12	240	75	0.4

Dimensions

Unit: mm
(inch)

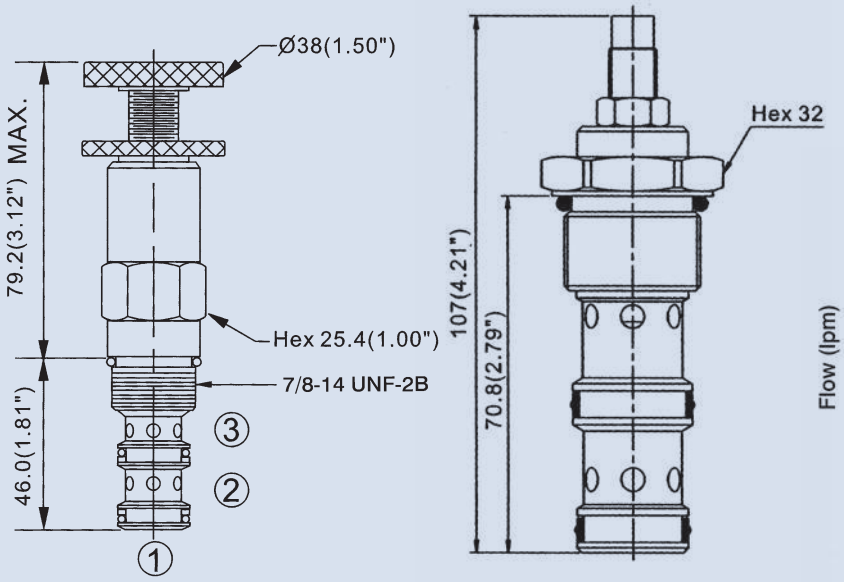

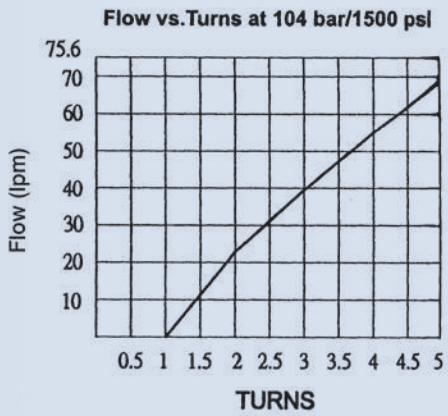

CARTRIDGE PRIORITY FLOW DIVIDER

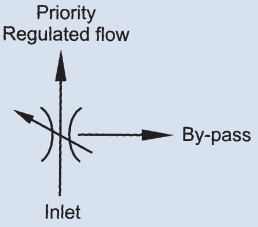

E

How to order

VF - 50 - 30 - T
1 2 3

1	Model
2	Flow adjusting range 15: 0~16 lpm 30: 0~32 lpm
3	Mounting type T: Thread connecting G: Sub-plate mounting

Specifications

Model	Max. Pressure (bar)	Max. Flow (lpm)	Weight (kg)
VF-50	248	49	0.75

Dimensions

Unit: mm
(inch)

SUBPLATE

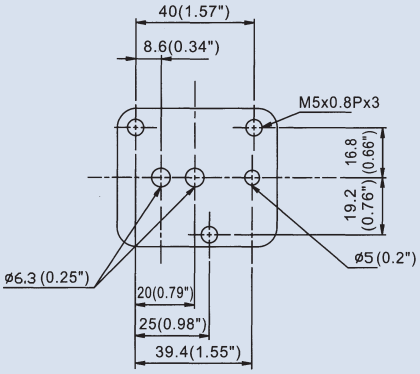

DIMENSIONS

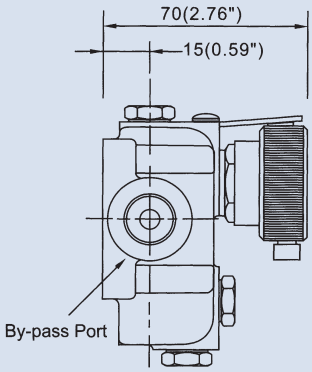

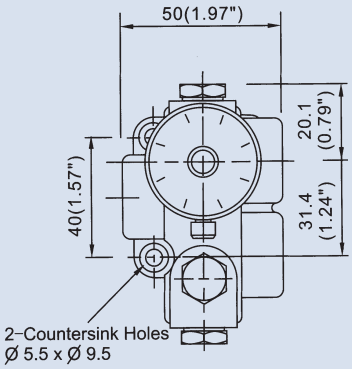

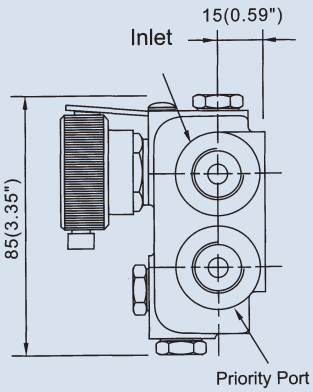

CARTRIDGE SHUTTLE VALVE

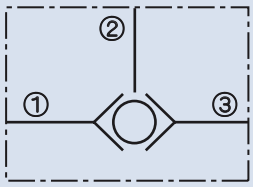

How to order

VLS - 04
1 2

1	Model				
2	Mounting size	04: Size 04	Cavity CS04 (see page 163)	08: Size 08	Cavity CS08-3N (see page 163)
		10: Size 10	Cavity CS10-3N (see page 163)		

Specifications

Model	Max. Pressure (bar)	Max. Flow (lpm)	Weight (kg)
VLS-04	350	6	0.01
VLS-08		19	0.07
VLS-10		30	0.09

Dimensions

Unit: mm (inch)

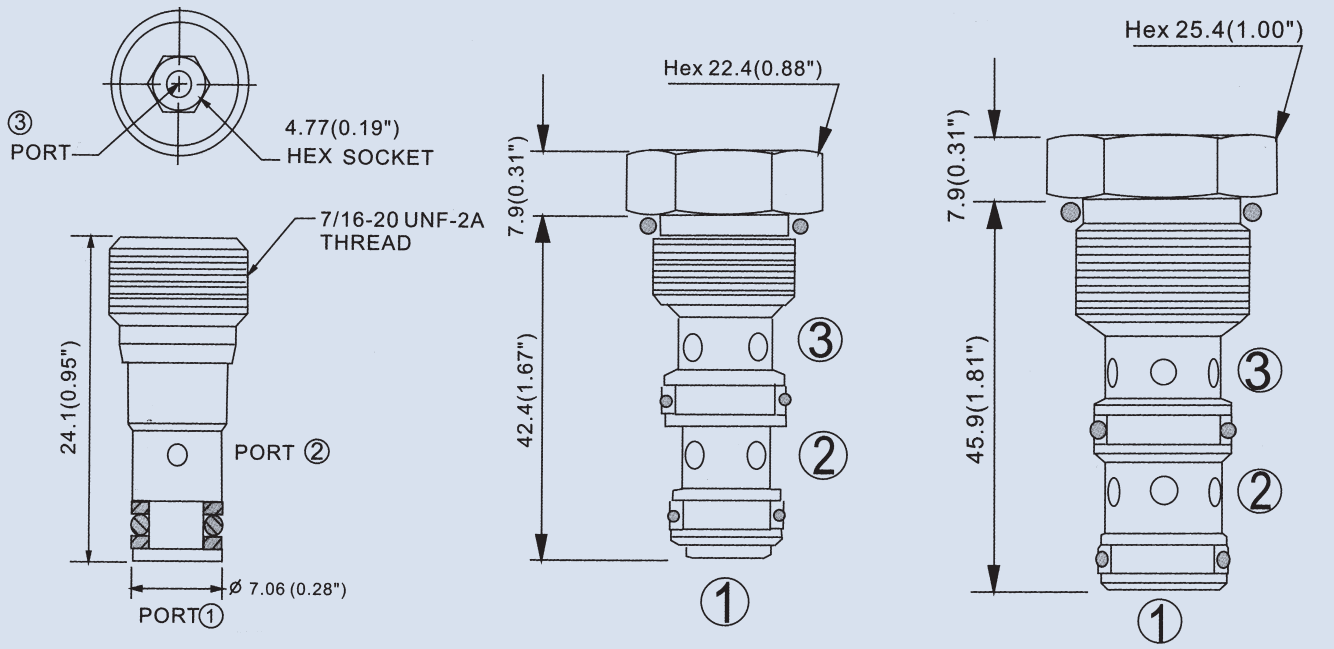

SHUTTLE VALVE

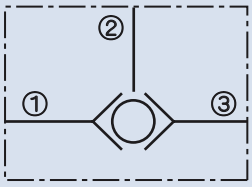

E

How to order

SH - 02 G
1 2 3

1	Model
2	Valve size 02: 1/4" 03: 3/8"
3	Mounting type G: Sub-plate mounting T: Thread connection

Specifications

Model		Max. Pressure (bar)	Max. Flow (lpm)	Weight (kg)	
Sub-Plate Mounting	Thread Connection			SH-02G	SH-02T / SH-03T
SH-02G	SH-02T	250	20	1.08	0.2
	SH-03T		25		0.8

Dimensions / Performance curves

Unit: mm (inch)

SH-02G

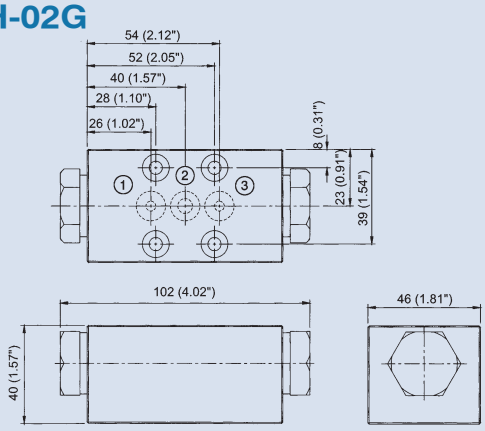

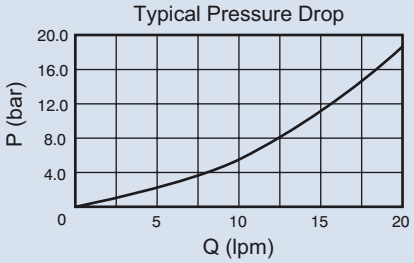

SH-02T

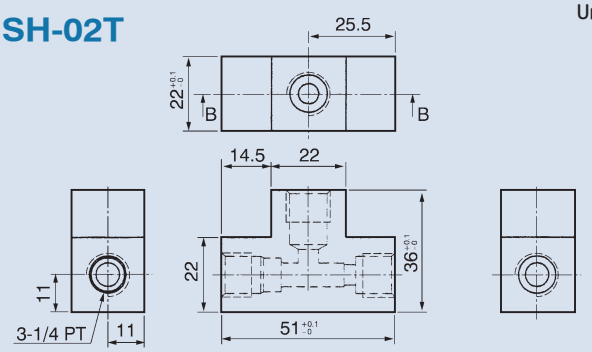

SH-03T

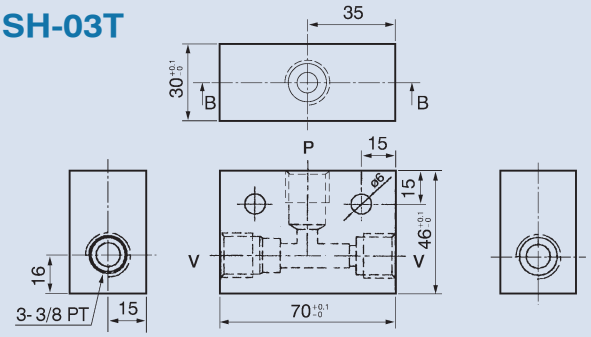

LOGIC VALVE

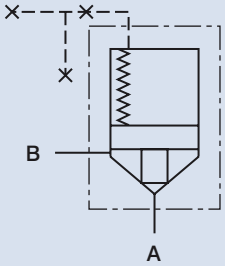

How to order

LCV - 16 - 05 - E - NC

1 2 3 4 5

1	Model
2	Valve size
3	Cracking pressure 05: 0.5 bar 20: 2 bar 50: 5 bar
4	Valve type B: Pressure control E: Directional / flow control D: Directional / flow control with cushion
5	Control type NC: Normal closed NO: Normal open

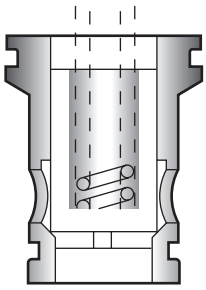

B: Pressure

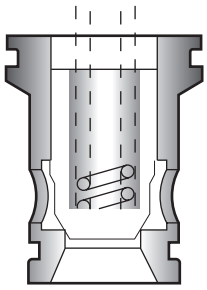

E: Directional / Flow

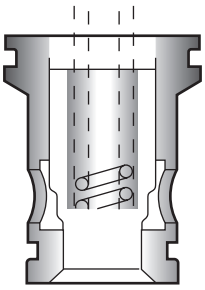

D: Directional / Flow With Cushion

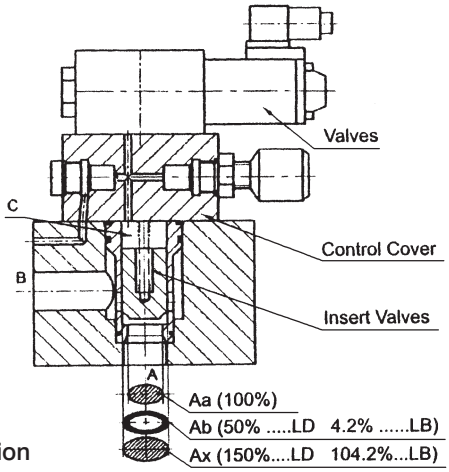

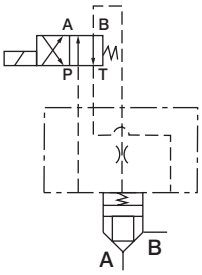

Specifications

Model	Max. Flow (lpm)	Rated Flow (lpm)	Max. Pressure (bar)	Cracking Pressure (bar)	Ratio of Poppet Area	Weight (kg)
LCV-16	200	130				0.18
LCV-20	310	230				0.32
LCV-25	450	350		05: 0.5		0.43
LCV-32	700	500	315	20: 2	2 : 1	0.87
LCV-40	1100	850		50: 5		1.59
LCV-50	1700	1400				2.74
LCV-63	2800	2100				5.80

LOGIC VALVE

Dimensions / Performance curves

LCV

Unit: mm
(inch)

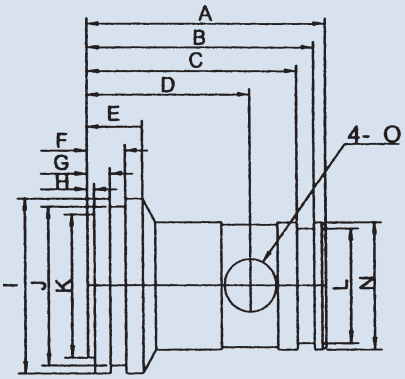

Size	A	B	C	D	E	F	G	H	I	J	K	L	N	O
16	56 (2.20")	52 (2.05")	46.5 (1.83")	37 (1.46")	16 (0.63")	10.5 (0.41")	7 (0.28")	2.4 (0.09")	32 (1.26")	29.2 (1.15")	23.7 (0.93")	22.2 (0.87")	25 (0.98")	10 (0.39")
20	64 (2.52")	61 (2.40")	53.5 (2.11")	40 (1.57")	14 (0.55")	11.4 (0.45")	6 (0.24")	2.3 (0.09")	40 (1.57")	35 (1.38")	26 (1.02")	25 (0.98")	30 (1.18")	11 (0.43")
25	72 (2.83")	69 (2.72")	62.6 (2.46")	43 (1.69")	16 (0.63")	13.5 (0.53")	8.8 (0.35")	1.8 (0.07")	45 (1.77")	40.8 (1.61")	37 (1.46")	29.8 (1.17")	34 (1.34")	14 (0.55")
32	85 (3.35")	81 (3.19")	74.6 (2.94")	58 (2.28")	20 (0.79")	13.6 (0.54")	8 (0.31")	2.4 (0.09")	60 (2.36")	55 (2.17")	47.5 (1.87")	40.8 (1.61")	45 (1.77")	18 (0.71")
40	105 (4.13")	97 (3.82")	90.6 (3.57")	66.5 (2.62")	24 (0.94")	15.6 (0.61")	10 (0.39")	2.4 (0.09")	75 (2.95")	70 (2.76")	62 (2.44")	50.8 (2")	55 (2.17")	23.5 (0.93")
50	122 (4.8")	114 (4.49")	107.6 (4.24")	83 (3.27")	20 (0.79")	14.6 (0.57")	9 (0.35")	2.4 (0.09")	90 (3.54")	85 (3.35")	76.8 (3.02")	63.8 (2.51")	68 (2.68")	28 (1.10")
63	155 (6.10")	145.5 (5.73")	134 (5.28")	115 (4.53")	27 (1.06")	21 (0.83")	12 (0.47")	4.6 (0.18")	120 (4.72")	110 (4.33")	94 (3.7")	80 (3.15")	90 (3.54")	25 (0.98")

Test conditions: Without spring
Oil temperature: 50° Viscosity: 35 cst

LCV-16

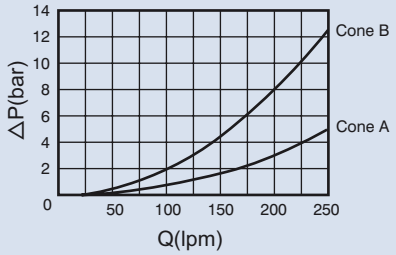

LCV-25

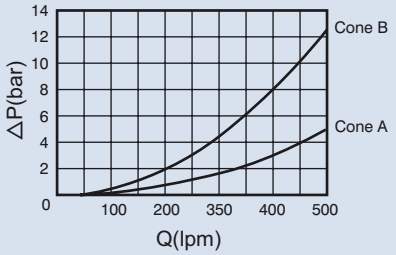

LCV-32

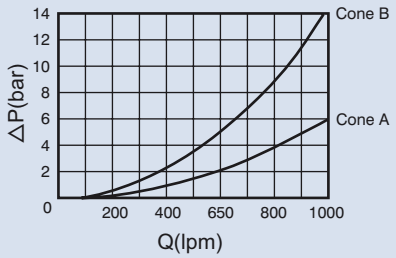

LCV-40

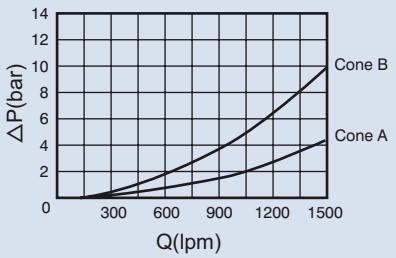

LCV-50

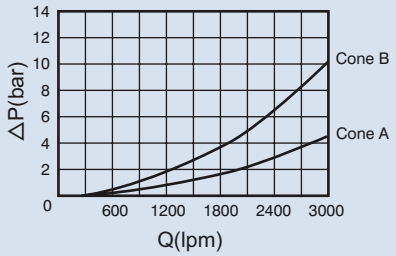

LCV-63

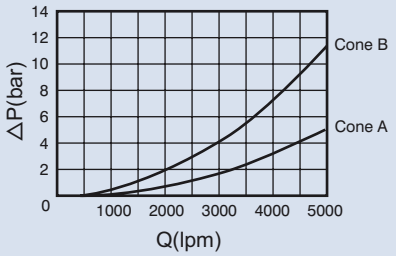

CARTRIDGE HAND PUMP

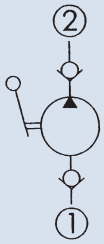

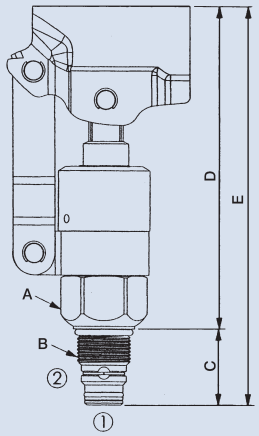

How to order

HP - 10W - 20 - A - N
1 2 3 4 5

1	Model
2	Mounting size 10W: 10W-2 Cavity CS10-2N (see page 163) 16W: 16W-2 Cavity CS16-2N (see page 163)
3	Operation 20: Push to pressurize
4	Output cc/stroke 10W A: 7.4 B: 10.6 16W A: 21.3
5	N: Non-adjustable

※ Lever must be ordered separately. Code no: 7G YAG001 Length: 405 mm

Specifications

Model	Max. Pressure (bar)	Displacement Per Stroke (cc)		Installation Torque (nm)	Weight (kg)
		A	B		
HP-10W	210	7.4	10.6	35~45	0.83
HP-16W		21.3	-	60~70	1.35

Dimensions

Model	Dimensions (mm)	B	Dimensions (mm)		
	A		C	D	E
HP-10W	25.4 Hex.	7/8"-14 UNF-2A	32	130	162
HP-16W	38 Hex.	1-5/16"-12 UNF-2A	44.5	144	189

Performance curves

HP-10W

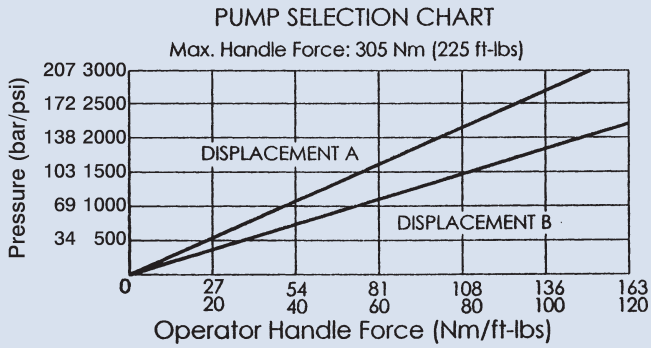

HP-16W

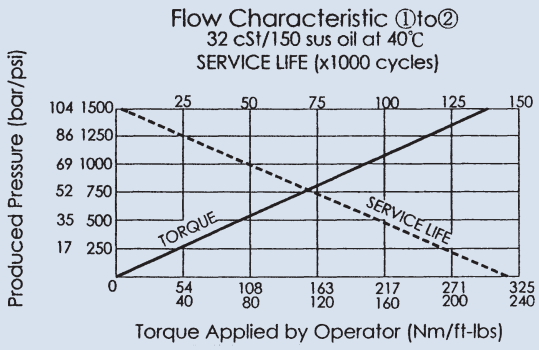

CAVITY DIMENSIONS FOR CARTRIDGE VALVE

E

Dimensions

Unit: mm
(inch)

CS08-2N

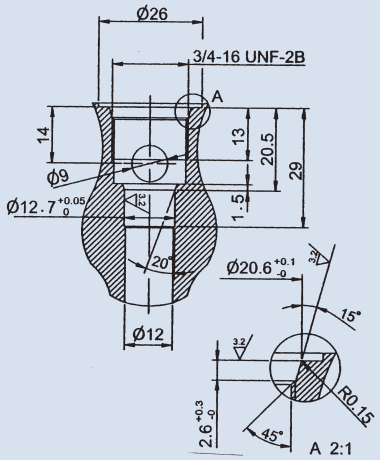

CS10-2N

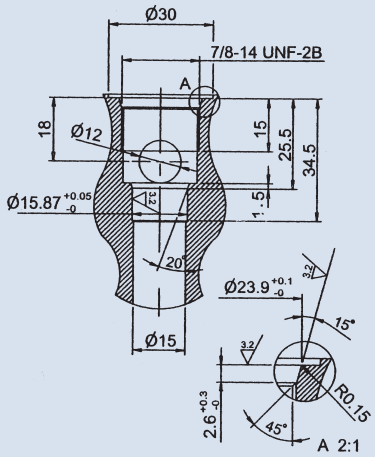

CS12-2N

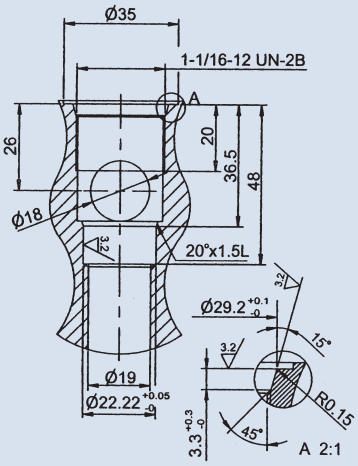

CS16-2N

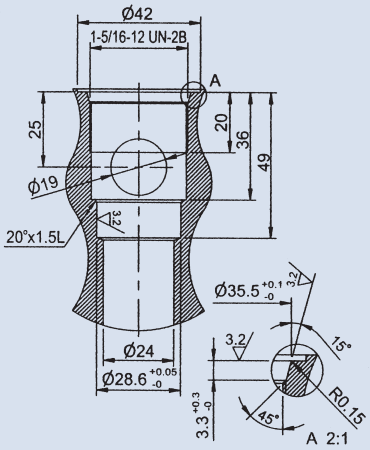

CS42-2N

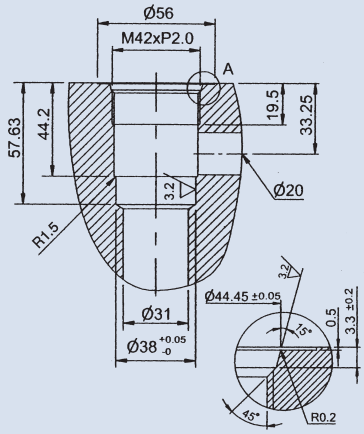

CS04

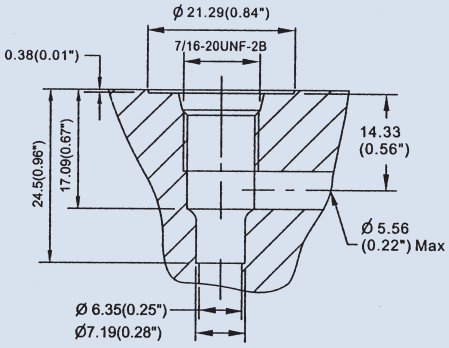

CS08-3N

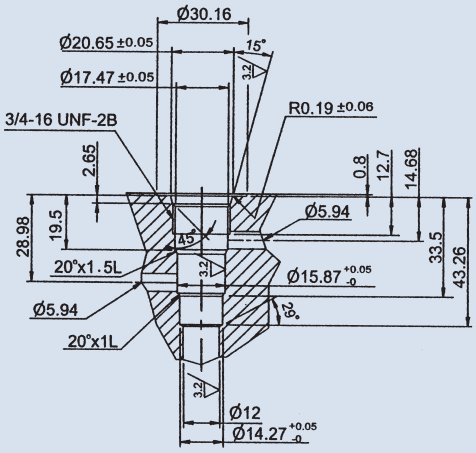

CS10-3N

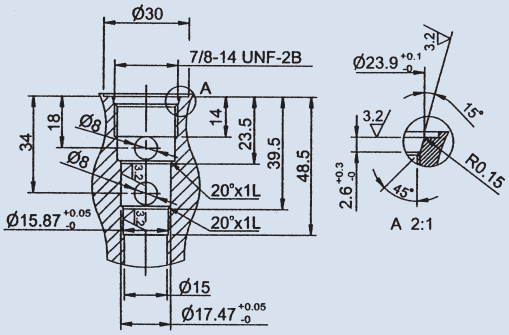

CAVITY DIMENSIONS FOR CARTRIDGE VALVE

Dimensions

Unit: mm

CS12-3N

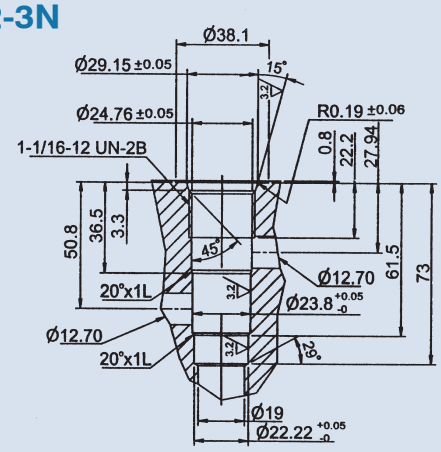

CS08-4N

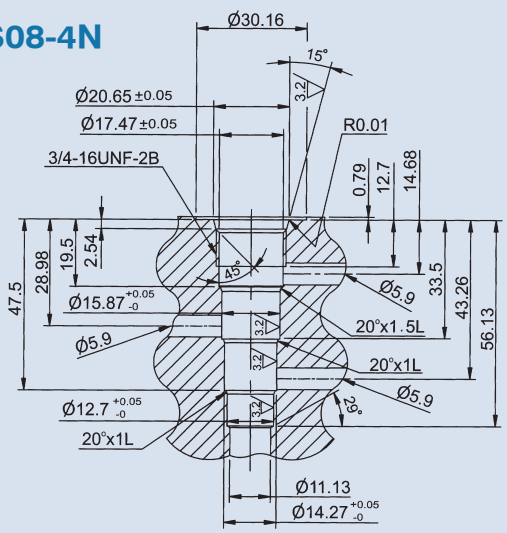

CS10-4N

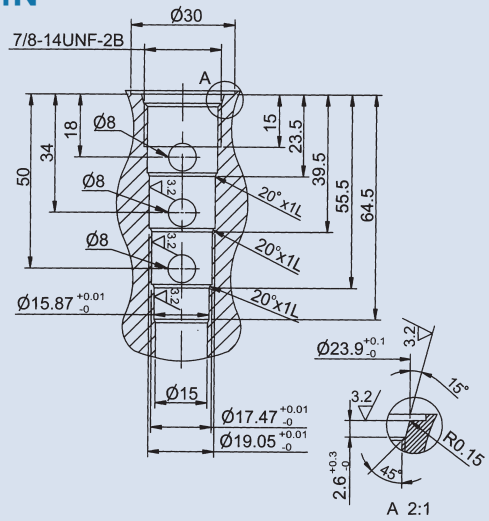

CS12-4N

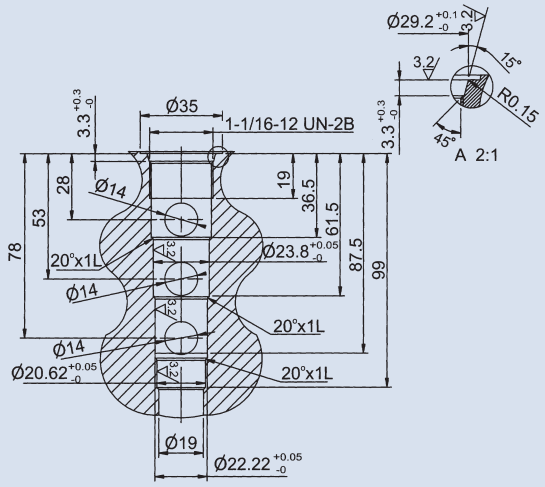

CS16-4N

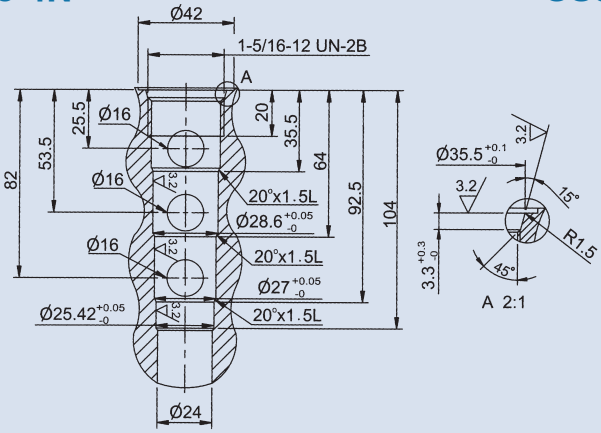

CS08-3S

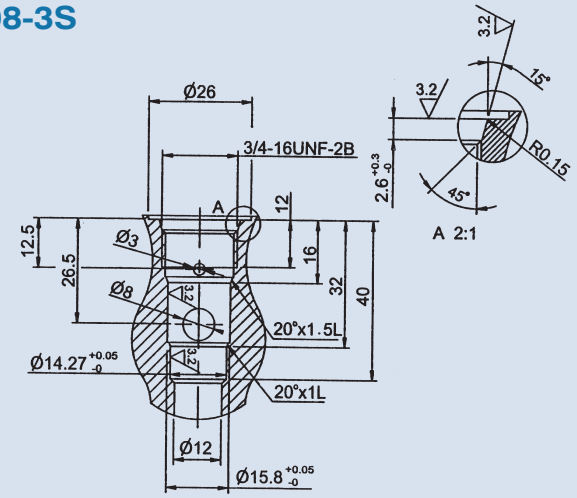

CAVITY DIMENSIONS FOR CARTRIDGE VALVE

E

Dimensions

Unit: mm

CS10-3S

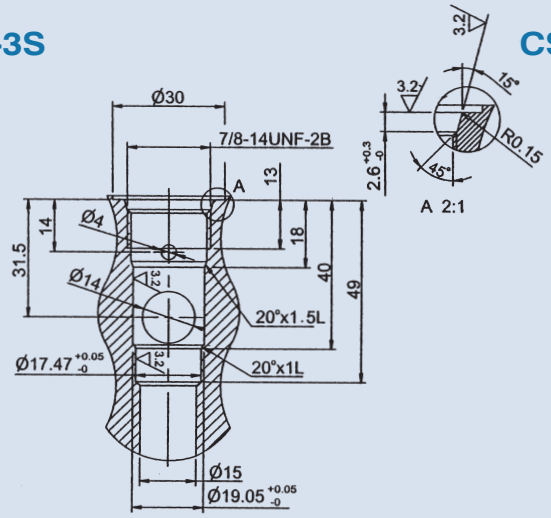

CS12-3S

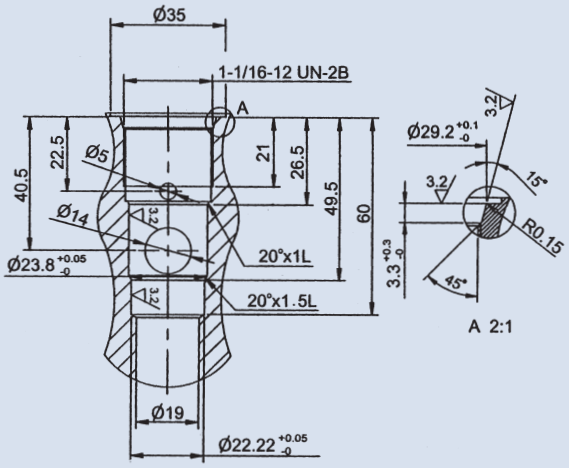

CS16-3S

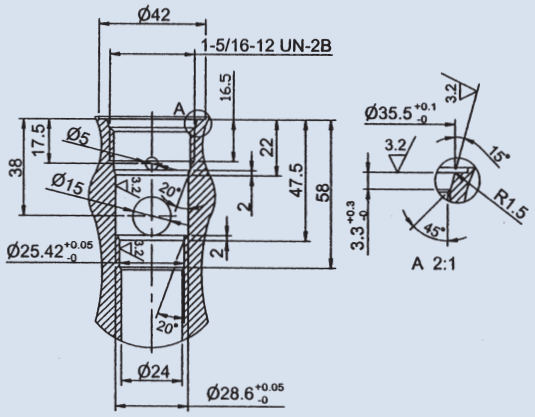

CS20-3S

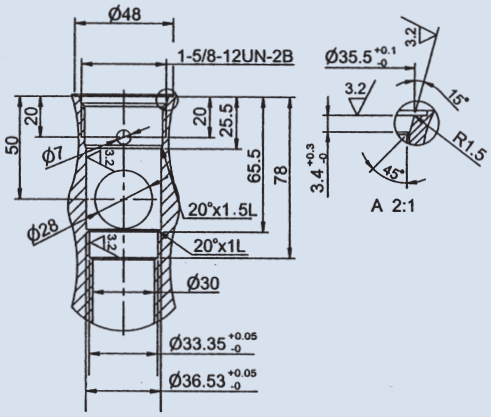

CSE017-2N

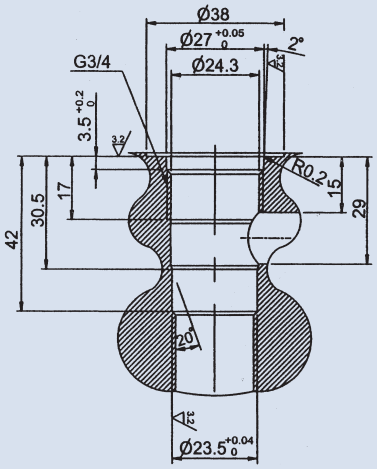

CSE019-2N

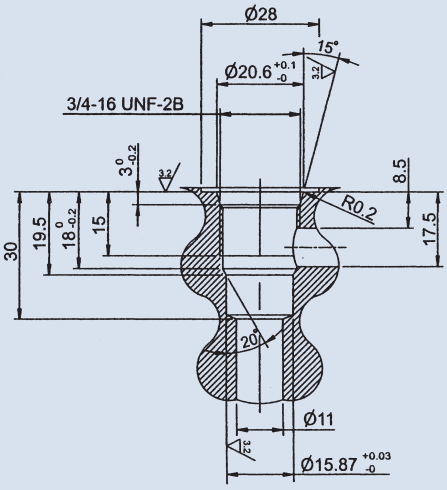

CAVITY DIMENSIONS FOR CARTRIDGE VALVE

Dimensions

Unit: mm

CSE021-2N

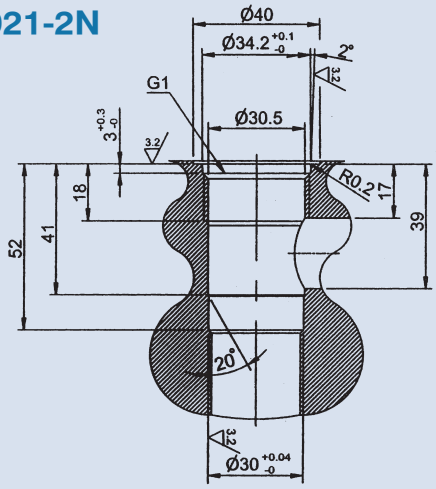

CST-2A

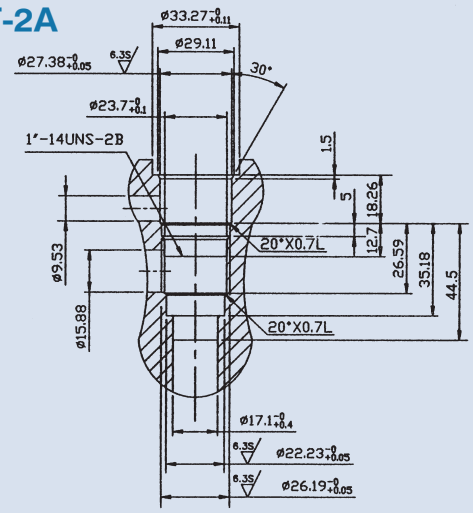

CST-3A

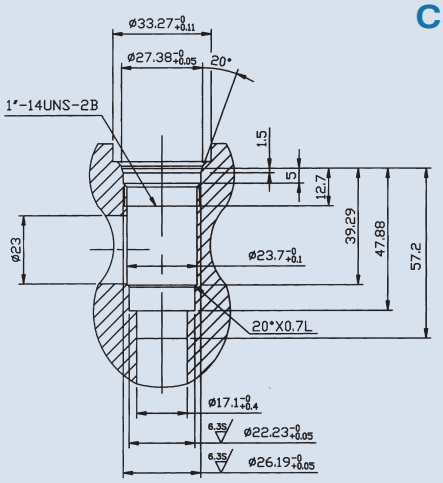

CST-5A

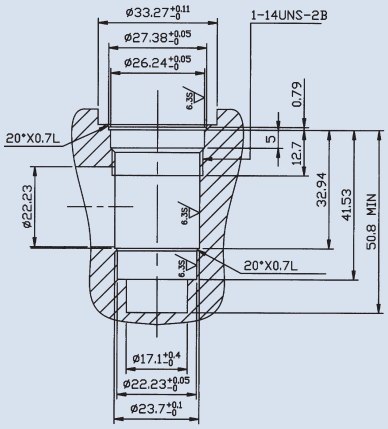

CST-10A

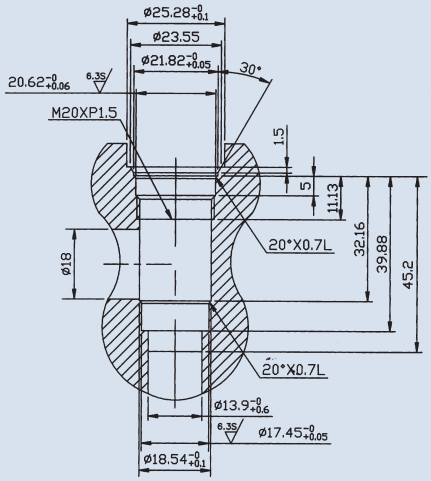

CAVITY DIMENSIONS FOR CARTRIDGE VALVE

Dimensions

Unit: mm

CST-11A

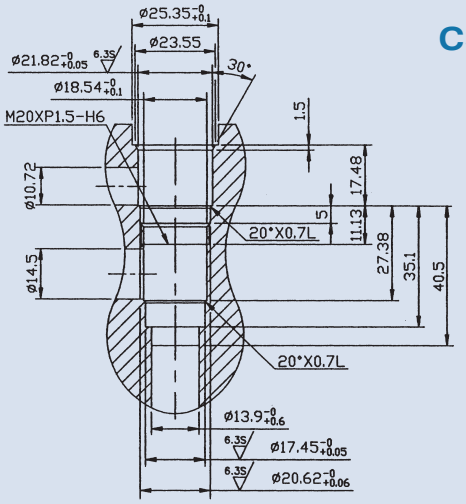

CST-13A

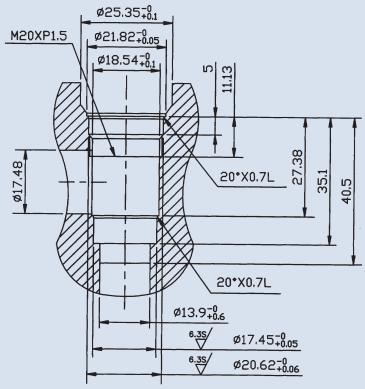

CST-16A

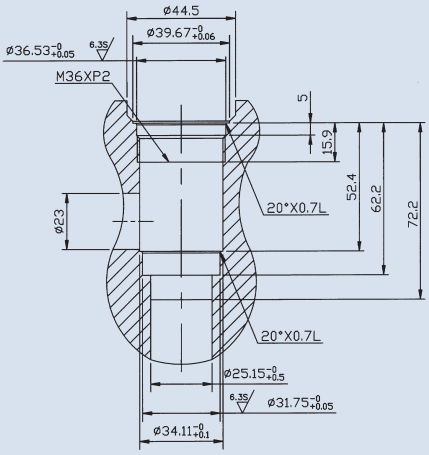

CST-17A

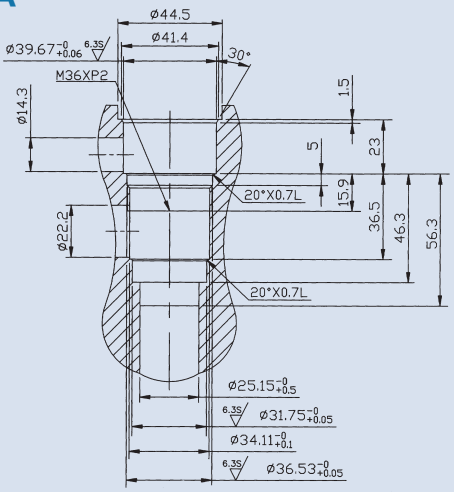

CST-18A

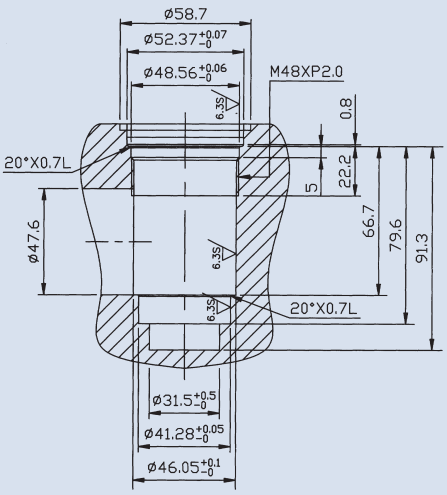

CST-19A

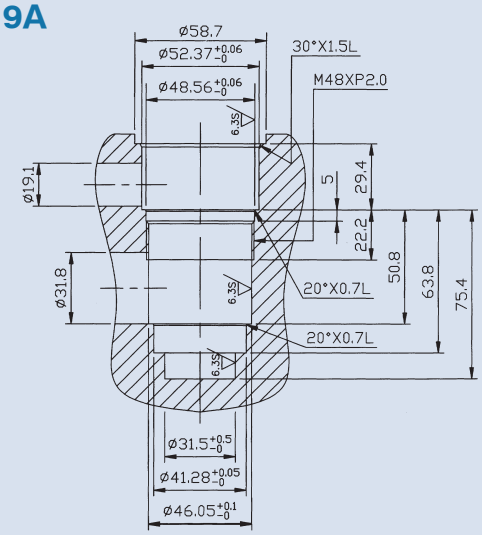

4ManPro
Mexico Branch Office
Elements For Manufacturing Processes

MEXICO BRANCH OFFICE
Roberto Diaz No. 401
Ciudad Industrial
Aguascalientes, Ags.
México
20290

4ManPro@4ManPro.com
(449) 171 3420
www.4ManPro.com/SPA/

USA BRANCH OFFICE
4ManPro®
708 Main St.
10th Floor
Houston, Tx, USA
77002

4ManPro-USA@4ManPro.com
+1 (832) 871 5022
www.4ManPro.com/ENG/

Elements For Manufacturing Processes

HI HYDROME