4ManPro

Elements For Manufacturing Processes

FULL CATALOG

YUKEN

YUKEN HYDRAULICS (TW) CO., LTD

1. Front View of the Main Factory
2. Front View of 2nd Factory
3. Power Unit Assembly Line
4. Horizontal Machining Centers
5. Processing Production Line (2nd Factory)
6. Vane Pumps Test Bench
7. Proportional Electro-Hydraulic Controls Test Bench
8. Solenoid Valves Assembly Line

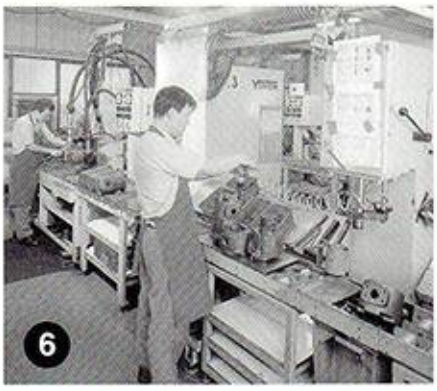

Brief Introduction

The main factory of Yuken Hydraulics (T.W.) Co., Ltd., is located at No. 12 7th Rd., Taichung Industrial Park, Taichung, Taiwan. the area is 9,543 m2. 2nd factory is located at No. 6,7th Rd, the area is 5,623 m2.

"To improve Technology, to improve Quality, to strengthen Service, and to satisfy Customers" are our consistent quality promises. In order to keep our promises, we have a strong focus on the promotion of automation and computerization covering sales, design, operations, production management and even quality control, to ensure quality or our products and services. All our employees pursue the organization's Goal - "To work hard, to ameliorate, and to grow perpetually."

As the domestic market was getting saturated gradually, we started exploring overseas market since July, 1996. The achievement has been remarkable. Our market is not only in Asia but also North America, Europe, Middle East and Africa.

March, 1997,	Yuken Hydraulics (T.W.) Co., Ltd., was awarded ISO-9002 certificate and bulit up international-level quality system.
January, 1998,	We open our second factory located at No.6 7th Rd., Taichung Industrial Park, Taichung, Taiwan, area is 5,623 m2.
February, 2002,	Yuken Hydraulics (T.W.) Co., Ltd., was awarded CSA-C/US certificate, to strengthen our competition in North American market.
May, 2002,	Yuken Hydraulics (T.W.) Co., Ltd., was awarded ISO-9001 certificate and scaled new heights of quality system.
October, 2002,	Organization simplified, management institutionalized.
June, 2003,	Production line readjusted, equipment reinforced, production rationalized, striding into a new milestone.
April, 2005,	Proportional Valve was awarded CE certificate.
November, 2005,	Solenoid Valve was awarded CE certificate.
November, 2008,	Solenoid Valves with monitoring switches were patented in Taiwan.
March, 2009,	Solenoid Valves with monitoring switches were patented in China.
June, 2010,	Solenoid Valves with monitoring switches were awarded CE certificate.
December, 2011,	2nd factory's expansion is finished.

Yuken Hydraulics (T.W.) Co., Ltd. has been leading the Industry here in Taiwan. We will increase technical cooperation with our parent company, Yuken Kogyo Co., Ltd. in the future. We will build an efficient and comprehensive sales network both in domestic and overseas market, Concurrently, we will train our talented people extensively to upgrade quality continuously. All our efforts are to achieve our goal - to grow perpetually!

- Name : **Yuken Hydraulics (T.W.) Co., Ltd.**
- Main Factory : No. 12, 7th Road, Taichung Industrial Park, Taichung, Taiwan.
  Tel: 886-4-2359-3077 (Rep.)
  Fax:886-4-2359-2500
  Website: http//www.yuken.com.tw
- Taichung Office: (Sales Dept) No. 12, 7th Road, Taichung Industrial Park, Taichung, Taiwan.
  Tel: 886-4-2359-3077 (Rep.)
  Fax:886-4-2359-8813
- Taipei Office : (Sales Dept) No. 18-1, Wun Hua 5th Road, Guei Shan Township, Taoyuan County, Taiwan.
  Tel: 886-3-328-3628 (Rep.)
  Fax:886-3-328-3242
- Established : 1, May, 1969
- Paid in Capital : NT$ 90,000,000 (as of January, 2004)
- Line of Business :
  - Manufacture & sales of Hydraulic Pumps, Pressure Control Valves, Flow Control Valves, Directional Control Valves, Modular Valves, Proportional Electro-Hydraulic Control Valves, Electro-Hydraulic Servo Valves, Power Unit, Hydraulic Cylinders, Hydraulic Motors & Associated Products.
  - Design, manufacture & installation of Hydraulic systems.
- Licensor : **YUKEN KOGYO CO., LTD.**

Group of Components

· Hydraulic Pumps

· Pressure Control Valves

· Flow Control Valves

· Directional Control Valves

· Check Valves

· Proportional Electro-Hydraulic Control

A Hydraulic Pump

1 MPa = 10.2 kgf/cm²

Pump Type	Max. Pressure MPa	Nominal Displacement cm³/rev (1 2 5 10 20 50 100 200 500)	Page
ARL1 Series Variable Piston Pumps	7	ARL1	9
AML1 Series Motor-Pumps	7	AML1	12
ML1 Series Electric Motors	-	ML1 (0.75 / 1.5 / 2.2 kw)	15
AR Series Variable Piston Pumps	16	AR16 AR22	16
50T 150T Single Pumps	7	50T 150T	20
PV2R S-PV2R Series Single Pumps	21 (17.5/16/14)	PV2R1 PV2R2 S-PV2R2 PV2R3 S-PV2R3 PV2R4 S-PV2R4	24
PV2R S-PV2R Series Double Pumps	21 (17.5/16/14)	PV2R1 PV2R2 S-PV2R2 PV2R3 S-PV2R3 Small Volume Pumps; PV2R2 S-PV2R2 PV2R3 S-PV2R3 PV2R4 S-PV2R4 Large Volume Pumps	38
A16/22SR3, A16/22 SR4 Series Piston & Vane Pumps	21 (17.5/16/14)	A16 A22 Piston Pump; PV2R3 S-PV2R3 PV2R4 S-PV2R4 Vane Pump	48
SVPF Series Variable Vane Pump	7	SVPF-12 20 30 40	51
SVPDF Series Double Variable Vane Pump	7	SVPDF-30✲-30✲ SVPDF-30✲-40✲ SVPDF-40✲-40✲	52

B Pressure Control Valves

Valve Type	Max. Pressure MPa	Max. Flow L/min (1 2 5 10 20 50 100 200 500 1000)	Page
Remote Control Relief Valves	25	DT/DG-01	53
Direct Type Relief Valves	21	DT/DG-02	53
Pilot Operated Relief Valves	25	BT/BG-03 06 10	53
Low Noise Type Pilot Operated Relief Valves	25	S-BG-03 06	53
Solenoid Controlled Relief Valves	25	BST/BSG-03 06 10	57
Low Noise Type Solenoid Controlled Relief Valves	25	S-BSG-03 06	57
H & HC Type Pressure Control Valves	21	HT/HCT/HG/HCG-03 06 10	61
Pressure Reducing (and Check) Valves	21	RT/RCT/RG/RCG-03 06 10	67
Unloading Relief Valves	21	BUCG-06	72
Balancing Valves	14	RBG-03	73

C Flow Control Valves

Valve Type	Max. Pressure MPa	Max. Flow L/min (1 2 5 10 20 50 100 200 500 1000)	Page
Flow Control (and Check) Valves	21	FG/FCG-02 03 06 * 10 * * Yuken Kogyo Models	74
(One Way) Restrictors	21	SRCT/SRG/SRCG-03 SRCT/SRG/SRCG-06 SRCT/SRCG-10	77
Throttle (and Check) Modules	25	TC1G/TC2G-01	80
Needle Valves	35	GCT/GTCR-02	81

D Directional Control Valves 1 MPa = 10.2 kgf/cm²

Valve Type	Max. Pressure MPa	Max. Flow L/min (1 2 5 10 20 50 100 200 500 1000 2000 8000)	Page
Solenoid Operated Directional Valves	7	DSGL-01	84
Solenoid Operated Directional Valves	31.5	DSG-01 03	86
Solenoid Valves with Monitoring Switch-DSGS	31.5	DSGS-01 03	92
Solenoid Controlled Pilot Operated Directional Valves	31.5	DSHG-04 06 10	94
New Solenoid Valves with Monitoring Switch-DSHGN	25	DSHGN-03 04 06	99
Pilot Operated Directional Valves	31.5	DHG-04 06 10	104
Manually Operated Directional Valves	25 (21)	DMT DMG-03	107
Mechanically Operated Directional Valves	21 (25)	DCT DCG-01 03	109
Mechanically Operated Directional Valves with Monitoring Switch-DCGS	21 (25)	DCTS DCGS-01 03	112
New Logic Valves with Monitoring Switch -LDLS	30	LDLS-16 25 32 40 50	115
Check Valves	21	CIT-03 06 10 CRT CRG-03 06 10	119
Pilot Controlled Check Valves	25	CPT/CPG CPDT/CPDG-03 06 10	121
Poppet Type Directional Valves	21	LVT LVG-03	123
Prefill Valves	25	PF PDF-80 90 100 125 150 PF-200 PF-300	124

E Proportional Electro-Hydraulic Controls

Valve Type	Max. Pressure MPa	Max. Flow L/min (1 2 5 10 20 50 100 200 500 1000)	Page
Proportional Electro-Hydraulic Pilot Relief Valves	25	EDG-01	131
Proportional Relief Valves	25	EBG-03 06 10 * * Yuken Kogyo Models	133
Power Saving Valves	25	EFBG-03 06 10	135
Power Saving Valves 10Ω~10Ω	25	EFBG-03	141
Power Saving Valves High Performance	25	ELFBG ELFBCG-03 06	143
New Proportional Electro-Hydraulic Directional and Flow Control Valves	25	EDFG-01 EDFHG-03 04 06	149
Power Amplifiers	-	AME-D2-H1 (Yuken Kogyo Models) AMN-D-20T AMN-D-L-20T SK1115-※-30T AMN-W-10T	156

F Other Valves

Valve Type	Max. Pressure MPa	Max. Flow L/min (1 2 5 10 20 50 100 200 500)	Page
Lift Valves	21	LVST-03	165
Air Bleed Valves	21	AVT-03-05 AVT-03-20	166
Automatic Shut Off Valves	21	DAS-03-20	166

G Modular Base Plates

Series Number	Max. Pressure MPa	Max. Flow L/min (0 20 40 60 80)	Page
Base Plates	31.5	MMC-01 MMC-03	167

* As for the products other than those listed in this catalogue, please consult with our engineers for your requirement.

General Information

Design Standard

■The distinctive features of Yuken Standard products is as shown below.

Feature	Domestic Standard	Remarks
Port Tapping	Rc(=PT)	Taper Pipe Thread (ISO 7/1)
Port Tapping (Partial)	G(=PF)	Straight Pipe Thread (ISO 228/1)
Pressure Gauge Tapping	Rc(=PT)	Taper Pipe Thread (ISO 7/1)
Mounting Bolts	Metric	General Purpose Thread (ISO 261)
Mounting Dimensions	Metric	
Conduit Entry	G(=PF)	Straight Pipe Thread (ISO 228/1)
Solenoid Voltages AC/DC	Domestic voltage	Voltage and frequency change according to country
Frequency	50/60 Hz	
Electronic Amplifier Input Supply	Domestic voltage 50/60 Hz	
Graphic Symbol	ISO Standard	ISO 1219
Valve Port Size	Inch	

Design Number

■Yuken products have factory applied Design numbers, the key to which is as follows.

Example: 4222T68 — 42 22 T68

Major Design No. — 42

Minor Design No. — 22

Design No. for modified products in Taiwan — T68

Omitted: Domestic standard

Design numbers are subject to change. But installation dimensions and specifications remain unchanged for variation in second digit of design numbers (Minor Design No.).

Hydraulic Fluids

■Type of hydraulic fluids

- Petroleum base oil-Please use anti-wear type hydraulic oil or R & O (Rust and Oxidation inhibitor) type hydraulic oil equivalent to ISO VG 32 or 46. Do not use VG 68 hydraulic oils in winter; it will cause suction failure or cavitation.
- Fire resistant or other special fluids-Please consult with our sales engineers for your requirement.

■Fluid viscosity and temperature range

Please use hydraulic fluids in a range which satisfies the conditions of both viscosity and temperature (specified in table.)

Type of Components	Viscosity Range	Temperature Range
Hydraulic Pumps	20 ~ 400 mm^2/s ★1	0 ~ 70°
Pressure Control Valves	15 ~ 400 mm^2/s ★2	-15 ~ +70°
Flow Control Valves	FG、FCG : 20 ~ 200 mm^2/s Other : 15 ~ 400 mm^2/s	
Directional Contro Valves	15 ~400 mm^2/s	
Proportional Electro-Hydraulic Control Valves	EBG : 15 ~ 400 mm^2/s EFBG : 20 ~ 200 mm^2/s	

★1. When starting the pumps at low speed, maximum viscosity is restricted. (see table above right).

★2. If the valve is provided with a vent restrictor (ex.: A-BSG-03), the viscosity range should be 15-200 mm^2/s.

■Control of contamination

Contamination of the hydraulic fluids may cause any damage to the products or shorten the life of the products, therefore, please maintain the degree of contamination level lower than NAS Class Numbers as shown on the table 1 below

①The suction port line must have a reservoir type filter of 100 μm (150 mesh) and the filter should be installed minimum 50 mm higher than the bottom of the reservoir.

②The return line must have a line filter.

●Line type filter ratings

Type of Componetns	Line Type Filter
Pump's Suction Port	100μm
Circuit System	Piston Pumps: below 10μm E series components: below 20μm Other components: below 25μm

●Limit of contamination

Type of Components	NAS Class No.
Piston Pumps	10 or less
E series components	11 or less
Other components	12 or less

General Information

Limitation of general properties of fluids

Limit of fluid purity

Characteristics	Value changed
Specific gravity (15/4°C)	0.05
Colour	2
Flash point (°C) COC	60
Total acid number (mg KOH/g)	0.2
Viscosity (cSt)	10 ~ 15

Limit of water content

Applicable conditions	Limit
Fluid becomes milky with water contained.	To be replaced immediately.
Systems in which operating fluid circulates and returns to reservoir and which are not to be stopped for a long period of time.	1000ppm
System with long piping lines in which operating fluid in circuits does not completely circulate.	500ppm
Systems to be stopped for a long period of time (Safety systems) or systems in which operating fluid in circuits moves little, and precision control systems.	300ppm

High-pressure specialized hydraulic fluid

Manufacture	Brand
Mobil	Mobil DTE 25
Shell	Shell Tellus Oil 46
China Oil	Aw46 , LPS 46

Viscosity of hydraulic fluids

Viscosity range (40°C)

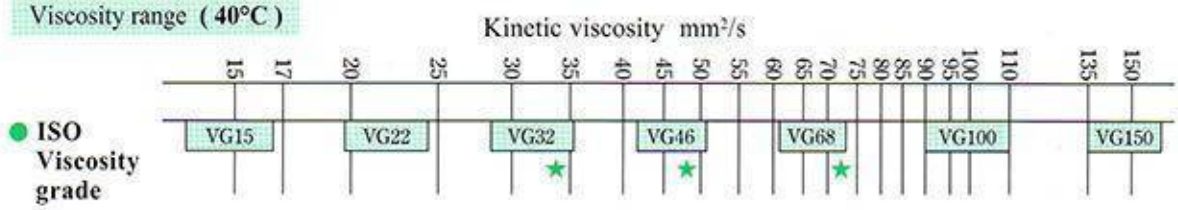

★ JIS K 2213 The Second Type (Added Turbine oil) for ISO VG32, 46, 68.

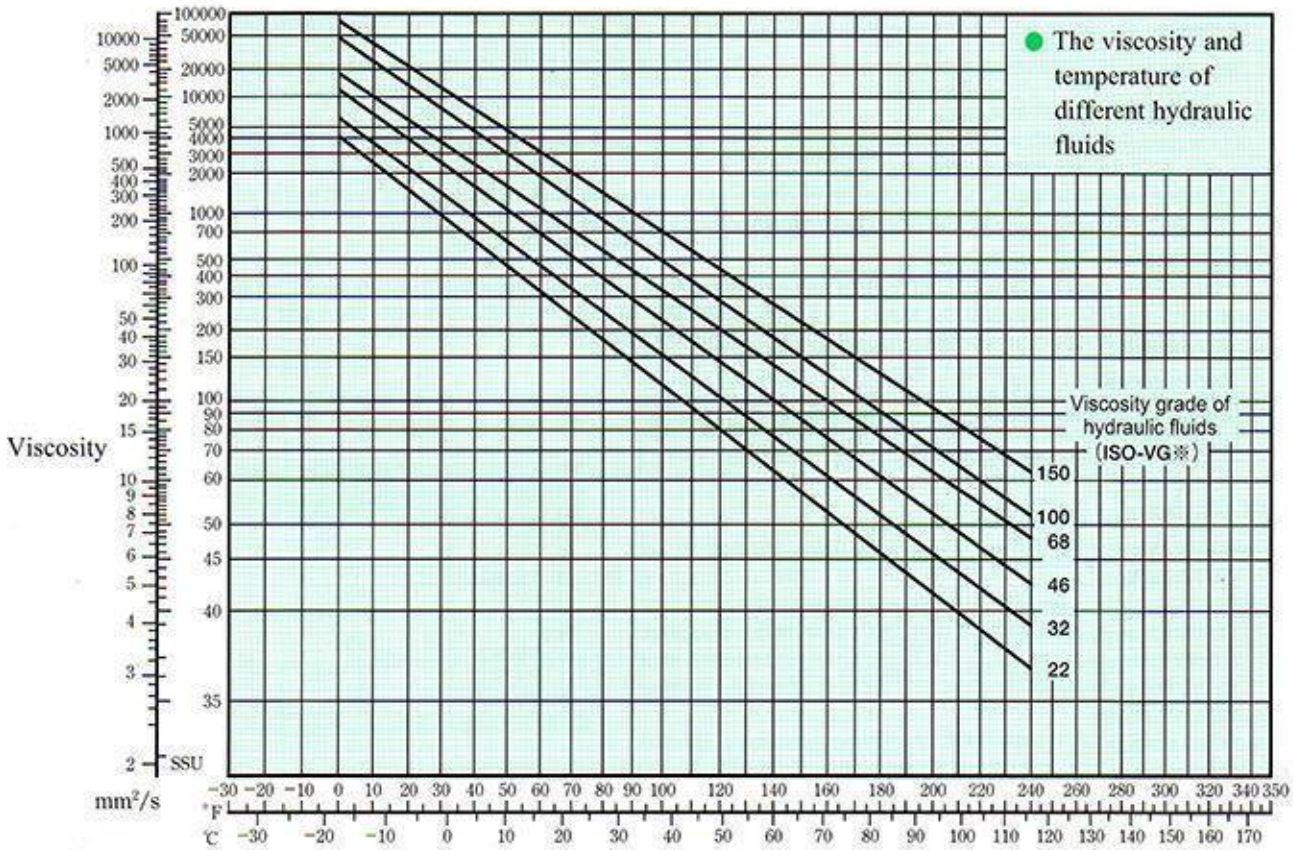

General Information

Instructions for hydraulic pump

1. Mounting

When installing piston pumps the filling port should be positioned upwards. When (S)-PV2R Single and Double Vane Pumps are operated below 1200 r/min; we recommend the suction port upwards to suck oil easily.

2. Alignment of Shaft

Employ a flexible coupling whenever possible, and avoid any stress from bending or thrust. Maximum permissible misalignment is less than 0.1 mm. TIR (Total Indicator Reading) and maximum permissible misangular is less than 0.2°.

3. Suction Pressure

★ 1 kPa = 0.01 kgf/cm² = 7.5 mmHg

Model		Suction Pressure Range		
		Min		Max.
		Petroleum base oils	Water containing phosphate easters	
Piston Pumps	ARL1 AR※	−16.7 kPa	−	+50 kPa
Single Pumps	50T 150T	−20 kPa	−16 kPa	+140 kPa
PV2R Single Vane Pumps	(S)-PV2R1 (S)-PV2R2	−20 kPa	−16 kPa	+30 kPa
	(S)-PV2R3 (S)-PV2R4	−20 kPa ★		
PV2R Double Vane Pumps	(S)-PV2R12 (S)-PV2R12	−20 kPa		
	(S)-PV2R13 (S)-PV2R23 (S)-PV2R24 (S)-PV2R34	−20 kPa ★		

- Make sure that the height of the pump suction port is within 1m from the oil level in the reservoir.
- Please follow the instructions of catalogue to choose suitable caliber of suction port pipes; otherwise, it might lead to dangerous cavitation. We suggest the suction port flow rate under 1 m/s.

● Table 1: The limitation of Min. suction pressure for specific displacement of hydraulic pumps.

The following hydraulic pumps with rotation speed 1700 r/min are restricted by the Min. suction pressure. (Min. suction pressure of other hydraulic pumps is -150 mmHg)

Model No.	Min. Suction Pressure kPa	
	1700 r/min Below	1700-1800 r/min
(S)-PV2R3-116	-20	0
(S)-PV2R4-237	-20	-13.3
(S)-PV2R※3-※-76	-20	-6.7
(S)-PV2R※3-※-94	-20	-6.7
(S)-PV2R※3-※-116	-20	0
(S)-PV2R※4-※-237	-20	-13.3
(S)-PV2R34-76-※	-20	-6.7
(S)-PV2R34-94-※	-20	-6.7
(S)-PV2R34-116-※	-20	0
(S)-PV2R34-116-237	-20	0

★For some displacement of pumps, the Min. suction pressure is restricted by the rotation speed. Please refer to Table 1.

4. Instructions of Piping

① In case the pump is installed above the oil level, the suction piping and suction line filter should be located lower than the pump position to prevent air in the suction line.

② When using steel pipes for the suction or discharge ports, excessive load from the piping to the pump generates excessive noise. Whenever there is fear of excessive load, please use rubber hoses.

5. Drain Piping

Install drain piping according to the chart and ensure that pressure within the pump housing should be maintained at a normal pressure of less than 0.1 MPa (14.5 PSI) and surge pressure of less than 0.5 MPa (72.5 PSI). Length of piping should be less than 1 m, and the pipe end should be submerged in oil.

Recommended Drain Piping Size:

Model	Piping Fitting Size	Internal Dia. of Pipe
ARL1, AR※	3/8 (Internal Dia. more than Ø8.5)	more than Ø10

6. Hydraulic Pumps Starting

- Before first starting, fill pump case with clean operating oil via the filling port.
- In order to avoid air blockage when starting pumps after long time shut down, to set up air bleeding valve on the discharge sides in advance or to loose discharge piping connection area for bleeding the air in the pipes. To the best of pumps' starting with no loading.
- When temperature is under 15°C in winter or viscosity is 200~400 mm²/s (1000SSU~1800SSU), please refer to the following instructions to start pumps in order to make better internal lubrication, and it will help the suction of the pump and extend the pump's life.
- Starting instructions: to start running pumps for 5 seconds, and then stop it for 10 seconds. To repeat this process 10 times, and then keep it running.

● Table 2: Max.viscosity list of starting at low rotation speed

Model	Rotation speed of starting r/min	Max. viscosity mm²/s
PV2R1 (S)-PV2R12 (S)-PV2R13 (S)-PV2R14	750	100
	950	200
50T (S)-PV2R2 (S)-PV2R23 (S)-PV2R24	600	100
	950	200

4ManPro

Elements For Manufacturing Processes

YUKEN

YUKEN HYDRAULICS (TW) CO., LTD

A

HYDRAULIC PUMPS

ARL1 Series Variable Piston Pumps

Max. Pressure 7 MPa

- High Efficiency: With long-term reliable technology of A & AR series piston pumps, Yuken designs high efficiency pressure control piston pumps.
- Smaller in Size and Lighter in Mass:
  ARL1 is 40% smaller than A series and 30% lighter than A series.
- Low Noise: Pressure 7 MPa, speed 1500 r/min, one meter horizontally away from pump head cover, the noise level is as low as 55 dB(A) standards for ARL1-16 at the full cut-off.
- There is no flow adjustment screw in ARL1 series, please choose it according to the displacement.

Model Number Designation

ARL1 - 16 - F R 01 S - 10

- Series Number
- Nominal Displacement
  - 6 : 6.2 cm³/rev
  - 8 : 8.5 cm³/rev
  - 12 : 12.3 cm³/rev
  - 16 : 16.3 cm³/rev
- Type of Mounting
  - F: Flange Mounting
  - L: Foot Mounting
- Direction of Rotation (View from the shaft end)
  - R: Clockwise (Normal)
- Piston Pump Control Type
  - 01: Pressure Compensator Control Type
- Suction Port Position (View from shaft end)
  - S: Side Port (Normal)
  - A: Downwards
- Design Number

★ : To use foot mounting type, the direction of suction port can only be chosen S type.

Graphic Symbol

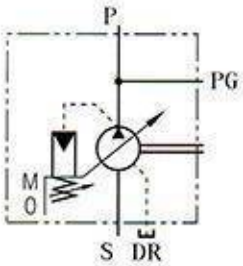

Specifications

Model No.	Nominal Displacement cm³ / rev	Minimum Pressure Adj. MPa	Max. Pressure MPa	Shaft Speed Range r / min		Mass kg
				Max	Min.	
ARL1-6-※R01※-10	6.2	1.2	7	1800	600	Flange Mtg 6.8
ARL1-8-※R01※-10	8.5					
ARL1-12-※R01※-10	12.3					Foot Mtg 9.0
ARL1-16-※R01※-10	16.3					

Full Cut-off Power

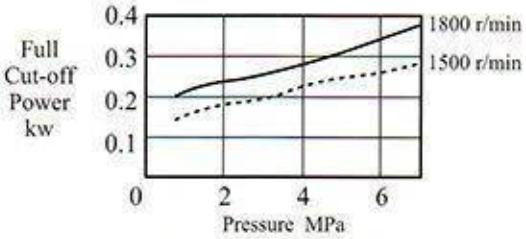

The above characteristics are based on fluid viscosity 32 mm²/s (ISO VG32 Oils, 40°C)

Drain

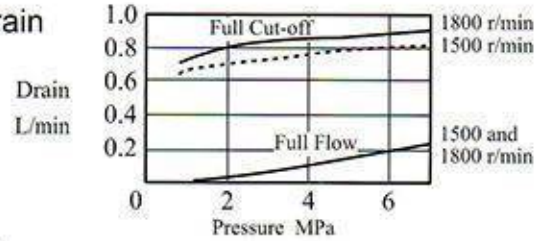

Noise Level (One meter horizontally away from pump head cover)

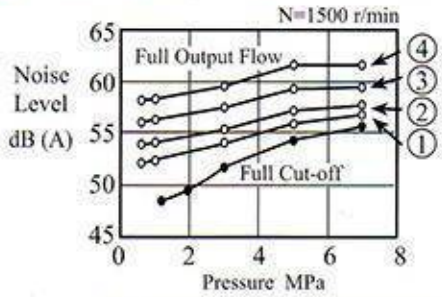

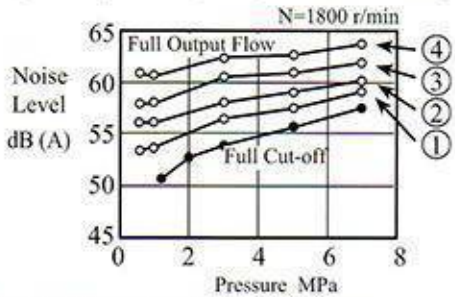

NO	Model No.
①	ARL1-6
②	ARL1-8
③	ARL1-12
④	ARL1-16

The above characteristics are based on fluid viscosity 32 mm²/s (ISO VG32 Oils, 40°C)

ARL1 Series Variable Piston Pumps

Max. Pressure 7 MPa

Performance Characteristic Curve

ARL1-6

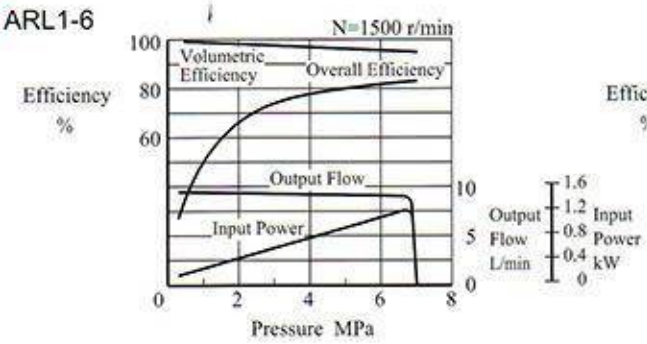

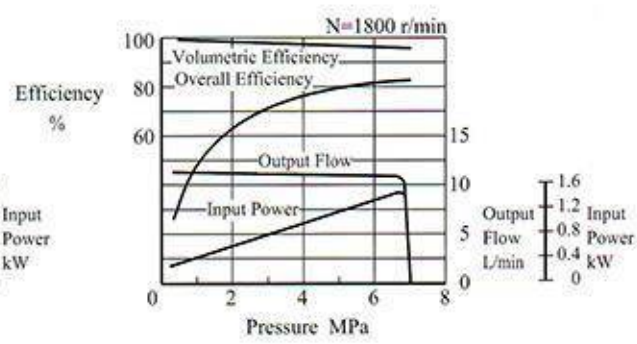

ARL1-8

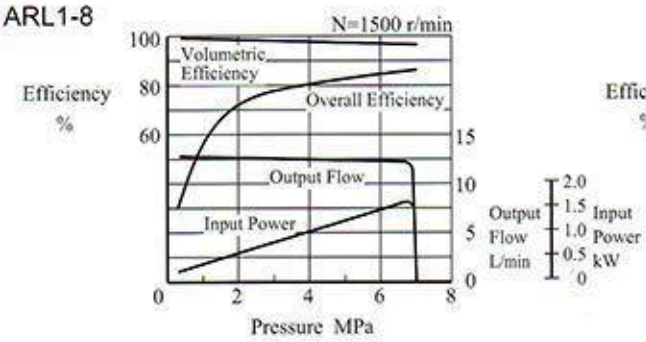

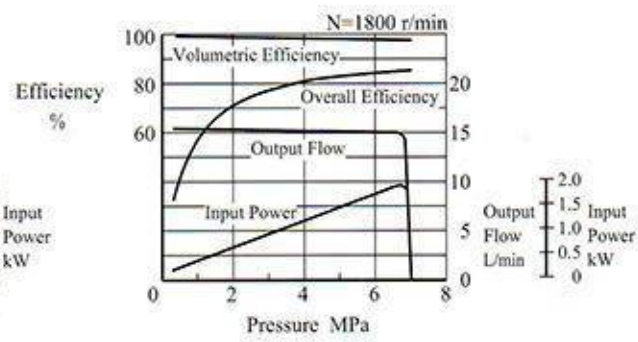

ARL1-12

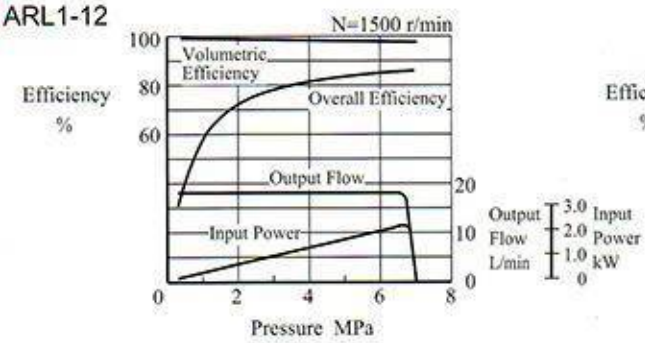

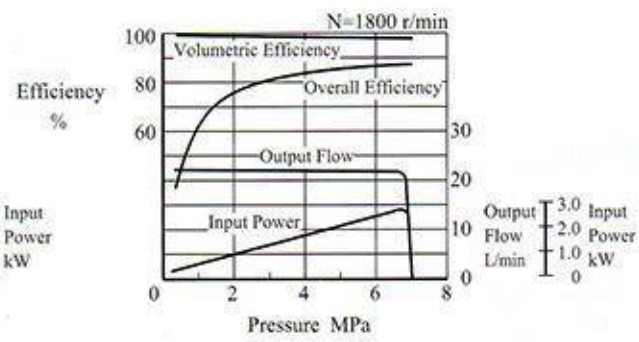

ARL1-16

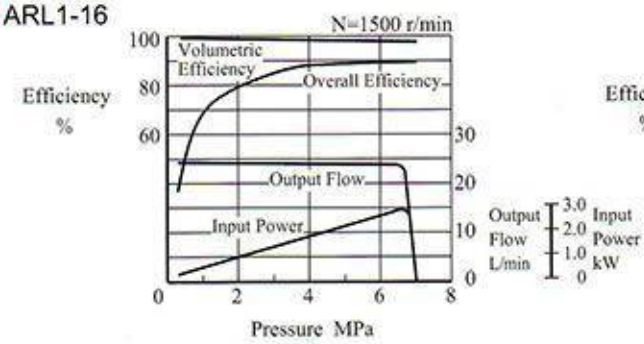

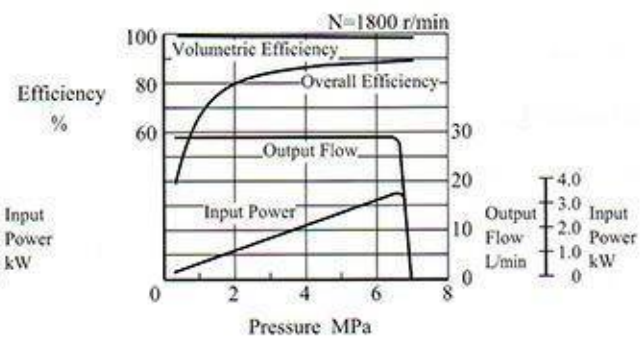

The above characteristics are based on fluid viscosity 32 mm²/s (ISO VG32 Oils, 40°C)

ARL1 Series Variable Piston Pumps

Max. Pressure 7 MPa

ARL1-※-FR01S-Flange Mtg (Mass: 6.8kg)

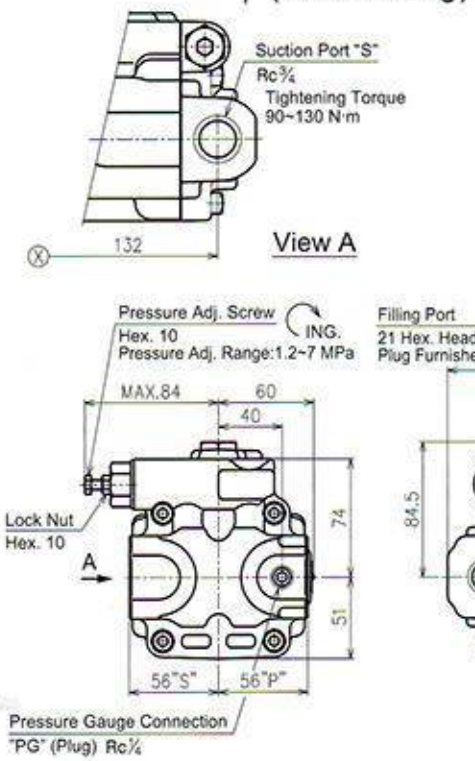

ARL1-※-LR01S-Foot Mtg (Mass: 9.0kg)

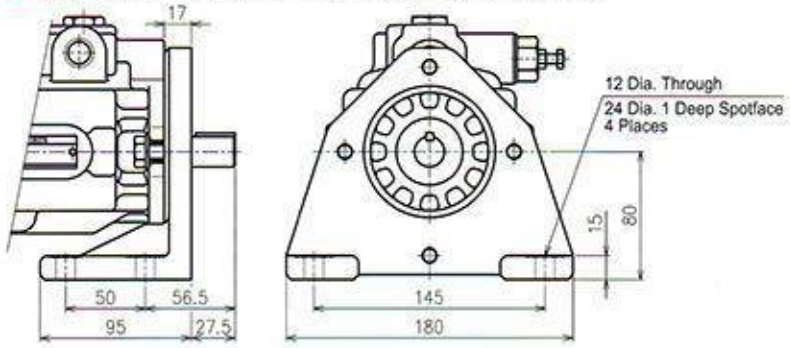

ARL1-※-FR01A-Flange Mtg(Mass: 6.8kg)

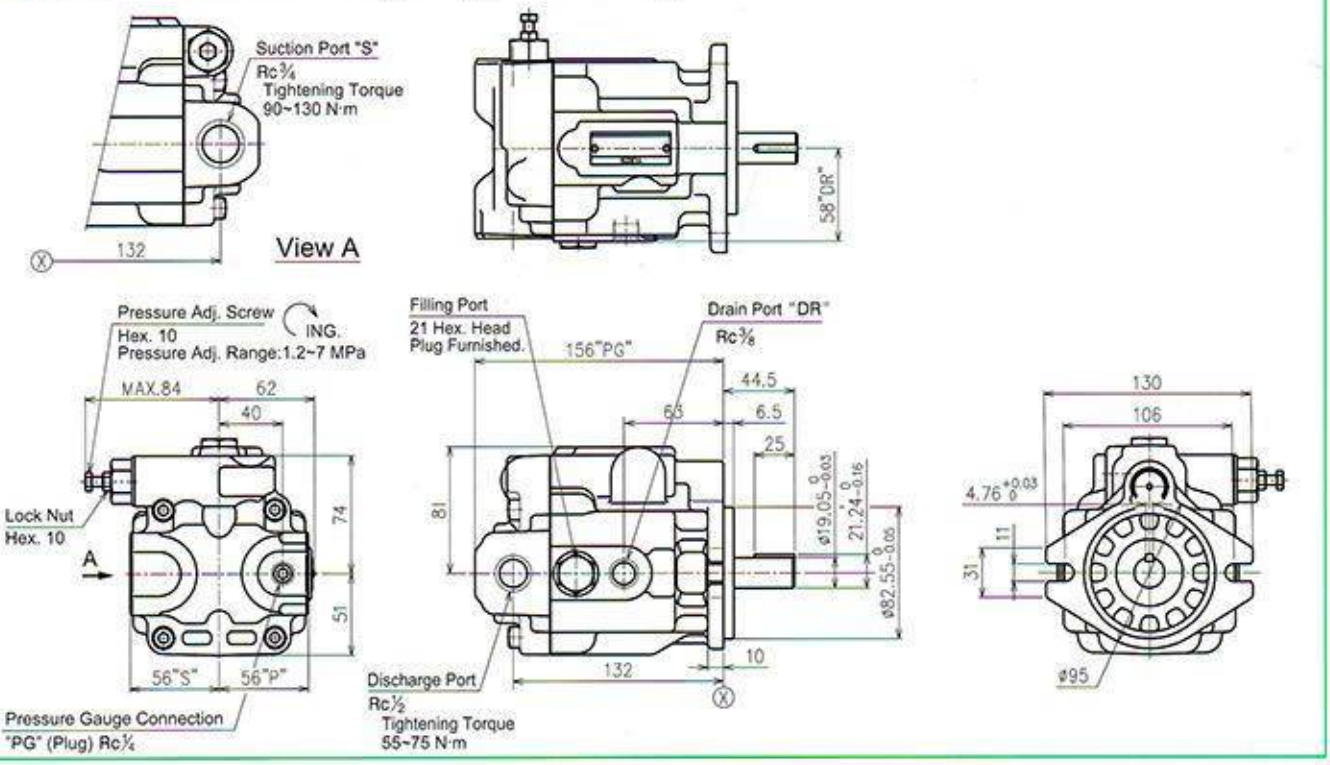

YUKEN
OIL HYDRAULIC EQUIPMENT

HYDRAULIC PUMPS

AML1 Series Motor-Pumps

Max. Pressure 7 MPa

- ARL1 series Variable Piston Pumps with the characteristic, high efficiency, beautiful, light and low noise combined with ML1 series Electric Motors to make compact Power Unit more valuable.
- Smaller in size and lighter in mass. Electric Motors with light and beautiful aluminum bodies to be combined with ARL1, the size is 40% smaller and the mass is 20% lighter than ARM series.
- Low noise: low noise electric motors combined with low noise ARL1 hydraulic pumps; therefore, the working noise of AML1 series is very low.
- ARL1 is flow rate fixed pumps with non-adjustable flow control. Please choose AML1 series according to the displacement.

Graphic Symbol

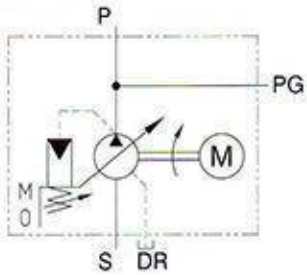

Applications :

- NC Lathes
- MC machines
- High efficiency special machines

Model Number Designation

AML1	- 16	- S	- 0.75	- 380	- A	- 1010
Series Number	Nominal Displacement	Suction Port Position	Electric Motors	Power Source	Frequency	Design No.
AML1	6 : 6.2 cm^3/ rev 8 : 8.5 cm^3/ rev 12 : 12.3 cm^3/ rev 16 : 16.3 cm^3/ rev	Suction Port Position (View from shaft end) S: Side port (Normal) A: Downwards	0.75 : 0.75 KW (Note 1) 1.5 : 1.5 KW 2.2 : 2.2 KW	None:200/200/220V(Normal) 400:400/400/440V	None: 50 / 60 / 60 Hz(Normal)	10
				220:220V 380:380V	A : 50 Hz B : 60 Hz D : 50 / 60 Hz	1010

Note 1: 12 and 16 displacement pumps are not suitable for 0.75 KW electric motors.
Note 2: Please contact us for other voltage of the power sources.

Specifications: (No. of Poles: 4P . Isolation Level : F)

Model No.	Power Source (V)	Frequency (Hz)		Rated Electric Flow (A)		Rotation Speed (r/min)		Starting Electric Flow (A)	
ML1-0.75-10	200	50	60	3.70	3.40	1410	1700	17.0	15.5
	220	-	60	-	3.35	-	1720	-	17.5
ML1-0.75-400-10	400	50	60	1.82	1.62	1420	1710	9.3	8.6
	440	-	60	-	1.62	-	1720	-	9.8
ML1-0.75-220-D-1010	220	50	60	3.52	3.35	1420	1720	18.7	17.3
ML1-0.75-380-D-1010	380	50	60	2.02	1.75	1420	1720	10.7	10.0
ML1-1.5-10	200	50	60	6.30	6.00	1410	1700	34.5	30.0
	220	-	60	-	5.60	-	1720	-	33.6
ML1-1.5-400-10	400	50	60	3.44	3.10	1420	1710	21.7	19.6
	440	-	60	-	3.02	-	1720	-	21.7
ML1-1.5-220-D-1010	220	50	60	6.27	5.62	1420	1720	37.6	35.6
ML1-1.5-380-D-1010	380	50	60	3.56	3.35	1420	1720	21.6	20.6
ML1-2.2-10	200	50	60	9.60	9.00	1410	1700	49.5	44.5
	220	-	60	-	8.50	-	1720	-	50.2
ML1-2.2-400-10	400	50	60	5.07	4.56	1420	1710	31.2	27.3
	440	-	60	-	4.41	-	1720	-	29.5
ML1-2.2-220-D-1010	220	50	60	9.15	8.45	1420	1720	57.4	50.1
ML1-2.2-380-D-1010	380	50	60	5.48	4.99	1420	1720	32.1	28.3

Note 3: Construction of the Case:Anti-foam sealed, the outside case can cool down automatically (Refer to IP54 JC4, EN60034-1:2010).
Ambient Environment Installing Place: Indoors, Elevation: Under 1000 m
Temperature: -20°C~40°C, Non-Corrosive: Explosive air or steam
Humidity: Related temperature under 100% will not become dew.

AML1 Series Motor-Pumps

Max. Pressure 7 MPa

Piston Pumps and Electric Motor Specifications

Model No.	Geometric Displacement	Min. Adj. Flow	Max. Operating Pressure	Electric Motors	Suitable Pressure Range		Mass
	cm³/rev	MPa	MPa	KW	50 Hz	60 Hz	kg
AML1-6※-0.75-※-※-10/1010	6.2	1.2	7	0.75KW x 4P	Under 5.0	Under 4.1	19.8
AML1-6※-1.5-※-※-10/1010				1.5KW x 4P	Under 7.0	Under 7.0	24.8
AML1-8※-0.75-※-※-10/1010	8.5			0.75KW x 4P	Under 3.6	Under 3.0	19.8
AML1-8※-1.5-※-※-10/1010				1.5KW x 4P	Under 7.0	Under 7.0	24.8
AML1-12※-1.5-※-※-10/1010	12.3				Under 5.0	Under 4.0	
AML1-12※-2.2-※-※-10/1010				2.2KW x 4P	Under 7.0	Under 7.0	27.3
AML1-16※-2.2-※-※-10/1010	16.3				Under 6.0	Under 5.0	

Pressure Range

The below diagram is included allowable loading capacity of motor pumps. Please choose suitable motor pumps according to the information.

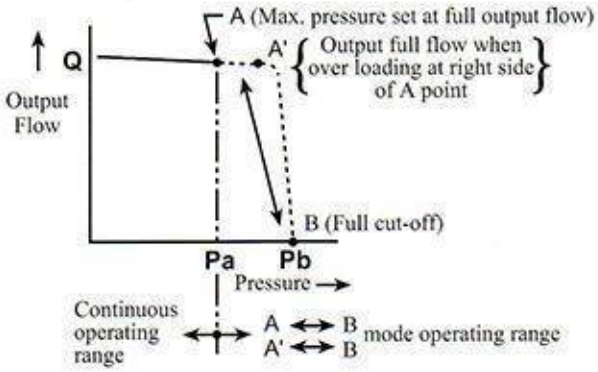

Unit : MPa

Model No.	50Hz		60Hz	
	Pa	Pb	Pa	Pb
AML1-6※-0.75-	3.8	7	2.9	7
AML1-6※-1.5-	--	7	6.9	7
AML1-6※-2.2-	--	7	--	7
AML1-8※-0.75-	2.7	3.5	2.1	3.5
AML1-8※-1.5-	6.3	7	4.9	7
AML1-8※-2.2-	--	7	--	7
AML1-12※-1.5-	4.2	7	3.4	7
AML1-12※-2.2-	6.4	7	5.2	7
AML1-16※-1.5-	3.3	7	2.6	7
AML1-16※-2.2-	4.9	7	3.9	7

- Pa: A point (When full output flow) Max setting pressure.
- Pb: B point (When full cut-off operated) Max setting pressure.

【50Hz】

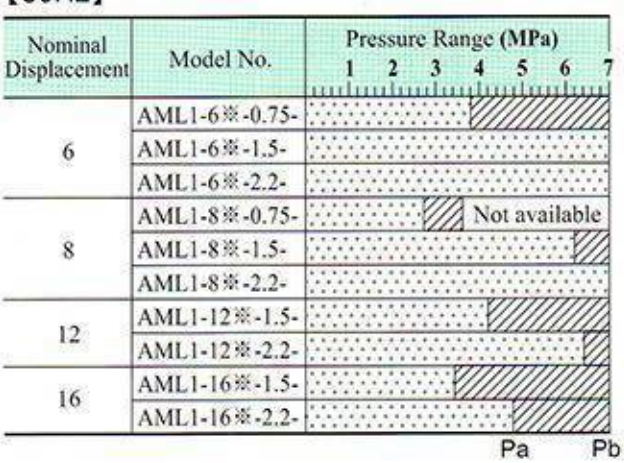

【60Hz】

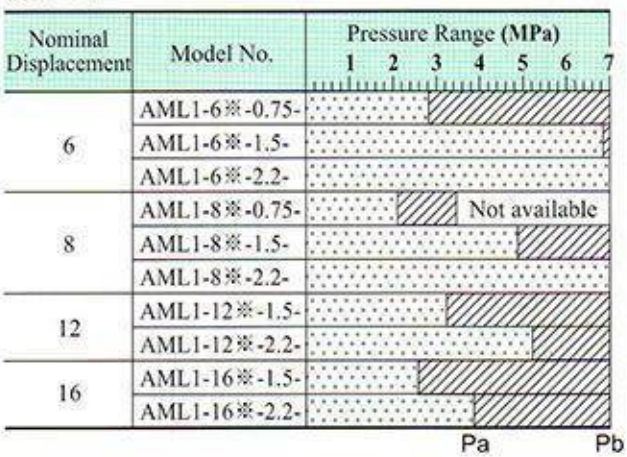

- **Continuous operating range:** The pressure range of full output flow
- **A<—>B operating range:** Included pressure range of full cut-off operating

YUKEN OIL HYDRAULIC EQUIPMENT

HYDRAULIC PUMPS

AML1 Series Motor-Pumps

Max. Pressure 7 MPa

■ AML1-※A-※-10/1010 :

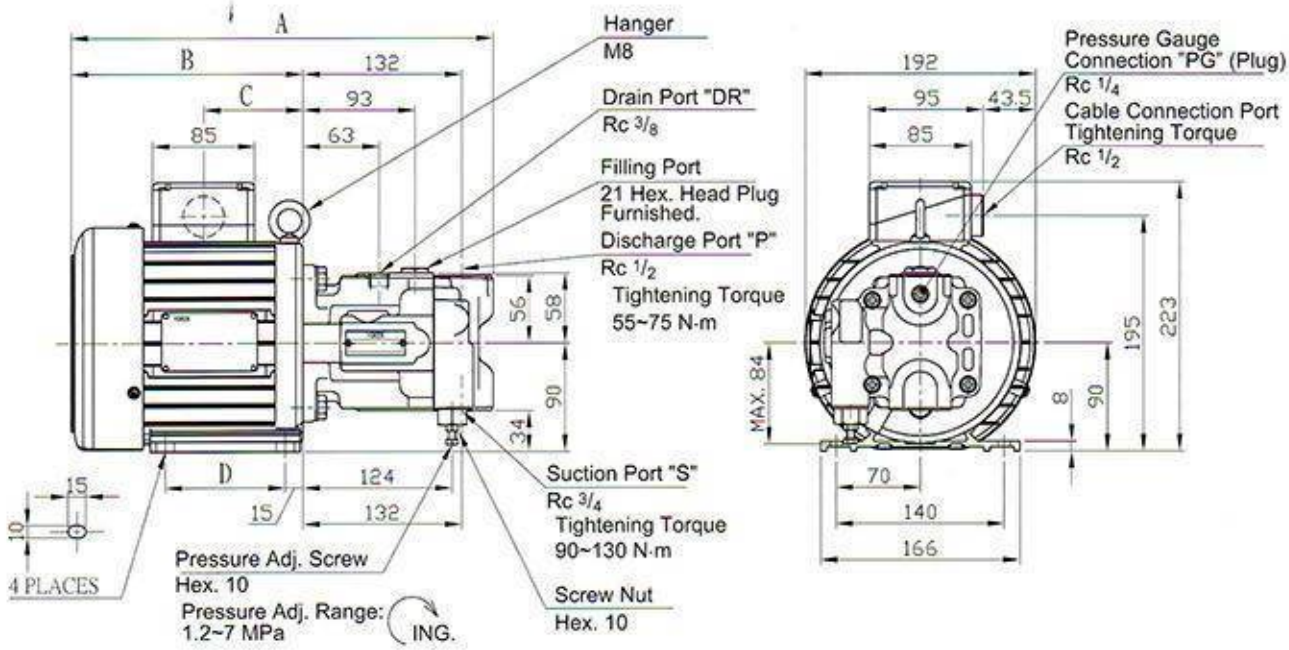

■ AML1-※S-※-10/1010 :

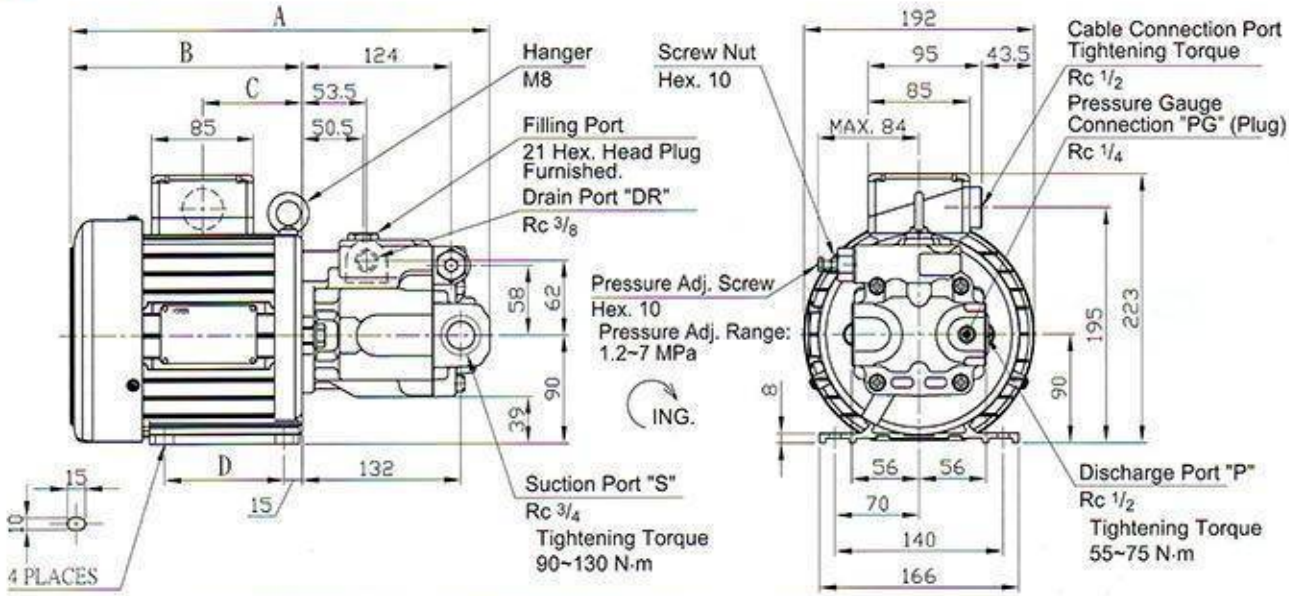

Model No.	Size (cm)				Mass kg
	A	B	C	D	
AML1-※-0.75-※-※-10 /1010	351.5	193.5	83	100	19.8
AML1-※-1.5-※-※-10 /1010	381.7	223.7	113	125	24.8
AML1-※-2.2-※-※-10 /1010	411.5	253.5	143	125	27.3

ML1 Series Electric Pumps

- Compact ML1 electric motors with high standard silicon steel have high efficiency than the ordinary electric motors and the total length is 40-50mm shorter than the standard electric motors.
- ML1 electric motors are made by light and beautiful aluminum pressed bodies. The mass is 16-35% lighter than the standard electric motors.
- Low noise: Precision-balanced adjustment, low vibration, and low noise.
- ML1-0.75/(0.75KW) was awarded CCC certificate in China.

Model Number Designation

ML1	- 0.75	- 380	- A	- 1010
Series Number	Electric Motors	Power Source	Frequency	Design No.
ML1	0.75 : 0.75 KW 1.5 : 1.5 KW 2.2 : 2.2 KW	None:200/200/220V(Normal) 400:400/400/440V	None: 50/60/60 Hz(Normal)	10
		220:220V 380:380V	A : 50 Hz B : 60 Hz D : 50 / 60 Hz	1010

Note 1: Please contact us for other voltage of power sources.

Graphic Symbol

ML1-※-※-10 / 1010

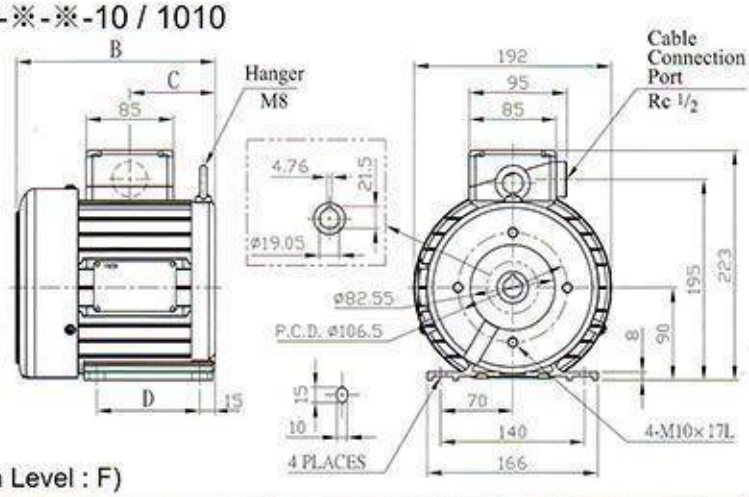

Model	Size(cm)				Mass
	A	B	C	D	kg
ML1-0.75-※-※-10 /1010	351.5	193.5	83	100	13.0
ML1-1.5-※-※-10 /1010	381.7	223.7	113	125	18.0
ML1-2.2-※-※-10 /1010	411.5	253.5	143	125	20.5

Specifications: (No. of Poles: 4P . Isolation Level : F)

Model	Power Source (V)	Frequency (Hz)		Rated Electric Flow (A)		Rotation Speed (r/min)		Starting Electric Flow (A)	
ML1-0.75-10	200	50	60	3.70	3.40	1410	1700	17.0	15.5
	220	-	60	-	3.35	-	1720	-	17.5
ML1-0.75-400-10	400	50	60	1.82	1.62	1420	1710	9.3	8.6
	440	-	60	-	1.62	-	1720	-	9.8
ML1-0.75-220-D-1010	220	50	60	3.52	3.35	1420	1720	18.7	17.3
ML1-0.75-380-D-1010	380	50	60	2.02	1.75	1420	1720	10.7	10.0
ML1-1.5-10	200	50	60	6.30	6.00	1410	1700	34.5	30.0
	220	-	60	-	5.60	-	1720	-	33.6
ML1-1.5-400-10	400	50	60	3.44	3.10	1420	1710	21.7	19.6
	440	-	60	-	3.02	-	1720	-	21.7
ML1-1.5-220-D-1010	220	50	60	6.27	5.62	1420	1720	37.6	35.6
ML1-1.5-380-D-1010	380	50	60	3.56	3.35	1420	1720	21.6	20.6
ML1-2.2-10	200	50	60	9.60	9.00	1410	1700	49.5	44.5
	220	-	60	-	8.50	-	1720	-	50.2
ML1-2.2-400-10	400	50	60	5.07	4.56	1420	1710	31.2	27.3
	440	-	60	-	4.41	-	1720	-	29.5
ML1-2.2-220-D-1010	220	50	60	9.15	8.45	1420	1720	57.4	50.1
ML1-2.2-380-D-1010	380	50	60	5.48	4.99	1420	1720	32.1	28.3

Note 3: Construction of the Case:Anti-foam sealed, The outside case can cool down automatically (Refer to IP54 JC4, EN60034-1:2010).
Ambient Environment Installing Place: Indoors, Elevation: Under 1000 m
Temperature: -20°C~40°C, Non-Corrosive: Explosive air or steam
Humidity: Related temperature under 100% will not become dew.

YUKEN
OIL HYDRAULIC EQUIPMENT

HYDRAULIC PUMPS

AR Series Variable Piston Pumps Max. Pressure 16 MPa

- Low noise and high efficiency.
- Options for Axial port and Side port.
- To save the piping of the tank and the space.

Applications:

- NC lathes, MC machines, Pipe-bending machines, Blow moulding machines, High efficiency special machines and Small hydraulic punching machines.

Graphic Symbol

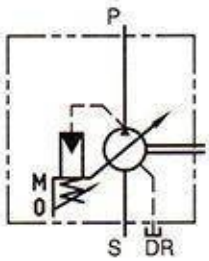

Model Number Designation

AR16 - F R 01 B S - 22

- Series Number: AR16 (15.8cm³/rev), AR22 (22.2cm³/rev)
- Type of Mounting: F: Flange Mounting, L: Foot Mounting
- Direction of Rotation (View from the shaft end): R: Clockwise (Normal)
- Control Type: 01: Pressure Compensator Valve
- Pressure Adj. Range: B : 1.2 ~ 7 MPa, C : 2.0 ~ 16 MPa
- Suction Port Position (View from shaft end): S: Side Port (Normal), None: Axial Port
- Design Number

Specifications

Model No.	Geometric Displacement cm³/rev	Min. Adj. Pressure MPa	Max Operating Pressure MPa	Rotation Speed Range r/min		Min. Adj. Flow cm³/rev	Mass kg	
				Min.	Max.		Flange Mounting	Foot Mounting
AR16※-※R01※-22	15.8	1.2	16	1800	600	AR16 : 6	12.3	14.5
AR22※-※R01※-22	22.2							
AR16※-※R01※S-22	15.8					AR22 : 8.5	13.0	15.5
AR22※-※R01※S-22	22.2							

- **Adjustment of Pressure**
  Turning the pressure adjustment screw clockwise, increases pressure.
  Volume adjusted by each full turn of the pressure adjust screw. Please tighten the screw after adjusting.

Model No.	Adjustment Volume MPa
ARL1-FR01	1.5
AR16/AR22-FR01B	2.9
AR16/AR22-FR01C	5.4

- **Adjustment of Flow** (Only for AR pumps)
  Turning the flow adjustment screw clockwise, decreases flow.
  Volume adjusted by each full turn of the flow adjust screw. Please tighten the screw after adjusting.

Model No.	Adjustable volume with each full turn of the adjustment screw cm³/rev	Minimum Adjustable flow cm³/rev
AR16	1.5	6.0
AR22	2.1	8.5

Please tighten the screw after adjusting

AR Series Variable Piston Pumps Max. Pressure 16 MPa

AR 16 Performance Characteristic Curve

Typical Pump Characteristics of "AR16" at Viscosity 20 mm²/s (ISO VG32 oils, 50°C)

Performance Characteristic Curve

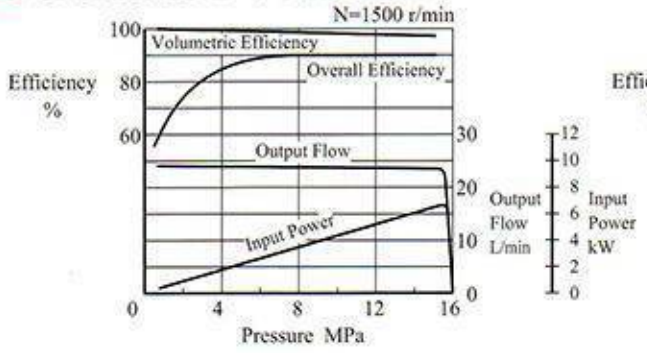

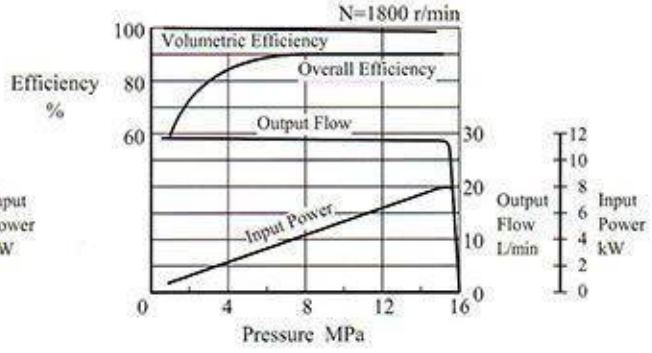

Input Power

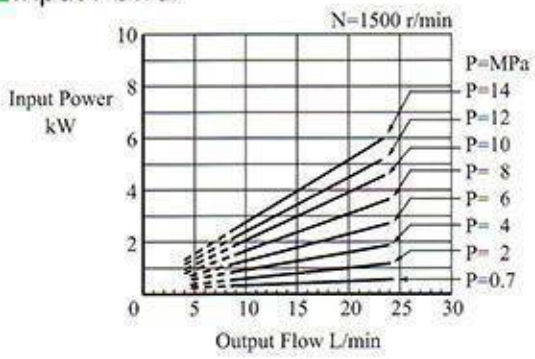

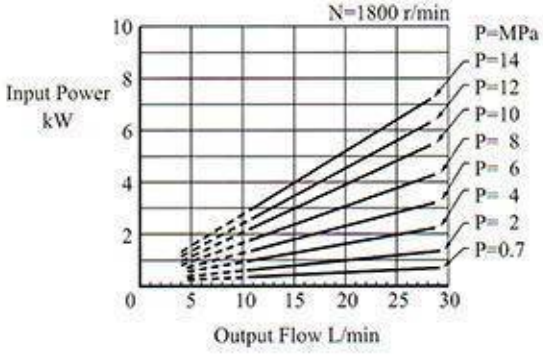

Full Cut-off Power

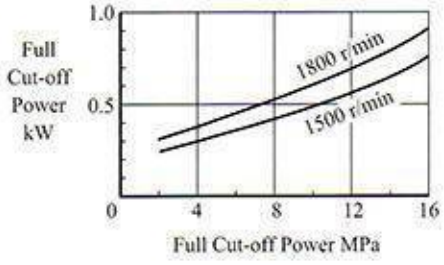

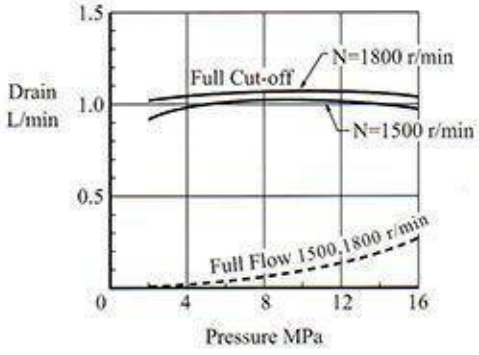

Noise Level (One meter horizontally away from pump head cover)

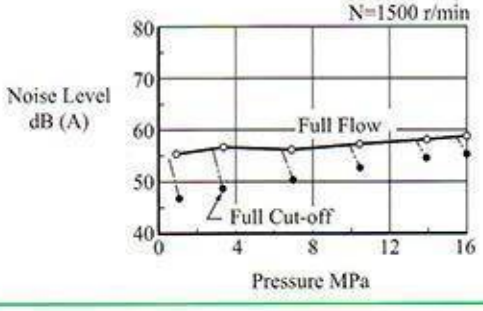

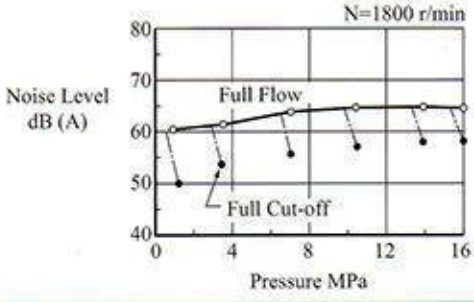

AR Series Variable Piston Pumps Max. Pressure 16 MPa

AR 22 Performance Characteristic Curve

Typical Pump Characteristics of "AR22" at Viscosity 20 mm²/s (ISO VG32 oils, 50°C)

Performance Characteristic Curve

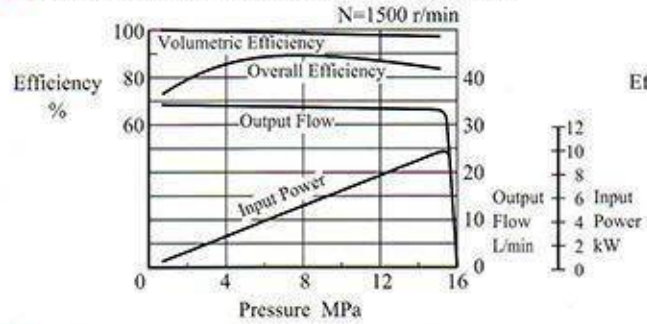

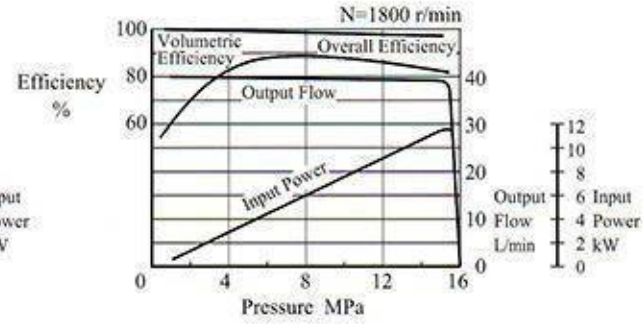

Input Power

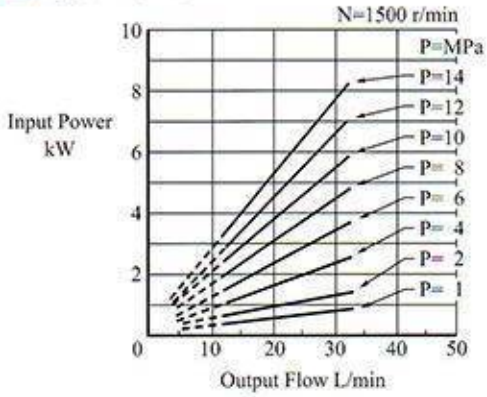

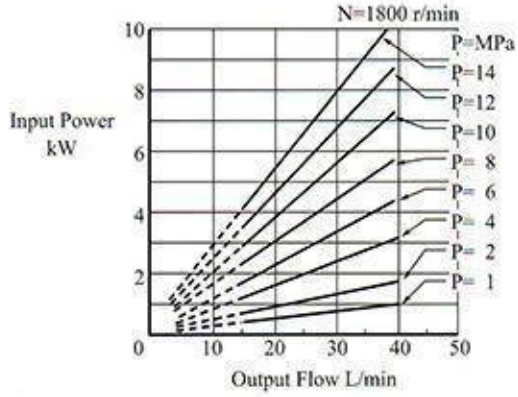

Full Cut-off Power

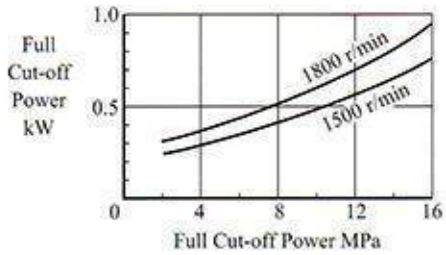

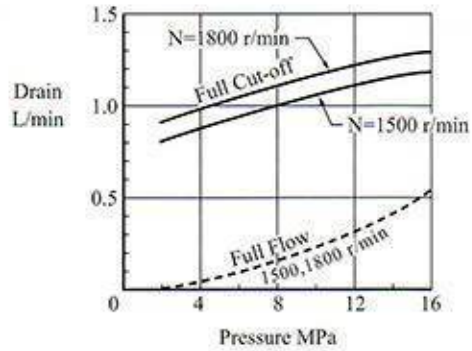

Noise Level (One meter horizontally away from pump head cover)

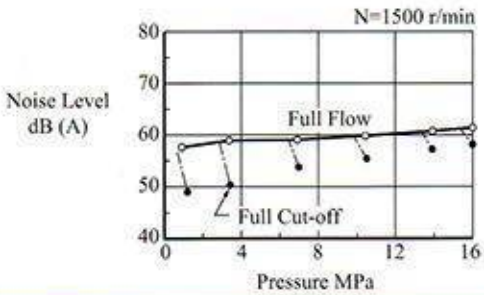

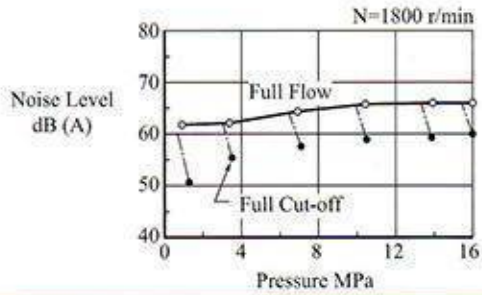

AR Series Variable Piston Pumps Max. Pressure 16 MPa

Response Characteristics

Response characteristics change in accordance with circuits and operating conditions. Please see below testing results.

Test Circuit and Conditions

• Circuit

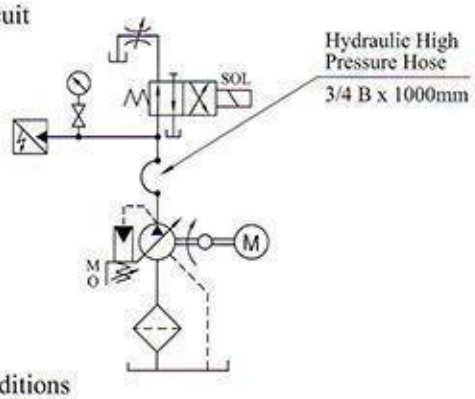

• Conditions
Drive Speed: 1500 r/min
Hydraulic Fluid: ISO VG32 oil
Oil Temperature: 50 °C
Viscosity: 20 mm²/s

Result of Measurement

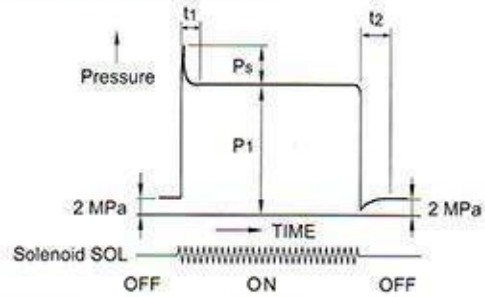

Model	Full Cut-off Pressure MPa	Response Time ms		Overshoot Pressure MPa
	P1	t_1	t_2	Ps
AR16	16	60	65	Under 5.6
AR22		70	70	Under 7.3

AR※-FR01※S-22

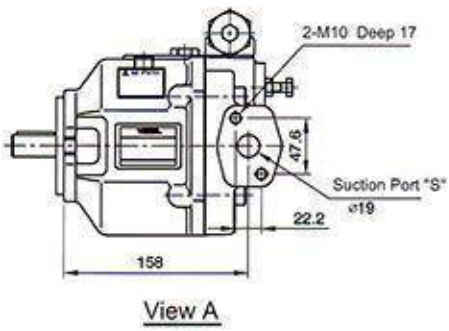

AR※-FR01※-22

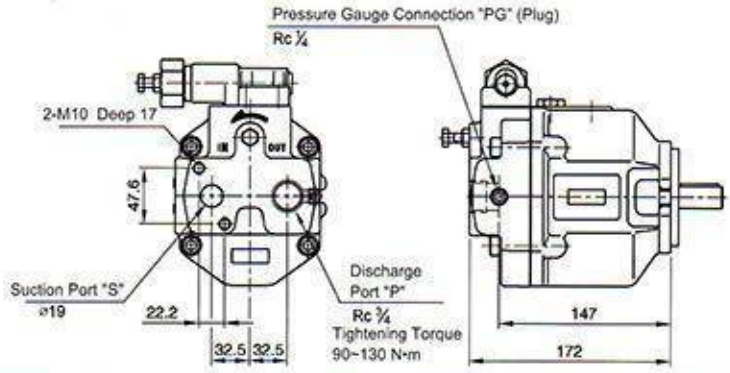

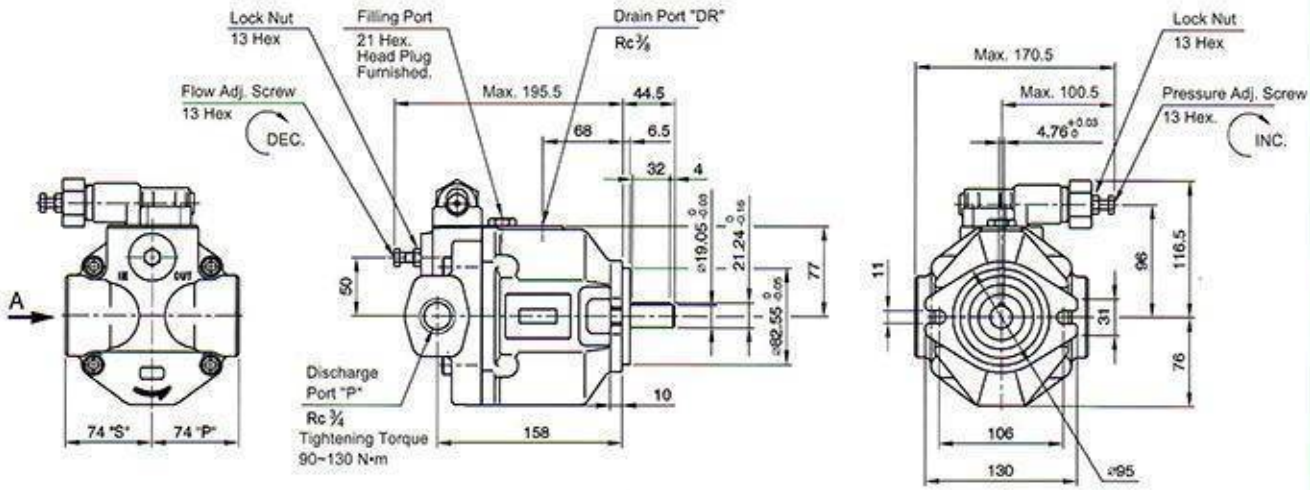

YUKEN
OIL HYDRAULIC EQUIPMENT

HYDRAULIC PUMPS

Single Vane Pumps

Max. Pressure 7 MPa

These pumps are widely used as a source of hydraulic power, owing to their features of stable performance and robust construction with a wide range of displacement.

Specifications

Model No.	Geometric Displacement cm^3/rev	Max. Pressure MPa (kgf/cm^2)	Shaft Speed Range r/min	Mass kg	
				Flange Mtg	Foot Mtg
50T-7-※-※※-30	6.8	7 (70)	*800~2000	9	10.5
50T-12-※-※※-30	11.6		*600~2000		
50T-17-※-※※-30	16.5		*600~1800		
50T-23-※-※※-30	22.9				
50T-26-※-※※-30	25.9				
50T-36-※-※※-30	36.0				
150T-48-※-※※-40	47.7	7 (70)	600~1500	25	26
150T-61-※-※※-40	61.1				
150T-75-※-※※-40	74.9				
150T-94-※-※※-40	93.6		600~1200		
150T-116-※-※※-40	115.6				

*For starting at low speed, the maximum viscosity is limited. Please refer to page 8 for details (Table 2).

Graphic Symbol

Model Number Designation

50 T-7-L-R L-※

- Series Number 50, 150
- Type of Connection
  T : Threaded Connection
- Nominal Displacement cm^3/rev
- Type of Mounting
  L : Foot Mounting
  F : Flange Mounting
- Shaft Rotation(Viewed from shaft end)
  R : Clockwise (Normal)
  L : Anti-clockwise
- Discharge Port Position
  (View from shaft end)
  L: Left (Normal)
  R: Right
- Design Number

50 T

Foot Mtg.

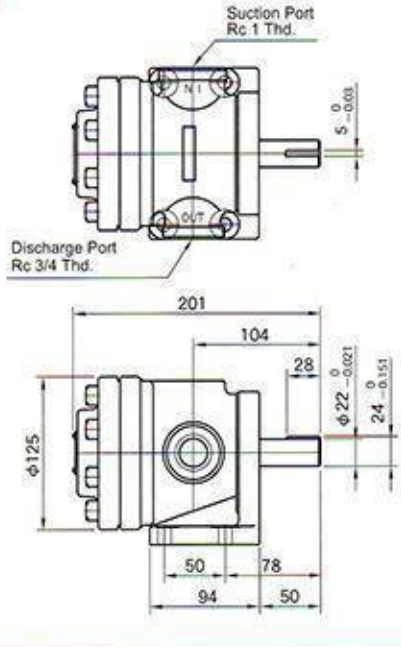

Flange Mtg.

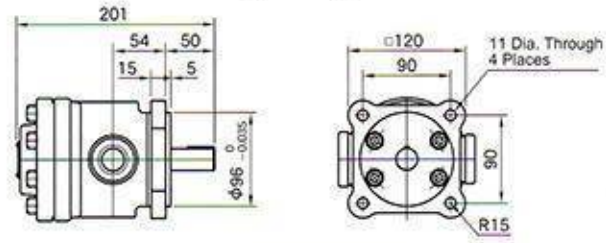

For other dimensions, please refer to "Foot Mtg."

Single Vane Pumps

Max. Pressure 7 MPa

150 T

Foot Mtg.

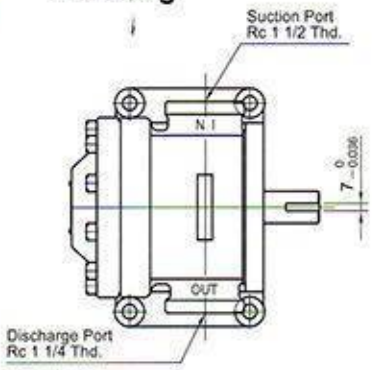

Flange Mtg.

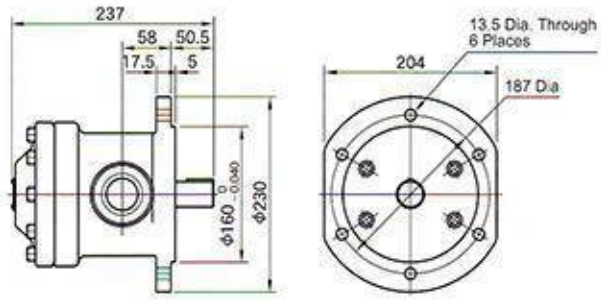

For other dimensions, please refer to "Foot Mtg."

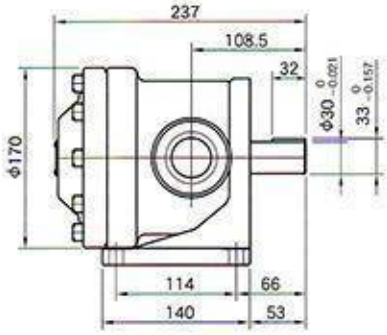

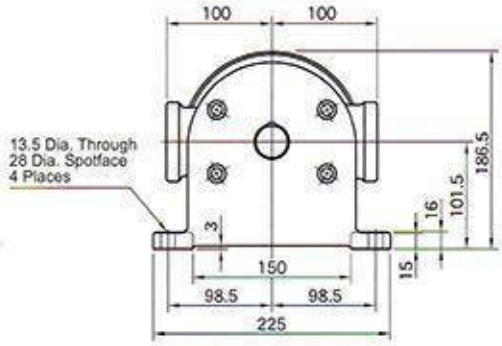

Pressure—Output Flow · Input Power Characteristics

Fluid Viscosity 20 mm²/s (ISO VG32 Oils, 50°C) 1 MPa=10.2 kgf/m²

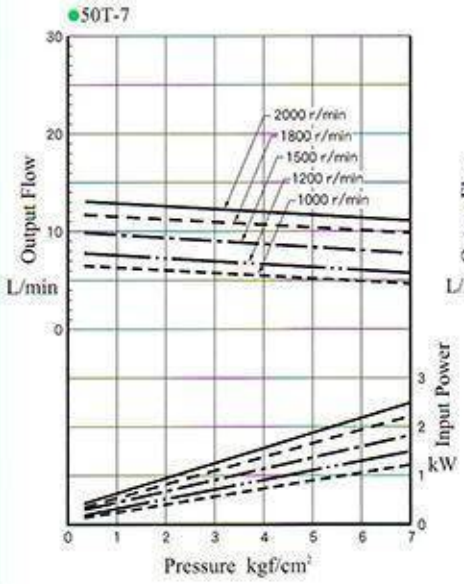

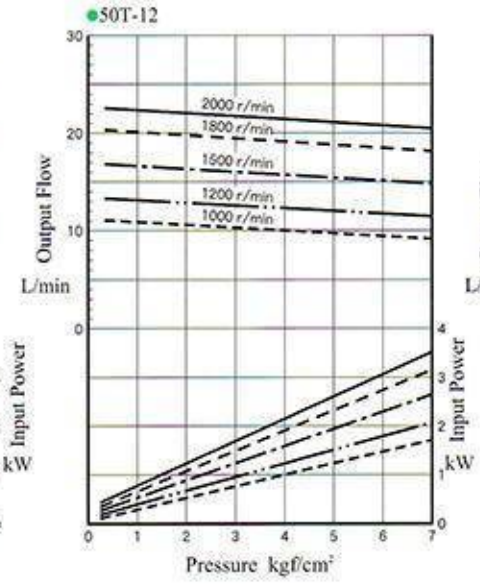

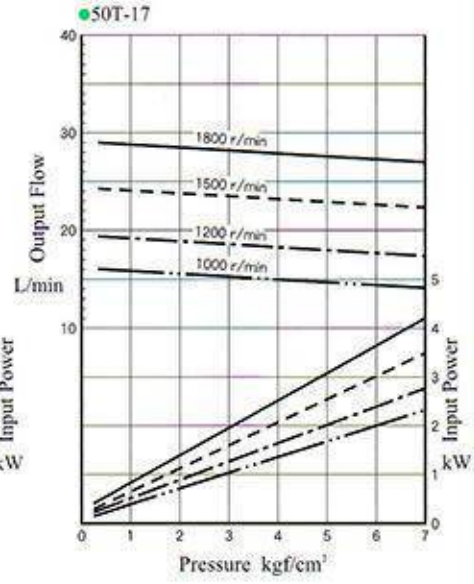

YUKEN OIL HYDRAULIC EQUIPMENT

HYDRAULIC PUMPS

Single Vane Pumps

Max. Pressure 7 MPa

Pressure—Output Flow · Input Power Characteristics

Fluid Viscosity 20 mm²/s (ISO VG32 Oils, 50°C) 1 MPa=10.2 kgf/m²

●50T-23

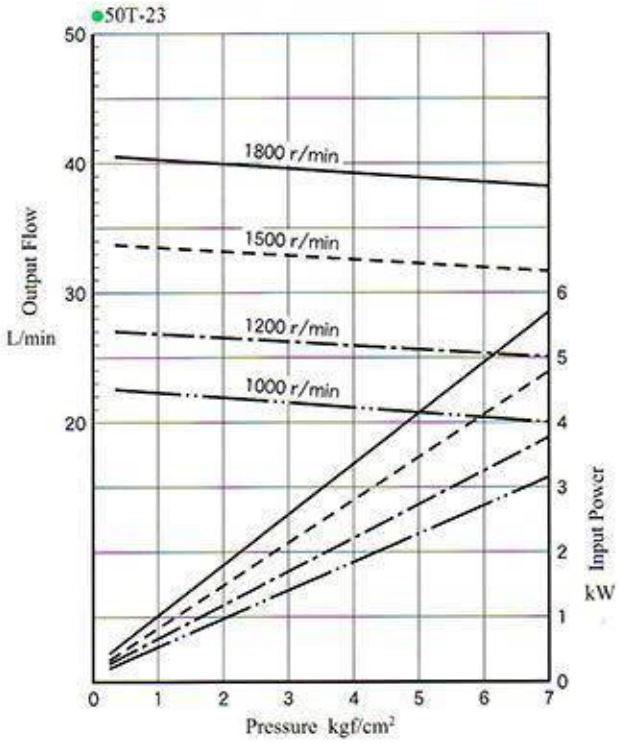

●50T-26

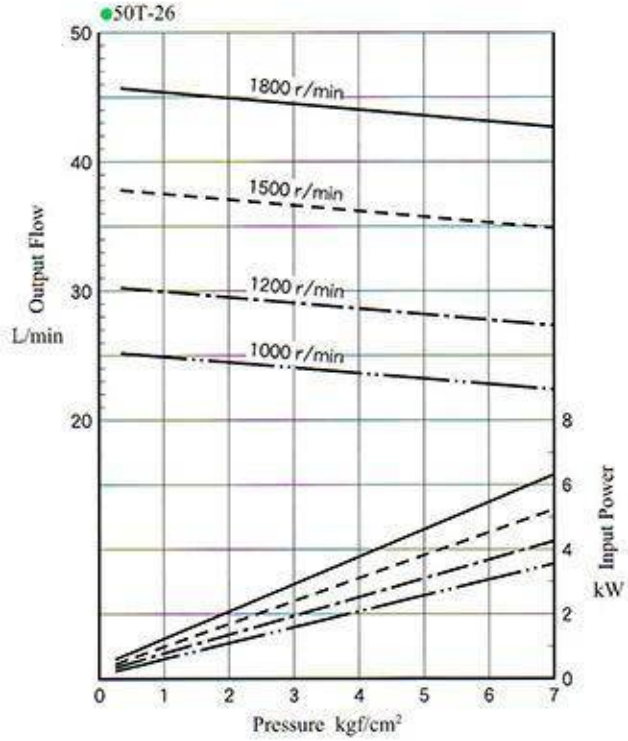

●50T-36

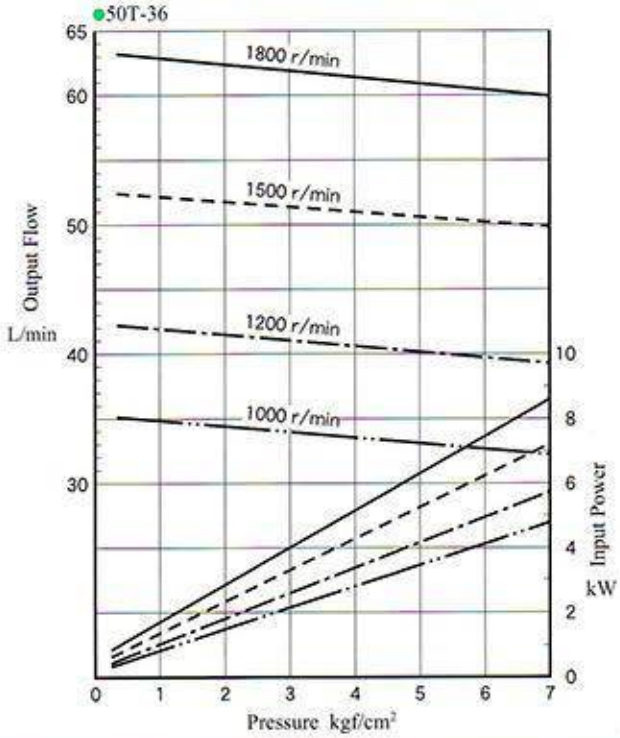

●150T-48

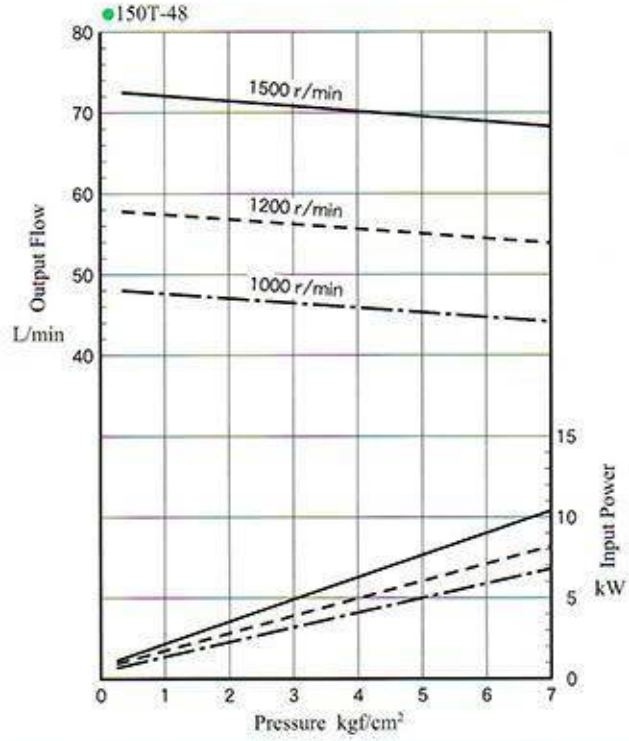

Single Vane Pumps

Max. Pressure 7 MPa

Pressure—Output Flow · Input Power Characteristics

Fluid Viscosity 20 mm²/s (ISO VG32 Oils, 50°C) 1 MPa=10.2 kgf/m²

●150T-61

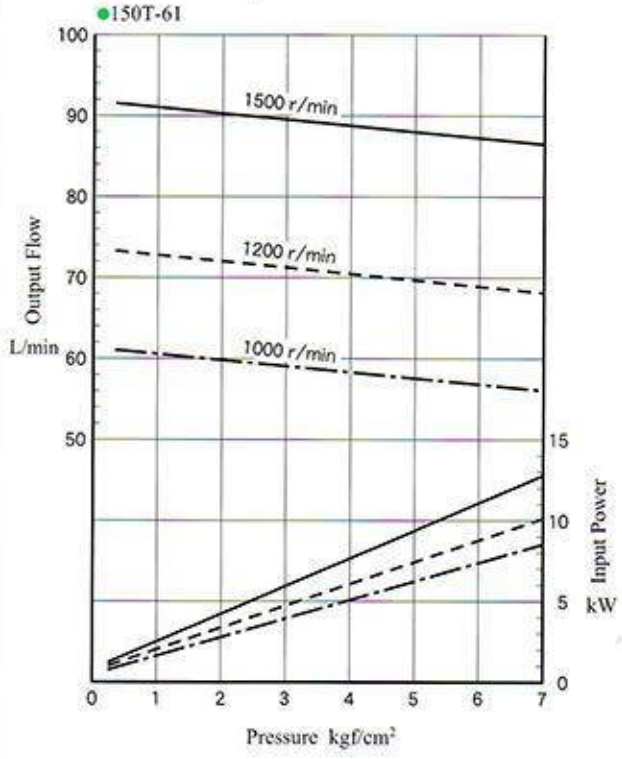

●150T-75

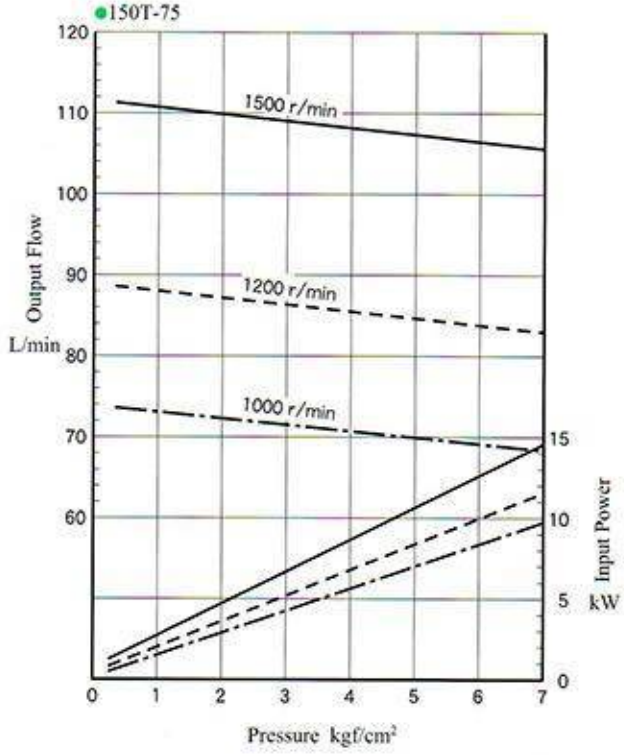

●150T-94

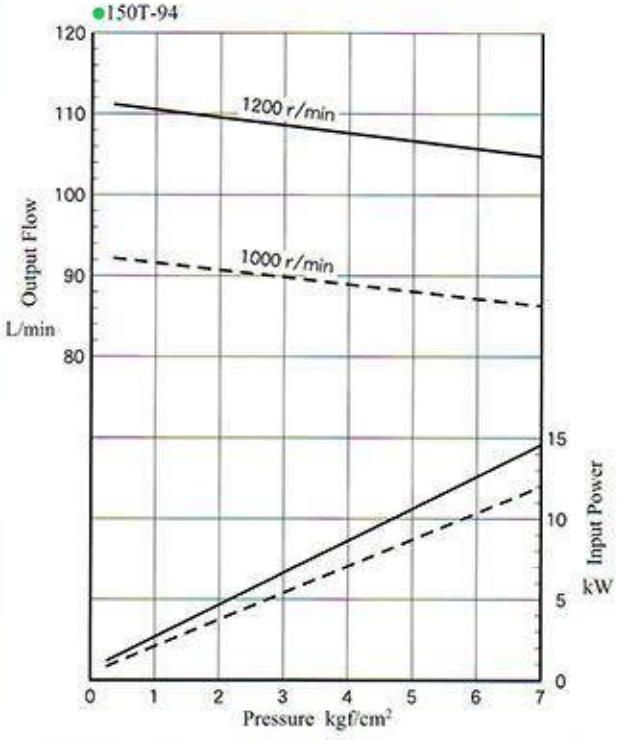

●150T-116

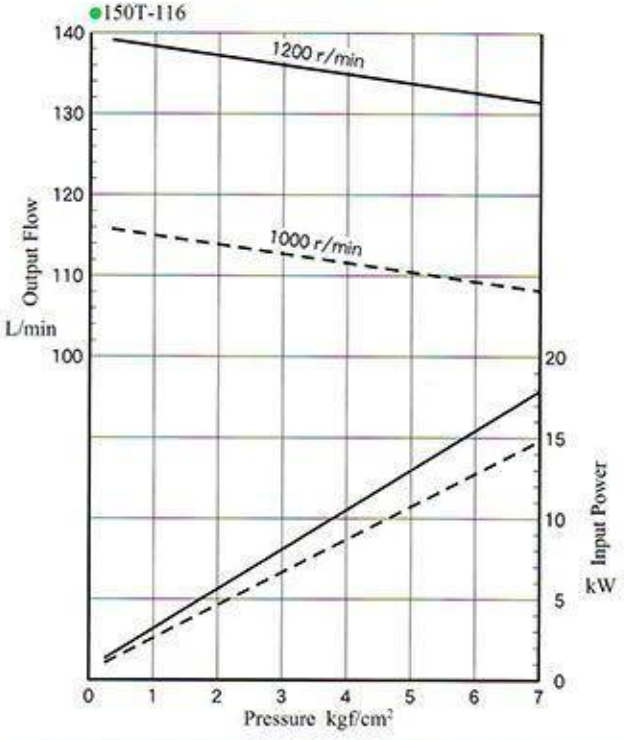

YUKEN
OIL HYDRAULIC EQUIPMENT

HYDRAULIC PUMPS

PV2R Series Single Vane Pumps Max. Pressure 21 MPa

- The pumps with high pressure and high quality, have been developed especially for low noise operation.
- The pumps can be used on various applications including injection moulding machines and machine tools...etc, with output range: 5.8～237 cm³/rev.
- The pump cartridge kit is assembled by screws, so it is easy to assemble and maintain.

Graphic Symbol

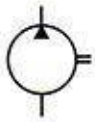

Specifications

Model No.	Geometric Displacement cm³/rev	Max. Pressure MPa (kgf/cm²)	Shaft Speed Range r/min	Mass kg Flange Mtg	Mass kg Foot Mtg
*3 PV2R1- 6-※-※※※-43	5.8	21 (210)	*1 750~1800	9.0	11.2
*3 PV2R1- 8-※-※※※-43	8.0				
PV2R1-10-※-※※※-43	9.4				
PV2R1-12-※-※※※-43	12.2				
PV2R1-14-※-※※※-43	13.7				
PV2R1-17-※-※※※-4326	16.6				
PV2R1-19-※-※※※-4326	18.6				
PV2R1-23-※-※※※-4326	22.7				
PV2R1-25-※-※※※-4326	25.3				
PV2R1-31-※-※※※-4326	31.0	16 (160)			
PV2R2-26-※-※※※-41	26.6	21 (210)	*1 600~1800	19.0	23.3
PV2R2-33-※-※※※-41	33.3				
PV2R2-41-※-※※※-41	41.3				
PV2R2-47-※-※※※-41	47.2				
PV2R2-53-※-※※※-41	52.5				
PV2R2-59-※-※※※-41	58.2				
PV2R2-65-※-※※※-41	64.7				
PV2R2-75-※-※※※-4103	75	16 (160)			
PV2R3-60-※-※※※-31	59.6	21 (210)	600~1800	36.7	46.7
PV2R3-66-※-※※※-31	66.3				
PV2R3-76-※-※※※-31	76.4				
PV2R3-85-※-※※※-3103	85				
PV2R3-94-※-※※※-31	93.6				
PV2R3-108-※-※※※-3103	108	17.5 (175)			
PV2R3-116-※-※※※-31 *2	115.6	16 (160)			
PV2R3-125-※-※※※-3103	125	14 (140)			
PV2R4-136-※-※※※-30	136	17.5 (175)	600~1800	68.5	93.5
PV2R4-153-※-※※※-30	153				
PV2R4-184-※-※※※-30	184				
PV2R4-200-※-※※※-30	201				
PV2R4-237-※-※※※-30 *2	237				

*1.For starting at low speed of shaft rotation, the maximum viscosity is limited. Please refer to page 8 (Table 2) for details.
*2.When operating with a shaft speed exceeding 1700rpm, the suction pressure is restricted. Please refer to page 8 (Table 1) for details.
*3.When pressure is over 16 MPa (160 kgf/cm²), raise the speed of shaft rotation to more than 1450 rpm.

- Anti-wear type petroleum hydraulic fluids are recommended to use with these pumps.
- For pressure - output flow & input power characteristics, please refer to page 28-34.

Model Number Designation

PV2R2-41-F-R A A-※

- Series Number
- Nominal Displacement cm³/rev
- Type of Mounting
  - L : Foot mounting
  - F : Flange Mounting
- Shaft Rotation (Viewed from shaft end)
  - R : Clockwise(Normal)
  - L : Anti-clockwise
- Discharge Port Position (View from shaft end)
  - A : Upwards(Normal)
  - B : Downwards
  - R : Right
  - L : Left
- Suction Port Position (Viewed from shaft end)
  - A : Upwards(Normal)
  - B : Downwards
  - R : Right
  - L : Left
- Design Number

* Flange mounting is available for A only

Pipe Flange Kits

Pump Model	Name of Ports	Pipe Flange Kit Model No.
PV2R1	Suction	F5-08-A-10T
	Discharge	F5-04-A-10T
PV2R2	Suction	F5-10-A-10T
	Discharge	F5-06-A-10T
PV2R3	Suction	F5-16-A-10T
	Discharge	F5-10-A-10T
PV2R4	Suction	F5-24-B-10T
	Discharge	F5-12-B-10T

- In Pipe Flange Kit Model No. A: Threaded Connection / B: For Pipe Socket Welding.
- Details of the pipe flange kit please refer to page 50.
- When ordering, please specify pipe flange kit model.

PV2R Series Single Vane Pumps Max. Pressure 21 MPa

Noise Level (Example)

Measuring Conditions

Fluid viscosity: 20 cSt
Measurement position: One meter horizontally from pump head cover
Background noise: 40 dB(A)

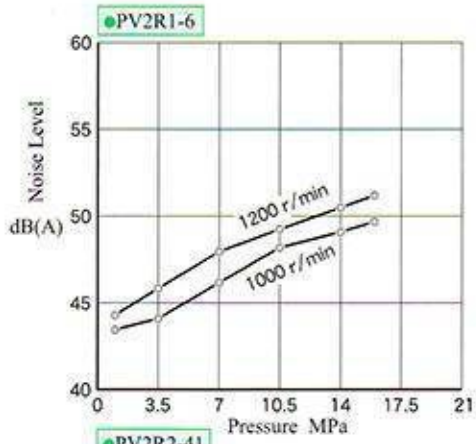

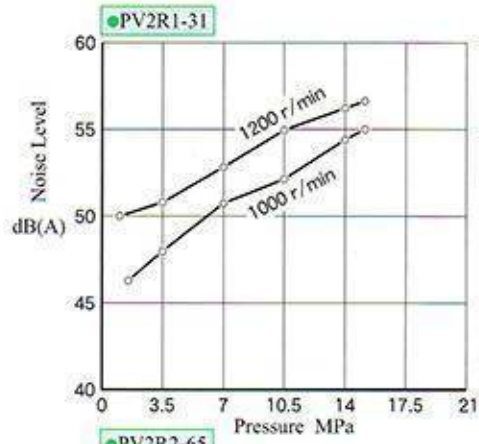

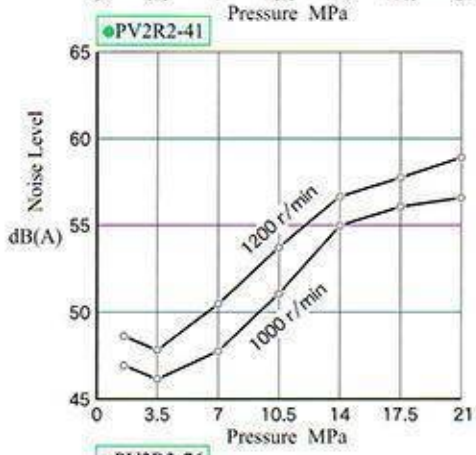

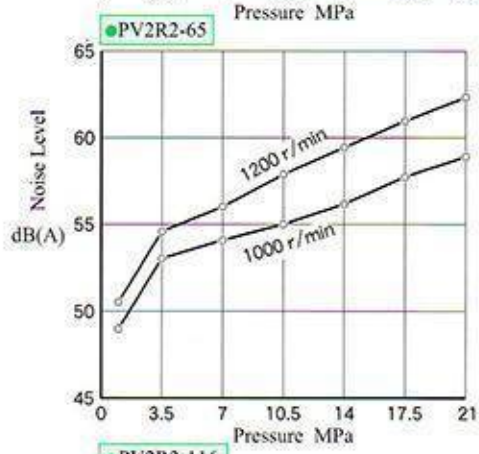

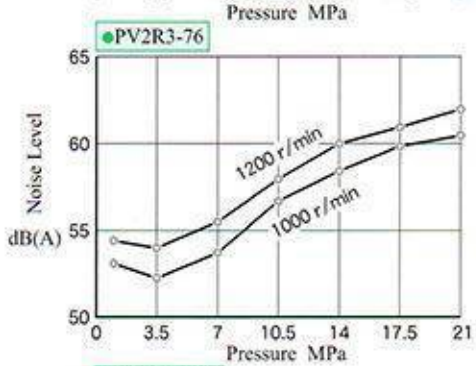

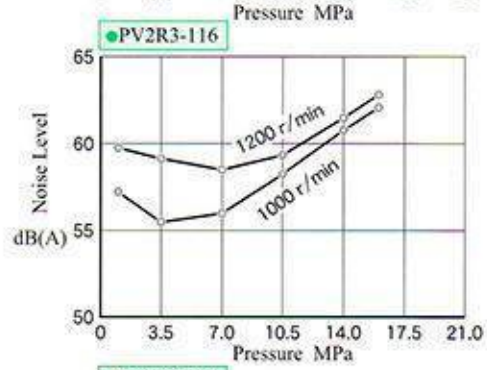

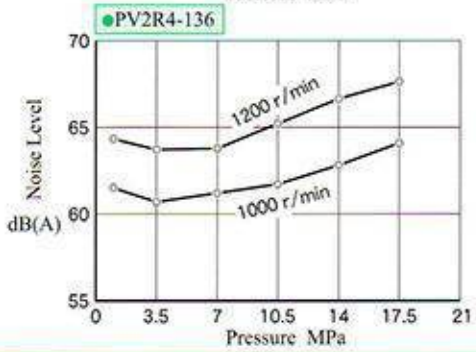

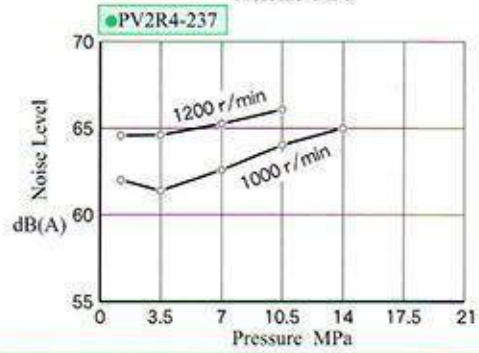

YUKEN OIL HYDRAULIC EQUIPMENT

HYDRAULIC PUMPS

PV2R Series Single Vane Pumps Max. Pressure 21 MPa

PV2R1

Flange Mtg.

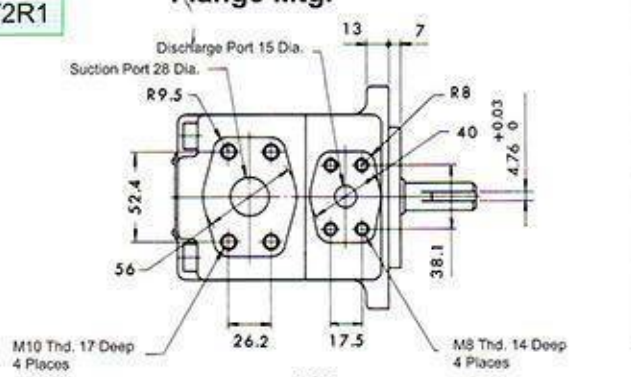

Foot Mtg.

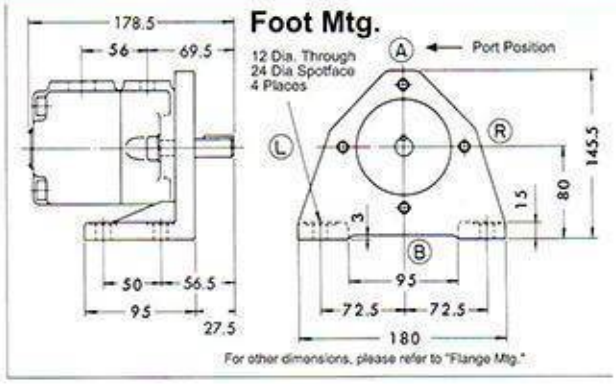

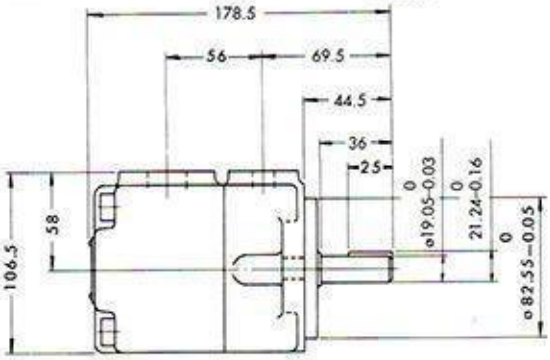

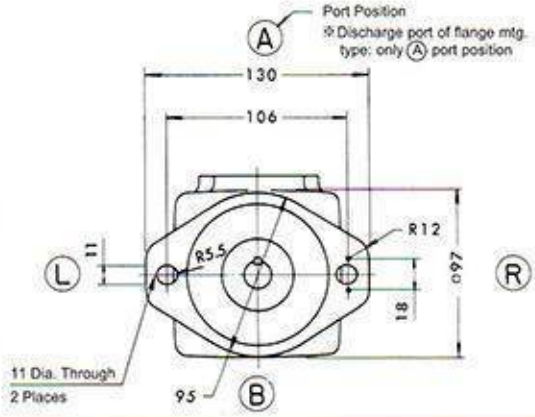

PV2R2

Flange Mtg.

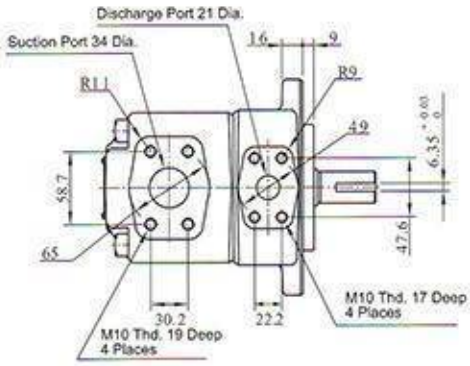

Foot Mtg.

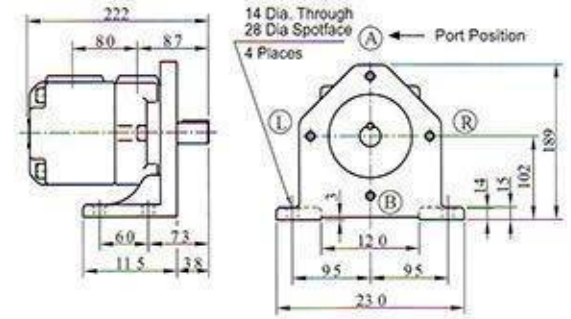

For other dimensions, please refer to "Flange Mtg."

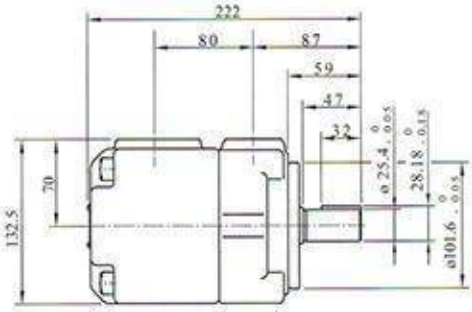

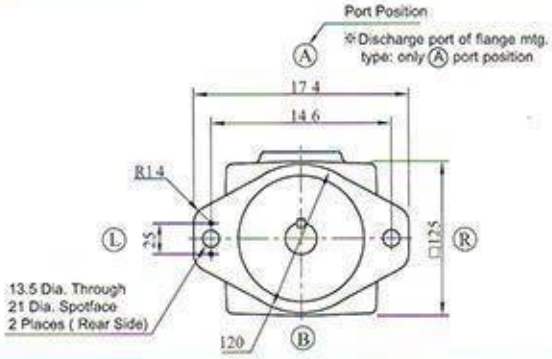

PV2R Series Single Vane Pumps

Max. Pressure 21 MPa

PV2R3

Flange Mtg.

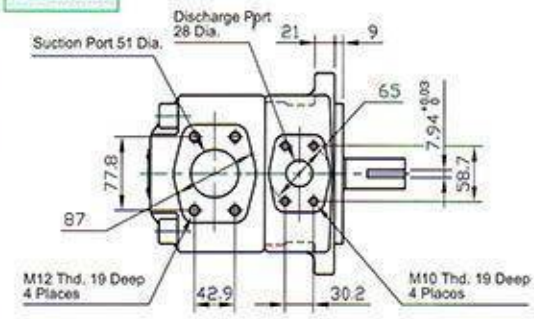

Foot Mtg.

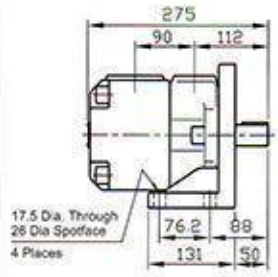

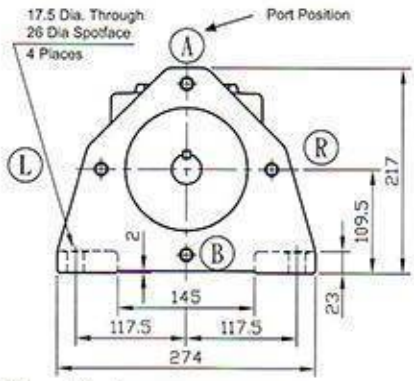

For other dimensions, please refer to "Flange Mtg."

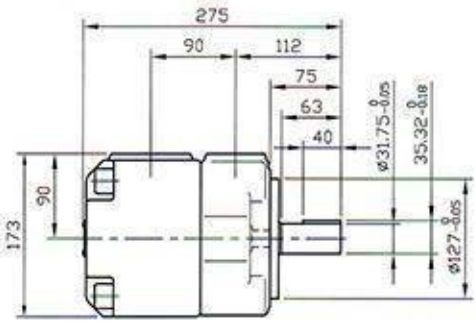

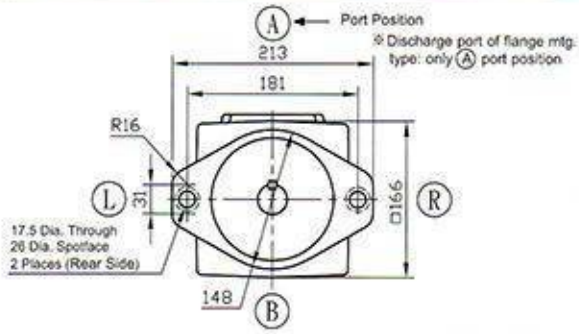

PV2R4

Flange Mtg.

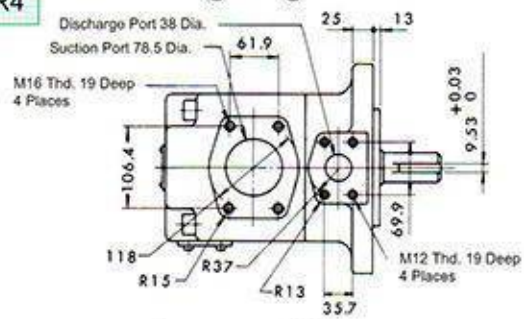

Foot Mtg.

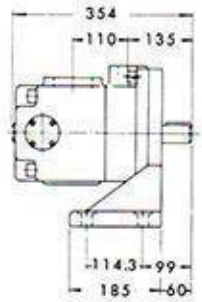

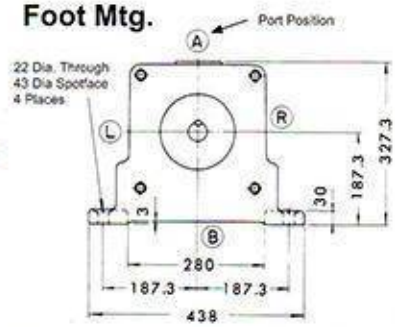

For other dimensions, please refer to "Flange Mtg."

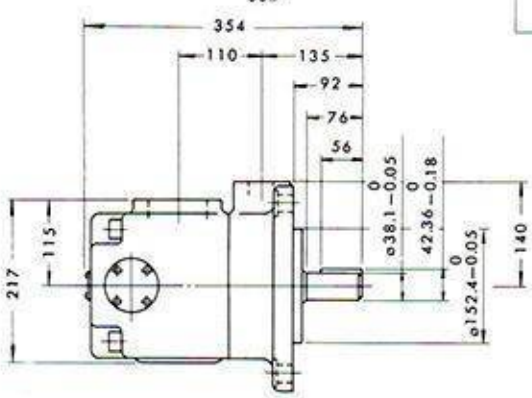

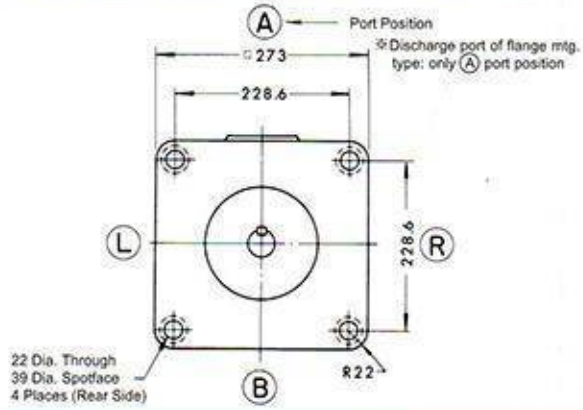

(S)-PV2R Series Single Vane Pumps Max. Pressure 21 MPa

Pressure – Output Flow · Input Power Characteristics
Fluid Viscosity 20 mm²/s (ISO VG32 Oils, 50°C)

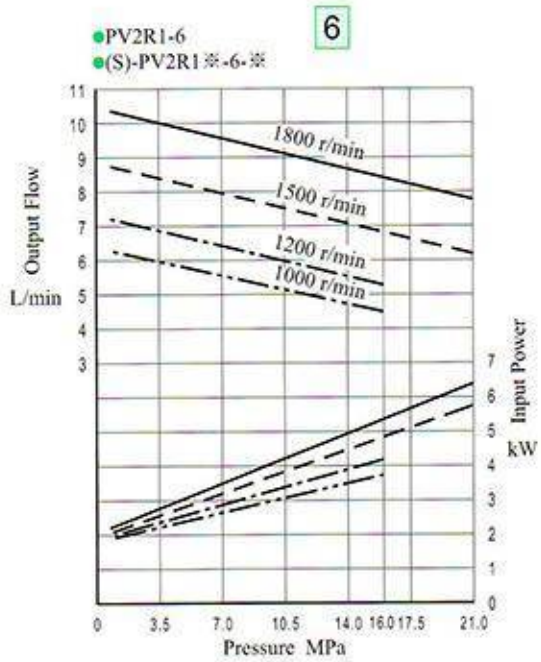

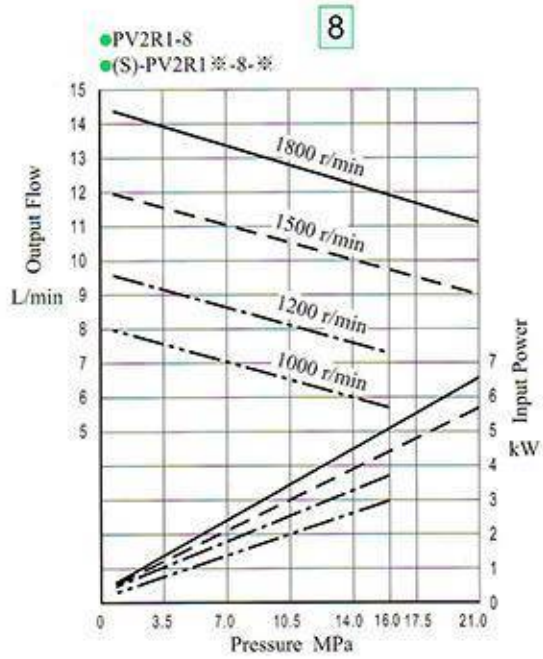

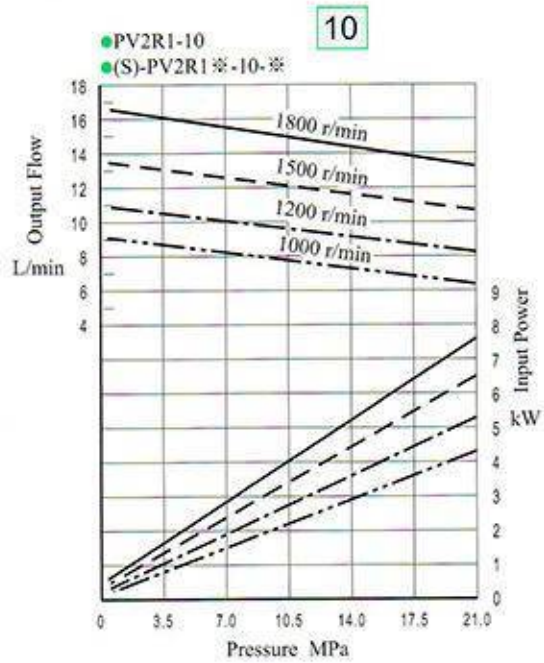

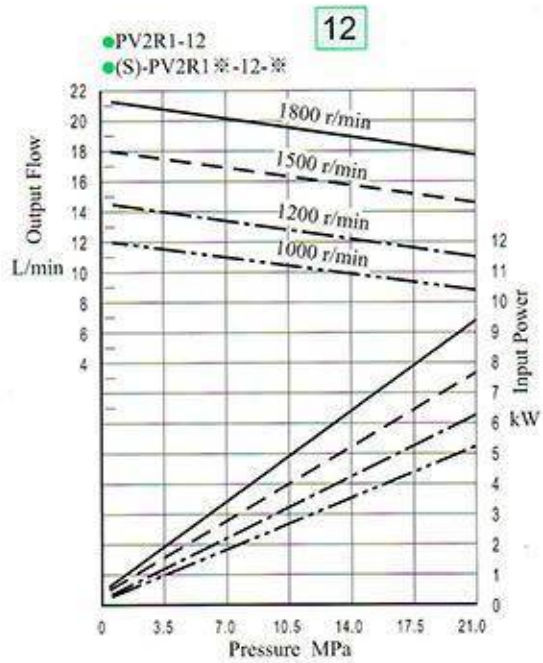

(S)-PV2R Series Single Vane Pumps Max. Pressure 21 MPa

Pressure—Output Flow › Input Power Characteristics
Fluid Viscosity 20 mm²/s (ISO VG32 Oils, 50°C)

14

●PV2R1-14
●(S)-PV2R1※-14-※

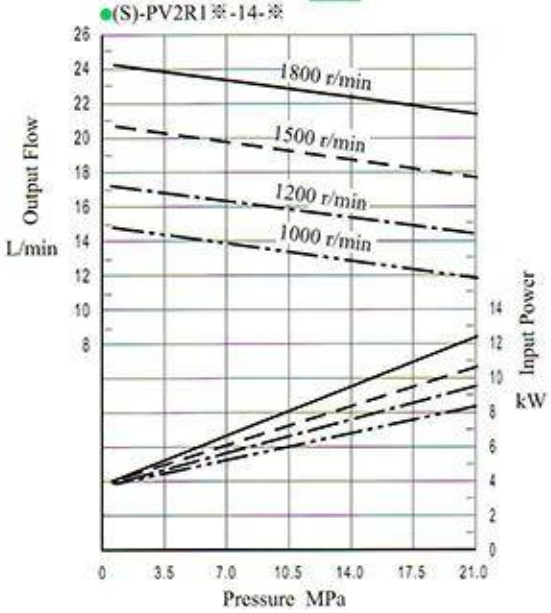

17

●PV2R1-17
●(S)-PV2R1※-17-※

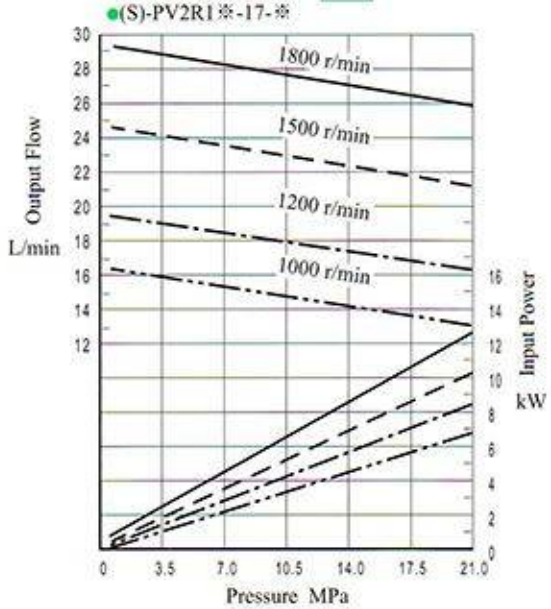

19

●PV2R1-19
●(S)-PV2R1※-19-※

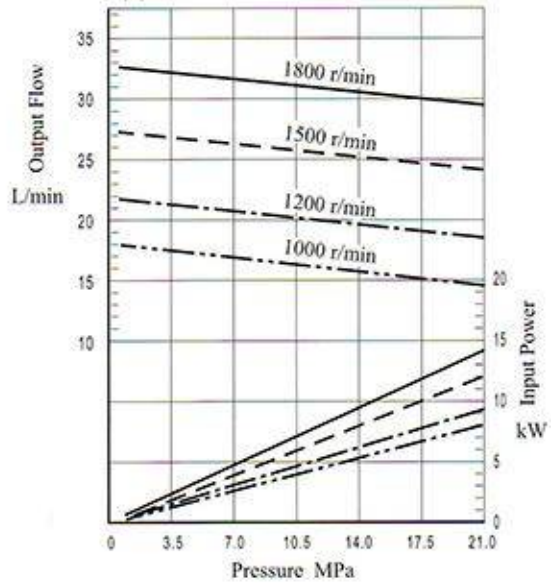

23

●PV2R1-23
●(S)-PV2R1※-23-※

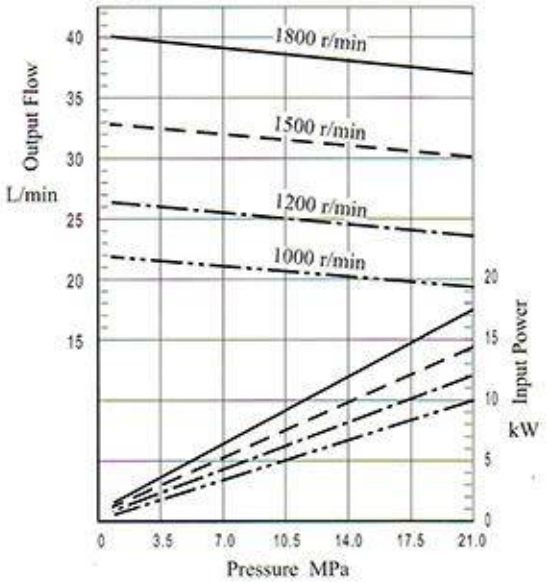

(S)-PV2R Series Single Vane Pumps Max. Pressure 21 MPa

Pressure—Output Flow · Input Power Characteristics
Fluid Viscosity 20 mm²/s (ISO VG32 Oils, 50°C)

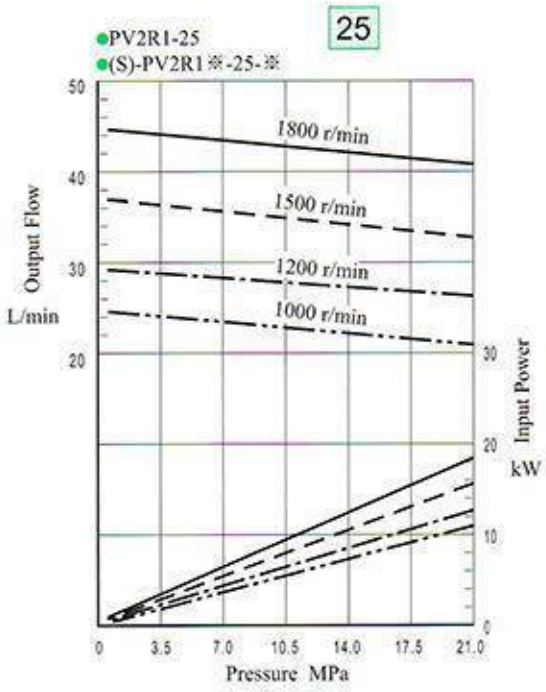

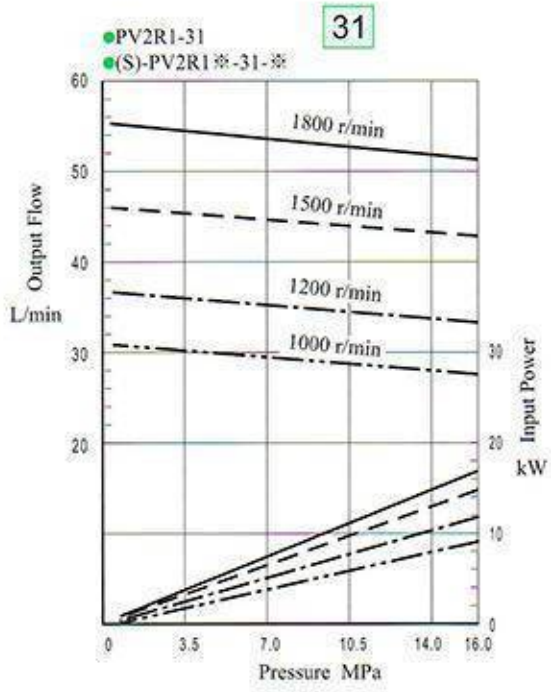

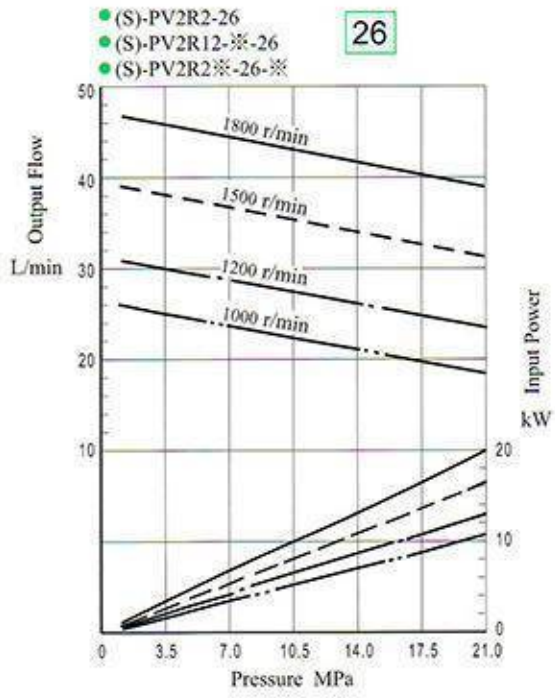

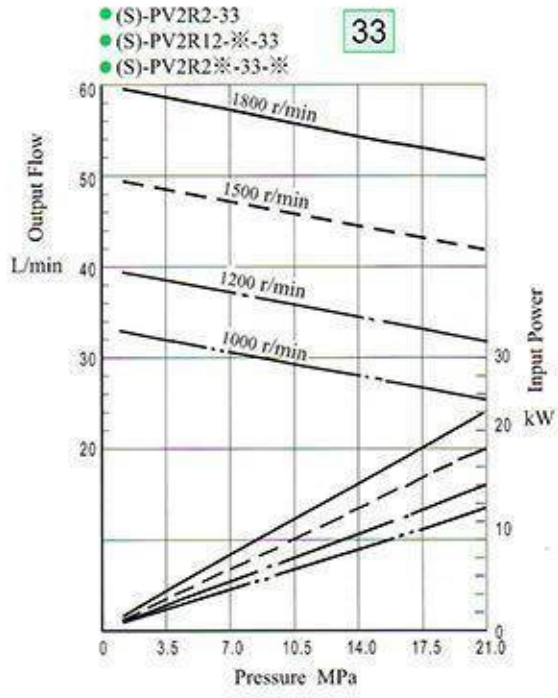

(S)-PV2R Series Single Vane Pumps Max. Pressure 21 MPa

Pressure—Output Flow · Input Power Characteristics
Fluid Viscosity 20 mm²/s (ISO VG32 Oils, 50°C)

●(S)-PV2R2-41
●(S)-PV2R12-※-41
●(S)-PV2R2※-41-※

41

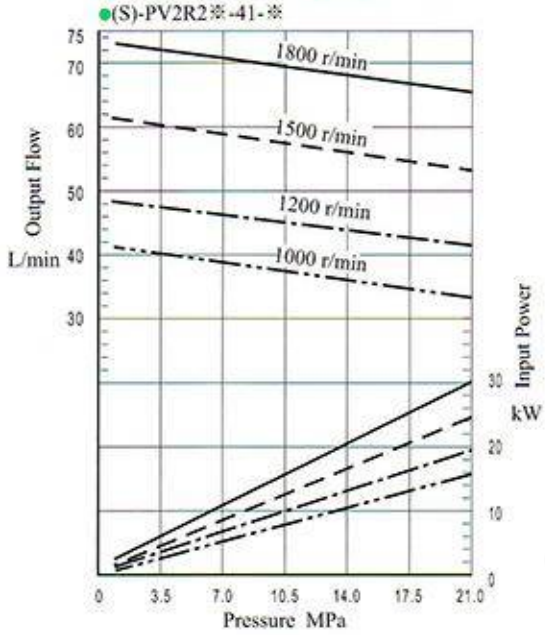

●(S)-PV2R2-47
●(S)-PV2R12-※-47
●(S)-PV2R2※-47-※

47

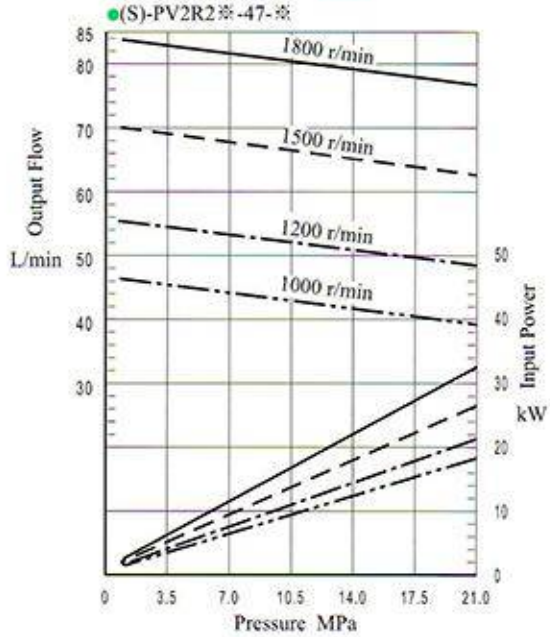

●(S)-PV2R2-53
●(S)-PV2R12-※-53
●(S)-PV2R2※-53-※

53

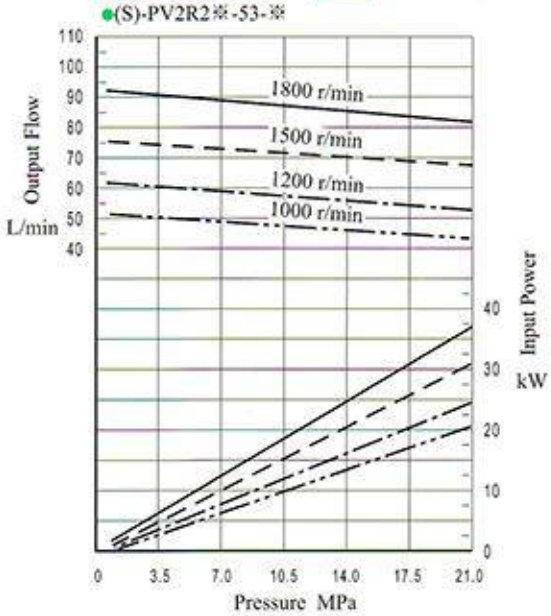

●(S)-PV2R2-59
●(S)-PV2R12-※-59
●(S)-PV2R2※-59-※

59

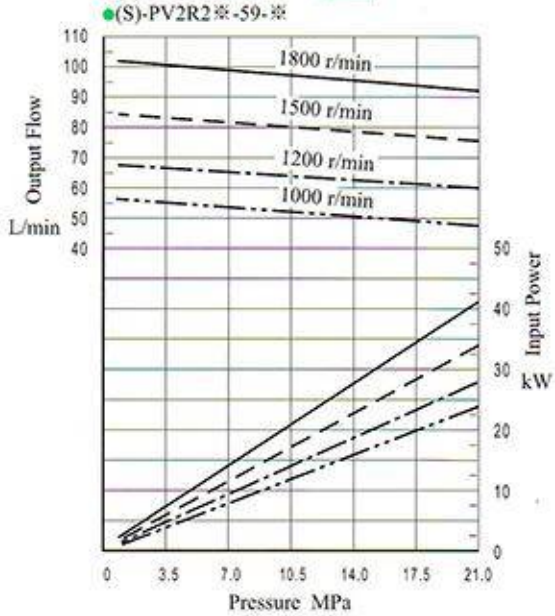

(S)-PV2R Series Single Vane Pumps Max. Pressure 21 MPa

Pressure—Output Flow · Input Power Characteristics
Fluid Viscosity 20 mm²/s (ISO VG32 Oils, 50°C)

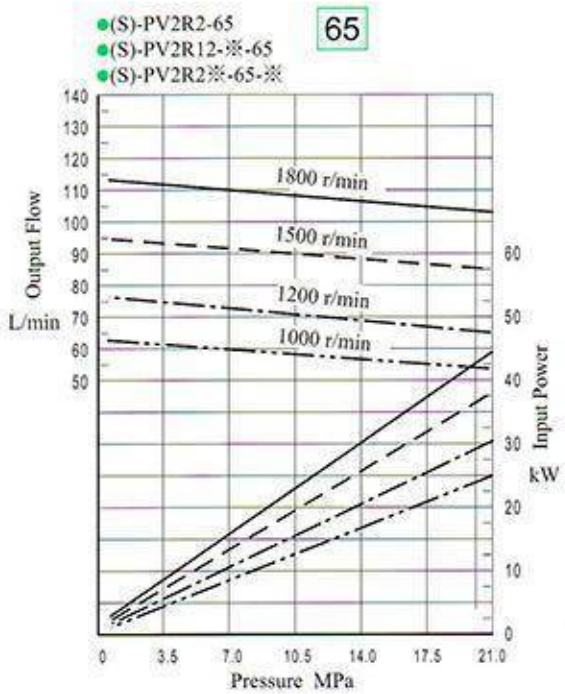

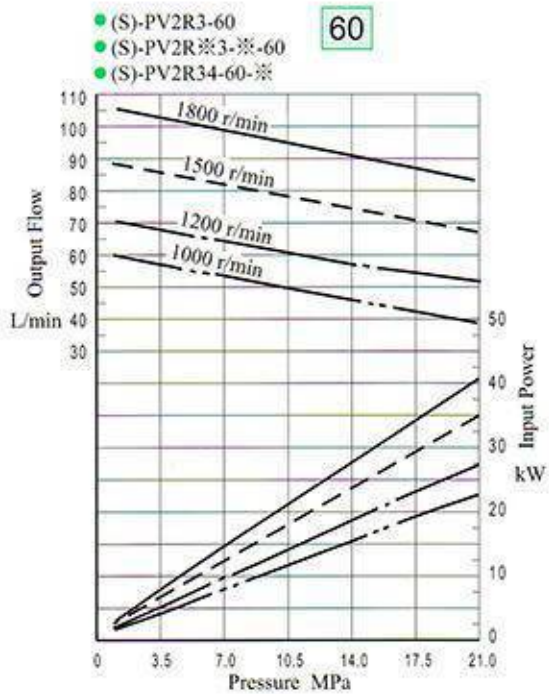

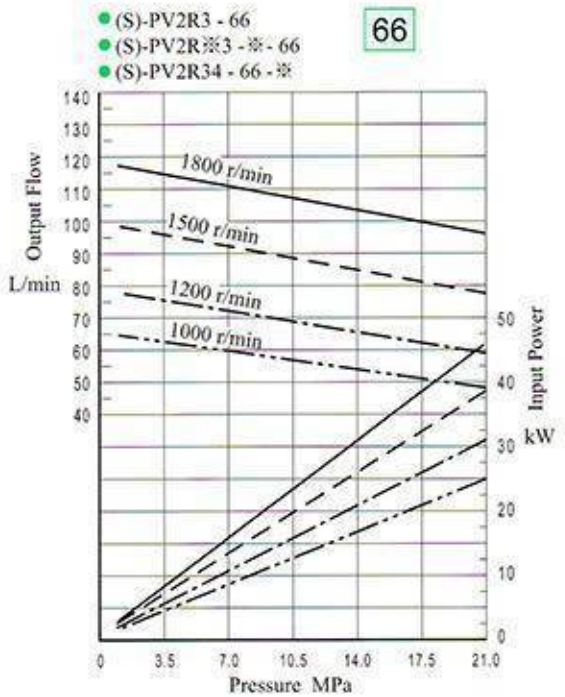

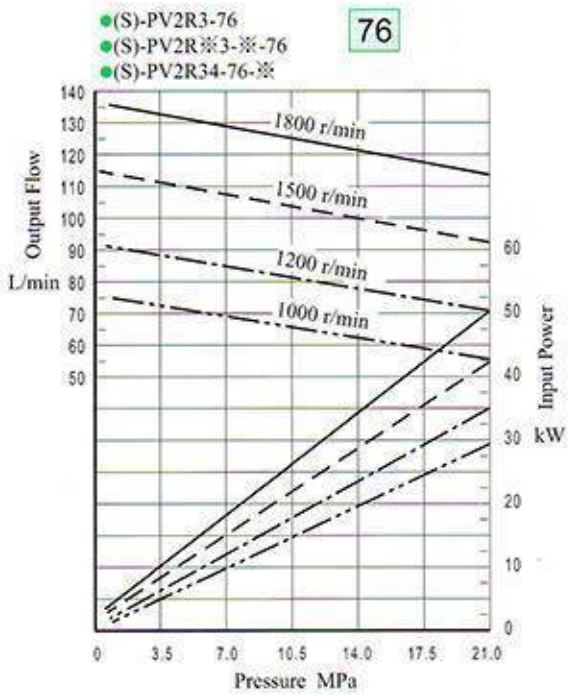

(S)-PV2R Series Single Vane Pumps Max. Pressure 21 MPa

Pressure—Output Flow · Input Power Characteristics
Fluid Viscosity 20 mm²/s (ISO VG32 Oils, 50°C)

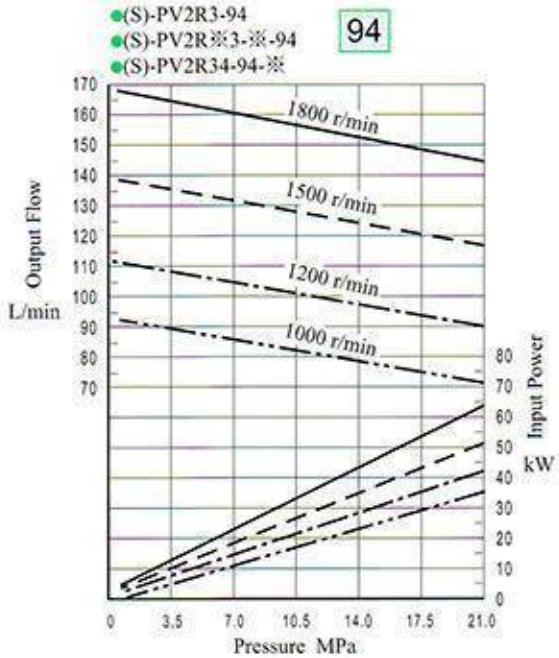

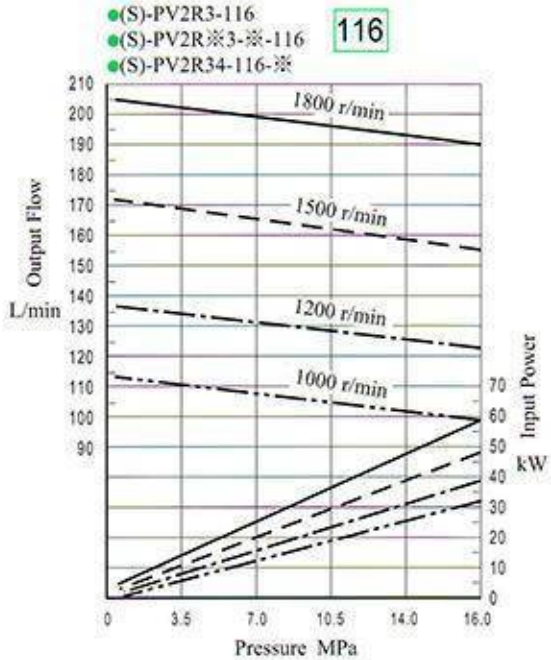

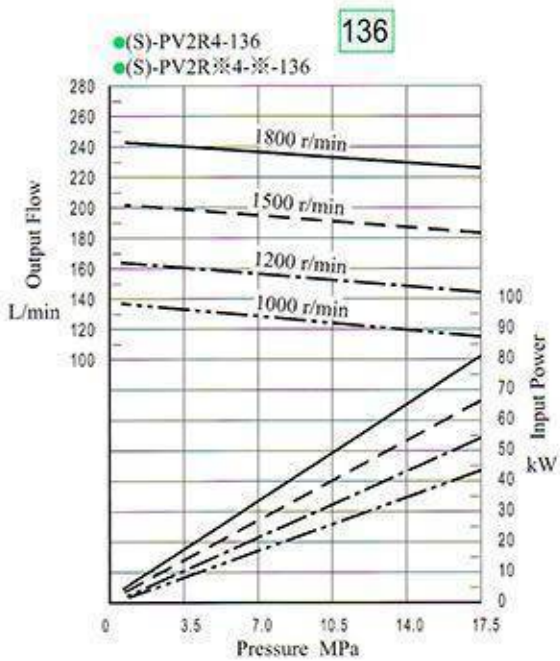

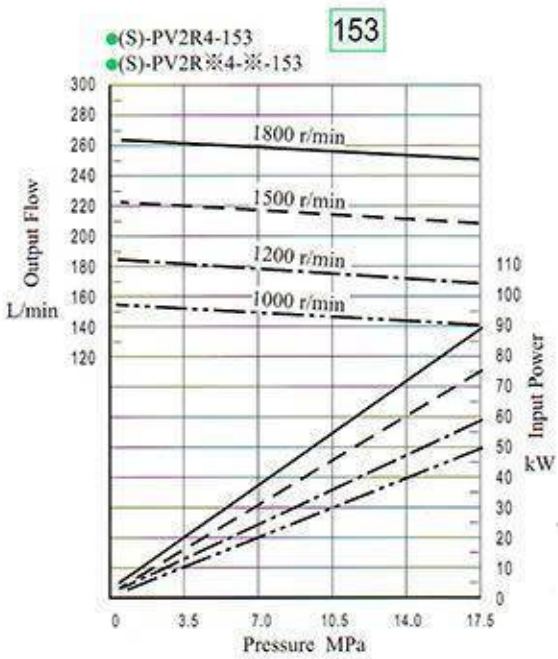

(S)-PV2R Series Single Vane Pumps Max. Pressure 21 MPa

Pressure—Output Flow › Input Power Characteristics
Fluid Viscosity 20 mm²/s (ISO VG32 Oils, 50°C)

184

●(S)-PV2R4-184
●(S)-PV2R※4-※-184

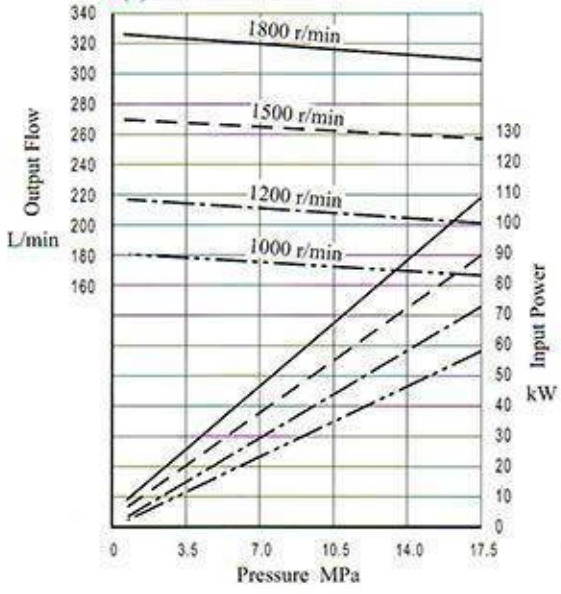

200

●(S)-PV2R4-200
●(S)-PV2R※4-※-200

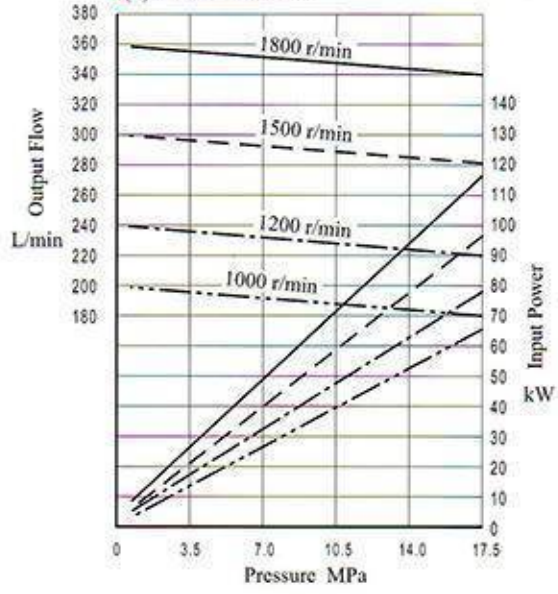

237

●(S)-PV2R4-237
●(S)-PV2R※4-※--237

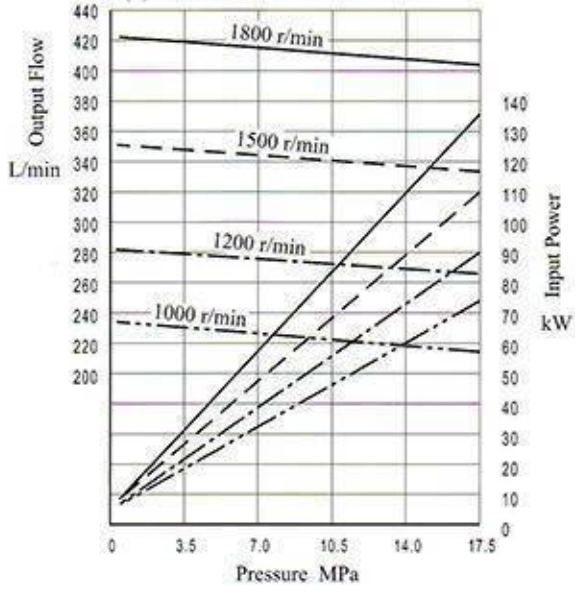

S-PV2R Series Single Vane Pumps Max. Pressure 21 MPa

- The pumps with high pressure and high quality, have been developed especially for low noise operation
- The pumps can be used on various applications including injection moulding machines and machine tools...etc, with output range: 26.6~237cm³/rev.
- The pump cartridge kit is assembled by screws, so it is easy to assemble and maintain.
- Because of small pressure pulsation, the noise level of the machines can be reduced considerably.

Graphic Symbol

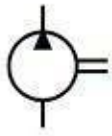

Specifications

Model No.	Geometric Displacement cm³/rev	Max. Pressure MPa (kgf/cm²)	Shaft Speed Range r/min	Mass kg Flange Mtg	Mass kg Foot Mtg.
S-PV2R2-26 -※-※※※-45	26.6	21 (210)	★1 600~1800	31.0	39.0
S-PV2R2-33 -※-※※※-45	33.3				
S-PV2R2-41 -※-※※※-45	41.3				
S-PV2R2-47 -※-※※※-45	47.2				
S-PV2R2-53 -※-※※※-45	52.5				
S-PV2R2-59 -※-※※※-45	58.2				
S-PV2R2-65 -※-※※※-45	64.7				
S-PV2R2-75 -※-※※※-45	75	16 (160)			
S-PV2R3-60 -※-※※※-35	59.6	21 (210)	600~1800	55.5	63.5
S-PV2R3-66 -※-※※※-35	66.3				
S-PV2R3-76 -※-※※※-35	76.4				
S-PV2R3-85 -※-※※※-35	85				
S-PV2R3-94 -※-※※※-35	93.6				
S-PV2R3-108 -※-※※※-35	108	17.5 (175)			
S-PV2R3-116 -※-※※※-35 ★2	115.6	16 (160)			
S-PV2R3-125 -※-※※※-35	125	14 (140)			
S-PV2R4-136 -※-※※※-35	136	17.5 (175)	600~1800	70	95
S-PV2R4-153 -※-※※※-35	153				
S-PV2R4-184 -※-※※※-35	184				
S-PV2R4-200 -※-※※※-35	201				
S-PV2R4-237 -※-※※※-35 ★2	237				

★1. For starting at low speed of shaft rotation, the maximum viscosity is limited. Please refer to page 8 for details (Table 2).

★2. When operating with a shaft speed exceeding 1700rpm, the minimum suction pressure is restricted. Please refer to page 8 (Table 1).

- For pressure - output flow & input power characteristics, please refer to page 28~34.
- Anti-wear type petroleum hydraulic fluids are recommended to use with these pumps. (please refer to page 7)
- Noise Level Comparison of S-PV2R2-65 and PV2R2-65, please refer to page 36 (Diagram 1).

Model Number Designation

S-PV2R2-41-F-R A A-※

- Series Number (Super low noise type)
- Nominal displacement cm³/rev
- Type of Mounting
  - L : Foot mounting
  - F : Flange Mounting
- Shaft Rotation(Viewed from shaft end)
  - R : Clockwise(Normal)
  - L : Anti-clockwise
- Discharge Port Position (view from shaft end)
  - A : Upwards(Normal) B : Downwards
  - R : Right L : Left
  - Flange mounting is available for A only
- Suction Port Position (Viewed from shaft end)
  - A : Upwards(Normal) B : Downwards
  - R : Right L : Left
- Design Number

S-PV2R Series Single Vane Pumps Max. Pressure 21 MPa

Noise level comparison of S-PV2R2-65 and PV2R2-65

Fluid Viscosity 32cSt

Measurement point: 1M horizontally away from pump head cover

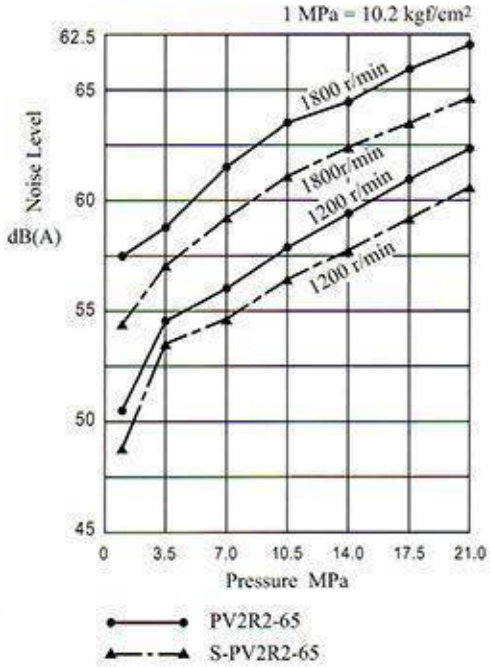

Pipe Flange

Pump Model Number	Name of Ports	Pipe Flange Kit Model No.
S-PV2R2	Suction	F5-12-A-10T
	Discharge	F5-08-A-10T
S-PV2R3	Suction	F5-16-A-10T
	Discharge	F5-10-A-10T
S-PV2R4	Suction	F5-24-B-10T
	Discharge	F5-12-B-10T

- In Pipe Flange Kit Model No. A:Threaded Connection / B: For Pipe Socket Welding.
- Details of the pipe flange kit are described please refer to page 50.
- When ordering, please specify pipe flange kit model.

S-PV2R2

Flange Mtg.

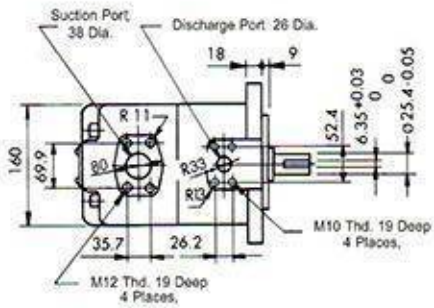

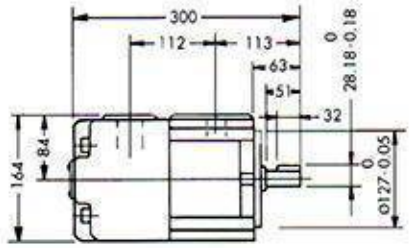

Foot Mtg.

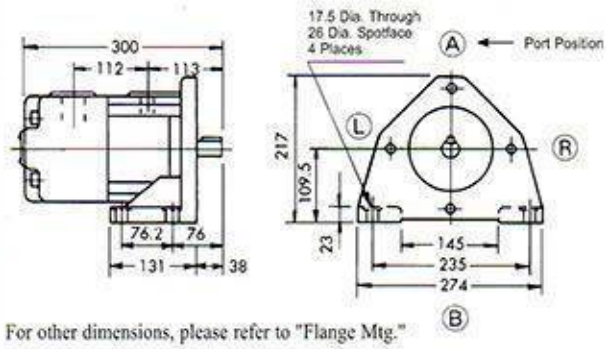

For other dimensions, please refer to "Flange Mtg."

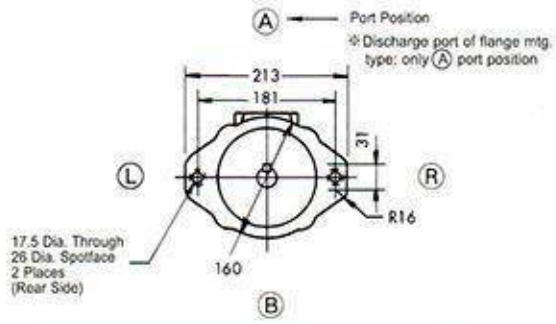

S-PV2R Series Single Vane Pumps Max. Pressure 21 MPa

S-PV2R3

Flange Mtg.

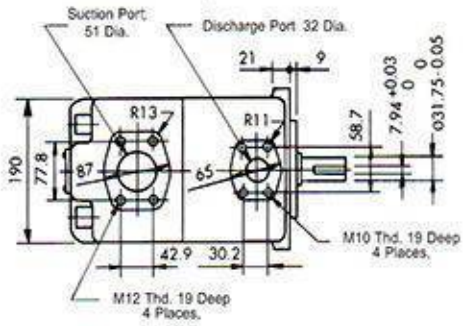

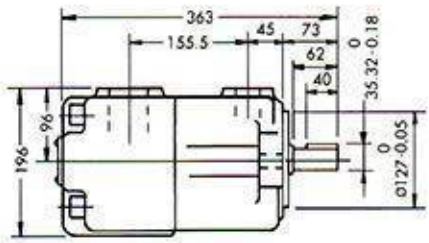

Foot Mtg.

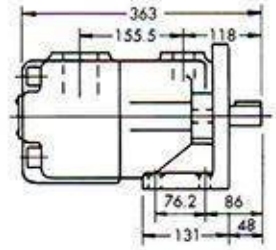

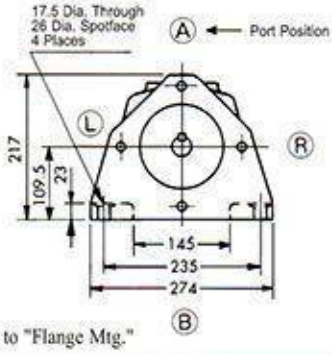

For other dimensions, please refer to "Flange Mtg."

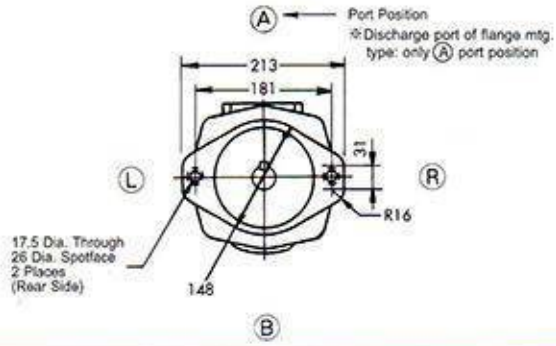

S-PV2R4

Flange Mtg.

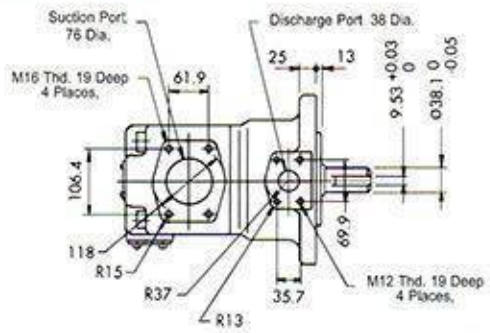

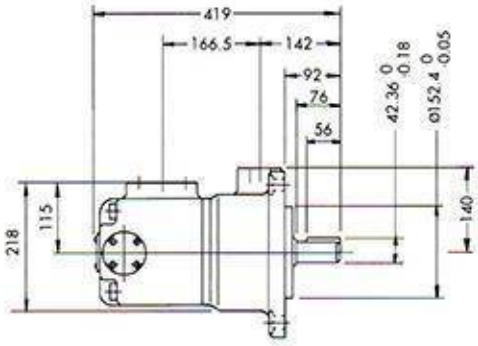

Foot Mtg.

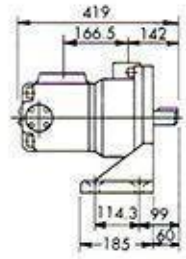

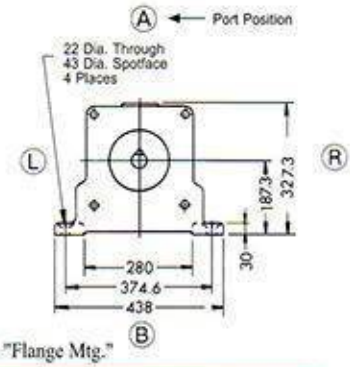

For other dimensions, please refer to "Flange Mtg."

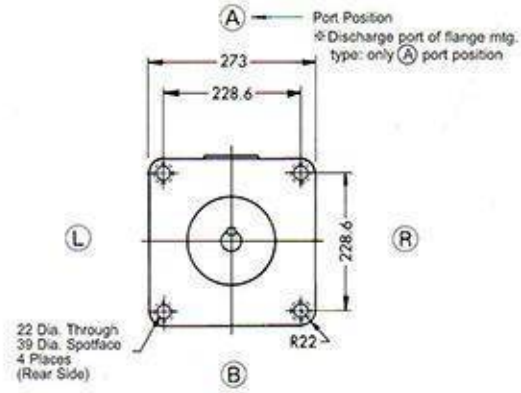

YUKEN
OIL HYDRAULIC EQUIPMENT

HYDRAULIC PUMPS

S-PV2R Series Double Vane Pumps Max. Pressure 21 MPa

- These double pumps consist of two PV2R series single pumps combined in tandem within a single housing and driven by a common shaft.
- Fluid delivered from the two separate ports can be either supplied to separate or common circuits.

Model Number Designation

S-PV2R12	—6	—65	—L	—R	E	A	A	—42
Series Number	Small Volume Pump Nominal Displacement cm³/rev	Large Volume Pump Nominal Displacement cm³/rev	Mounting	Direction of Rotation (viewed from shaft end)	Small Volume Pump Discharge port position (viewed from shaft end)	Large Volume Pump Discharge port position (viewed from shaft end)	Suction Port Position (viewed from shaft end)	Design Number
PV2R12	6 8 10 12 14 17 19 23 25 31	26 33 41 47 53 59 65 75	L: Foot Mounting F: Flange Mounting	R: Clockwise (Normal) L: Anti-clockwise	E: Left up (Normal) F: Right up G: Right down H: Left down	A: Upwards (Normal) B: Downwards R: Right L: Left	A: Upwards (Normal) B: Downwards R: Right L: Left	★4
S-PV2R12								45
PV2R13		60 66 76 85 94 108 116 125			A: Upwards (Normal) B: Downwards R: Right L: Left			★4
S-PV2R13								45
★1 PV2R14		136 153 184 200 237						★4
S-PV2R14								35
PV2R22		26 33 41 47 53 59 65 75 (Close to shaft end)						40
PV2R23	26 33 41 47 53 59 65 75	60 66 76 85 94 108 116 125			E: Left up (Normal) F: Right up G: Right down H: Left down			41
S-PV2R23								45
★1 PV2R24		136 153 184 200 237			A:Upwards(Normal) B:Downwards R:Right L:Left			31
S-PV2R24					E: Left up (Normal) F: Right up G: Right down H: Left down			35
★1 PV2R34	60 66 76 85 94 108 116 125							31
S-PV2R34								35
★1 PV2R33		60 66 76 85 94 108 116 125			A: Upwards (Normal) B: Right down R: Right L: Left			31
S-PV2R33								35

★1 : Delivery is longer, if you have any requirement, please contact our sales engineers.
2 : About the limit of the maximum operation pressure for each nominal displacement, please refer to the next page (P39)
3 : Pressure-Output Flow, Input Power Characteristics, please refer to page 28~34.
4 :

Series Number	Small Volume Pump Nominal Displacement cm³/rev	Large Volume Pump Nominal Displacement cm³/rev	Design Number
PV2R12	6, 8, 10, 12, 14	26, 33, 41, 47, 53, 59, 65	43
	17, 19, 23, 25, 31		4326
	6, 8, 10, 12, 14	75	4323
	17, 19, 23, 25, 31		43123
PV2R13	6, 8, 10, 12, 14	60, 66, 76, 94, 116	43
	17, 19, 23, 25, 31		4326
	6, 8, 10, 12, 14	85, 108, 125	4323
	17, 19, 23, 25, 31		43123
PV2R14	6, 8, 10, 12, 14	136, 153, 184, 200, 237	33
	17, 19, 23, 25, 31		3326

Graphic Symbol

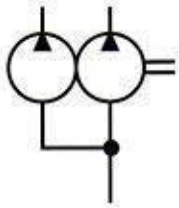

Pipe Flange Kits

Pump Model No.	Pipe Flange Kit Model No.		
	Suction	Large Pump Discharge	Small Pump Discharge
PV2R12	F5-16 -A- 10T	F5-06 -A- 10T	F5-04 -A- 10T
S-PV2R12	F5-20 -A- 10T	F5-08 -A- 10T	F5-06 -A- 10T
PV2R13	F5-24 -B- 10T	F5-10 -A- 10T	F5-04 -A- 10T
S-PV2R13	F5-24 -B- 10T	F5-10 -A- 10T	F5-06 -A- 10T
PV2R14	F5-28 -B- 10T	F5-12 -A- 10T	F5-04 -A- 10T
S-PV2R14	F5-28 -B- 10T	F5-12 -B- 10T	F5-06 -B- 10T
PV2R22	F5-20 -A- 10T	F5-06 -A- 10T	F5-06 -A- 10T
PV2R23	F5-24 -B- 10T	F5-10 -A- 10T	F5-06 -A- 10T
S-PV2R23	F5-24 -B- 10T	F5-10 -A- 10T	F5-08 -A- 10T
PV2R24	F5-28 -B- 10T	F5-12 -A- 10T	F5-06 -A- 10T
S-PV2R24	F5-28 -B- 10T	F5-12 -B- 10T	F5-08 -B- 10T
PV2R33	F5-28 -B- 10T	F5-10 -A- 10T	F5-10 -A- 10T
S-PV2R33	F5-28 -B- 10T	F5-10 -A- 10T	F5-10 -A- 10T
PV2R34	F5-32 -B- 10T	F5-12 -B- 10T	F5-10 -B- 10T
S-PV2R34	F5-32 -B- 10T	F5-12 -B- 10T	F5-10 -B- 10T

- In Pipe Flange Kit Model No. A: Threaded Connection / B: For Pipe Socket Welding.
- Details of the pipe flange kit are described please refer to page 50.
- When ordering, please specify pipe flange kit model.

(S)-PV2R Series Double Vane Pumps Max. Pressure 21 MPa

Specifications

●Maximum Operation Pressure

Nominal Displacement	Geometric Displacement cm^3/rev	Maximum Operation Pressure MPa (kgf/cm^2)
6	5.8	★1 21 (210)
8	8.0	
10	9.4	21 (210)
12	12.2	
14	13.7	
17	16.6	
19	18.6	
23	22.7	
25	25.3	
31	31.0	★2 16 (160)
26	26.6	21 (210)
33	33.3	
41	41.3	
47	47.2	
53	52.5	
59	58.2	
65	64.7	
75	75	★2 16 (160)
60	59.6	21 (210)
66	66.3	
76	76.4	
85	85	
94	93.6	
108	108	★2 17.5 (175)
116	115.6	★2 16 (160)
125	125	★2 14 (140)
136	136	★2 17.5 (175)
153	153	
184	184	
200	201	
237	237	

★1.When small volume pump pressure above 16 MPa(160kgf/cm^2), shaft rotation speed must raise more than 1450rpm.

★2.When you choose Nominal Displacement, the Maximum operation pressure is limited at 14/16/17.5 MPa.

Limit of the Input Power

(S)-PV2R12 series, the sum of the input power to small volume pump and large volume pump is limited against the speed of shaft rotation as follows:

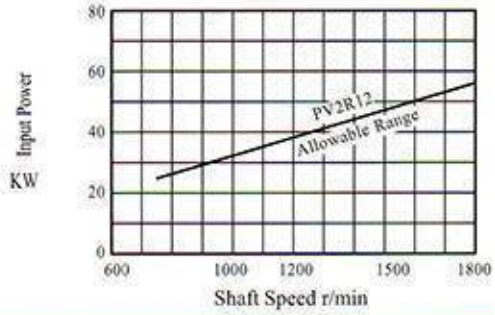

Shaft Speed Range

Model Numbers	Shaft Speed Range r/min	
	★3 Maximum	★4 Minimum
(S)-PV2R12	1800	750
(S)-PV2R13	1800	750
(S)-PV2R14	1800	750
(S)-PV2R23	1800	600
(S)-PV2R24	1800	600
(S)-PV2R34	1800	600

★3.The minimum suction pressure is limited in accordance with the speed. Please refer to page 8 (Table 1) for details.

★4.The Limit of Maximum Viscosity when starting at low speed of shaft rotation. Please refer to page 8 (Table 2) for details.

Mass

Pump Model No.	Mass kg	
	Flange Mtg.	Foot Mtg.
PV2R12	25	29.3
S-PV2R12	41	51
PV2R13	45.6	55.6
S-PV2R13	64	74
PV2R14	75	100
S-PV2R14	94	119
PV2R22	57	61
PV2R23	51	61
S-PV2R23	74	84
PV2R24	78	103
S-PV2R24	112	137
PV2R33	84	94
S-PV2R33	92	102
PV2R34	98	123
S-PV2R34	126	151

YUKEN OIL HYDRAULIC EQUIPMENT

HYDRAULIC PUMPS

(S)-PV2R Series Double Vane Pumps Max. Pressure 21 MPa

PV2R12

Flange Mtg.

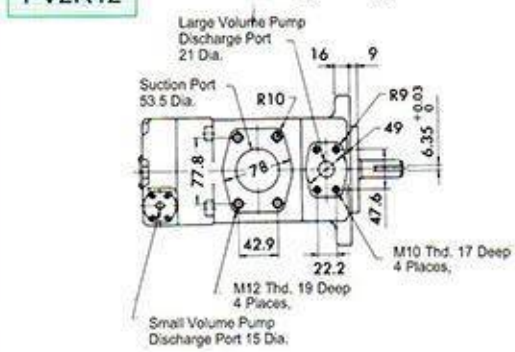

Foot Mtg.

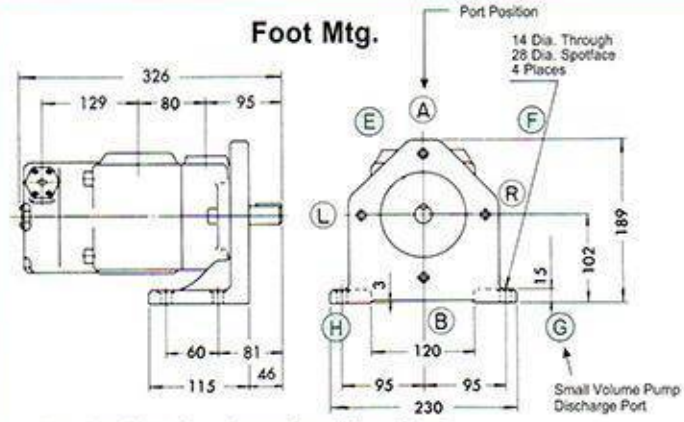

For other dimensions, please refer to "Flange Mtg."

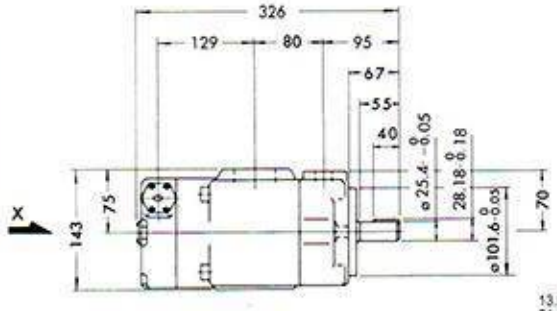

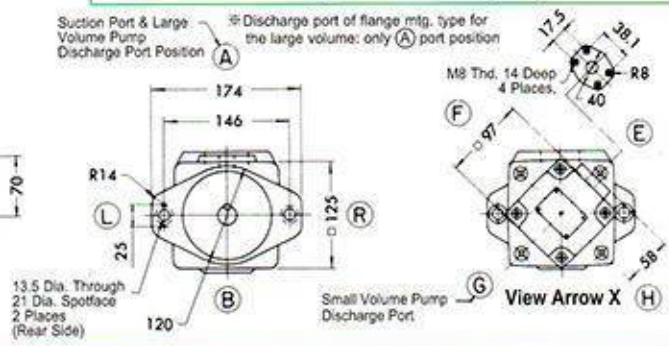

S-PV2R12

Flange Mtg.

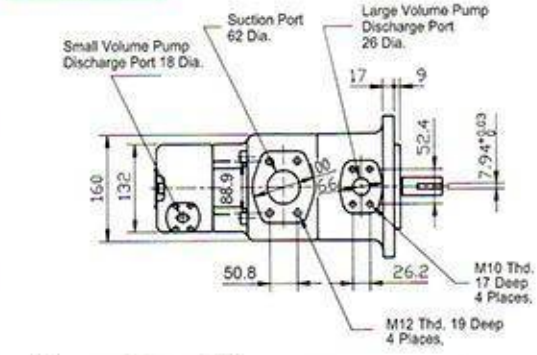

Foot Mtg.

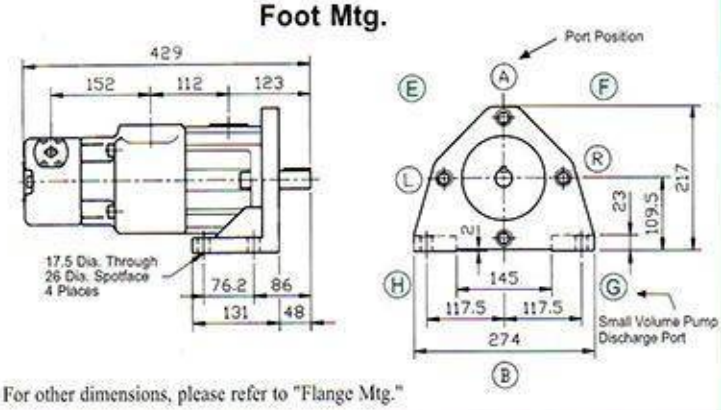

For other dimensions, please refer to "Flange Mtg."

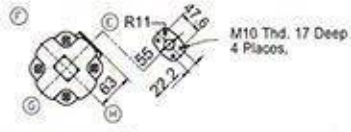

View Arrow X

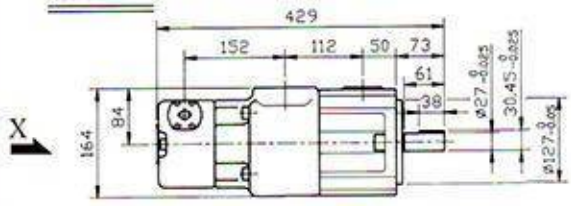

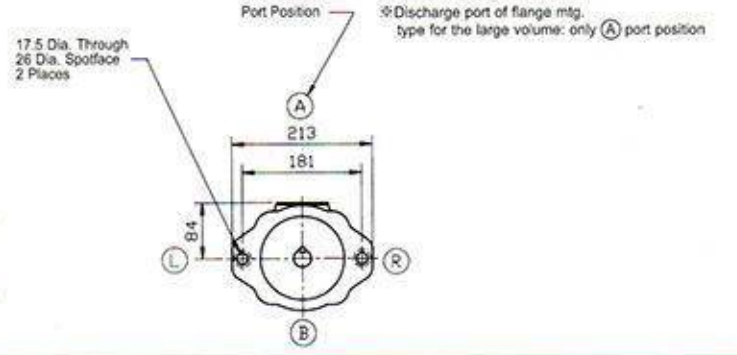

(S)-PV2R Series Double Vane Pumps Max. Pressure 21 MPa

PV2R13

Flange Mtg.

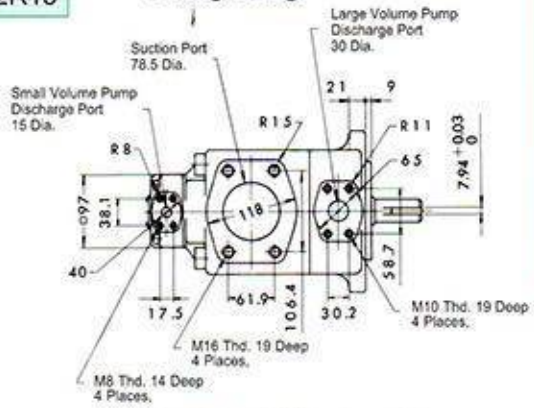

Foot Mtg.

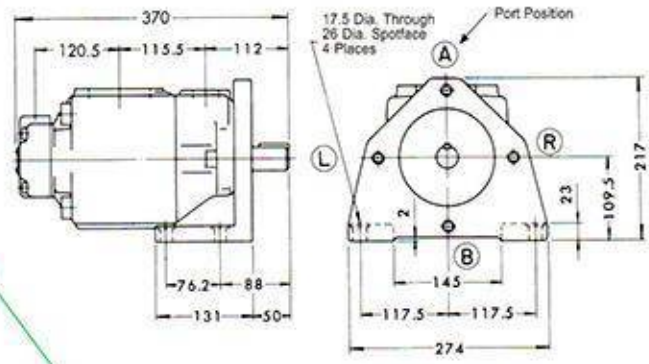

For other dimensions, please refer to "Flange Mtg."

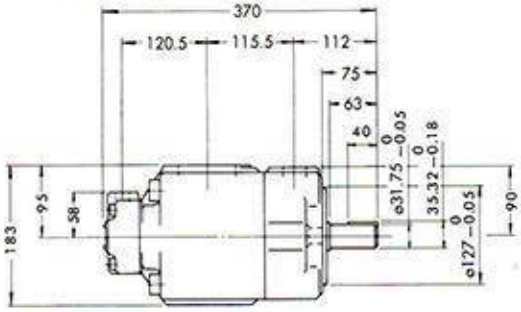

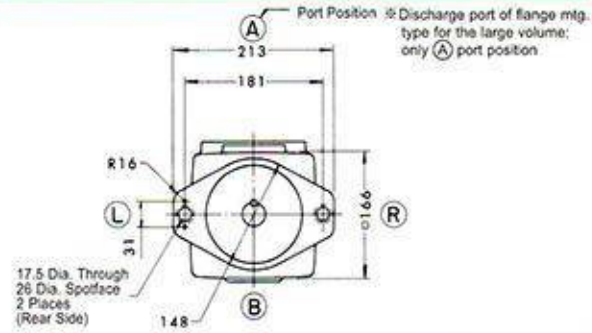

S-PV2R13

Flange Mtg.

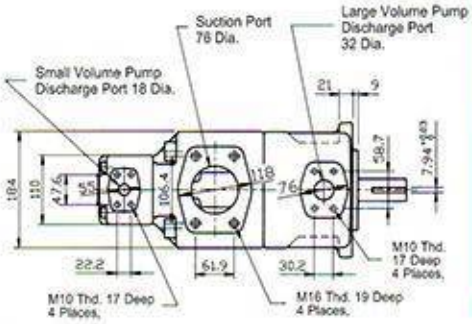

Foot Mtg.

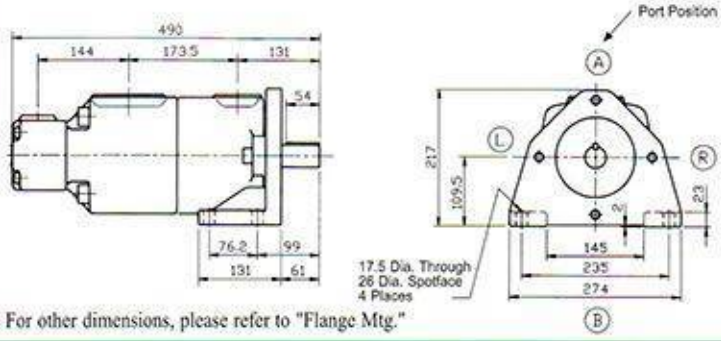

For other dimensions, please refer to "Flange Mtg."

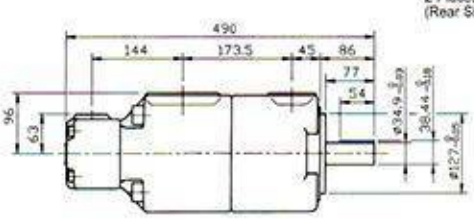

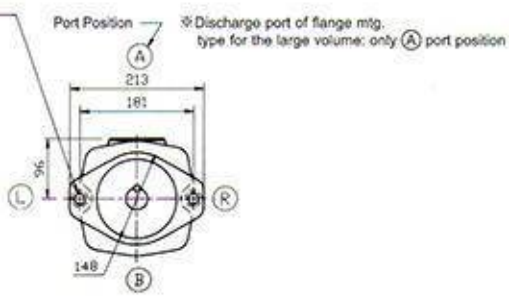

YUKEN OIL HYDRAULIC EQUIPMENT

HYDRAULIC PUMPS

(S)-PV2R Series Double Vane Pumps Max. Pressure 21 MPa

PV2R14

Flange Mtg.

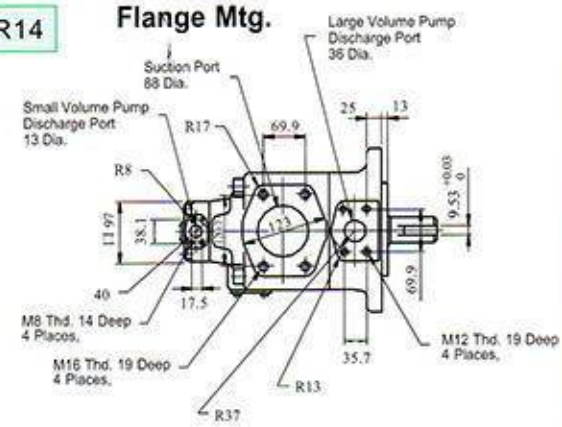

Foot Mtg.

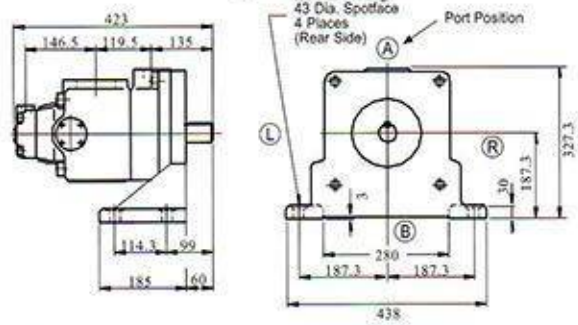

For other dimensions, please refer to "Flange Mtg."

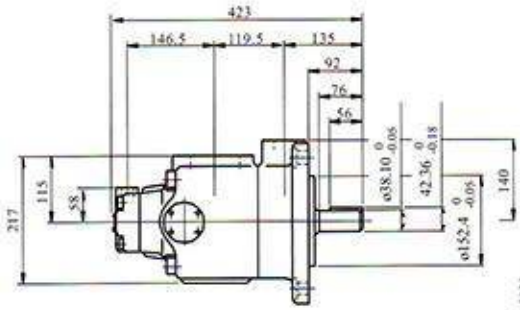

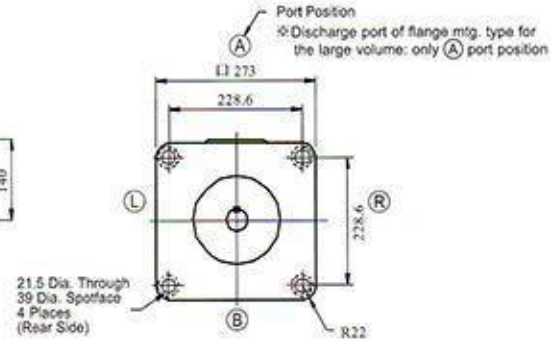

S-PV2R14

Flange Mtg.

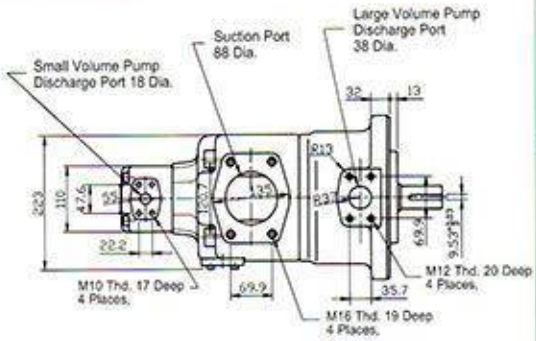

Foot Mtg.

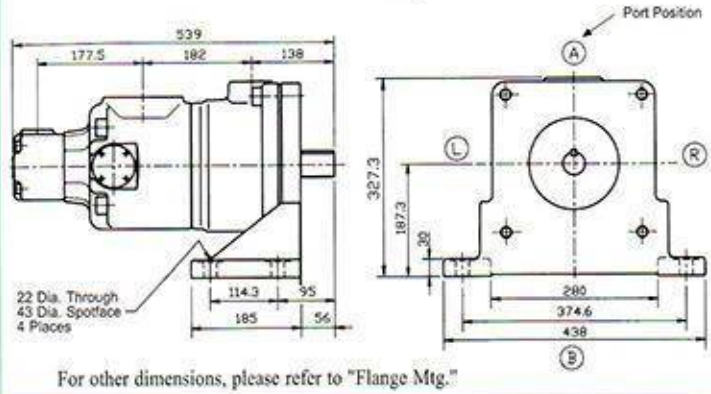

For other dimensions, please refer to "Flange Mtg."

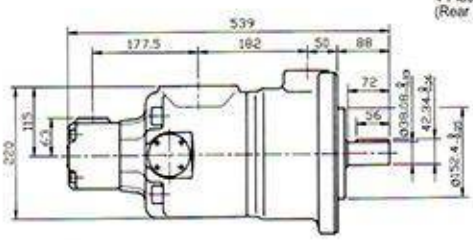

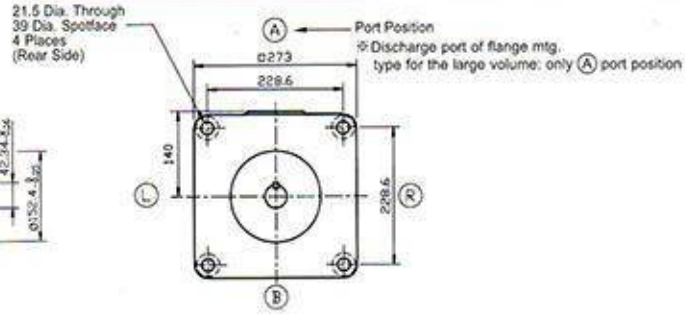

(S)-PV2R Series Double Vane Pumps Max. Pressure 21 MPa

PV2R23

Flange Mtg.

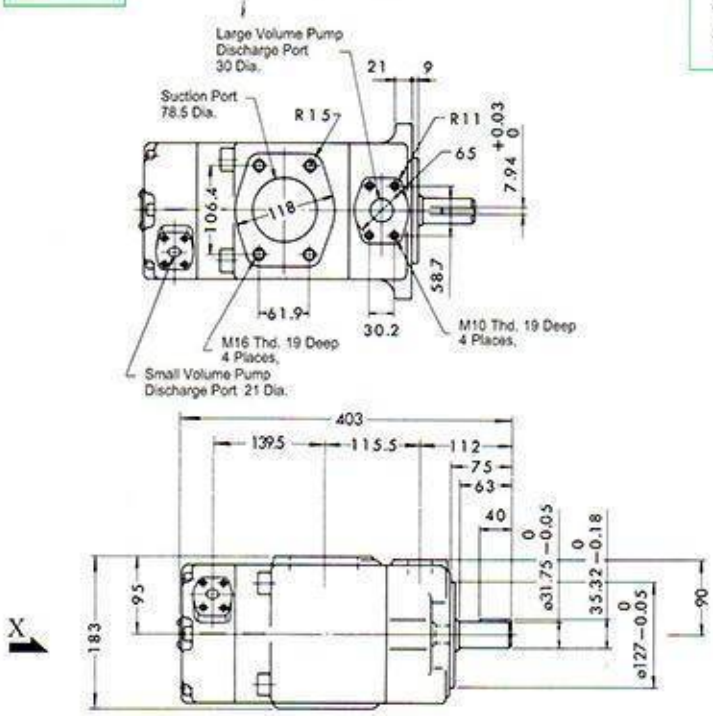

Foot Mtg.

The foot bracket is the same as S-PV2R23 series, therefore, for dimensions of foot bracket, please refer to S-PV2R23 series.

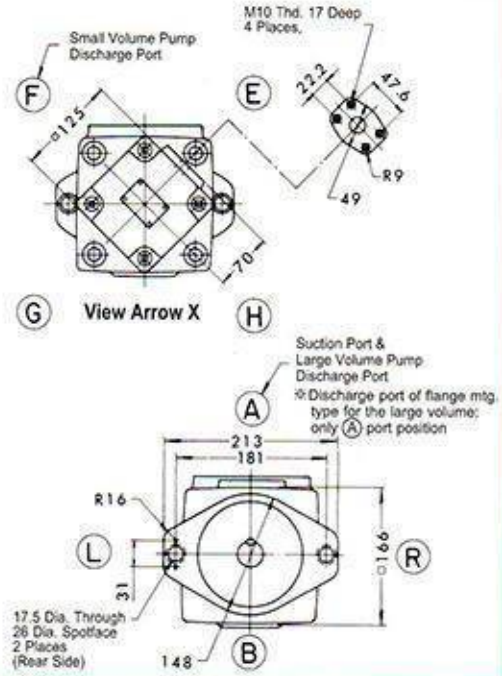

S-PV2R23

Flange Mtg.

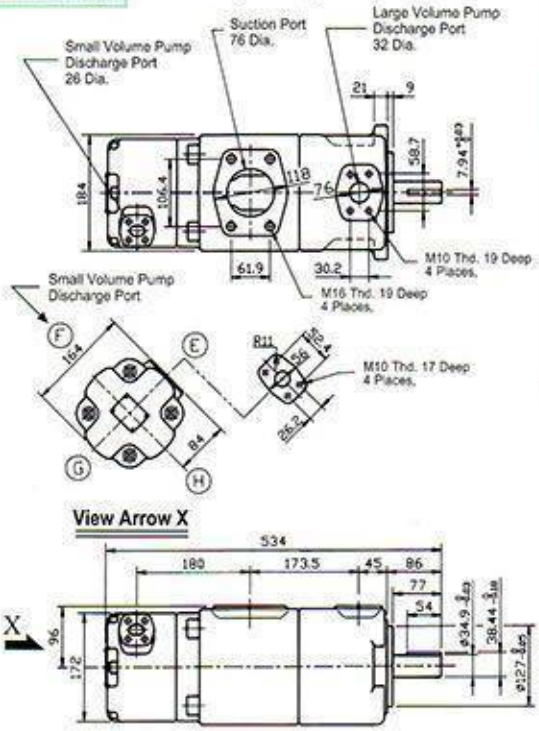

Foot Mtg.

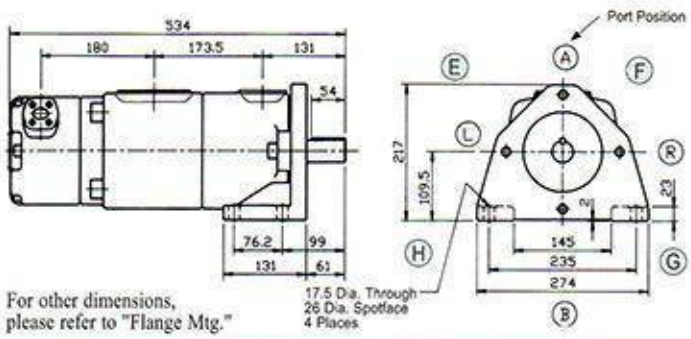

For other dimensions, please refer to "Flange Mtg."

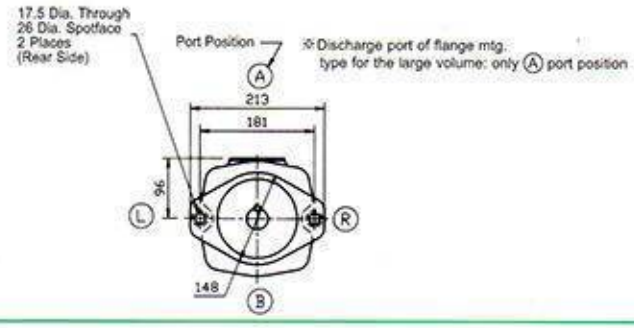

YUKEN OIL HYDRAULIC EQUIPMENT

HYDRAULIC PUMPS

(S)-PV2R Series Double Vane Pumps Max. Pressure 21 MPa

PV2R24

Flange Mtg.

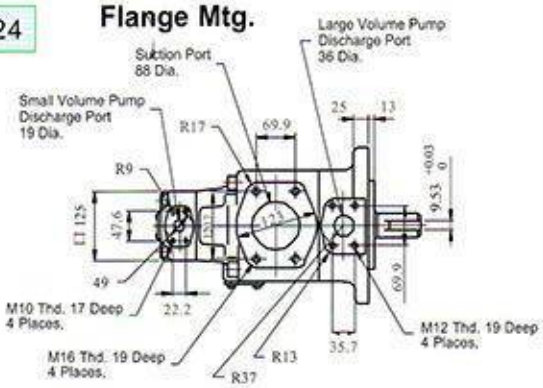

Foot Mtg.

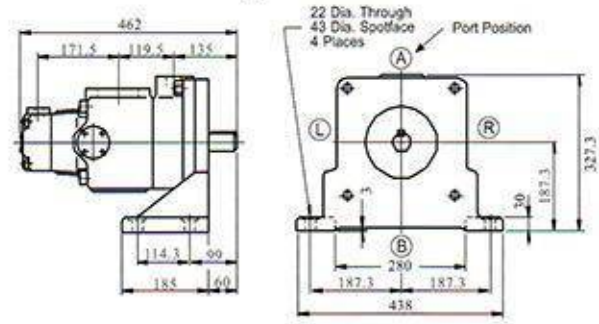

For other dimensions, please refer to "Flange Mtg."

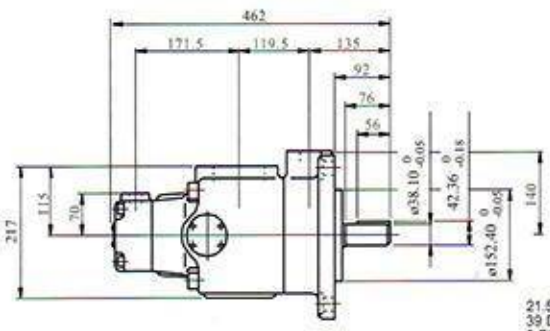

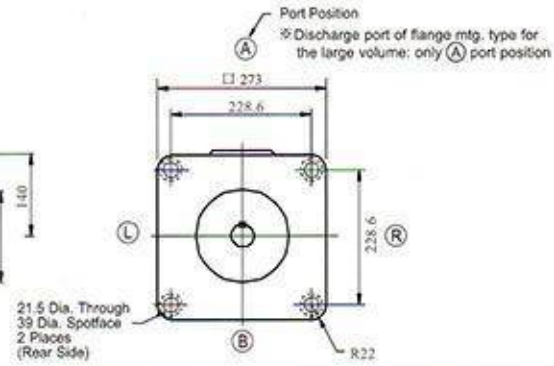

S-PV2R24

Flange Mtg.

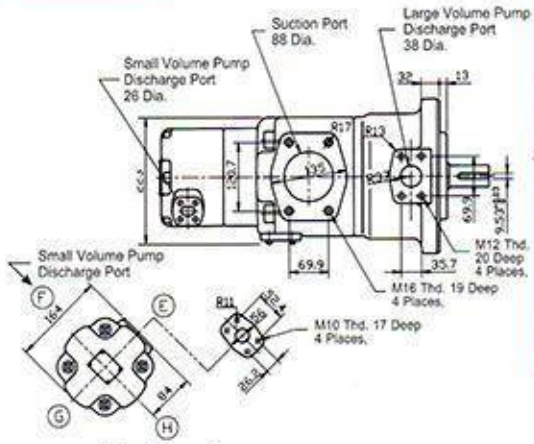

Foot Mtg.

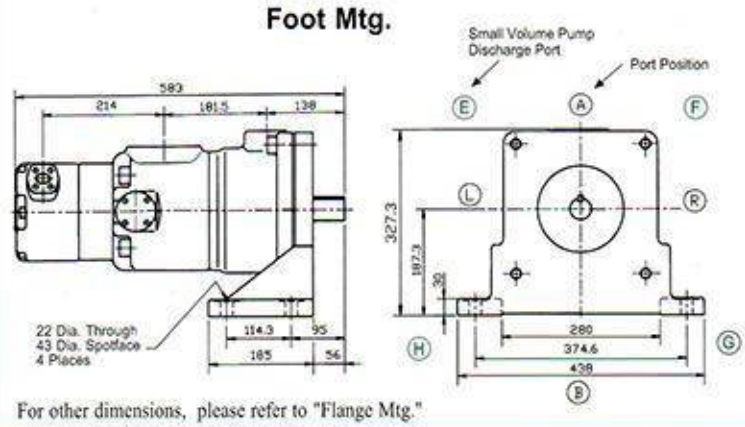

For other dimensions, please refer to "Flange Mtg."

View Arrow X

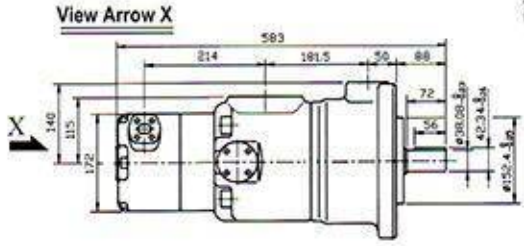

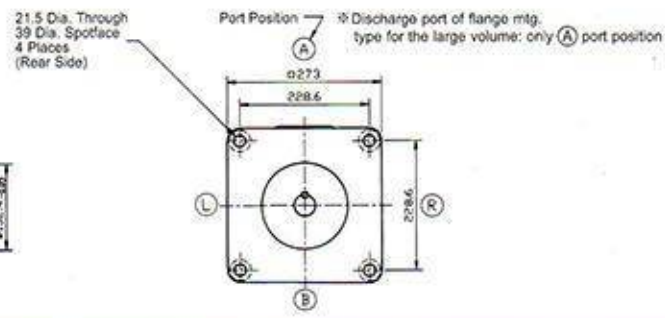

(S)-PV2R Series Double Vane Pumps Max. Pressure 21 MPa

PV2R33

Flange Mtg.

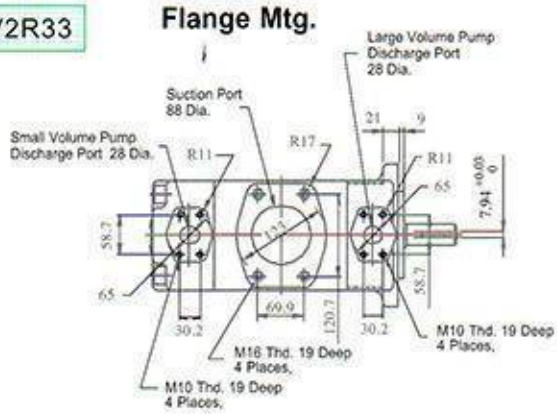

Foot Mtg.

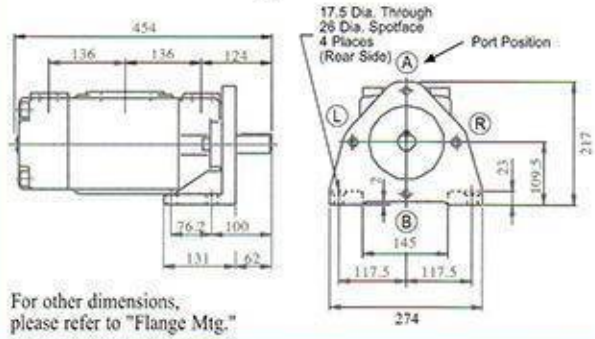

For other dimensions, please refer to "Flange Mtg."

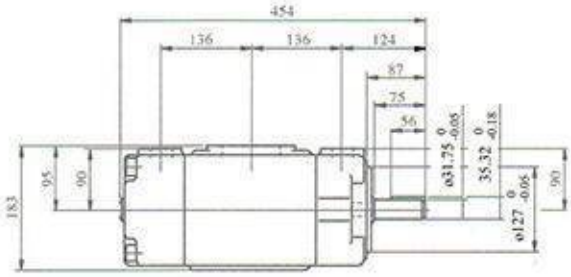

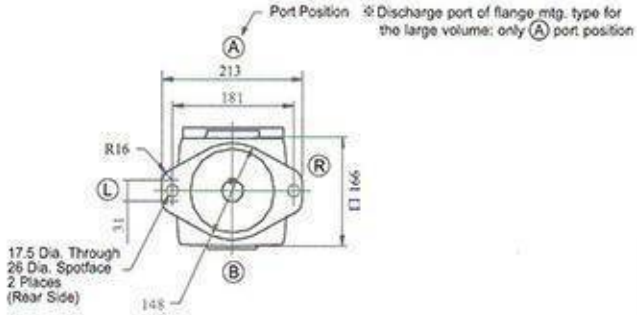

S-PV2R33

Flange Mtg.

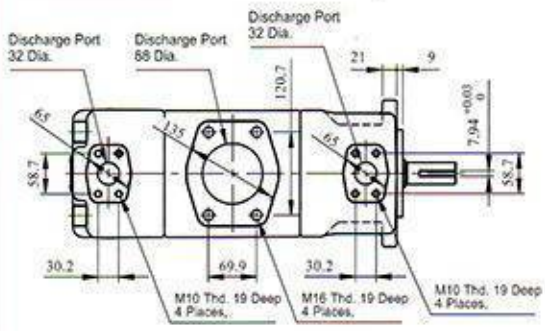

Foot Mtg.

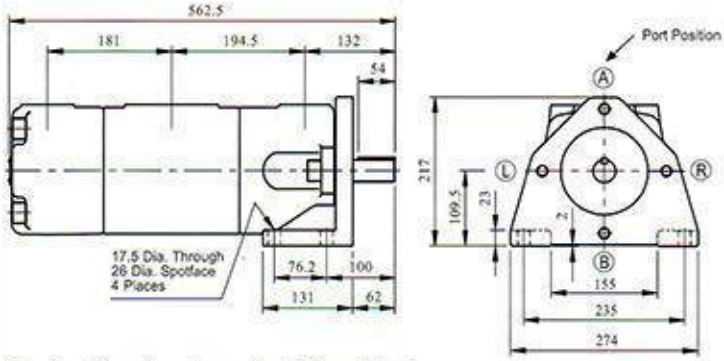

For other dimensions, please refer to "Flange Mtg."

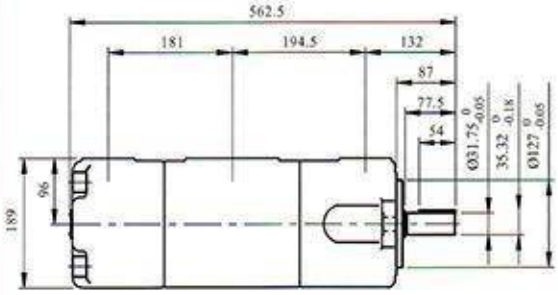

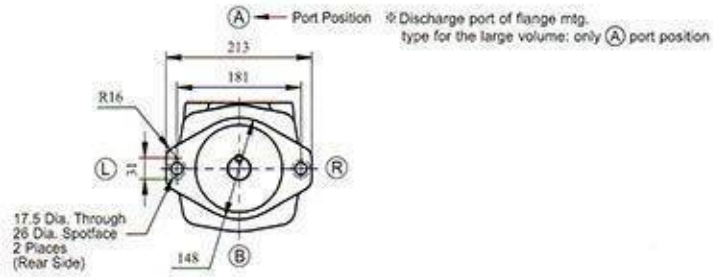

YUKEN
OIL HYDRAULIC EQUIPMENT

HYDRAULIC PUMPS

(S)-PV2R Series Double Vane Pumps Max. Pressure 21 MPa

PV2R34

Flange Mtg.

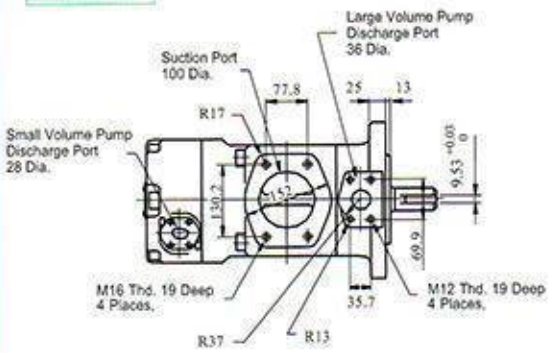

Foot Mtg.

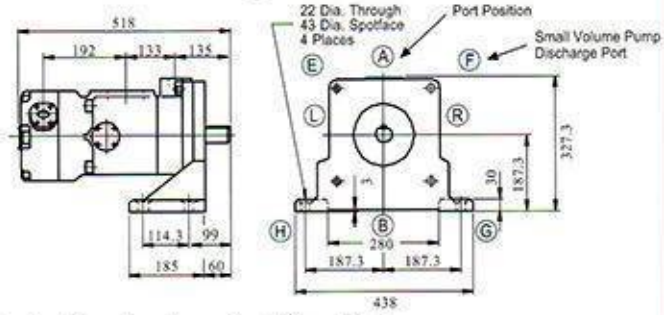

For other dimensions, please refer to "Flange Mtg."

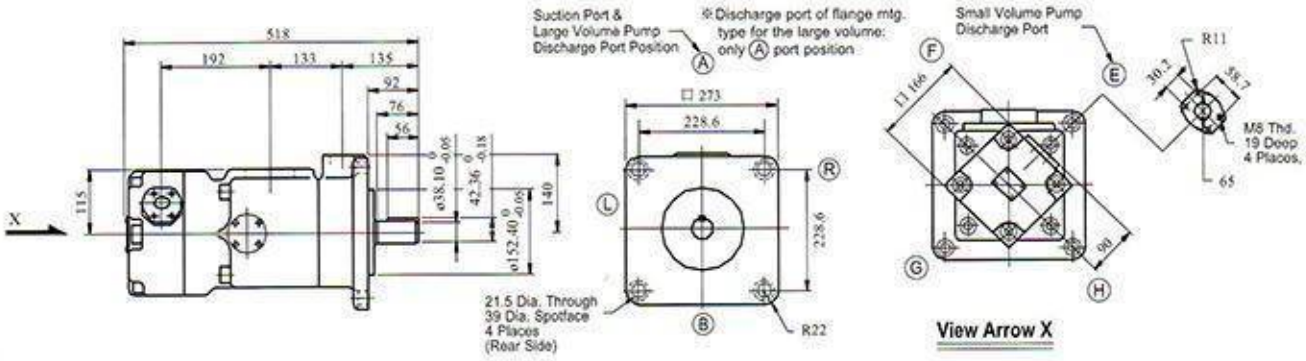

S-PV2R34

Flange Mtg.

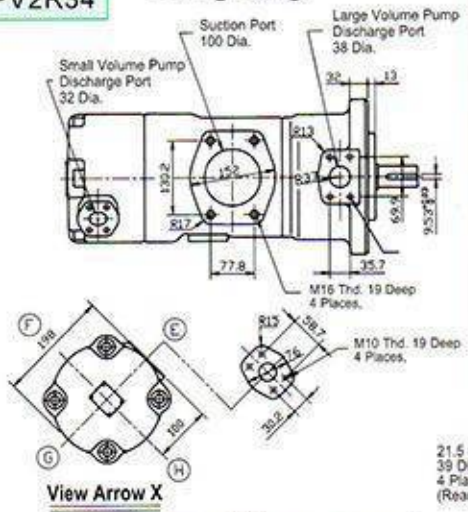

Foot Mtg.

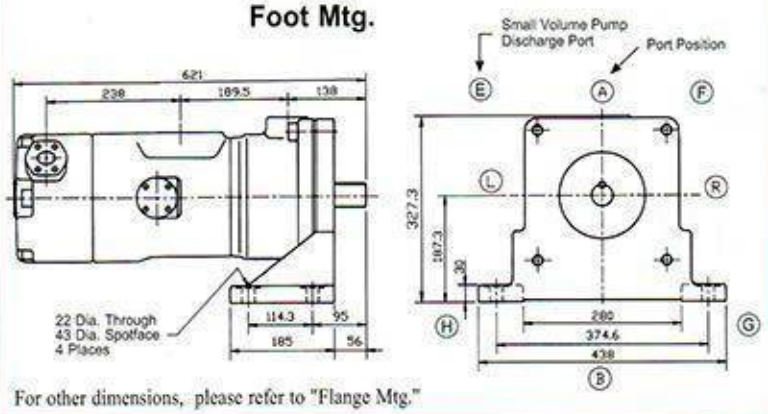

For other dimensions, please refer to "Flange Mtg."

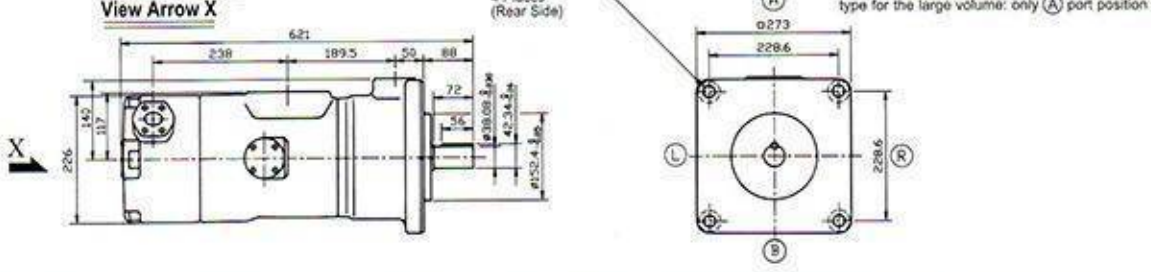

(S)-PV2R Series Double Vane Pumps Max. Pressure 21 MPa

PV2R22

Flange Mtg.

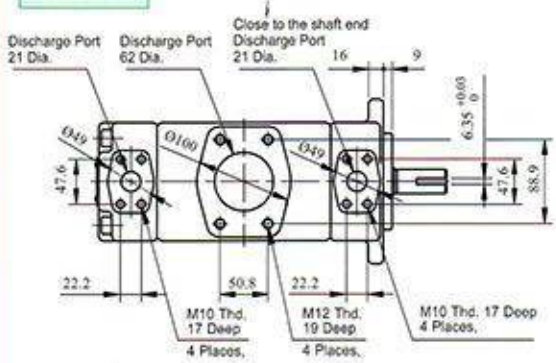

Foot Mtg.

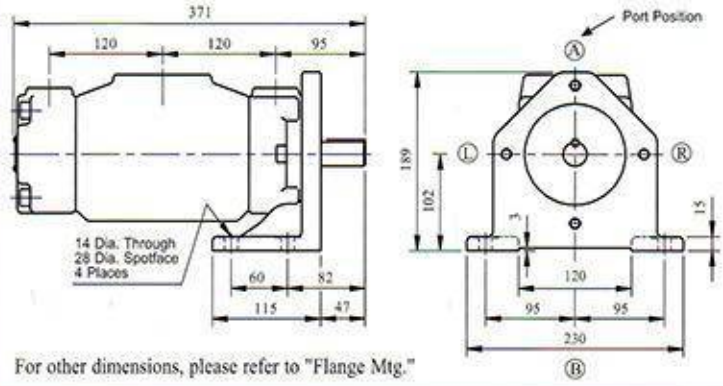

For other dimensions, please refer to "Flange Mtg."

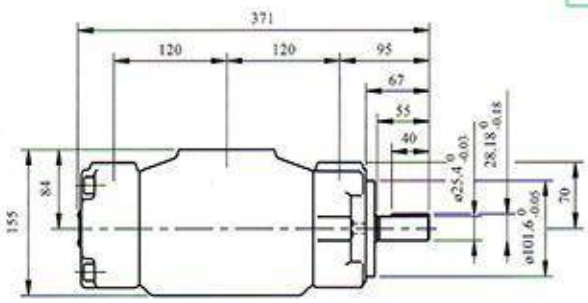

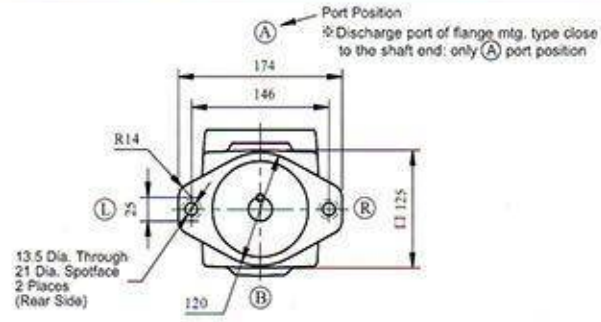

YUKEN
OIL HYDRAULIC EQUIPMENT

HYDRAULIC PUMPS

A^{16}_{22}SR Series Piston & Vane Pumps — Max. Pressure 21 MPa

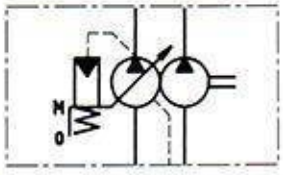

01 : Pressure Compensator Control Valve

★1. Pressure Compensator Control Type:
When the system pressure increases and comes close to the preset cut-off pressure, the pump flow decreases automatically while maintaining the set pressure as it is. According to your requirements, flow and cut-off pressure can be adjusted manually.

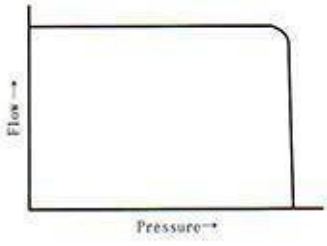

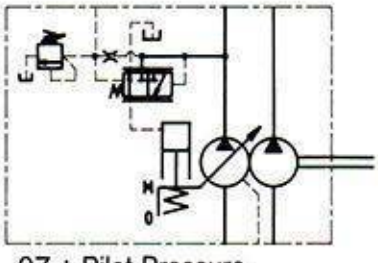

07 : Pilot Pressure Control type Valve

★2. Pilot Pressure Control Type:
The pump is used in combination with the pilot relief valve or multistage pressure control valve. By controlling the pilot remote-controlled according to your requirements.

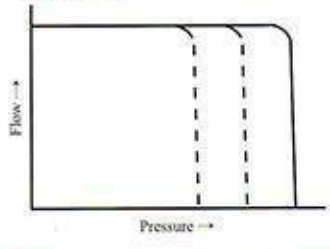

- This double pump combines characteristics of piston pump's high cut-off pressure and vane pump's large volume low noise; with high and low pressure circuit design, the motor power can be used most effectively.
- Piston pumps also have options of AR16/AR22 piston pumps (the maximum operating pressure 16 MPa). Please refer to page 16-19.

Specifications

Model No.	Geometric Displace. cm³/rev		Max. Pressure MPa (kgf/cm²)		Minimum Adj. Flow L/min	Shaft Speed Range r/min	Mass kg	
	Piston Pump	Vane Pump	Piston Pump	Vane Pump	Piston Pump		Flange Mtg.	Foot Mtg.
*1 A16SR3-※-※-35	15.8	60 66 76 85 94 108 *2 116 125	21.4	21.0 (17.5/16/14)	4	*2 600~1800	72	80
*1 A22SR3-※-※-35	22.2		16.3		6		72	80
A16SR4-※-※-35	15.8	136 153 184 200 *2 237	21.4	17.5	4		86.5	111.5
A22SR4-※-※-35	22.2		16.3		6		86.5	111.5

※1.When starting at low speed of shaft rotation the maximum viscosity is limited. Please refer to page 8 (Table 2).
※2.When operating with a shaft speed exceeding 1700rpm, the minimum suction pressure is restricted. Please refer to page 8 (Table 1)

- For pressure - output flow & input power characteristics, please refer to page 32~34.
- Anti-wear type petroleum hydraulic fluids are recommended to use with these pumps.(please refer to page 7)
- Care in application of Piston Pump

1.Must be careful about the contamination control of the hydraulic fluid. Please keep the contamination rate under NAS10. Suction port must be installed with at least 100 μm filter, return circuit must be installed with spin-on return filter less than 25 μm.
2.Install the pump so that the "Filling Port" is at the top.
3.Suction port pressure is between -125mmHg ~ +0.05MPa(0.5kgf/cm²), piping diameter of suction ports is the same as the piping diameter of flanges.
4.To prevent extra noise when piping for suction port or discharge port, please use soft rubber pipes.
5.Make sure to keep the pressure inside the pump under 0.1MPa(1kgf/cm²), compact pressure under 0.5MPa (5kgf/cm²), please use piping connection size of 3/8(caliber is bigger than ø8.5),piping caliber is bigger than ø10,piping length should be less than 1m, pipe's end should be immersed in the fluid.
6.Before you operate at the first time, please put 600cc clean operating oil into the pump through the suction port.
7.When the pump is ready to dispatch, please set the pump at maximum flow and minimum pressure.
8.Whenever setting the pressure, make sure the full cut-off pressure never exceeds the permissible maximum intermittent pressure.

Model Number Designation

A16 SR3-F R 01 C S -76-A-A-※

- Piston Pump: A16,A22
- Vane Pump: SR3:S-PV2R3; SR4:S-PV2R4
- Mounting: L : Foot Mtg.; F : Flange Mtg.
- Direction of Rotation(View from Shaft End): R : Clockwise(Normal)
- Piston Pump Control Type: ★1 01 : Pressure Compensator Control Type; ★2 07 : Pilot Pressure Control Type
- Piston Pump Press. Adj. Range: B :1.2~7 MPa (12.2~71.4kgf/cm²); C :1.2~16 MPa (12.2~163kgf/cm²); H :1.2~21 MPa (12.2~214kgf/cm²) (Applicable only for A16)
- Piston Pump Port Position: S : Side Port
- Vane Pump Nominal Displacement (cm³/rev): A※SR3:.60.66.76.94.108.116.125; A※SR4:136.153.184.200.237
- Vane Pump Discharge Port Position(view from shaft end): A : upwards(normal) B : downwards; R : right L : left
- Vane Pump Suction Port Position(view from shaft end): A : upwards(normal) B : downwards; R : right L : left
- Design Number

Pipe Flange Kits

Pump Model No.	Piston Pump Pipe Flange Kit Model No.			
	Piston Pump		Vane Pump	
	Suction	Discharge	Suction	Discharge
A16SR3 A22SR3	F5-06-A-10T	F5-06-A-10T	F5-16-A-10T	F5-10-A-10T
A16SR4 A22SR4	F5-06-A-10T	F5-06-A-10T	F5-24-B-10T	F5-12-B-10T

- In Pipe Flange Kit Model No. A: Threaded Connection / B: For Pipe Socket Welding.
- Details of the pipe flange kit please refer to page 50.
- When ordering, please specify pipe flange kit model.

A^{16}_{22}SR Series Piston & Vane Pumps — Max. Pressure 21 MPa

A^{16}_{22} SR3

Flange Mtg.(Side Port)

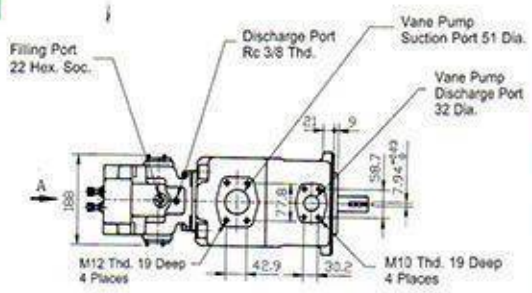

Foot Mtg.(Side Port)

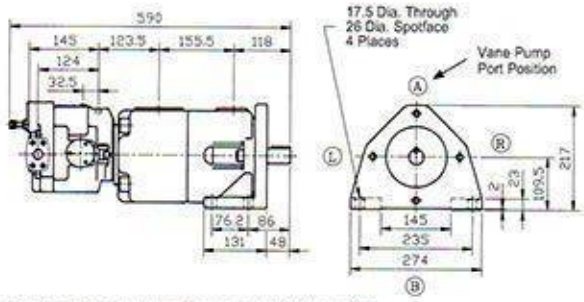

For other dimensions, please refer to Flange Mtg.

Flange Mtg.(Side Port)

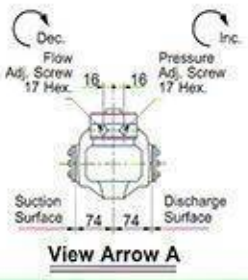

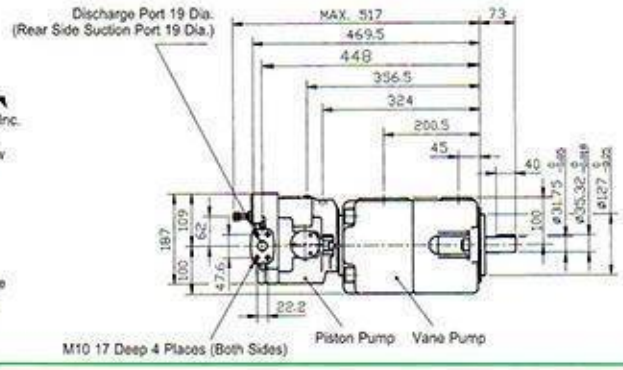

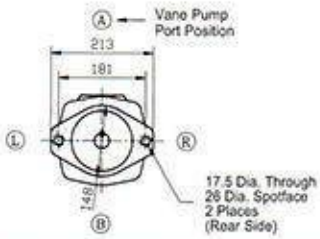

A^{16}_{22} SR4

Flange Mtg.(Side Port)

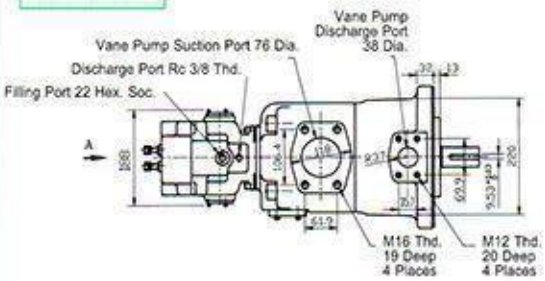

Foot Mtg.(Side Port)

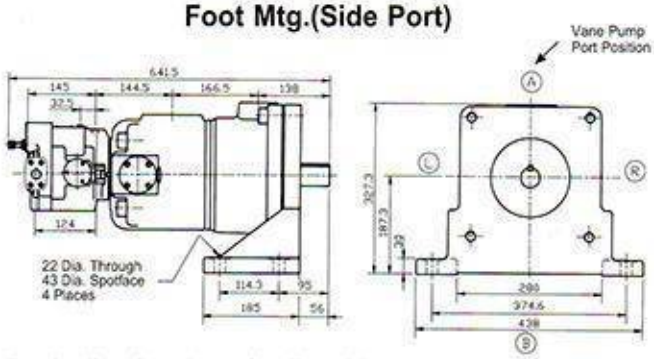

For other dimensions, please refer to Flange Mtg.

Flange Mtg.(Side Port)

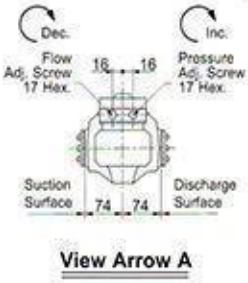

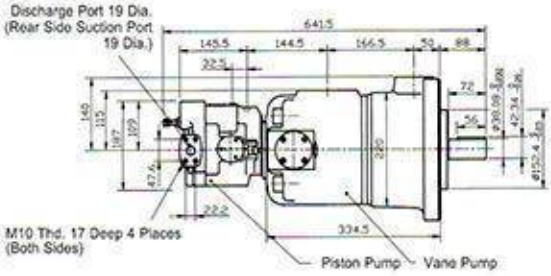

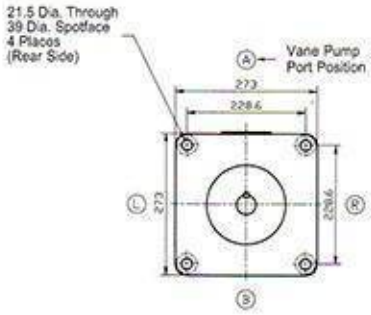

YUKEN
OIL HYDRAULIC EQUIPMENT

HYDRAULIC PUMPS

F5 Series Pipe Flange Kits

Max. Pressure 21 MPa

Flange Mtg. Dimensions: SAE 4 Bolt Solid Flanges

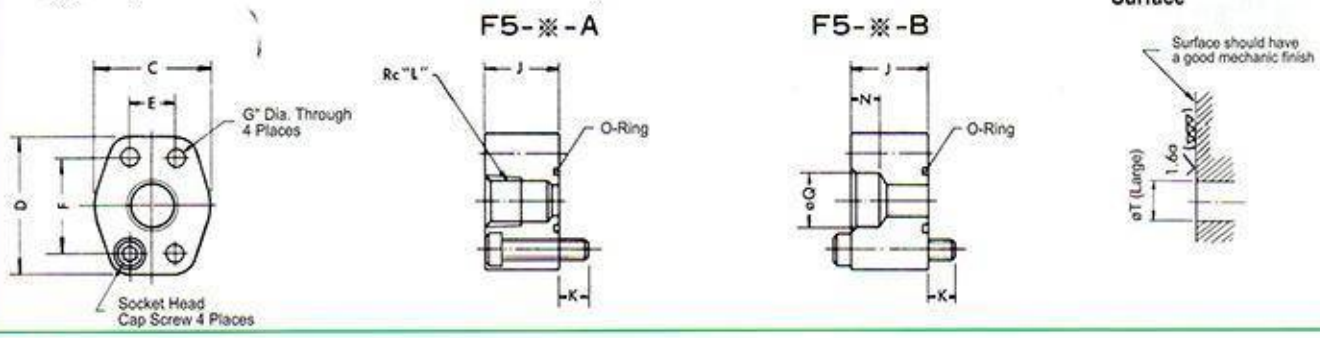

Specifications

1 MPa = 10.2 kgf/cm²

Model No.	Piping Size	Dimension mm C	D	E	F	G	J	K	L	N	Q	T	O-Ring	Socket Head Cap Screw	Max. Pressure MPa	Mass kg
F5-04W-A	3/8	40	56	17.5	38.1	8.8	26	12	3/8	-	-	16	P22	M 8 x 30	21	0.5
F5-04W-B								9	-	9	17.8			M 8 x 35		
F5-04 -A	1/2							12	1/2	-	-			M8 x 30		
F5-04 -B								9	-	11	22.2			M8 x 35		
F5-06X-A	3/4	54	71	22.2	47.6	8.8	28.5	12	3/4	-	-	20	G30	M 8 x 30	21	0.7
F5-06X-B									-	12	27.7			M 8 x 40		
F5-06 -A						11		17	3/4	-	-			M10 x 35		
F5-06 -B									-	12	27.7			M10 x 45		
F5-08W-A	3/4	56	76	26.2	52.4	11	28.5	17	3/4	-	-	26	G35	M10 x 35	21	0.9
F5-08W-B									-	12	27.7			M10 x 45		
F5-08 -A	1								1	-	-			M10 x 35		
F5-08 -B									-	14	34.5			M10 x 45		
F5-10 -A	1-1/4	72	84	30.2	58.7	11	28.5	17	1-1/4	-	-	32	G40	M10 x 35	21	1.2
F5-10 -B									-	16	43.2			M10 x 45		
F5-12 -A	1-1/2	74	96	35.7	69.9	13.5	30	17	1-1/2	-	-	38	G50	M12 x 35	21	1.5
F5-12 -B								15	-	18	49.1			M12 x 45		
F5-16W-A	1-1/2	96	107	42.9	77.8	13.5	29.5	15.5	1-1/2	-	-	48	G65	M12 x 30	21	1.8
F5-16W-B									-	18	49.1			M12 x 45		
F5-16 -A	2								2	-	-	51		M12 x 30	17.5	1.7
F5-16 -B									-	20	61.1			M12 x 45		
F5-20W-B	2	100	117	50.8	88.9	13.5	38	17	-	20	61.1	51	G70	M12 x 55	17.5	2
F5-20 -B	2-1/2								-	20	77.1	62		M12 x 55		
F5-24 -B	3	116	135	61.9	106.4	17.5	38	17	-	20	90.0	76	G85	M16 x 55	3.5	2.7
F5-28 -B	3-1/2	134	153	69.9	120.7	17.5	38	17	-	28	102.8	88	G100	M16 x 55	3.5	3.4
F5-32 -B	4	150	162	77.8	130.2	17.5	43	17	-	28	115.5	101	G115	M16 x 60	3.5	3.7

Model Number Designation

F - F5 - 06 X - A - 10T

- Type of Hydraulic Fluids
  - No : Standard
  - F : For Phosphate Ester Fluids Use Only
- Series Number
- Flange Size
- Special Spec.
  - No : Standard
  - X : Special Bolts
  - W : Piping Size Smaller than standard
  - V : Piping Size Smaller than W
- Type of Connection
  - A : Threaded Connection
  - B : For Pipe Socket Welding
- Design No.

Note:
1. Flange kits include bolts and o-ring as the attachment.
2. Material of O-Ring is described below.
   F5-※-※-10T NBR(Buna N) HS 90
   F-F5-※-※-10T FPM(Viton) HS 90
3. The strength of bolt is 12.9T

Tightening Torque for Bolts

Bolt Size	Tightening Torque N • m Recommendation	Tolerance
M8	34.3	±10%
M10	67.2	
M12	115.7	
M16	281.5	

Tightening Torque above is applicable to pressure line only.

SVPF Series Variable Vane Pump

Max. Pressure 7 MPa

This pump is quiet, small, high efficiency, longevity, and quick response, the pressure and flow of this pump are adjustable and it is suitable for small and light equipment such as machine tools and shoes machine.

Model Number Designation

SVPF	-12	-70	-B	-20
Series number	Geometric Displacement. L/min (1800 rpm)	Max. Operating Pressure MPa (kgf/cm²)	Shaft size (mm)	Design number
SVPF	12	20 : 2.0 (20 kgf/cm²)	B : shaft size ø15.875 (suggestion) None : shaft size ø12.7	20
	20	35 : 3.5 (35 kgf/cm²)		
	30	55 : 5.5 (55 kgf/cm²)	None :ø19.05 mm	
	40	70 : 7.0 (70 kgf/cm²)		

Graphic Symbol

Piping for Drain

The piping of the drain port should not be set over 0.05 MPa of the body. The length of Piping should not be over 1 m and please do not mix the return piping with other solenoid valves. The end of the piping should be put into the fluid. Recommend the size of the drain piping is as follows:
The fitting of the piping: 1/4 (internal diameter Ø6.6 plus)
The internal diameter of the piping:Ø7 plus

Setting of the pressure and displacement

The flow of the this pump is set at the Max. and the pressure of this pump is set at the lowest while the pump dispatched. Please reset the pressure and flow according to real working condition after receiving the pump.

Please refer to page 52 for other characteristics.

SVPF-12/20

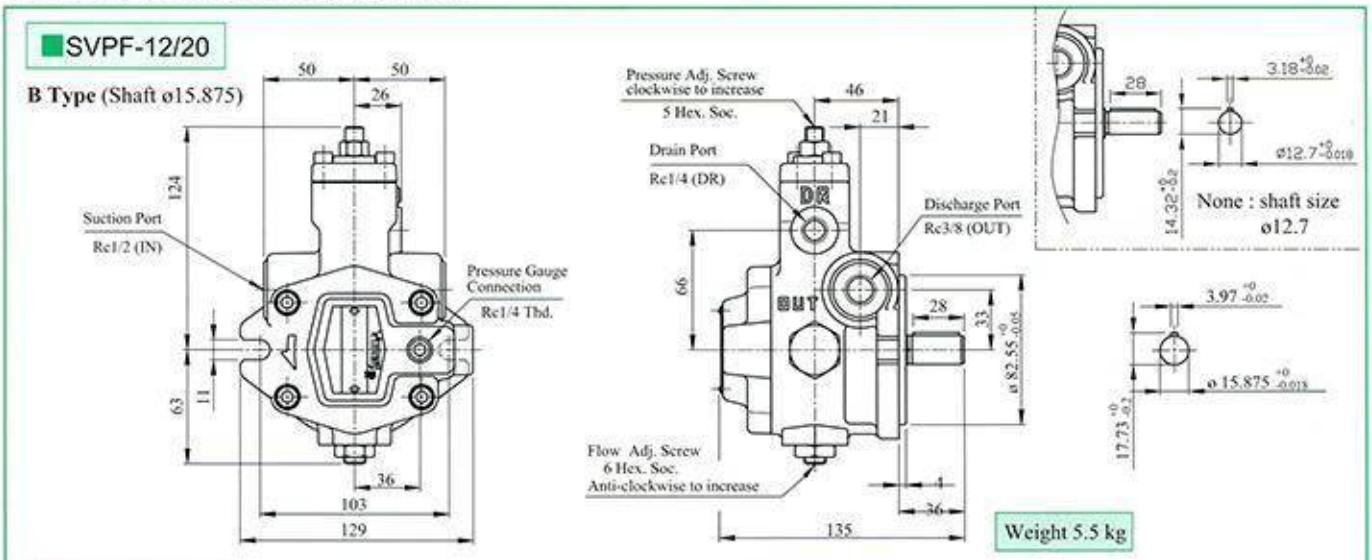

SVPF-30/40

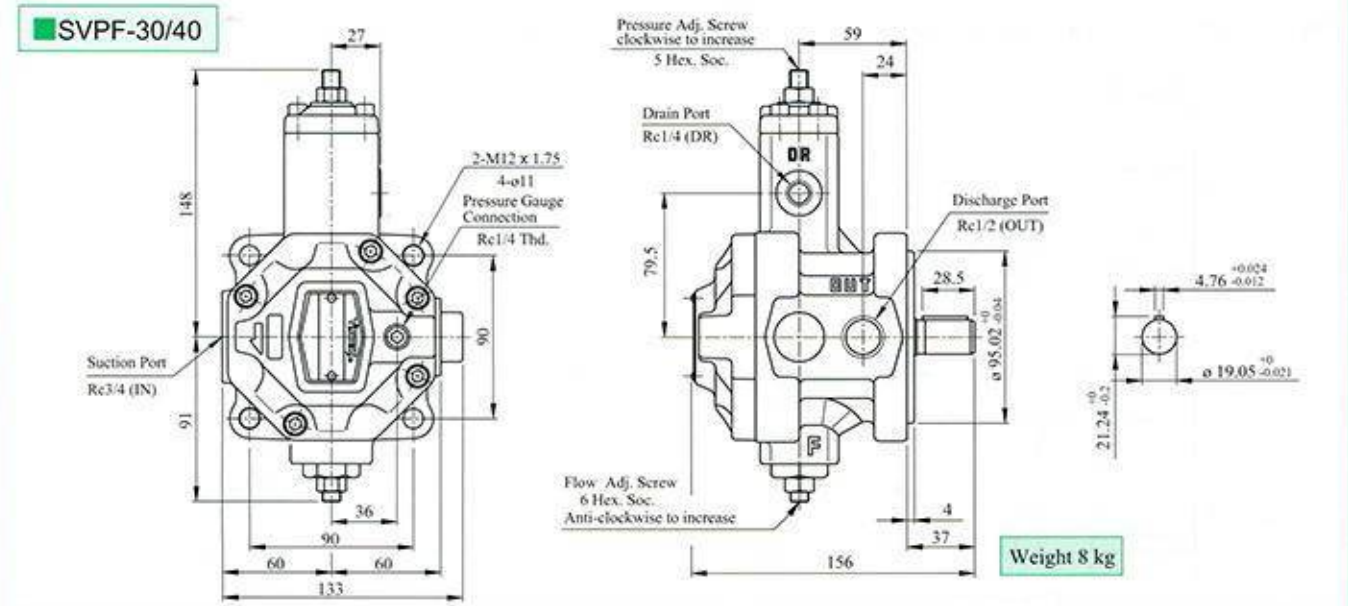

YUKEN
OIL HYDRAULIC EQUIPMENT

HYDRAULIC PUMPS

SVPDF Series Double Variable Vane Pump — Max. Pressure 7 MPa

This pump is quiet, small, high efficiency, longevity, and quick response. The double variable vane pump can save the installing space, the suction port and discharge port is separate.

Model Number Designation

SVPDF	-30	70	-30	70	-20
Series Number	Front Pump Geometric Displacement L/min (1800 rpm)	Front Pump Max. Operating Pressure MPa (kgf/cm²)	Rear Pump Geometric Displacement L/min (1800 rpm)	Reart Pump Max. Operating Pressure MPa (kgf/cm²)	Design Number
SVPDF	30	20 : 2.0 (20 kgf/cm²) 35 : 3.5 (35 kgf/cm²)	30	20 : 20 (20 kgf/cm²) 35 : 35 (35 kgf/cm²)	20
	40	55 : 5.5 (55 kgf/cm²) 70 : 7.0 (70 kgf/cm²)	40	55 : 55 (55 kgf/cm²) 70 : 70 (70 kgf/cm²)	

Graphic Symbol

Please refer to page 51 for the piping of the drain port, the setting of the pressure and displacement

SVPDF-※※-※※

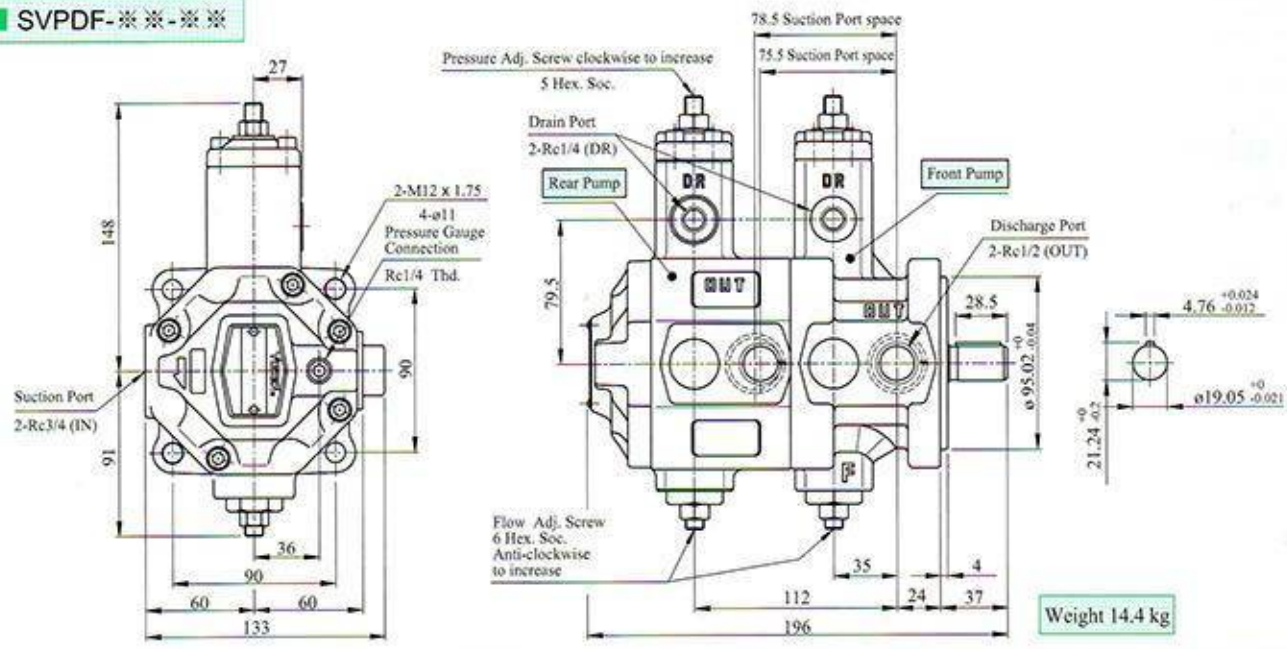

Characteristics : The following characteristics are based on fluid viscosity 46 mm²/s (ISO VG-46 40°C)

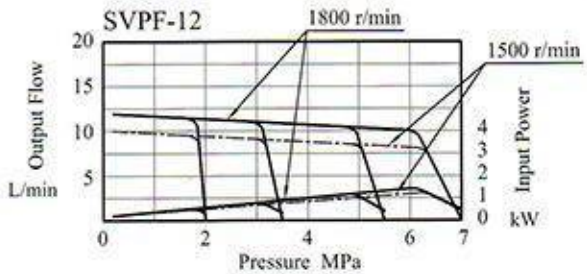

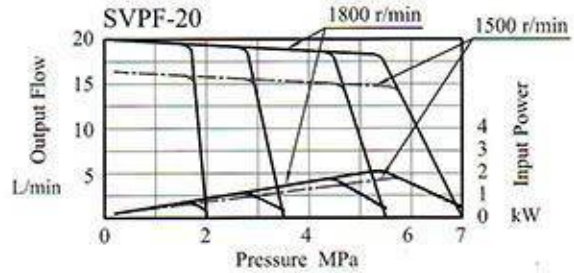

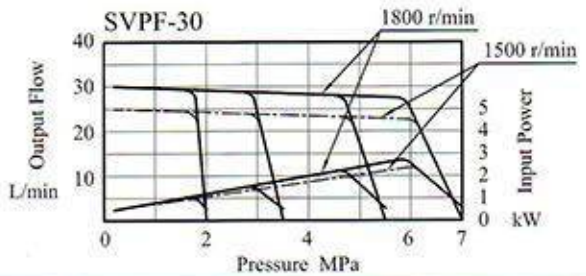

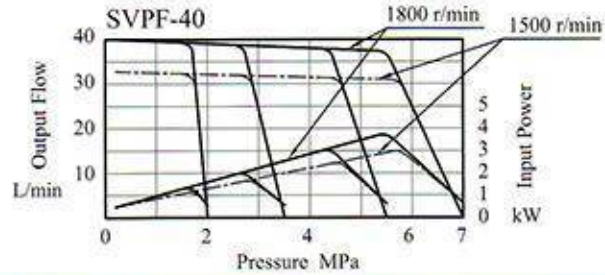

4ManPro

Elements For Manufacturing Processes

YUKEN

YUKEN HYDRAULICS (TW) CO., LTD

B

PRESSURE CONTROL VALVES

Relief Valves

Max. Pressure 25 MPa

Remote Control Relief Valve

Direct Type Relief Valve

Graphic Symbol

Remote Control / Direct Type

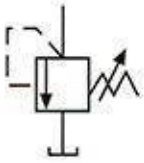

General Type Pilot Operated Relief Valve

Low Noise Type Pilot Operated Relief Valve

Graphic Symbol

Pilot Operated

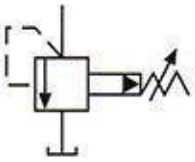

Remote Control Connection

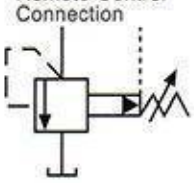

- Remote Control Relief Valves are used for hydraulic pressure control valve(Relief Valve, Pressure Reducing Valve) by remote control.
- Relief Valve is used to protect hydraulic system from excessive pressure and can also be used to maintain a constant pressure in the hydraulic system.

Specifications

Valve Type		Valve Size	Model No.	Pressure Adjustment Range MPa (kgf/cm²)	Max. Flow L/min	Mass kg
Remote Control Relief Valve		1/8	DT-01-22 DG-01-22	Max. 25 (250)	2	1.6 1.4
Direct Type Relief Valve		1/4	DT-02-※-22 DG-02-※-22	Please refer to Model Number Designation	16	1.5
Pilot Operated Relief Valve	General Type	3/8	BT-03-※-32 BG-03-※-32	0.5~25 (5~250)	100	5.0 4.7
		3/4	BT-06-※-32 BG-06-※32		200	5.0 5.6
		1-1/4	BT-10-※-32 BG-10-※-32		400	8.5 8.7
	Low Noise Type	3/8	S-BG-03-※-$\frac{L}{R}$-40	0.4~25 (4~250)	100	4.1
		3/4	S-BG-06-※-$\frac{L}{R}$-40		200	5.0

*Low-pressure control type, please contact sales people for details.

Model Number Designation

D T-02-B-22

- Design No.
- Pressure Adjustment Range MPa (kgf/cm²) (Applicable only for DT-02 & DG-02)
  - B : 0.5~7 (5~70)
  - C : 3.5~14 (35~140)
  - H : 7.0~21 (70~210)
- Valve Size
- Type of Connection
  - T : Threaded Connection
  - G : Sub-plate Mounting
- Series No.

S-B G-06-V-L-※

- Design No.
- Direction of Pressure adjustment handle (only for S-BG) (Viewed from pressure gauge connection side)
  - L : Left (Standard) ◦ R : Right
- High Venting Pressure Feature*(Optional) (Omit if not required)
  - *Use high venting pressure type to reduce the response time from unload to load.
- Valve Size
- Type of Connection
  - T : Threaded Connection (only for general type)
  - G : Sub-plate Mounting
- Series Number
- Low Noise Type (Omit if not required)

- **The Min. Flow**: The settiing prssure will be unstable when using small flow; therefore, the flow should be bigger than the min. flow as the below table.

Model No.	BG/BT Series	S-BG Series
03	8 L/min	5 L/min
06		
10	15 L/min	-

Sub-plate

Valve Model No.	Sub-plate Model No.	Piping Size Rc	Mass kg
DG-01,DG-02	DGM-02-20	1/4	0.7
(S)-BG-03	BGM-03-20	3/8	2.4
	BGM-03X-20	1/2	3.1
(S)-BG-06	BGM-06-20	3/4	4.7
	BGM-06X-20	1	5.7
BG-10	BGM-10-20	1-1/4	8.4
	BGM-10X-20	1-1/2	10.3

- Sub-plates are available. When ordering,
- Please refer to page 54, 56 for the dimensions.

Mounting Bolts (Attachment)

Model No.	Socket Head Cap Screw	Q'ty	Tightening Torque N・m
DG-01	M5 x 45 Lg	4	8~9
DG-02	M5 x 45 Lg	4	
BG-03	M12 x 70 Lg	2	104~127
	M12 x 95 Lg	2	
BG-06	M16 x 60 Lg	2	253~310
	M16 x 80 Lg	2	
BG-10	M20 x 70 Lg	2	493~603
	M20 x 90 Lg	2	
S-BG-03	M12 x 40 Lg	4	104~127
S-BG-06	M16 x 50 Lg	4	253~310

Relief Valves

Max. Pressure 25 MPa

DT-01

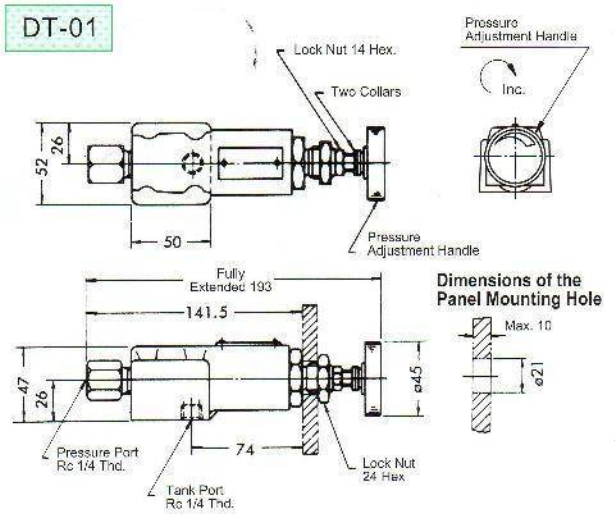

DG-01

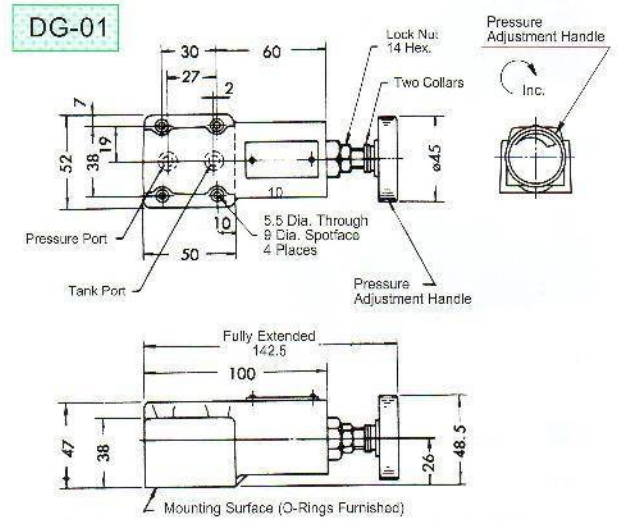

Note: For dimension of mounting surface, please refer to subplate DGM-02 below.

DT-02

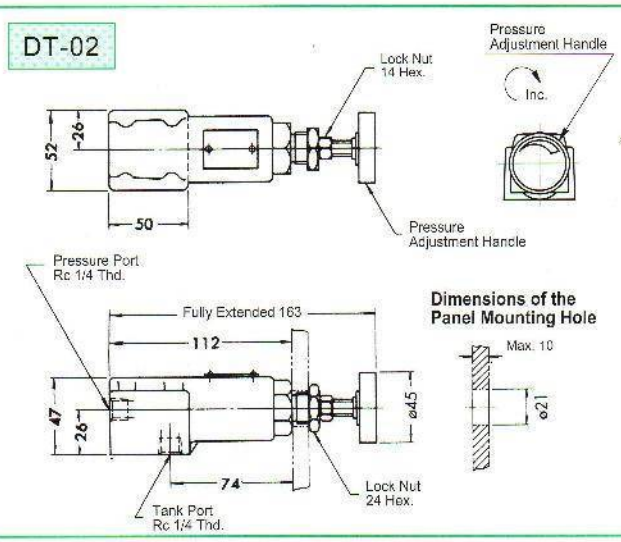

DG-02

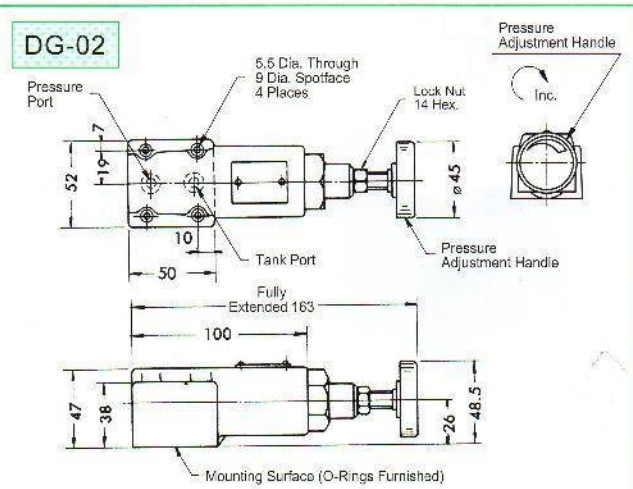

Note: For dimension of mounting surface, please refer to subplate DGM-02 below.

Subplate:DGM-02-20

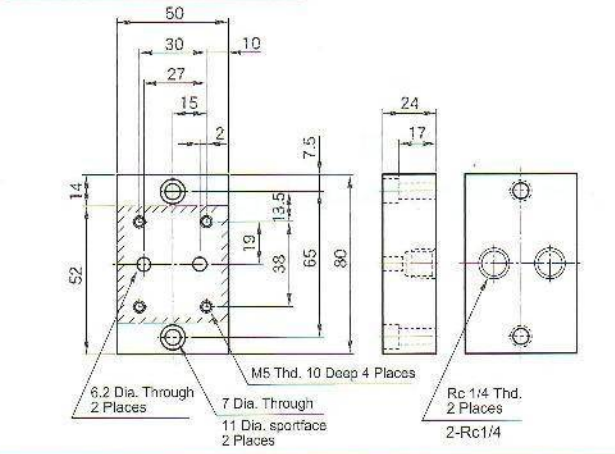

Relief Valves

Max. Pressure 25 MPa

BT-03,06,10

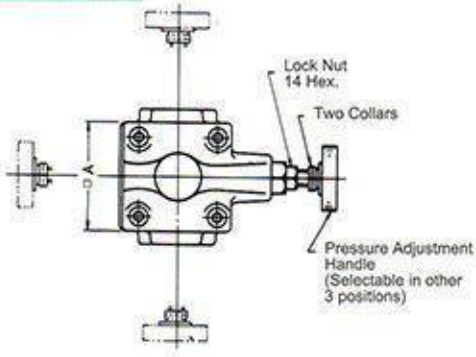

Model No.	A	B	C	D	E	F
BT-03	75	40	105	52	78	150.5
BT-06						
BT-10	85	50	101	80	96	183

Model No.	G	H	J	K	L	N	P
BT-03	68.5	62	36	52	90	45	3/8
BT-06							3/4
BT-10	89	74	49	80	120	60	1-1/4

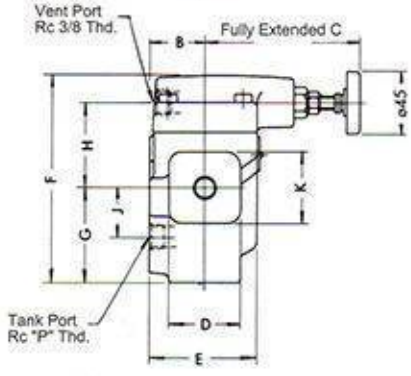

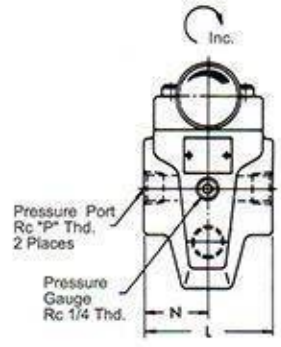

BG-03,06,10

Mounting Surface
BG-03:ISO 6264-AR-06-2-A-87
BG-06:ISO 6264-AS-08-2-A-87
BG-10:ISO 6264-AT-10-2-A-87

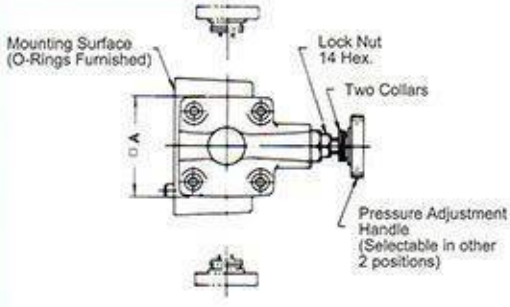

Model No.	A	B	C	D	E	F	G
BG-03	75	40	105	57	78	78	137
BG-06	75	40	105	40	60	78	161
BG-10	85	45	101	47	67	84	195

Model No.	H	J	K	L
BG-03	14.1	41	82	117
BG-06	17	52	104	141
BG-10	20.7	62	124	175

Model No.	N	P	Q	S
BG-03	77	22	13.5	21
BG-06	83.5	4.5	17.5	26
BG-10	110	6	21.5	32

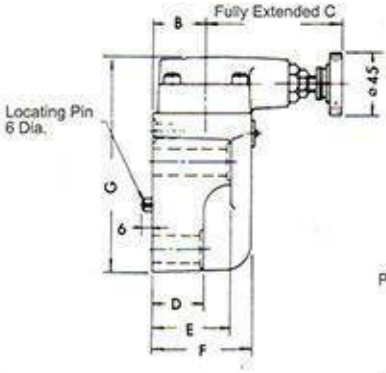

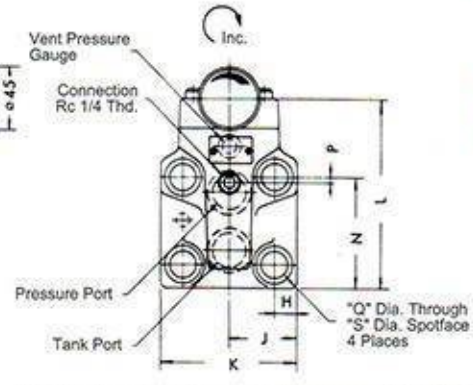

Note: For dimensions of mounting surface, please refer to BGM type sub-plate (on next page)

B Relief Valves

Max. Pressure 25 MPa

S-BG-03/06-※-L-※-40
Normal Handle Position

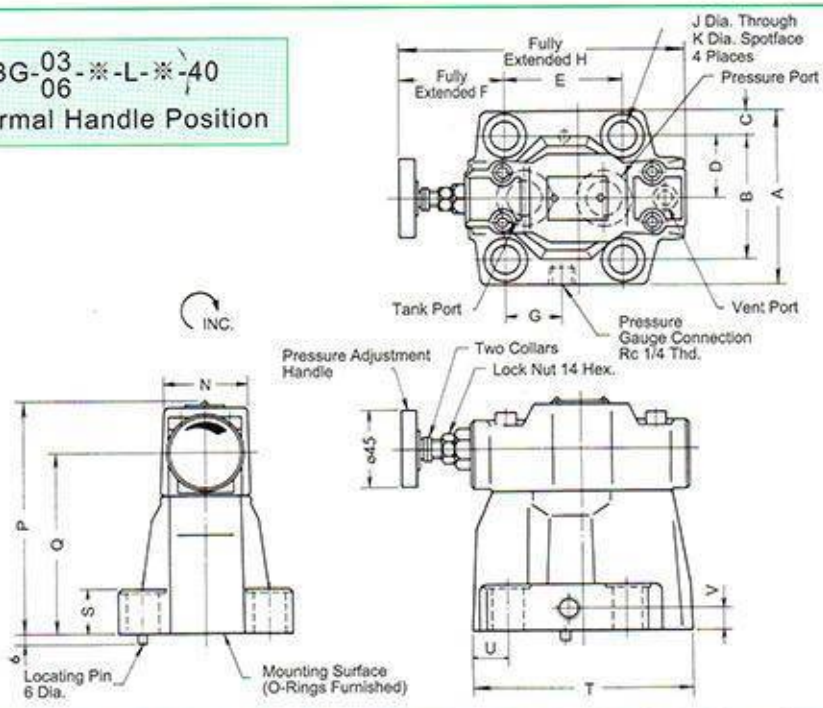

Mounting Surface:
S-BG-03:ISO 6264-AR-06-2-A-87
S-BG-06:ISO 6264-AS-08-2-A-87

Opposite Handle Position
S-BG-06-※-R

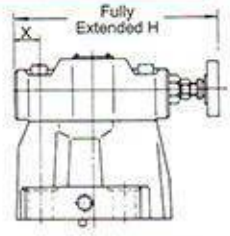

For other dimensions, please see the figures shown left.

Model No.	A	B	C	D	E	F	G	H	J	K	N	P	Q	S	T	U	V	X
S-BG-03	76	53.8	11.1	26.9	53.8	73.6	26.9	163.5	13.5	21	50	130	103	21.5	106	26.1	13	36.1
S-BG-06	98	70	14	35	66.7	58.8	33.7	163.5	17.5	26	50	130	103	26	122	19.3	13	21.3

Sub-plate
BGM-03, 03X-20
06, 06X
10, 10X

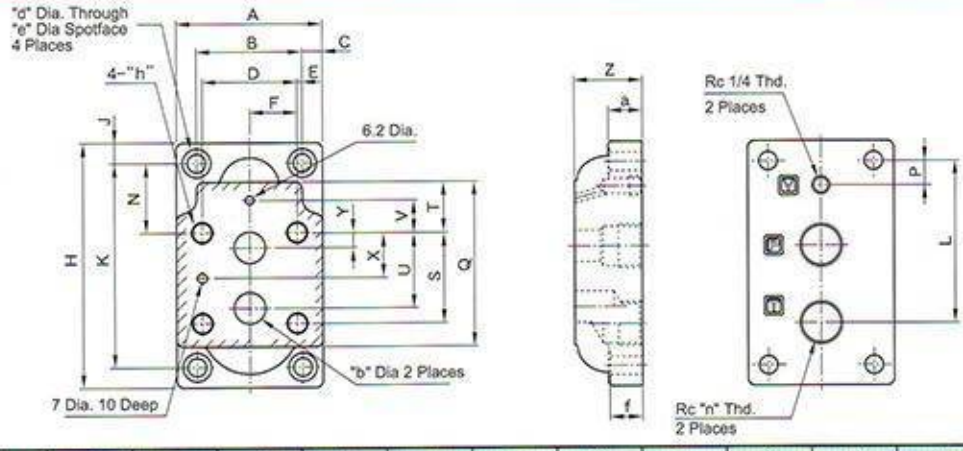

Model No.	A	B	C	D	E	F	H	J	K	L	N	P	Q	S
BGM-03	86	60	13	53.8	3.1	26.9	149	13	123	86	32	26	97	53.8
BGM-03X										95		21		
BGM-06	108	78	15	70	4	35	180	15	150	106.5	51	27.2	121	66.7
BGM-06X										119		18		
BGM-10	126	94	16	82.6	5.7	41.3	227	16	195	138.2	62	30.2	154	88.9
BGM-10X										158		17		

Model No.	T	U	V	X	Y	Z	a	b	d	e	f	h	n
BGM-03	19	47.4	0	22	22	32	20	14.5	11	17.5	19	M12 Thd. 20 Deep	3/8
BGM-03X						40							1/2
BGM-06	37	55.5	23.8	33.4	11	40	25	23	13.5	21	24	M16 Thd. 25 Deep	3/4
BGM-06X						50							1
BGM-10	42	76.2	31.8	44.5	12.7	50	32	28	17.5	26	31	M20 Thd. 28 Deep	1-1/4
BGM-10X						63							1-1/2

Solenoid Controlled Relief Valves Max. Pressure 25 MPa

General Type Solenoid Controlled Relief Valve

Low Noise Type Solenoid Controlled Relief Valve

These valves are a combination of relief valve and solenoid valve. Piping between the two valves is eliminated as the solenoid valve is directly mounted on the relief valve and connected with the relief valve vent. Pump pressure may be unloaded remotely by an electrical signal to the solenoid, or by connecting the pilot relief valve to the solenoid valve ports.

Specifications

Valve Type	Valve Size	Model No.	Pressure Adjustment Range MPa (kgf/cm²)	Max. Flow L/min	Mass kg*	
					Single Sol.	Double Sol.
General Type Solenoid Controlled Relief Valve	3/8	BST-03-※-※-※-46	0.5~25 (5~250)	100	6.8	7.4
		BSG-03-※-※-※-46			6.5	7.1
	3/4	BST-06-※-※-※-46		200	6.8	7.4
		BSG-06-※-※-※-46			7.4	8.0
	1-1/4	BST-10-※-※-※-46		400	10.5	11.1
		BSG-10-※-※-※-46			10.7	11.3
Low Noise Type Solenoid Controlled Relief Valve	3/8	S-BSG-03-※-※-※-R/L-51	0.4~25 (4~250)	100	5.7	6.3
	3/4	S-BSG-06-※-※-※-R/L-51		200	6.6	7.2

*For models with vent restrictors, add 1kg.

Model Number Designation

A-S-BS G-06-V-3C2-A110-N1-L-※

- *1 With Vent Restrictor (Omit if not required)
- Low Noise Type (Omit if not required)
- Series Number
- Type of connection
  - T: Threaded connection*for solenoid controlled relief valve only*
  - G:Sub-plate Mounting
- Valve Size
- High Venting Pressure Feature (Omit if not required) *2
- Vent Type (Refer to graphical symbol)
- Coil Type *3 D24, A110, A220, R110, R220...etc.
- Electrical Conduit Connection *3
- Direction of Pressure Adjustment Handle (only for S-BSG) (Viewed from Pressure Gauge connection side) L: Left (Standard) • R: Right
- Design Number

*1.Models with vent restrictor (ST-797-40) are applicable only for the vent type 2B3A and 2B3B. It prevents shocks to the main circuit by gradually lowering the venting pressure in the shift from the set pressure to unloading. The hydraulic fluid viscosity remains the range of 15~200cSt. The bolt kits should be 30 mm longer when mounting solenoid controlled relief valves.

*2.Use high-venting pressure type to reduce response time from unloading to onloading.

*3.The coil type is the same as that of the solenoid operated directional valve DSG-01.(Page 86)

*4.The minimum using flow is restricted. Please refer to page 53. BG/BT/S-BG series.

Graphic Symbol

Vent type

2B3A	2B3B
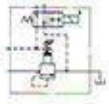	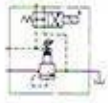
2B2B	2B2
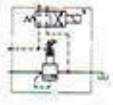	
3C2	3C3
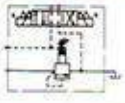	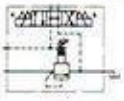

With Vent Restrictor (A-BS※)

2B3A	2B3B
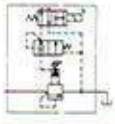	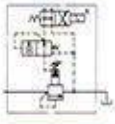

Sub-Plate

Valve Model No.	Sub-plate Model No.	Piping Size Rc	Mass kg
(S)-BSG-03	BGM-03-20	3/8	2.4
	BGM-03X-20	1/2	3.1
(S)-BSG-06	BGM-06-20	3/4	4.7
	BGM-06X-20	1	5.7
BSG-10	BGM-10-20	1-1/4	8.4
	BGM-10X-20	1-1/2	10.3

Please refer to page 56 for dimension details.

Mounting Bolts (Attachment)

Model No.	Socket Head Cap	Screw Q'ty	Tightening Torque N•m
BSG-03	M12 x 70 Lg	2	104~127
	M12 x 95 Lg	2	
BSG-06	M16 x 60 Lg	2	253~310
	M16 x 80 Lg	2	
BSG-10	M20 x 70 Lg	2	493~603
	M20 x 90 Lg	2	
S-BSG-03	M12 x 40 Lg	4	104~127
S-BSG-06	M16 x 50 Lg	4	253~310

Solenoid Controlled Relief Valves

Max. Pressure 25 MPa

BST-03,06,10

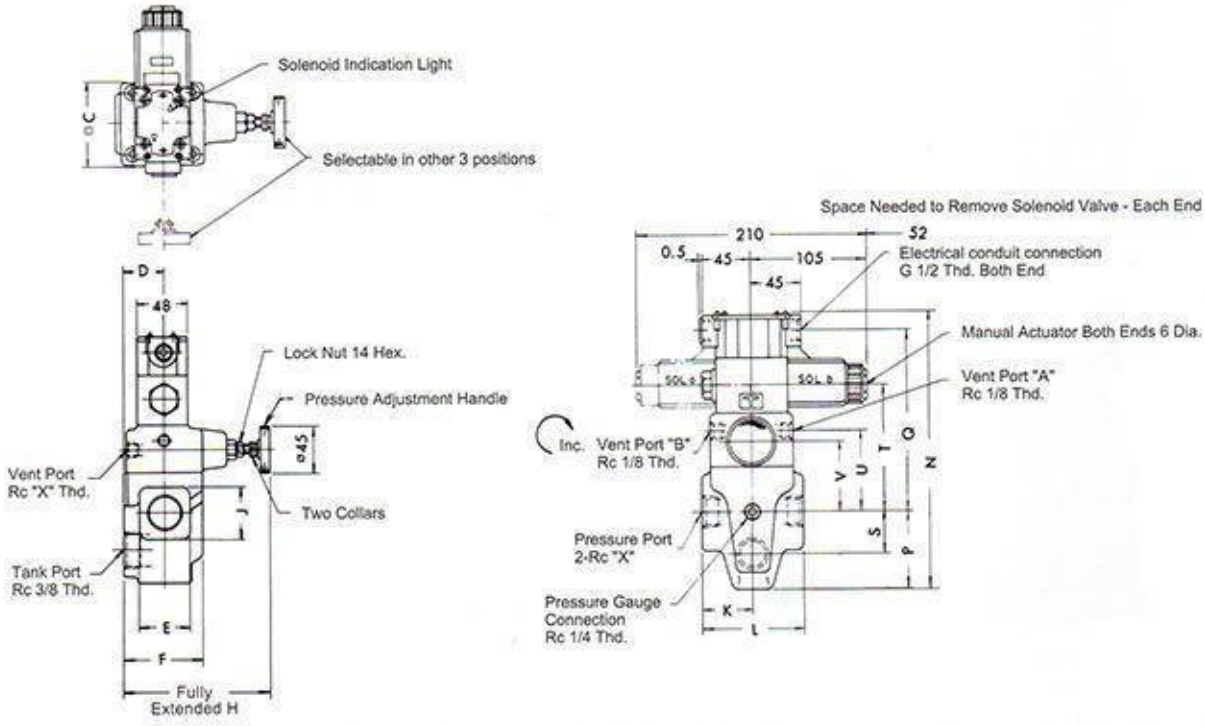

Model No.	C	D	E	F	H	J	K	L	N	P	Q	S	T	U	V	X
BST-03	75	40	52	78	145	52	45	90	240.8	68.5	154	36	107	69	62	3/8
BST-06																3/4
BST-10	85	50	80	96	151	80	60	120	273.3	89	166	49	119	81	74	1-1/4

Note: For detailed dimensions of Solenoid Operated Directional Valves (page 87,88).

Options-Model with Vent Restrictor: A-BST-03, 06, 10

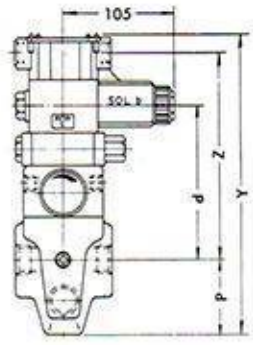

Model No.	P	Y	Z	d
A-BST-03	68.5	270.8	185	137
A-BST-06				
A-BST-10	89	303.3	197	149

For other dimensions, please refer to the dimensions of each model as listed in the table in the upper drawing.

Solenoid Controlled Relief Valves

Max. Pressure 25 MPa

BSG-03,06,10

Mounting Surface
BSG-03:ISO 6264-AR-06-2-A-87
BSG-06:ISO 6264-AS-08-2-A-87
BSG-10:ISO 6264-AT-10-2-A-87

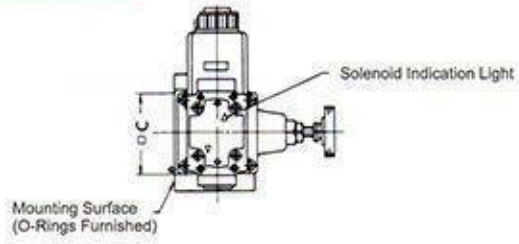

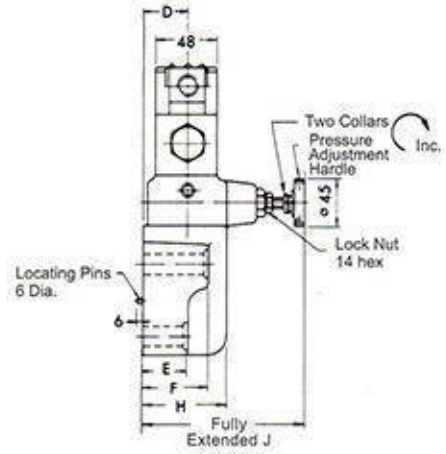

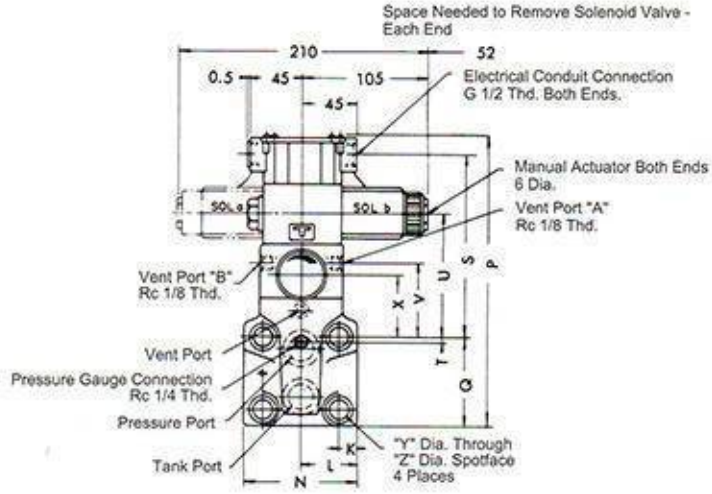

Model No.	C	D	E	F	H	J	K	L	N	P	Q	S	T	U	V	X	Y	Z
BSG-03	75	40	57	78	78	145	14.1	41	82	227.3	77	132	22	85	47	40	13.5	21
BSG-06	75	40	40	60	78	145	17	52	104	251.3	83.5	149.5	4.5	102.5	64.5	57.5	17.5	26
BSG-10	85	45	47	67	84	146	20.7	62	124	285.3	110	157	6	110	72	65	21.5	32

Note: For dimensions of mounting surface, please refer to BGM type sub-plate (page 56).
For detailed dimensions of Solenoid Operated Directional Valve (page 87,88).

Options-Model with Vent Restrictor: A-BSG-03, 06, 10

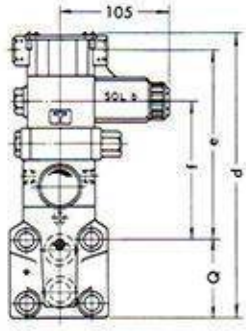

Model No.	Q	d	e	f
A-BSG-03	77	257.3	163	115
A-BSG-06	83.5	281.3	180.5	132.5
A-BSG-10	110	315.3	188	140

For other dimensions, please refer to the dimensions of each model as listed in the table in the upper drawing.

Solenoid Controlled Relief Valves

Max. Pressure 25 MPa

S-BSG-$\frac{03}{06}$-※-※-※-※-L-51
Normal Handle Position

Mounting Surface:
S-BSG-03:ISO 6264-AR-06-2-A-87
S-BSG-06:ISO 6264-AS-08-2-A-87

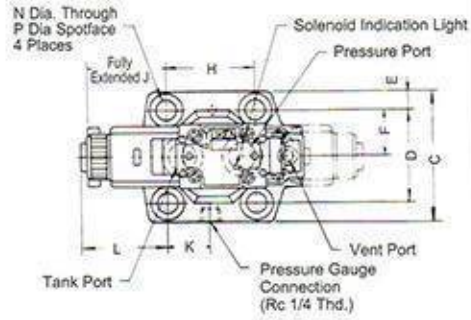

Opposite Handle Position
S-BSG-03.06-※-※-※-※-R

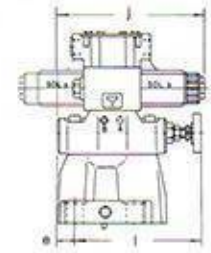

For other dimensions, please see the figures shown left.

Options-Model with Vent Restrictors
A-S-BSG-$\frac{03}{06}$

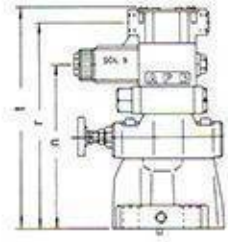

For other dimensions, please see the figures shown left.

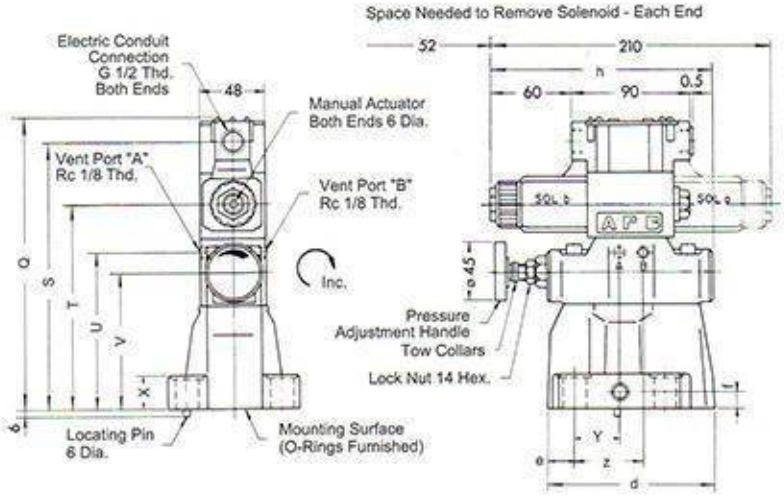

Model No.	C	D	E	F	H	J	K	L	N	P	Q	S	T	U
S-BSG-03	76	53.8	11.1	26.9	53.8	73.6	26.9	78.1	13.5	21	218.3	200	153	117
S-BSG-06	98	70	14	35	66.7	58.8	33.7	63.3	17.5	26	218.3	200	153	117

Model No.	V	X	Y	Z	d	e	f	h	i	j	n	r	t
S-BSG-03	103	21.5	17.1	36.6	106	26.1	13	158	127.9	168	183	230	248.3
S-BSG-06	103	26	31.9	51.4	122	19.3	13	166	142.2	166	183	230	248.3

Note: For dimensions of mounting surface, please refer to BGM-03/06 type sub-plate (page 56).
For detailed dimensions of Solenoid Operated Directional Valve (page 87, 88).

YUKEN
OIL HYDRAULIC EQUIPMENT

B

H Type Pressure Control Valves
HC Type Pressure Control Valves

Max. Pressure 21 MPa

HG Type

HCG Type

These valves are pressure control valves directly operated with hydraulic buffer, which can be actuated by internal or external pilot pressure. The valves with an integral check valve are also available. These valves can be used in such a case where free reverse flow from the secondary port to primary port is required. There are various type of valves available including sequence, counterbalance, unloading and low pressure relief valves, all of which are operated by a pressure rise in the circuit being sensed either internally or remotely. (Please refer to Graphic Symbol)

Specifications

Valve Size	Model No.	Pressure Adjustment MPa (kgf/cm^2)	Max. Flow L/min	Mass kg
3/8	HT-03-※※-※-22	L : 0.25 ~ 0.45 (2.5 ~ 4.5)	50	3.7
	HG-03-※※-※-22			4.0
	HCT-03-※※-※-22	M : 0.45 ~ 0.9 (4.5~9)		4.1
	HCG-03-※※-※-22			4.8
3/4	HT-06-※※-※-22	N : 0.9 ~ 1.8 (9 ~ 18)	125	6.2
	HG-06-※※-※-22			6.1
	HCT-06-※※-※-22	A : 1.8 ~ 3.5 (18 ~ 35)		7.1
	HCG-06-※※-※-22			7.4
1-1/4	HT-10-※※-※-22	B : 3.7 ~ 7.0 (35 ~ 70)	250	12.0
	HG-10-※※-※-22			11.0
	HCT-10-※※-※-22 *1	C : 7.0 ~ 14 (70 ~ 140)		13.8
	HCG-10-※※-※-22			13.8

Model Number Designation

HC T-03-C 3-P-22

- Series Number
  - H: H Type Pressure Control Valves
  - HC: HC Type Pressure Control Valves (one way)
- Type of Connection
  - T: Threaded Connection
  - G: Sub-plate Mounting
- Valve Size (03, 06,10)
- Pressure Adjustment Range (MPa) *3 L,M,N,A,B,C
- Valve Type (Refer to graphical symbol 1,2,3,4)
- *2 With Auxiliary Pilot Pressure (Omit if not required)
- Design Number

*1.Products are made by Yuken Kogyo. If you have any inquiry, please contact our sales engineers.
*2.Models with auxiliary pilots are used where valves must be operated under a lower external pilot pressure than the adjusted pressure. This does not apply to pressure adjustment ranges L, M and H of valve type 1.
*3.In addition, type 1 is only possible for pressure adjustment ranges L and M.(applicable only for H type)

Graphic Symbol

Series No.	Valve Type	Auxiliary Port: Without	Auxiliary Port: With (P)
H※	Type 1 Low Pressure Relief Valve		—
	Type 2 Sequence Valve		
	Type 3 Sequence Valve		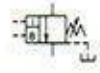
	Type 4 Unloading valve		
HC※	Type 1 Counterbalance Valve	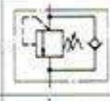	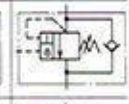
	Type 2 Sequence and Check Valve		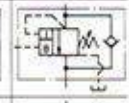
	Type 3 Sequence and Check Valve	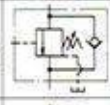	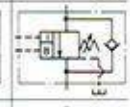
	Type 4 Counterbalance Valve	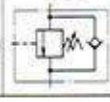	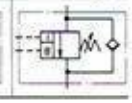

Mounting Bolts (Attachment)

Model No.	Socket Head Cap	Screw Q'ty	Tightening Torque N•m
HG-03	M10 x 50 Lg	4	60~74
HCG-03	M10 x 70 Lg	4	
HG-06	M10 x 50 Lg	4	
HCG-06	M10 x 80 Lg	4	
HG-10	M10 x 50 Lg	6	
HCG-10	M10 x 90 Lg	6	

Sub-plate

Valve Model No.	Sub-plate Model No.	Piping Size Rc	Mass kg
HG HCG -03-※※-22	HGM-03-20	3/8	1.6
	HGM-03X-20	1/2	
HG HCG -03-※※-P-22	HGM-03-P-20	3/8	2.0
	HGM-03X-P-20	1/2	
HG HCG -06-※※-22	HGM-06-20	3/4	2.4
	HGM-06X-20	1	3.0
HG HCG -06-※※-P-22	HGM-06-P-20	3/4	2.4
	HGM-06X-P-20	1	3.0
HG HCG -10-※※-22	HGM-10-20	1-1/4	4.8
	HGM-10X-20	1-1/2	5.7
HG HCG -10-※※-P-22	HGM-10-P-20	1-1/4	4.8
	HGM-10X-P-20	1-1/2	5.7

Sub-plates are available. When ordering, please specify sub-plate modelfrom the table above (page 66).

H Type Pressure Control Valves

Max. Pressure 21 MPa

HT-03, 06, 10
Type 3: Sequence Valve
(External Pilot, External Drain)

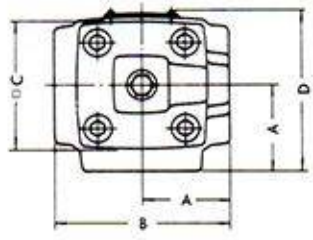

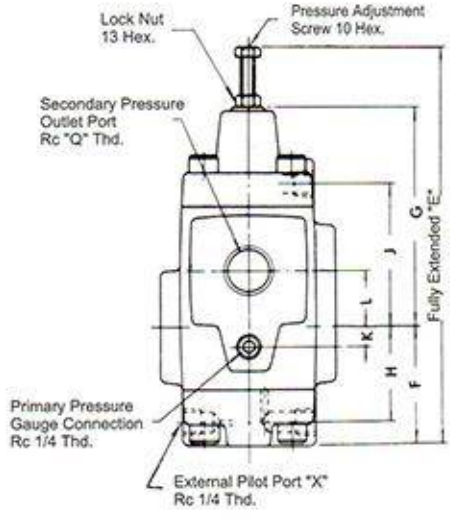

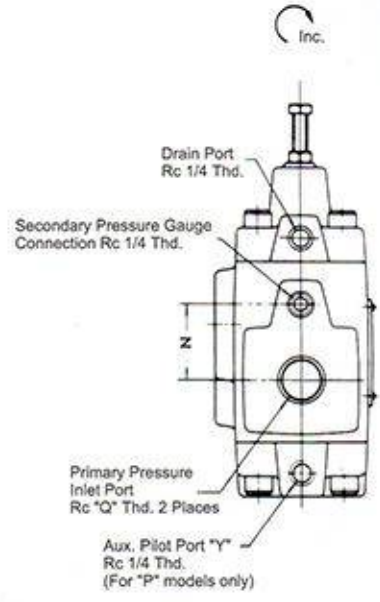

Model No.	A	B	C	D	E	F	G	H	J	K	L	N	Q
HT-03	41	82	60	74	191	57	106	43	70	0	28	28	3/8
HT-06	48	96	73	87	221	64.5	123.5	50.5	80.5	9	33	42	3/4
HT-10	66	132	86	112	272	84	149	66	98	12	40	52	1-1/4

Type 1: Low Pressure Relief Valve
(Internal Pilot, Internal Drain)

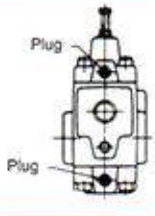

Type 2: Sequence Valve
(Internal Pilot, External Drain)

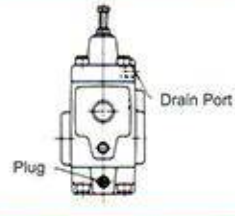

Type 4: Unloading Valve
(External Pilot, Internal Drain)

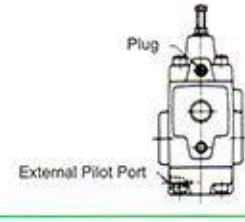

H Type Pressure Control Valves

Max. Pressure 21 MPa

HG-03, 06
Type 3:Sequence Valve
(External Pilot, External Drain)

Mounting Surface:
HG-03:ISO 5781-AG-06-2-A-87
HG-06:ISO 5781-AH-08-2-A-87

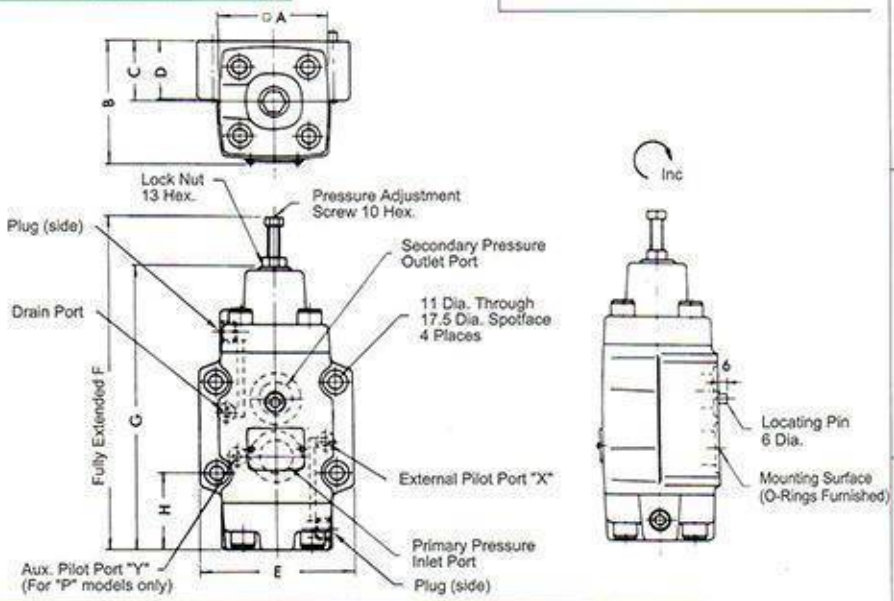

Model No.	A	B	C	D	E	F	G	H
HG-03	60	67	35	39	89	191	163	49.6
HG-06	73	79	40	39	102	221	188	51

Note: For dimensions of mounting surface, please refer to HGM-03 & 06 type sub-plate.(page 66)

Type 1: Low Pressure Relief Valve
(Internal Pilot, Internal Drain)

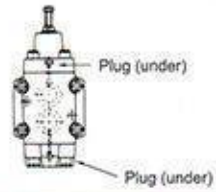

Type 2: Sequence Valve
(Internal Pilot, External Drain)

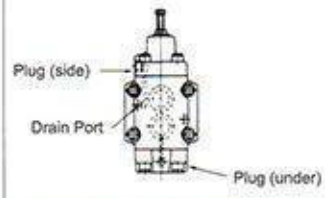

Type 4: Unloading Valve
(External Pilot, Internal Drain)

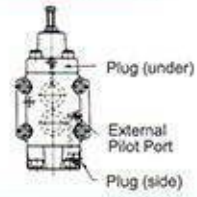

HG-10
Type 3:Sequence Valve
(External Pilot, External Drain)

Mounting Surface: ISO 5781-AJ-10-2-A-87

Note: For dimensions of mounting surface, please refer to HGM-10 type sub-plate. (page 66)

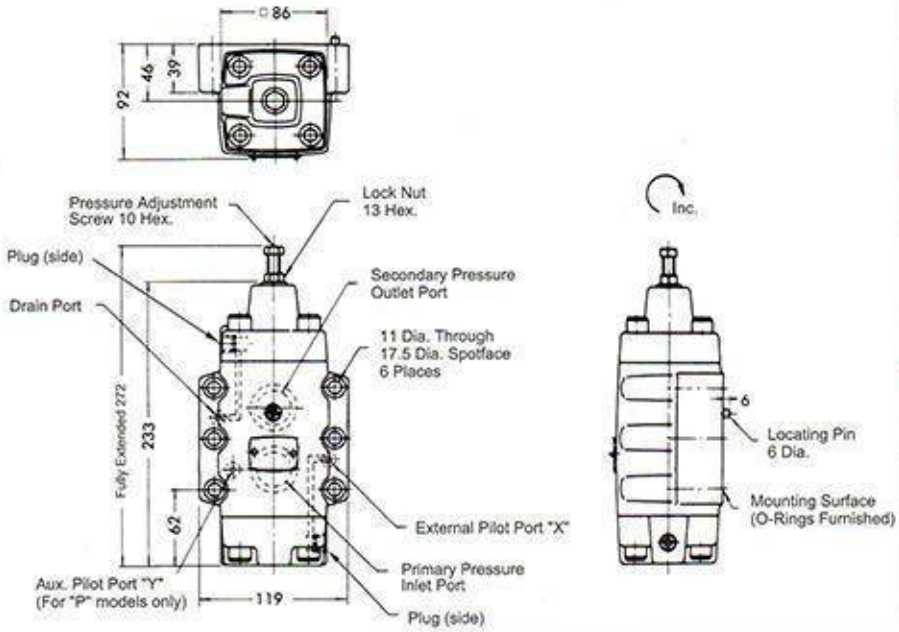

Type 1: Low Pressure Relief Valve
(Internal Pilot, Internal Drain)

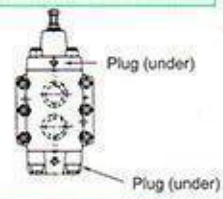

Type 2: Sequence Valve
(Internal Pilot, External Drain)

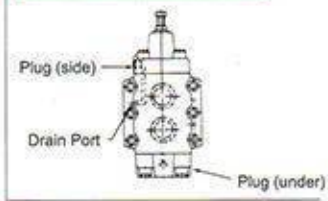

Type 4: Unloading Valve
(External Pilot, Internal Drain)

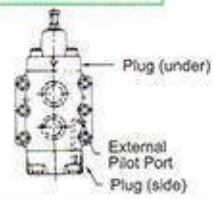

HC Type Pressure Control Valves Max. Pressure 21 MPa

HCT-03, 06, 10
Type 3: Sequence and Check Valve
(External Pilot, External Drain)

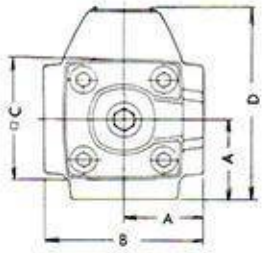

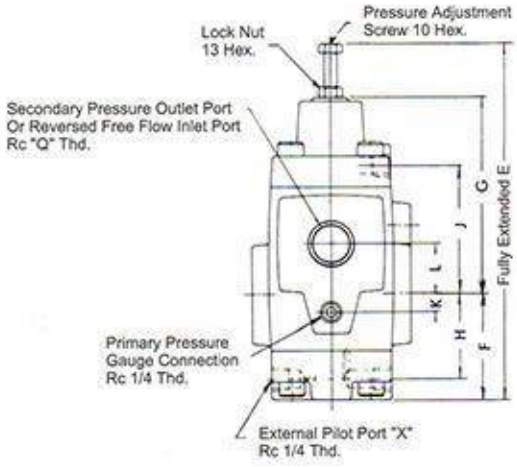

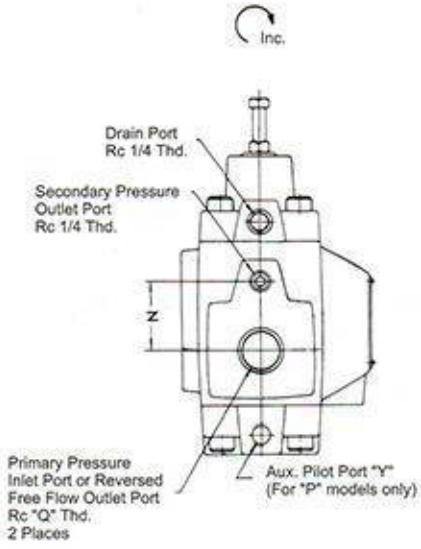

Model No.	A	B	C	D	E	F	G	H	J	K	L	N	Q
HCT-03	41	82	60	96	191	57	106	43	70	0	28	28	3/8
HCT-06	48	96	73	116	221	64.5	123.5	50.5	80.5	9	33	42	3/4
HCT-10	66	132	86	152	272	84	149	66	98	12	40	52	1-1/4

Type 1: Counterbalance Valve
(Internal Pilot, Internal Drain)

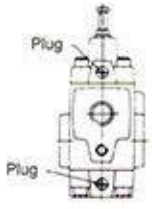

Type 2: Sequence and Check Valve
(Internal Pilot, External Drain)

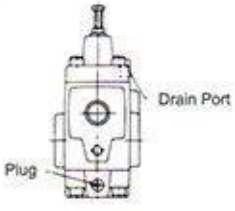

Type 4: Counterbalance Valve
(External Pilot, Internal Drain)

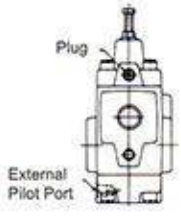

HC Type Pressure Control Valves Max. Pressure 21 MPa

HCG-03, 06
Type 3: Sequence and Check Valve
(External Pilot, External Drain)

Mounting Surface:
HCG-03: ISO 5781-AG-06-2-A-87
HCG-06: ISO 5781-AH-08-2-A-87

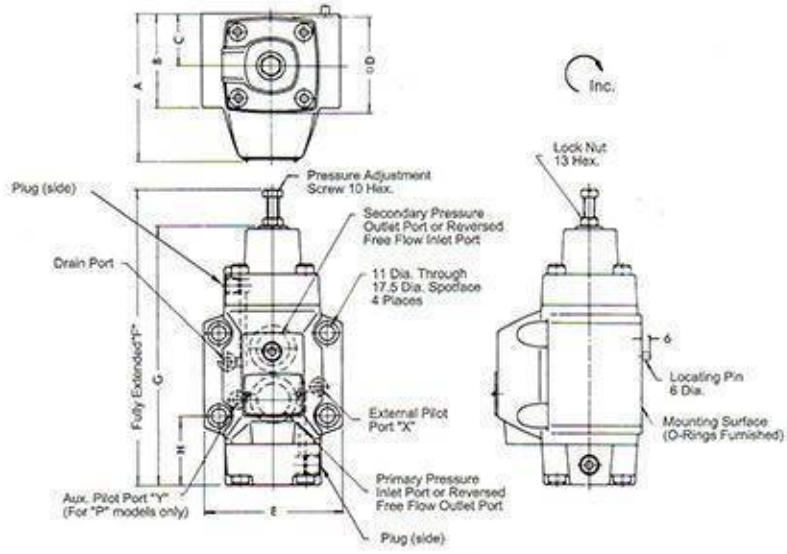

Model No	A	B	C	D	E	F	G	H
HCG-03	90	59	35	60	89	191	163	49.6
HCG-06	108	69	40	73	102	221	188	51

Note: For dimensions of mounting surface, please refer to HGM-03 & 06 type sub-plate (page 66).

Type 1: Counterbalance Valve
(Internal Pilot, Internal Drain)

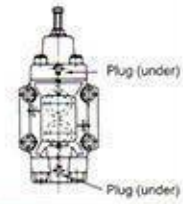

Type 2: Sequence and Check Valve
(Internal Pilot, External Drain)

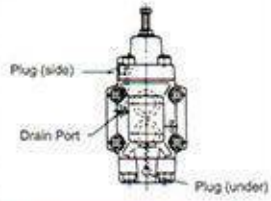

Type 4: Counterbalance Valve
(External Pilot, Internal Drain)

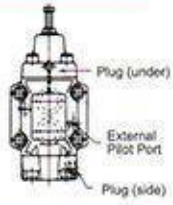

HCG-10
Type 3: Sequence and Check Valve
(External Pilot, External Drain)

Mounting Surface: ISO 5781-AJ-10-2-A-87

Note: For dimensions of mounting surface, please refer to HGM-10 type sub-plate (page 66).

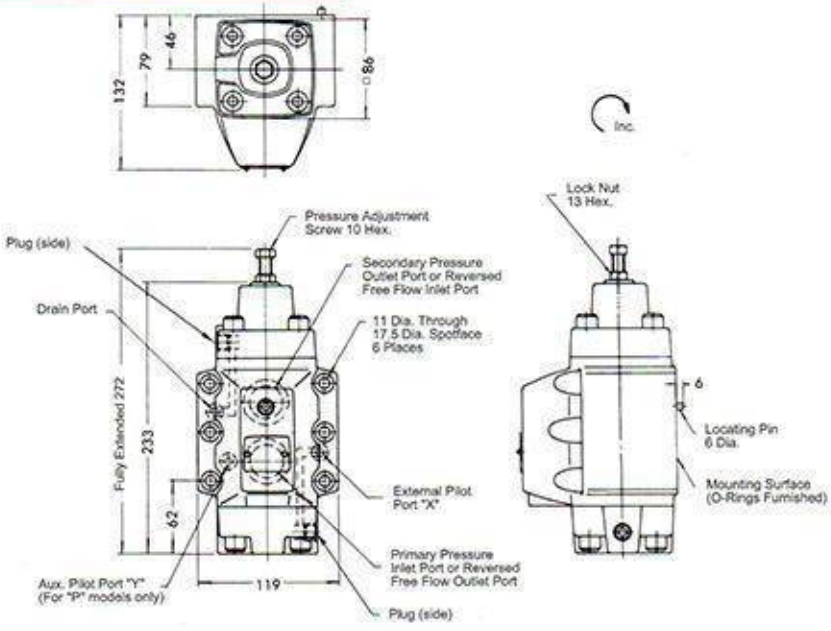

Type 1: Counterbalance Valve
(Internal Pilot, Internal Drain)

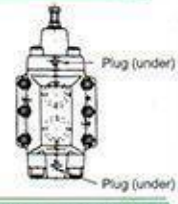

Type 2: Sequence and Check Valve
(Internal Pilot, External Drain)

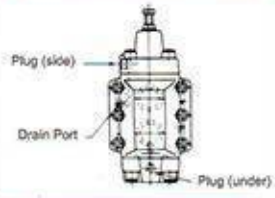

Type 4: Counterbalance Valve
(External Pilot, Internal Drain)

B

H Type Pressure Control Valves
HC Type Pressure Control Valves

Max. Pressure 21 MPa

Sub-plate HCM-03/03X-20

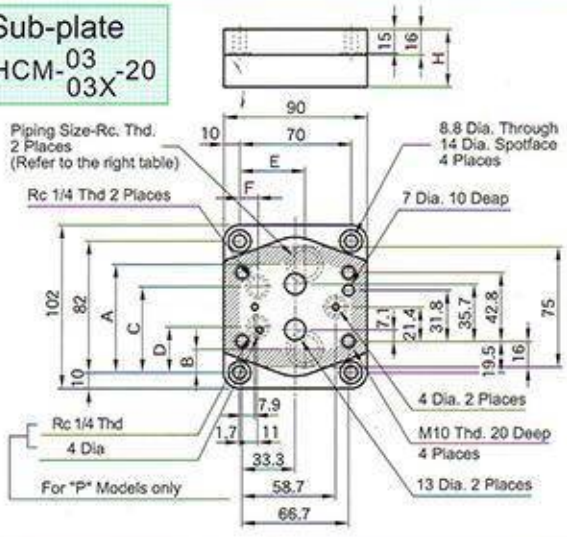

Sub-plate Model No.	Piping Size Rc	A	B	C	D	E	F	G
HGM-03-20	3/8	61	21	40.9	-	35	9.6	32
HGM-03X-20	1/2							
HGM-03-P-20	3/8	69.5	12.5	53.5	28.5	35	11.5	36
HGM-03X-P-20	1/2	67.5	14.5			41		

Sub-plate HGM-06/06X-20

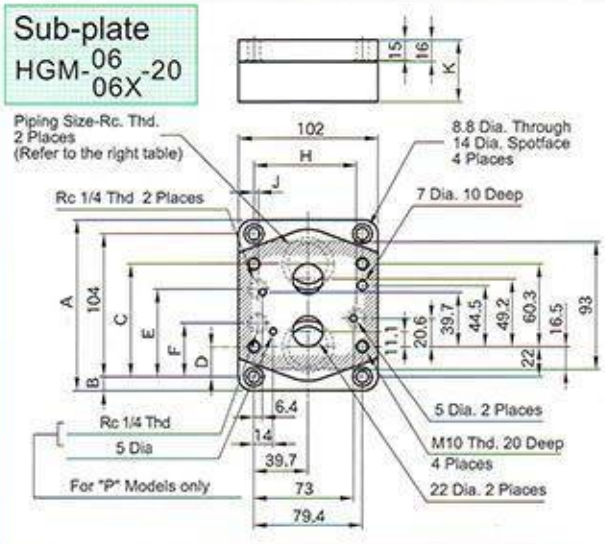

Sub-plate Model No.	Piping Size Rc	A	B	C	D	E	F	G	H	J
HGM-06-20	3/4	124	10	77	27	61.7	-	73	6.4	36
HGM-06X-20	1	136	16	82.3	22	61.7	-	75	6.4	45
HGM-06-P-20	3/4	124	10	77	27	64	39	73	3	36
HGM-06X-P-20	1	136	16	82.3	22	64	39	75	3	45

Sub-plate HGM-10/10X-20

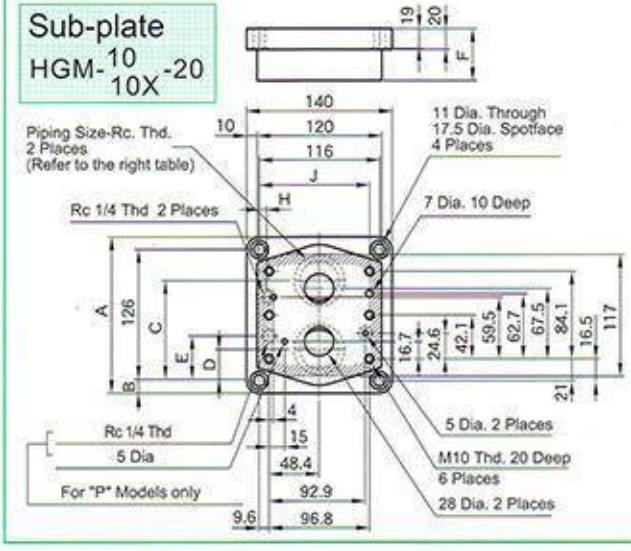

Sub-plate Model No.	Piping Size Rc	A	B	C	D	E	F	H	J
HGM-10-20	1-1/4	150	12	96	30	-	45	13.6	102.5
HGM-10X-20	1-1/2	177	25.5	104	22	-	50	13.6	102.5
HGM-10-P-20	1-1/4	150	12	96	30	43	45	9.6	102.5
HGM-10X-P-20	1-1/2	177	25.5	104	22	43	50	9.6	106

YUKEN
OIL HYDRAULIC EQUIPMENT

B

Pressure Reducing Valves
Pressure Reducing & Check Valves

Max. Pressure 21 MPa

RG Type

- These valves are used to limit the pressure in a part of the circuit to something lower than that required in the main circuit. The valves may be controlled by pilot pressure from a remote control port.
- They are available with integral check valves for use when free reverse flow from the secondary port to the primary port is required.

Specifications

Valve Size	Model No.	Setting Pressure MPa	Max. Flow L/min *1	Mass kg
3/8	RT-03-※-22	0.7 ~ 1.0	40	4.3
	RG-03-※-22			4.5
	RCT-03-※-22	1.0 ~ 20.5	50	4.8
	RCG-03-※-22			5.4
3/4	RT-06-※-22	0.7 ~ 1.0	50	6.9
	RG-06-※-22	1.0 ~ 1.5	100	6.8
	RCT-06-※-22			7.8
	RCG-06-※-22	1.5 ~ 20.5	125	8.1
1 1/4	RT-10-※-22 *2	0.7 ~ 1.0	130	12.0
	RG-10-※-22 *2	1.0 ~ 1.5	180	11.0
	RCT-10-※-22 *2	1.5 ~ 10.5	220	13.8
	RCG-10-※-22 *2	10.5 ~ 20.5	250	13.8

*1. The Max. flow rates are those shown at the primary pressure of 21MPa (210kgf/cm²)
*2. Products are made by Yuken Kogyo. If you have any inquiry, please contact our sales engineers.

Graphic Symbol

RT. RG

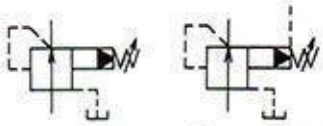

Remote Control Connection

Model Number Designation

RC T-03-B-22

- Series Number
  - R: Pressure Reducing Valve
  - RC: Pressure Reducing & Check Valve
- Type of Connection
  - T: Threaded Connection
  - G: Sub-plate Mounting
- Valve Size (03, 06, 10)
- Pressure Adjustment Range MPa (kgf/cm²)
  - B: 0.7~7.0 (7~70)
  - C: 3.5~14.0 (35~140)
  - H: 7.0~20.5 (70~205)
- Design Number

RCG Type

Mounting Bolts (Attachment)

Model No.	Socket Head Cap Screw	Q'ty	Tightening Torque N•m
RG-03	M10 x 50 Lg	4	60~74
RCG-03	M10 x 70 Lg	4	
RG-06	M10 x 50 Lg	4	
RCG-06	M10 x 80 Lg	4	
RG-10	M10 x 50 Lg	6	
RCG-10	M10 x 90 Lg	6	

Graphic Symbol

RCT. RCG

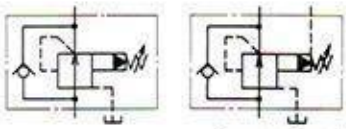

Remote Control Connection

Sub-Plate

Valve Model No.	Sub-plate Model No.	Piping Size Rc	Mass kg
RG RCG -03	HGM-03-20	3/8	1.6
	HGM-03X-20	1/2	
RG RCG -06	HGM-06-20	3/4	2.4
	HGM-06X-20	1	3.0
RG RCG -10	HGM-10-20	1-1/4	4.8
	HGM-10X-20	1-1/2	5.7

*1. The sub-plates are available. Please specify sub-plate model from the table above. Please refer to page 66 for dimension details.
*2. Note: The sub-plates are the same as those for H and HC type pressure controlled valve. With the pressure reducing valve, the sub-plate is used in a position 180° turned (upside down) from the normal position.

Pressure Reducing Valves

Max. Pressure 21 MPa

RT-03

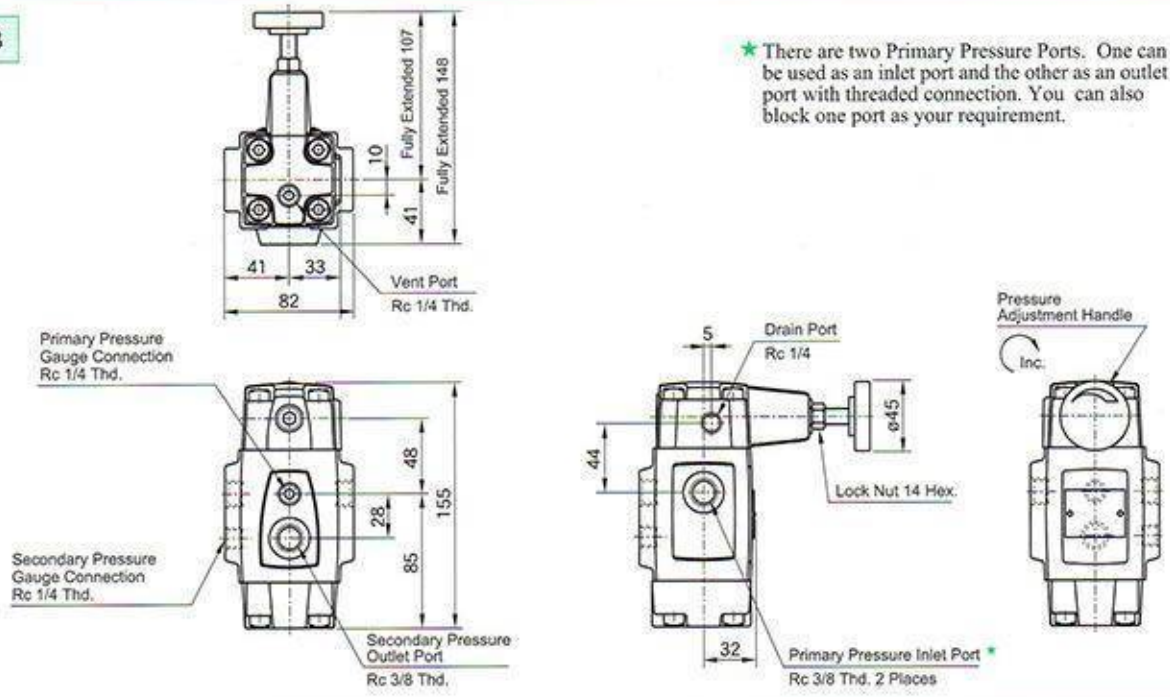

★ There are two Primary Pressure Ports. One can be used as an inlet port and the other as an outlet port with threaded connection. You can also block one port as your requirement.

RT-06.10

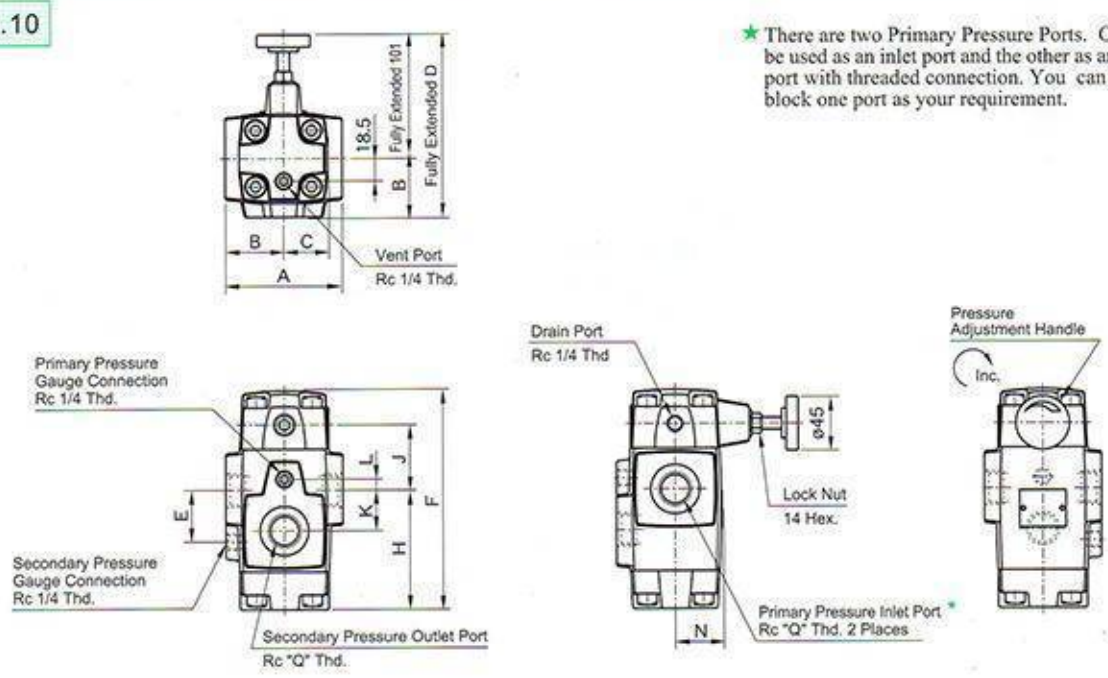

★ There are two Primary Pressure Ports. One can be used as an inlet port and the other as an outlet port with threaded connection. You can also block one port as your requirement.

Model No.	A	B	C	D	E	F	H	J	K	L	N	Q
RT-06	96	48	36.5	149	42	179	97.5	53.5	33	9	39	3/4
RT-10	132	66	43	167	52	216	124	64	40	12	46	1-1/4

YUKEN OIL HYDRAULIC EQUIPMENT

B

Pressure Reducing Valves

Max. Pressure 21 MPa

RG-03,06

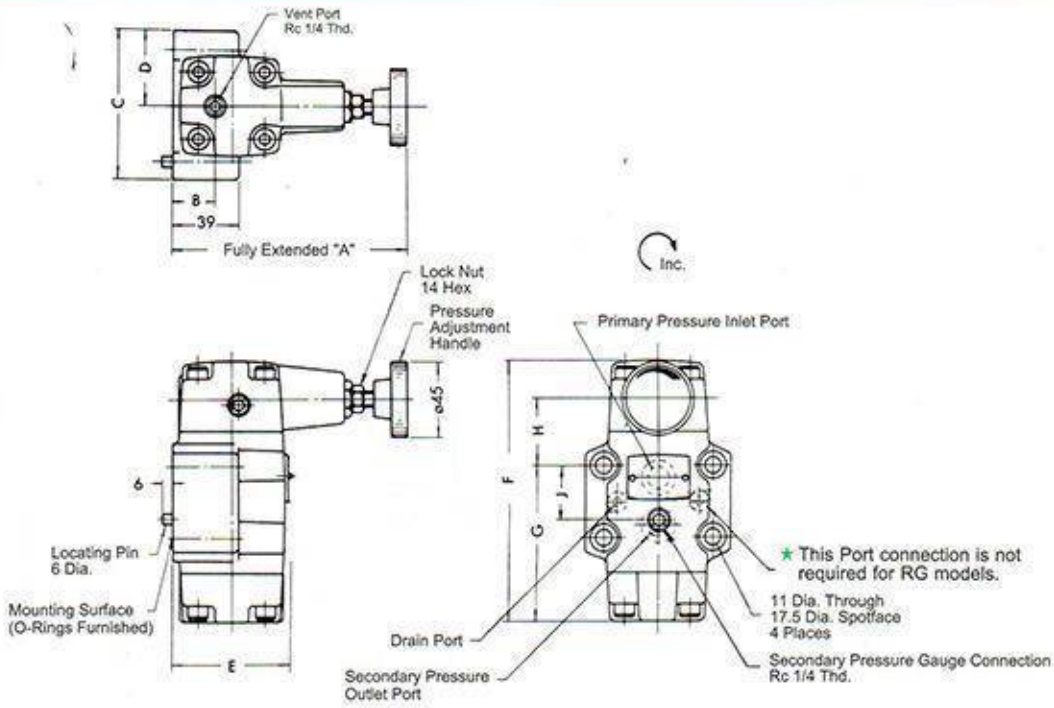

Model No.	A	B	C	D	E	F	G	H	J
RG-03	142	25	89	44.5	67	155.5	92.4	40.6	34.9
RG-06	141	21.5	102	51	79	179	111	40	48

Note: For dimensions of mounting surface, please refer to HGM-03 & 06 type sub-plate (page 66).

RG-10

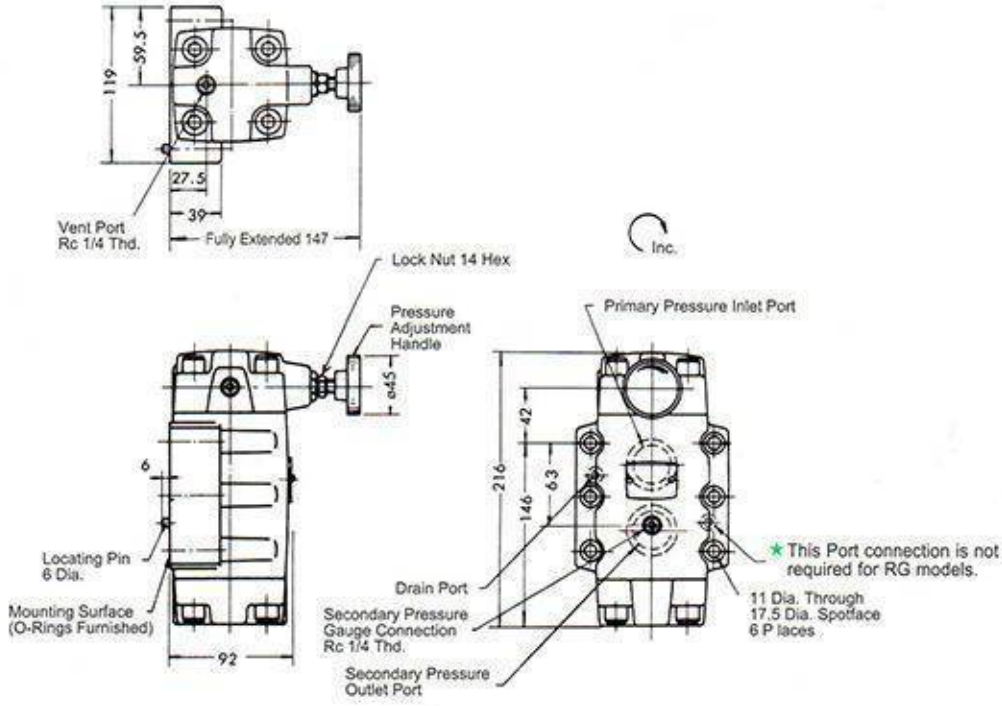

Note: For dimensions of mounting surface, please refer to HGM-10 type sub-plate (page 66).

B

Pressure Reducing & Check Valves Max. Pressure 21 MPa

RCT-03

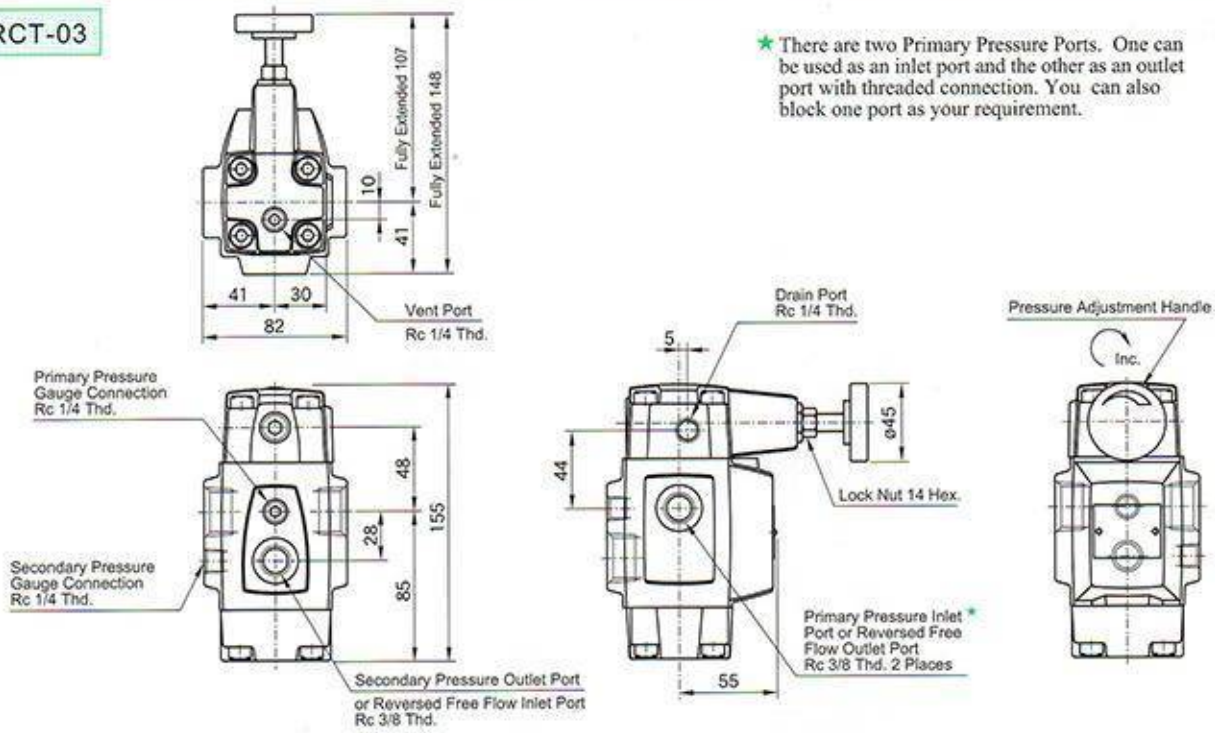

★ There are two Primary Pressure Ports. One can be used as an inlet port and the other as an outlet port with threaded connection. You can also block one port as your requirement.

RCT-06,10

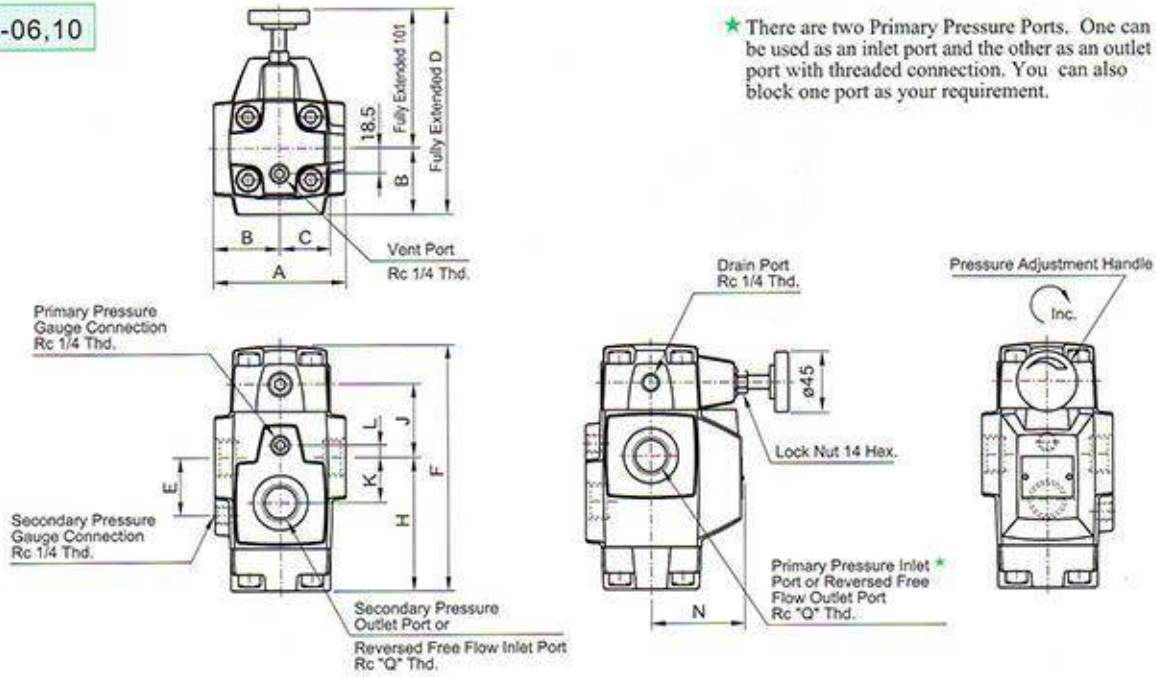

★ There are two Primary Pressure Ports. One can be used as an inlet port and the other as an outlet port with threaded connection. You can also block one port as your requirement.

Model No.	A	B	C	D	E	F	H	J	K	L	N	Q
RCT-06	96	48	36.5	149	42	179	97.5	53.5	33	9	68	3/4
RCT-10	132	66	43	167	52	216	124	64	40	12	86	1-1/4

Pressure Reducing & Check Valves Max. Pressure 21 MPa

RCG-03,06

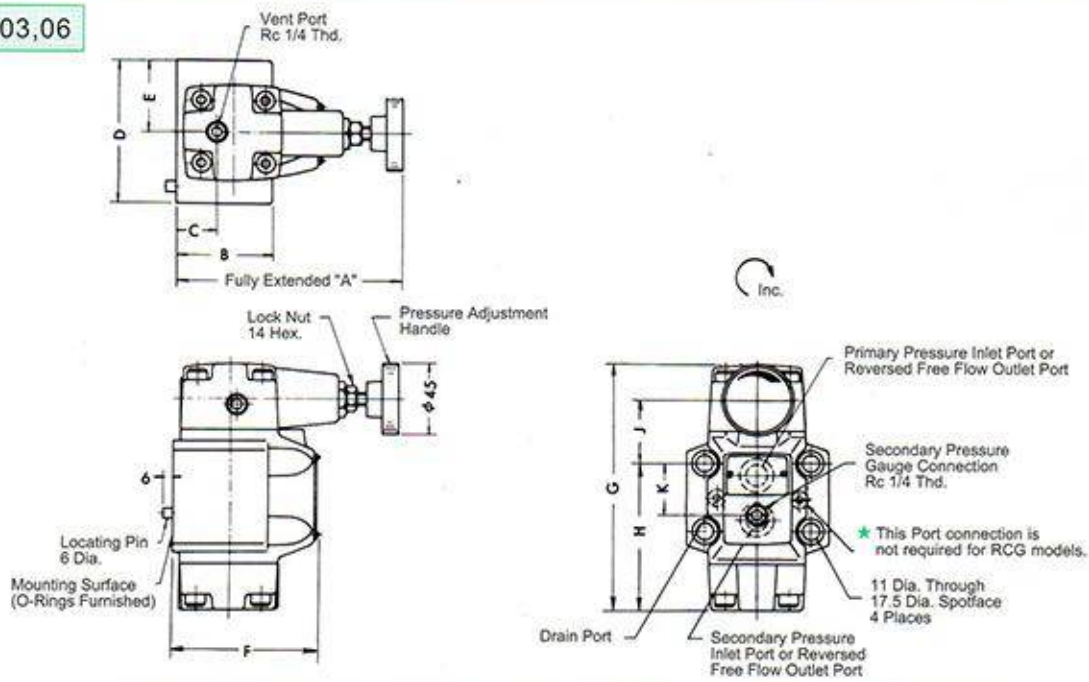

Model No.	A	B	C	D	E	F	G	H	J	K
RCG-03	142	59	25	89	44.5	90	155	92.4	40.6	34.9
RCG-06	141	69	21.5	102	51	108	179	111	40	48

Note: For dimensions of mounting surface, please refer to HGM-03 & 06 type sub-plate (page 66).

RCG-10

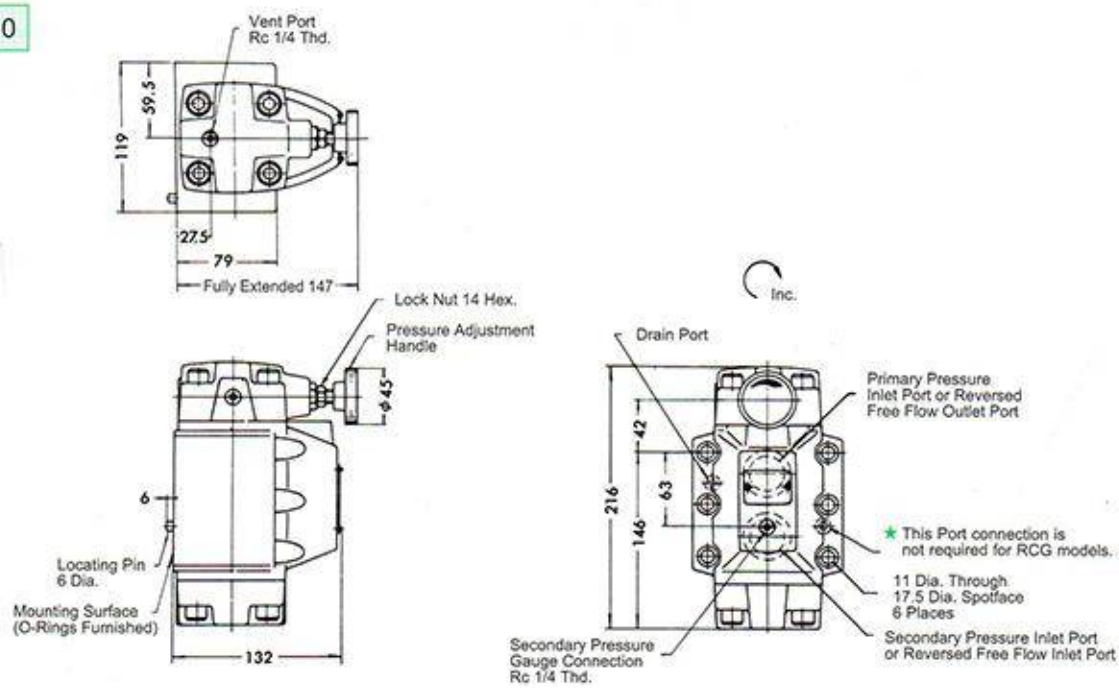

Note: For dimensions of mounting surface, please refer to HGM-10 type sub-plate (page 66).

B

Unloading Relief Valves

Max. Pressure 21 MPa

These valves are used in a accumulator circuit or high-low pump circuit to unload the pump by diverting the pump flow into the reservoir at low pressure.

Specifications

Valve Size	Model No.	Pres. Adj. Range MPa (kgf/cm²)	Max. Flow L/min	Mass kg
3/4	BUCG-06-※-※-※	B:2.5~7.0 (25~70) C:3.5~14.0 (35~140) H:7.0~21.0 (70~210)	125	12

Design Numbers

Design No.	Pilot		Drain	
	Int.	Ext.	Int.	Ext.
30		○		○
3001	○		○	
3002	○			○
3003		○	○	

※The adjustment handle of the internal control pressure is mounted vertically on the surface.

Graphic Symbol

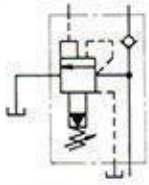

Model Number Designation

BUCG -06-B V-※

- Series Number (Sub-plate mounting)
- Valve Size
- Pressure Adjustment Range MPa (kgf/cm²) B, C, H
- None: Normal
  V: High Venting Pressure Type (Options)*
- Design Number (see the table above)

* Use high-venting pressure type to reduce response time from unloading to onloading.

Mounting bolt(Attachment)

Socket Head Cap Screw	M16 x 55 Lg (2Pcs) M16 x 110 Lg (2Pcs) M16 x 130 Lg (2Pcs)
Tightening Torque N•m	253~310 N•m

BUCG-06-※-30 : External Pilot、External Drain

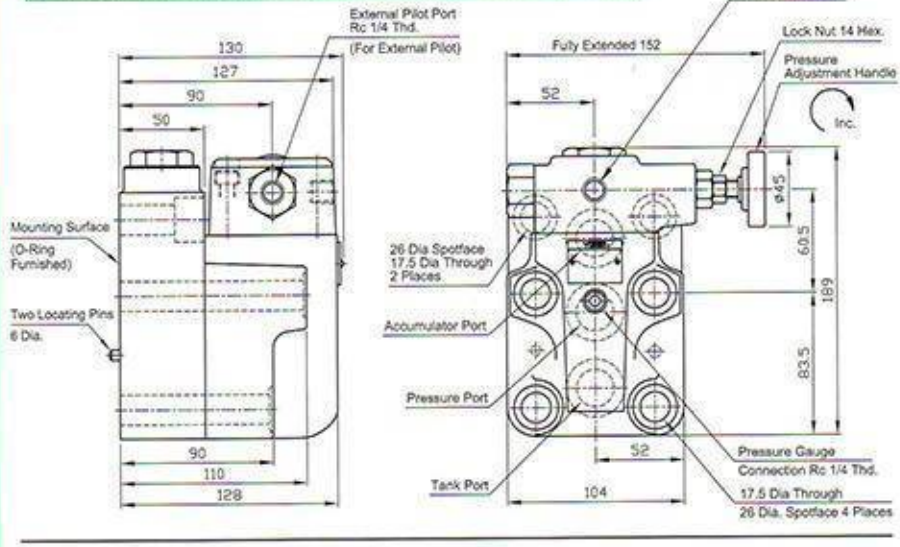

BUCG-06-※-3001 : Internal Pilot, Internal Drain

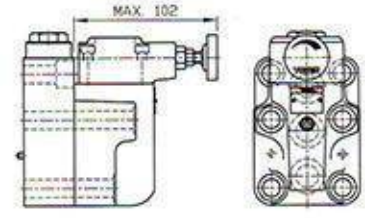

BUCG-06-※-3002 : Internal Pilot, External Drain

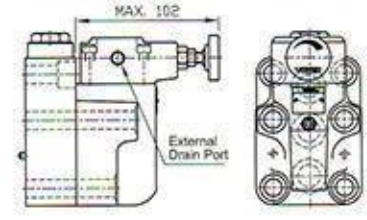

BUCG-06-※-3003 : External Pilot, Internal Drain

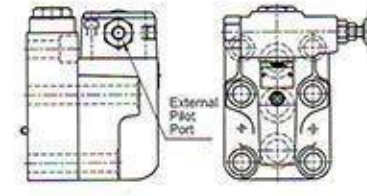

Sub-plate BUCGM-06

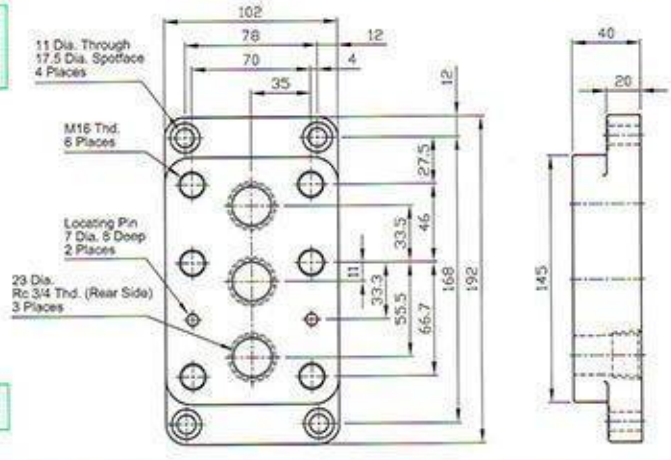

Mass 4.4kg

Balancing Valves

Max. Pressure 14 MPa

This valve is designed for hydraulic balance circuit. It is a combined pressure control valve including reducing and relief function. It is available for the weight division of the main headstock of CNC machine tool; also cut down the space and the weight of the machine.

Specifications

Model Numbers	Max. Operating Pressure MPa (kgf/cm²)	Pres. Adj. Range MPa (kgf/cm²)	Max. Flow L/min	Relieving Flow L/min	Drain Flow L/min	Mass kg
RBG	14 (143)	0.6~13.5 (6.1~138)	50	50	0.6~1	4.2

Graphic Symbols

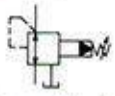

Internal drain

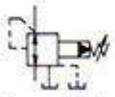

External drain

Model Number Designation

RB	G	-03	-R	-10
Series Number	Type of Mounting	Valve Size	Drain Type	Design Number
RB : Balancing Valves	G: Sub-plate Mounting	03 : Size 10	None: Internal Drain R: External Drain	10

Attentions

- If the internal volume of the remote control piping is too big, it will result in vibration easily. Please make the internal diameter and length of the piping as small as possible.
- The drain piping should not be connected to other piping and should be connected to the tank directly.

Mounting Bolts

Valve Model Numbers	Socket Head Cap Screw (4 pcs)
RBG-03	M10 x 65 Lg 4 pcs Tightening torque: 60~74 N•m

Nominal Override Characteristics

Hydraulic Fluid. Viscosity 35mm²/s (cSt) (164 SSU), Specific Gratity 0.850

····· Relieving
—— Reducing

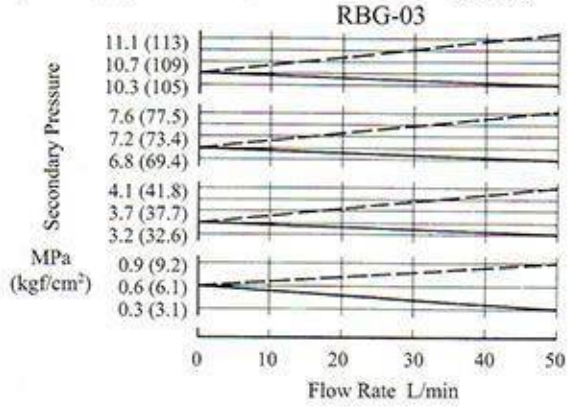

RBG-03

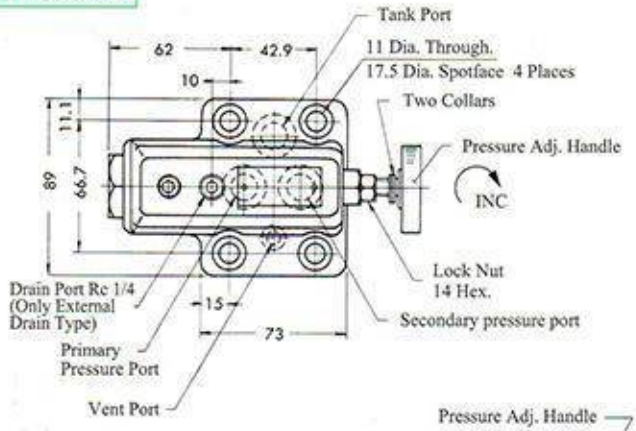

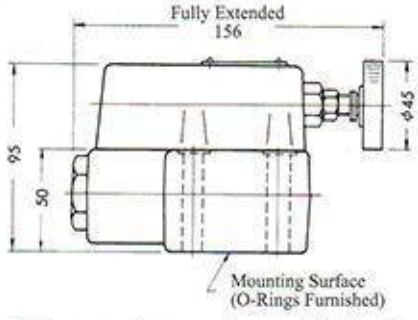

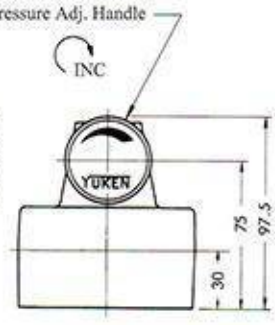

★ Pressure adjustment is controlled by the collar. If it can not meet the working pressure, please take one piece collar out. One piece of collar equals to 10 MPa (102 kgf/cm²).

Sub-plate: RBGM - 03X -10

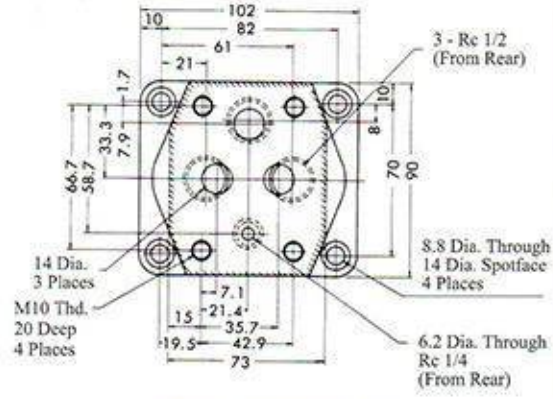

4ManPro

Elements For Manufacturing Processes

YUKEN

YUKEN HYDRAULICS (TW) CO., LTD

C

FLOW CONTROL VALVES

Flow Control Valves
Flow Control & Check Valves

Max. Pressure 21 MPa

C

- These valves are pressure and temperature compensating type valves and maintain a constant flow rate independent of change in system pressure (load) and temperature (viscosity of the fluid). The valves have a digital flow adjusting dial to set the flow rate easily.
- The valves with an integral check valve allow free oil flow from the outlet port to the inlet port.

Specifications

Valve Size	Model No.	Max. Metered Flow Capacity L/min	Min. Metered Flow Capacity L/min	Max. Pressure MPa (kgf/cm²)	Mass kg
1/4	FG-02-30-※-30 FCG-02-30-※-30	30	0.05	21 (210)	3.8
3/8	FG-03-125-※-30 FCG-03-125-※-30	125	0.2		7.9
※ 3/4	FG-06-250-※-30 FCG-06-250-※-30	250	2		23.0
※ 1 1/4	FG-10-500-※-30 FCG-10-500-※-30	500	4		52.0

※Products are made by Yuken Kogyo. If you have any inquiry, please contact our sales engineers.

Graphic Symbol

FG

FCG

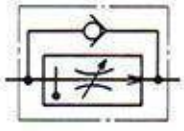

Model Number Designation

FCG -02-30 N-30

- Series Number (Sub-plate mounting)
  - F G : Flow Control Valve
  - F C G : Flow Control & Check Valve
- Valve Size
- Max. Metered Flow Capacity 30, 125, 250, 500
- With Pressure Compensator Stroke Adjustment (omit if not required)
- Design Number

Mounting Bolt (Attachment)

Model NO.	Socket Head Cap Screw	Q'ty	Tightening Torque N•m
F※G-02	M8 x 50 Lg	4	31~38
F※G-03	M10 x 75 Lg	4	60~74
F※G-06	M16 x 130 Lg	4	253~310
F※G-10	M20 x 160 Lg	4	493~603

Sub-plate

Valve Model No.	Sub-plate Model No.	Piping Size Rc	Mass kg
FG FCG -02	FGM-02-20	1/4	2.3
	FGM-02X-20	3/8	
	FGM-02Y-20	1/2	3.1
FG FCG -03	FGM-03X-20	1/2	3.9
	FGM-03Y-20	3/4	5.7
	FGM-03Z-20	1	
FG FCG -06	FGM-06X-20	1	12.5
	FGM-06Y-20	1-1/4	16
	FGM-06Z-20	1-1/2	
FG FCG -10	FGM-10Y-20	1-1/2 or 2 Flange Mounting ※	37

Sub-plates are available. When ordering, please specify sub-plate model no. from the table above. Please refer to page 76 for dimensions.
※When ordering FGM-10Y, please see type F3 series pipe flanges.

YUKEN
OIL HYDRAULIC EQUIPMENT

Flow Control Valves
Flow Control & Check Valves

Max. Pressure 21 MPa

C

FG / FCG -02,03

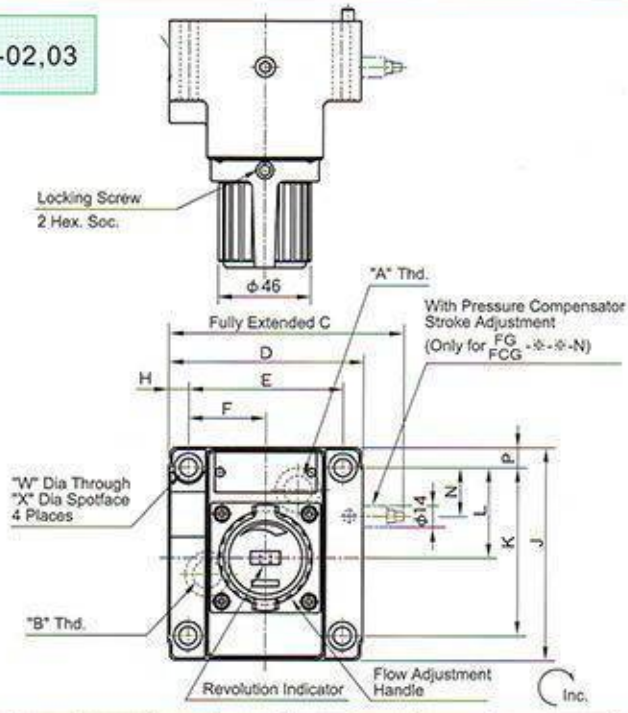

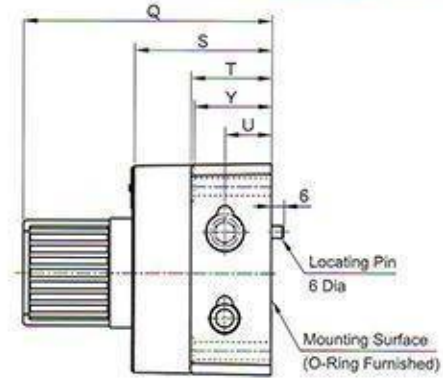

Mounting Surface:
F☼G-02:ISO 6263-AB-06-4-B-87
F☼G-03:ISO 6263-AK-07-2-A-87

Note: For dimensions of mounting surface, please refer to FGM-02 & 03 type sub-plate on next page (page 76)

Model No.	"A" Thd.	"B" Thd.
FG-02,03	Controlled Flow Inlet	Controlled Flow Outlet
FCG-02,03	Controlled Flow Inlet or Reversed Free Flow Outlet Port	Controlled Flow Outlet or Reversed Free Flow Inlet Port

Model No.	C	D	E	F	H	J	K	L	N	P	Q	S	T	U	V	W	X	Y
FG/FCG-02	116	96	76.2	38.1	9.9	104.5	82.6	44.3	24	9.9	123	69	40	23	1	8.8	14	39
FG/FCG-03	145	125	101.6	50.8	11.7	125	101.6	61.8	29.8	11.7	152	98	64	41	2	11	17.5	63

FG / FCG -06,10

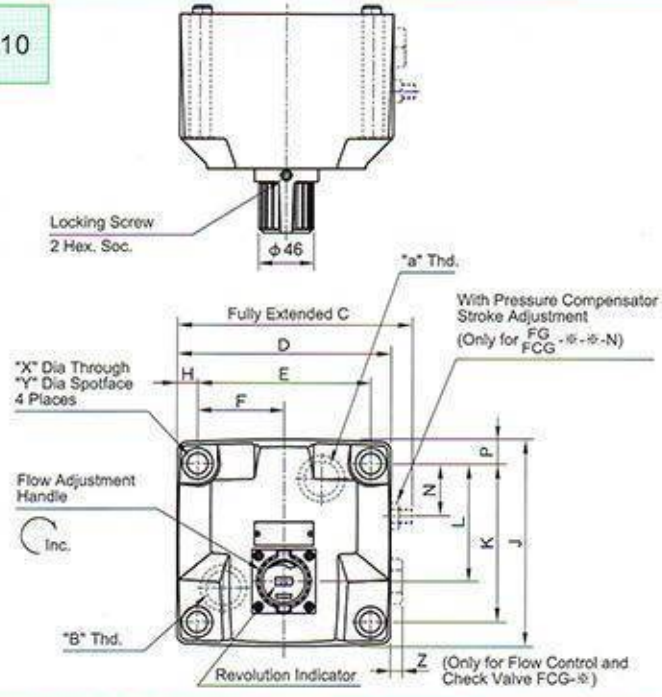

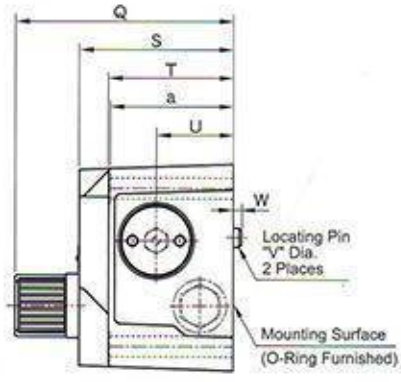

Mounting Surface:
F☼G-06:ISO 6263-AP-08-2-A-87

Note: For dimensions of mounting surface, please refer to FGM-06 & 10 type sub-plate on next page (page 76)

Model No.	"A" Thd.	"B" Thd.
FG-06,10	Controlled Flow Inlet	Controlled Flow Outlet
FCG-06,10	Controlled Flow Inlet or Reversed Free Flow Outlet Port	Controlled Flow Outlet or Reversed Free Flow Inlet Port

Model No.	C	D	E	F	H	J	K	L	N	P	Q	S	T	U	V	W	X	Y	Z	a
FG/FCG-06	198	180	146.1	73	17	174	133.4	99	44	20.3	184	130	105	65	16	7	17.5	26	9	103
FG/FCG-10	267	244	196.9	98.5	23.5	228	177.8	144.5	61	25	214	160	137	85	18	10	21.5	32	7.5	133

Flow Control Valves
Flow Control & Check Valves

Max. Pressure 21 MPa

C

Sub-plate FGM-02, 02X, 02Y-20

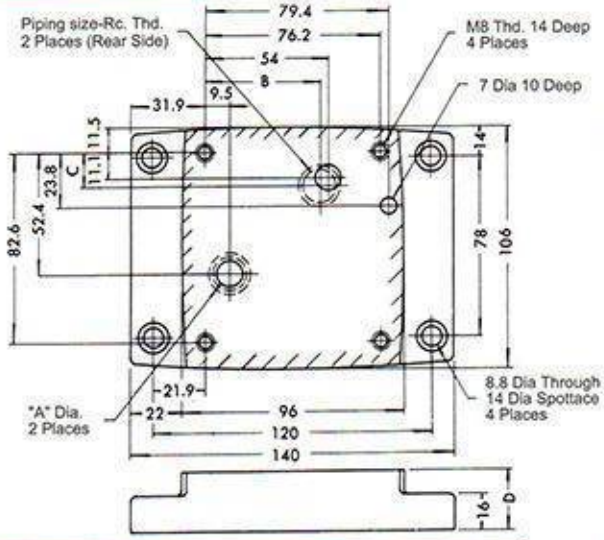

Model No.	Piping Size Rc	A	B	C	D
FGM-02-20	1/4	11	54	11.1	25
FGM-02X-20	3/8	14	54	11.1	25
FGM-02Y-20	1/2	14	51	14	35

FGM-03X, 03Y, 03Z-20

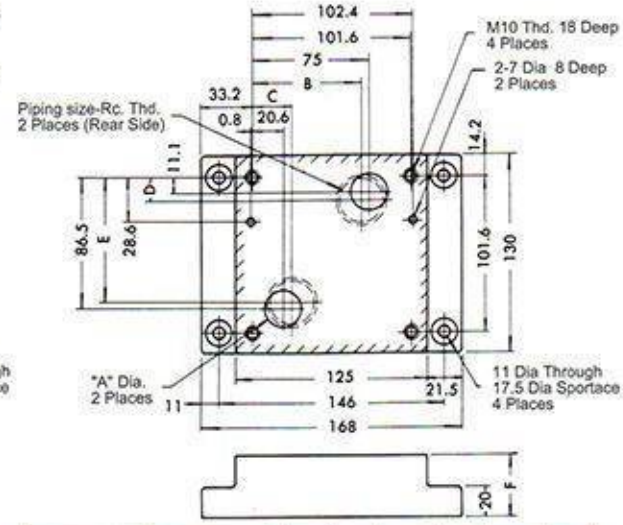

Model No.	Piping Size Rc	A	B	C	D	E	F
FGM-03X-20	1/2	17.5	75	20.6	11.1	86.5	25
FGM-03Y-20	3/4	23	70	25.6	16.1	81.5	40
FGM-03Z-20	1	23	70	25.6	16.1	81.5	40

FGM-06X, 06Y, 06Z-20

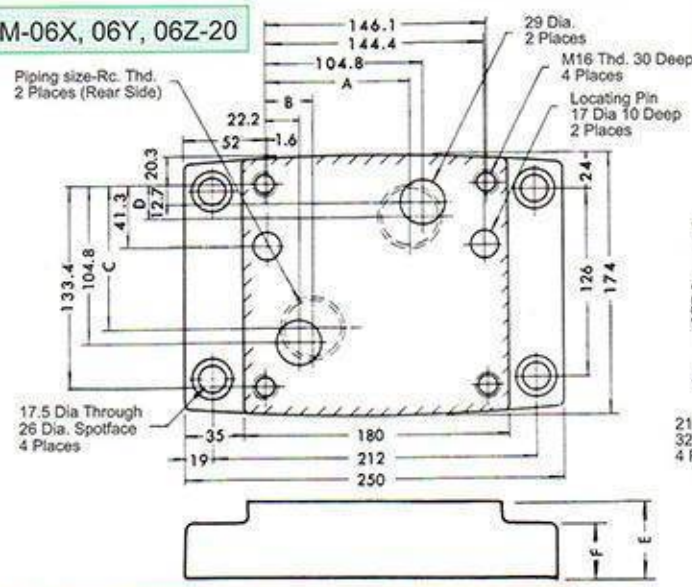

Model No.	Piping Size Rc	A	B	C	D	E	F
FGM-06X-20	1	104.8	22.2	104.8	18	45	35
FGM-06Y-20	1-1/4	99	34	99	23	60	40
FGM-06Z-20	1-1/2	99	34	99	23	60	40

FGM-10Y-20

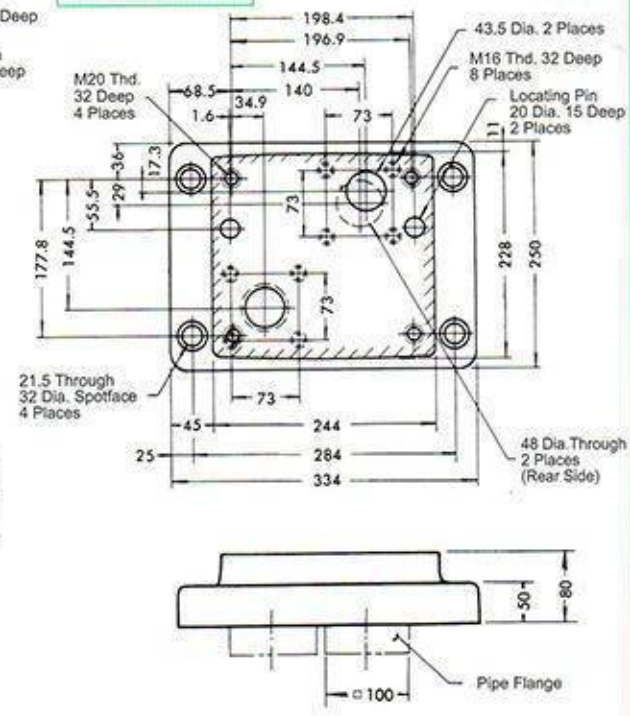

YUKEN
OIL HYDRAULIC EQUIPMENT

Restrictors
One Way Restrictors

Max. Pressure 21 MPa

C

SRG Type

Graphic Symbol

SRG

SRCG Type

Graphic Symbol

SRC※

- These valves are used to regulate an actuator speed in a circuit where line pressure is almost steady and small fluctuation of oil flow due to pressure change is permitted.
- The valves with an integral check valve allow free oil flow from the outlet to the inlet port.

Specifications

Valve Size	Model No.	Rated Flow L/min	Mass kg
3/8	SRG-03-※-41	30	1.2
	SRCT-03-※-41		1.2
	SRCG-03-※-41		2.1
3/4	SRG-06-※-41	80	2.4
	SRCT-06-※-41		3.2
	SRCG-06-※-41		4.0
1 1/4	SRCT-10-※-41	200	7.1
	SRCG-10-※-41		8.1

※ SRT-03/06/10, SRG-10 stop production.

Model Number Designation

SR G-03-※-41

Series Number
S R : Restrictor
S R C : One Way Restrictor

Type of Connection
T : Threaded Connection (Only for SRCT)
G : Sub-plate Mounting

Valve Size
03, 06, 10

Pressure Range
H : Pressure Range 5~21 MPa
L : Pressure Range 0.5~5 MPa

Design Number

Sub-plate

Valve Model No.	Sub-plate Model No.	Piping Size Rc	Mass kg
SRG-03 SRCG-03	SRGM-03-40	3/8	1.2
SRG-06 SRCG-06	SRGM-06-40	3/4	2.5
SRCG-10	SRGM-10-40	1 1/4	4.2

Sub-plates are available. When ordering, please specify sub-plate model no. from the table above.

Mounting Bolts (Attachment)

Model No.	Socket Head Cap Screw	Q'ty	Tightening Torque N•m
SRG-03	M8 x 35 Lg	4	31~38
SRCG-03	M8 x 60 Lg	4	
SRG-06	M10 x 45 Lg	4	60~74
SRCG-06	M10 x 70 Lg	4	
SRCG-10	M12 x 100 Lg	4	104~127

SRG-03, 06

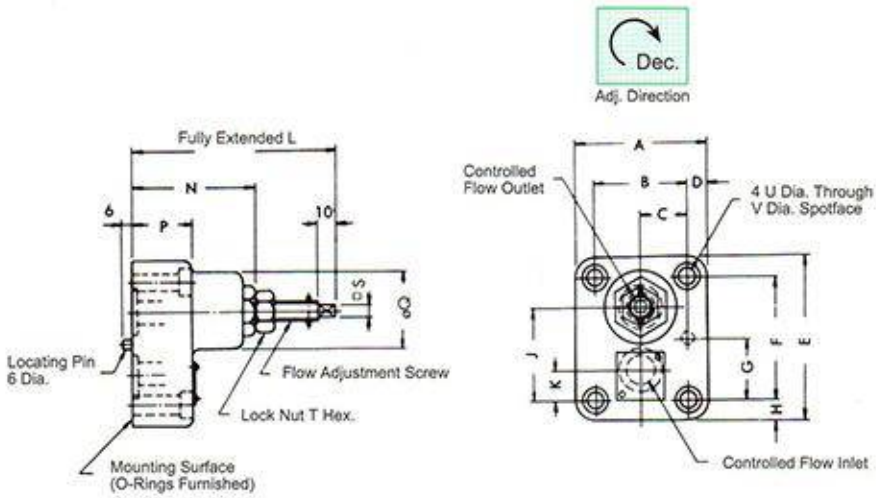

Model No.	A	B	C	D	E	F	G	H	J	K	L	N	P	Q	S	T	U	V	X
SRG-03	60	40	20	10	80	60	30	10	45	15	100	61	30	40	8	19	8.8	14	8.6
SRG-06	80	58	29	11	92	70	35	11	54	16	117.5	73	42	40	8	19	11	17.5	10.8

Note: For dimensions of mounting surface, please refer to SRGM type sub-plate (page 79).

Restrictors
One Way Restrictors

Max. Pressure 21 MPa

C

SRCT-03, 06, 10

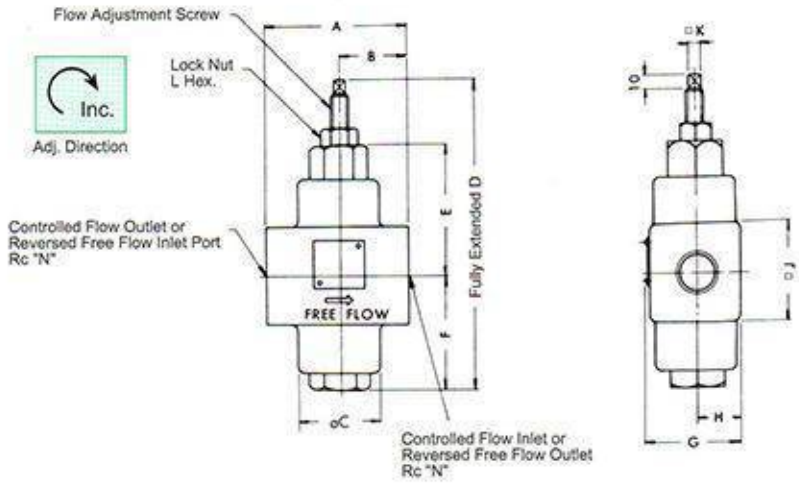

Model No.	A	B	C	D	E	F	G	H	J	K	L	N
SRCT-03	70	35	40	151	60	58	42	20	40	8	19	3/8
SRCT-06	100	50	56	186	83	65	62	30	60	8	19	3/4
SRCT-10	130	65	70	228	106	77	82	40	80	10	22	1 1/4

Note: For dimensions of mounting surface, please refer to SRGM type sub-plate (page 79).

SRCG-03, 06, 10

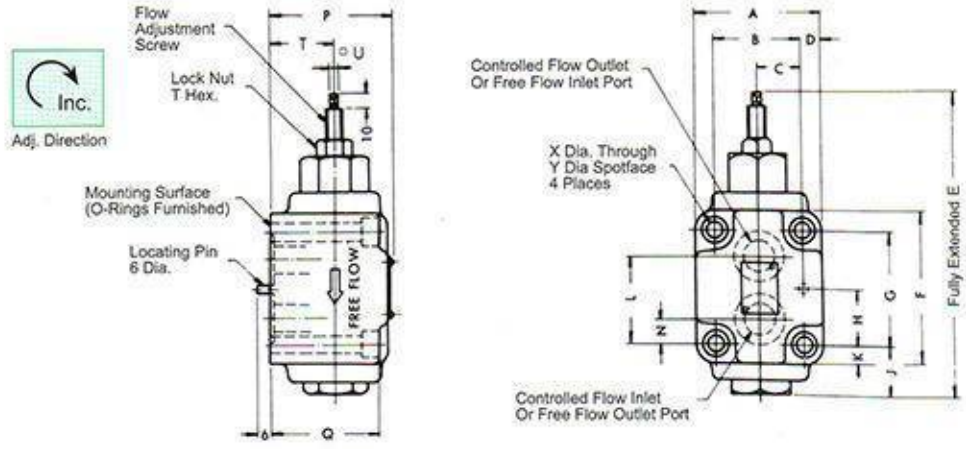

Model No.	A	B	C	D	E	F	G	H	J	K	L	N	P	Q	T	U	V	X	Y	Z
SRCG-03	60	40	20	10	151	80	60	30	28	10	45	15	62	55	35	8	19	8.8	14	8.6
SRCG-06	80	58	29	11	186	92	70	35	30	11	54	16	74	68	40	8	19	11	17.5	10.8
SRCG-10	100	72	36	14	228	120	92	46	31	14	71	21	97	82	50	10	22	13.5	21	1

Note: For dimensions of mounting surface, please refer to SRGM type sub-plate (page 79).

Restrictors
One Way Restrictors

Max. Pressure 21 MPa

C

SUB-PLATE

SRGM-03-40

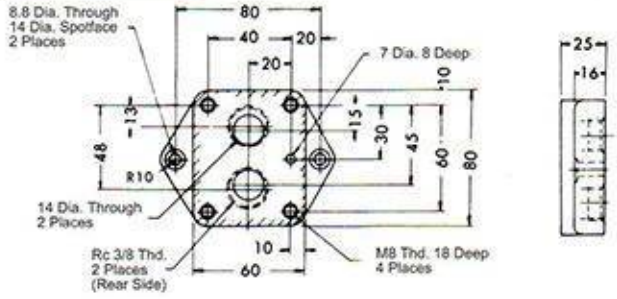

SRGM-06-40

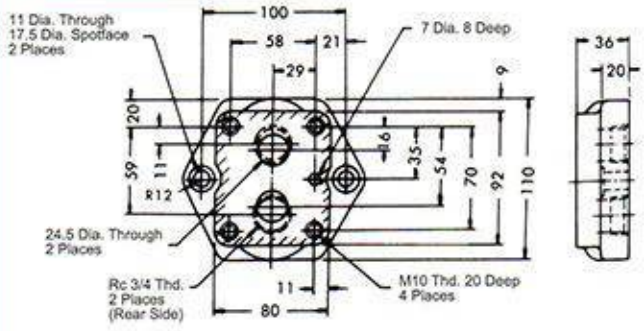

SRGM-10-40

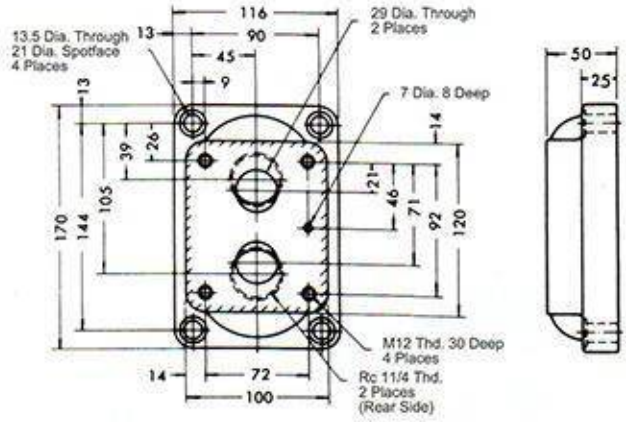

Throttle Modules
Throttle & Check Modules

Max. Pressure 25 MPa

C

TC1G-01

TC2G

These valves, when used in combination with a solenoid controlled pilot operated directional valve, regulate the speed of an actuator or control the change-over speed of the main spool by throttling the pressure port or the cylinder port.

Specifications

Valve Size	Model No.	Rated Flow L/min	Mass kg
1/8	TC1G-01-40	30	0.6
	TC2G-01-40		0.65

※To count extra 25mm of screw length when mounting Solenoid Operated Directional Valves.

Model Number Designation

TC1G-01-40

- Series Number (Sub-plate mounting)
  - TC1G:P Port Meter-in (C1)
  - TC2G:AB Port Meter-out(C2)
- Valve Size
- Design Number

Graphic Symbol

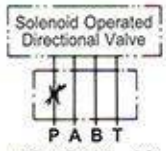

TC1G-01-40

TC2G-01-40

TC1G-01-40

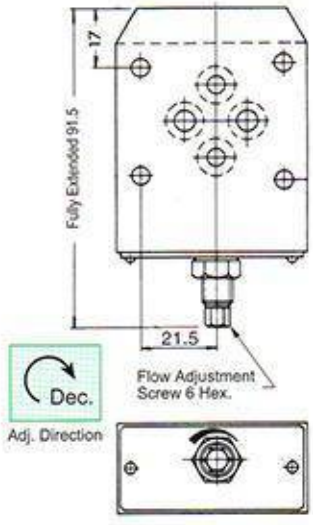

For other dimensions, please refer to TC2G-01 type

TC2G-01-40

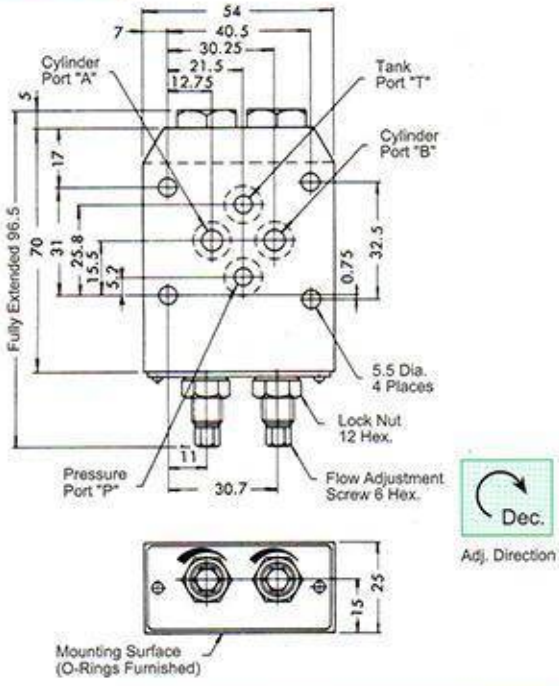

YUKEN
OIL HYDRAULIC EQUIPMENT

Needle Valves

Max. Pressure 35 MPa

C

These valves can be used as a stop valve or a throttle valve to control the flow in small capacity pipelines, or can be used as a shut-off valve in pressure gauge lines.

Specifications

Valve Size	Model No.	Max. Flow L/min	Mass kg
1/4	GCT-02-31 GCTR-02-31	5	0.34

Model Number Designation

GCT-02-31

- Series Number (Threaded connection)
  GCT : In-line type
  GCTR : 90° Type
- Valve Size
- Design Number

Graphic Symbol

Flow vs. Adjustment Revolutions

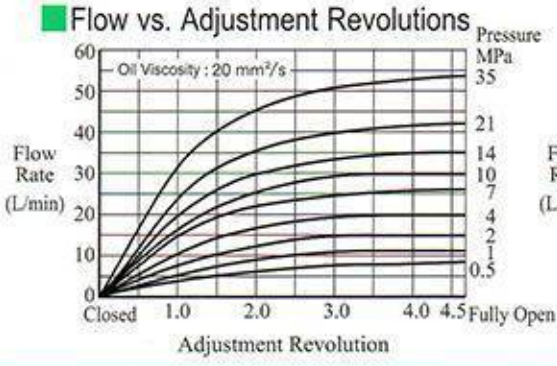

Pressure Drop at Full Open

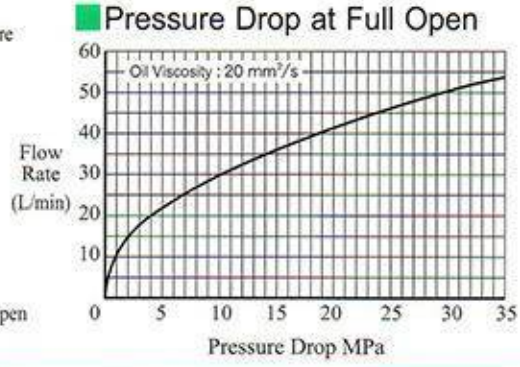

GCT-02

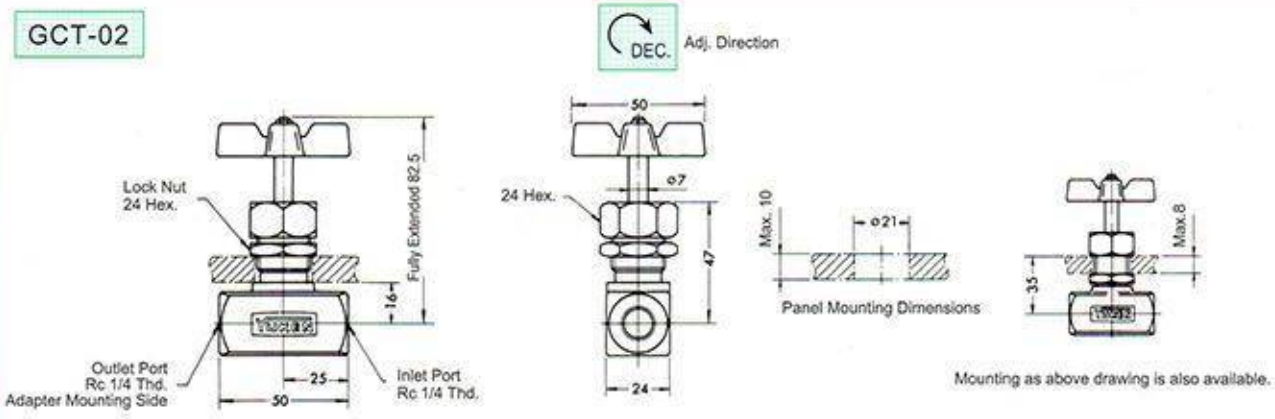

GCTR-02

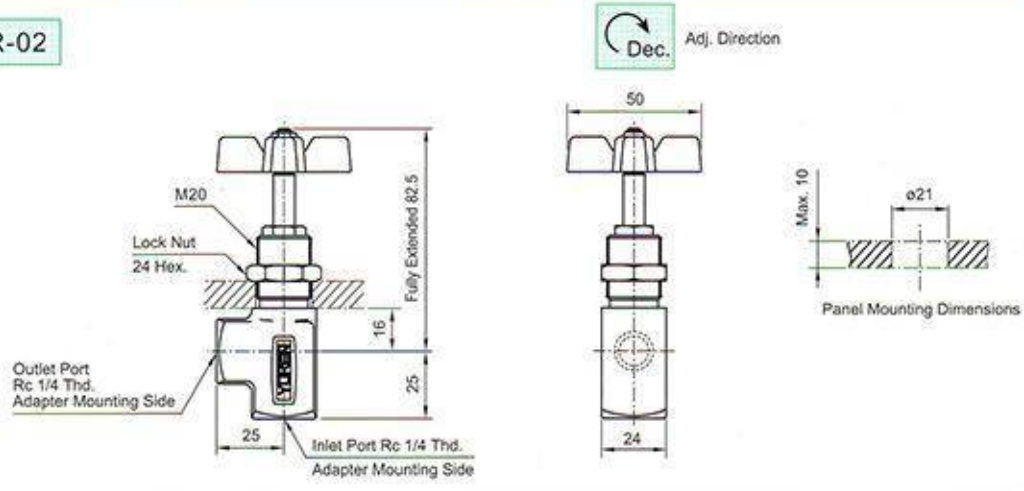

4ManPro

Elements For Manufacturing Processes

YUKEN

YUKEN HYDRAULICS (TW) CO., LTD

D

DIRECTIONAL CONTROL VALVES

Directional Control Valves

Directional Control Valves are designed to start, stop, control direction, accelerate and decelerate cylinders and hydraulic motors. Directional valves are classified into following five types depending on the operational method: Solenoid Operated Directional Valves, Solenoid Controlled Pilot Operated Directional Valves, Pilot Operated Directional Valves, Manually Operated Directional Valves, and Mechanically Operated Directional Valves.

Types of Spool

Spool No.	Schematic Drawing (Center position)	Functions	Graphic Symbols			
			Three Positions	Two Positions		
			3※※	2B※/2D※/2N※*	2B※A	2B※B
2		Closed Center all Ports	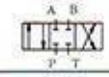	★ 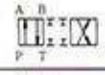		
3		Open Center all Ports	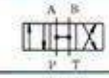	★ 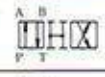		
4	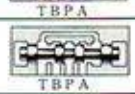	Open Center A. B. & T	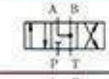	★		
40		Open Center A. B. & T Restricted Flow	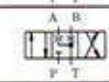	★		
5	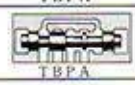	Open Center P. A. & T	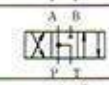			
60	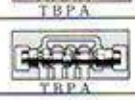	Open Center P & T Open Crossover	★		★	★
7	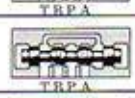	Open Center all Ports Restricted Flow		★ 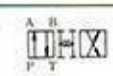		
8	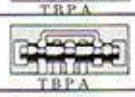	Two Way		★ 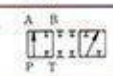		
9	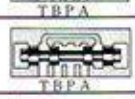	Open Center P. A. & B				
10	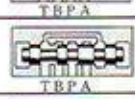	Open Center B. & T				
11		Open Center P. & A				
12		Open Center A. & T				

★These 2※※ type valves have no center position.

Valve Type Designation

3 C 2

- 3 — Number of Valve Position
  - 3: Three Position
  - 2: Two Position
- C — Spool-Spring Arrangement
  - B: Spring Offset
  - C: Spring Centered
  - N: No Spring
  - D: No Spring Detented
- 2 — Spool Type (See above)

Solenoid Operated Directional Valves
Solenoid Controlled Pilot Operated Directional Valves

These valves have the following features and satisfy the needs of users in the various industries.

DC Solenoid (K series Solenoid Operated Directional Valve)

★These valves differ from conventional DC solenoid operated directional valves and have the following characteristics.★

1. The surge voltage is very low and will not jam the other electronic systems; therefore, it will not make wrong action to the computers.
2. The spark between the relay contacts has been eliminated and therefore the valve can be operated by miniature relays.
3. Time lag on de-energization is reduced approximately 50%.

R type solenoid

Remarkably high reliability and long life and other advantages induding quiet valve operation. No over-heating of coil due to the spool sticking and protection against transient voltage peaks are assured.

D

Simple and Rational Structure

- The terminal-box type is available for electric connection.
- The terminal-box type is equipped with indicator lights as a standard.
- A drip-proof structure is employed to protect the electric devices.
- Simple dismantling and assembling makes maintenance easy.

Solenoid development is based on learned experiences

- AC Solenoid
  Common two terminals for both 50Hz and 60 Hz For the AC solenoid, rewiring is not required when applied frequency is changed.
- The DC solenoid is the famous "K" series Advantages of DC control can be fully displayed.
- AC-DC convertible solenoid
  This solenoid has high reliability and durability, with no coil burnout.
- Various solenoids available for different voltage.
- Winding and insulation of the solenoids are class H of IEC (Classification of Materials for insulation of Electrical Machinery and Apparatus)

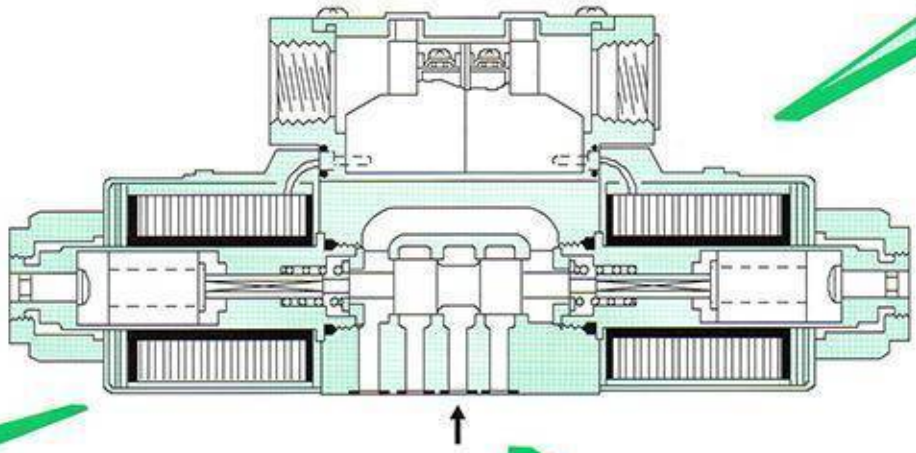

Design Reaching the Ultimate of Wet-Type Solenoid

- Stable operation
  Stable operation can be obtained, since these solenoids are resistant to contaminants, with high absorbing power and a strong spring returned force.
- Mould-Type coil
  With the mould-type coil, it is excellent in heat radiation so that temperature rise on the solenoid surface can be reduced.
- Lower power consumption
  in spite of high absorbing power, power consumption is low.

High Pressure and High Flow Rate Realized by High Technology

High pressure, high flow rate, and small pressure drop are produced by high-power wet type solenoids that are newly developed and the rational passage design of the valve.

Solenoid Operated Directional Valves Max. Pressure 7 MPa

D

The valve is specially designed for power saving, high efficiency and space saving. Its power consumption is less than DSG-01 series and its mounting dimensions is as same as DSG-01, however its length with double solenoid (DC) is 18 mm less than DSG-01 series. It is available for shoe machine, CNC machine and low-pressure automatic equipment.

Specifications

Valve Size	Model No.	Max. flow L/min	Max. Operating pressure MPa (kgf/cm²)	Max. T-Line Back Pressure MPa (kgf/cm²)	Mass kg
1/8	DSGL-01-2B2-※-60	40	7 (70)	7 (70)	1.5
	★ DSGL-01-2D2-※-60				2
	DSGL-01-3C※-※-60				2

★The max. flow of 2D2 is 30 L/min.

Model Number Designation

DSGL-01-3C2-A110-N1-60-50Hz

- Series Number (Sub-plate Mounting)
- Valve Size : 01
- Valve Type (Please refer to above table)
- Coil Type A110, A220, D12, D24
- Electrical Conduit Connection
  None: Normal (Terminal Box Type is only for D12, D24)
  N: Plug-In Connector Type Without Indicator Light
  N1: Plug-In Connector Type With Indicator Light
- Design Number
- None: 60Hz or DC
  50 Hz : 50Hz only
  ★1: Please make a note of the available range of different frequency. If you want to choose the coil in 50HZ area, please add 50HZ after the design no.

Valve Types

Valve Type	3C2	3C4	3C10	3C12
Graphic Symbol				
Valve Type	**2B2**	**2B3**	**2D2**	**3C9**
Graphic Symbol				

- The valve other than above types are available, please contact ous sales engineers for your requirement.
- These 2B2, 2B3 & 2D2 have no center position.

Mounting Bolts (Attachment)

Socket Head Cap Screw	Tightening Torque
M5 x 45 Lg 4 Pcs	5~7 N·m

Sub-plate

Valve Model No.	Sub-plate Model No	Piping Size Rc	Mass kg
DSGL-01	DSGM-01-30	1/8	0.8
	DSGM-01X-30	1/4	
	DSGM-01Y-30	3/8	

- Sub-plates are available. When ordering, please specify sub-plate model from the table above.
- Please refer to page 88 for dimension details.

Solenoid Ratings

Electric Source	Coil Type	Serviceable Range		Current & Power at Rated Voltage		
		Frequency (Hz)	Voltage (V)	Inrush (A)	Holding (A)	Power (W)
AC	A110/50Hz	50	100-120	1.56	0.42	23
	A110/60Hz	60	100-120	1.72	0.37	18
	A220/50Hz	50	200-240	0.69	0.21	23
	A220/60Hz	60	200-240	0.82	0.18	18
DC	D12	-	10.8-13.2	-	1.75	20
	D24	-	21.6-26.4	-	0.85	20

Solenoid Operated Directional Valves Max. Pressure 7 MPa

Mounting surface: ISO 4401-AB-03-4-A

Model with AC solenoids : DSGL-01-※※※-A※

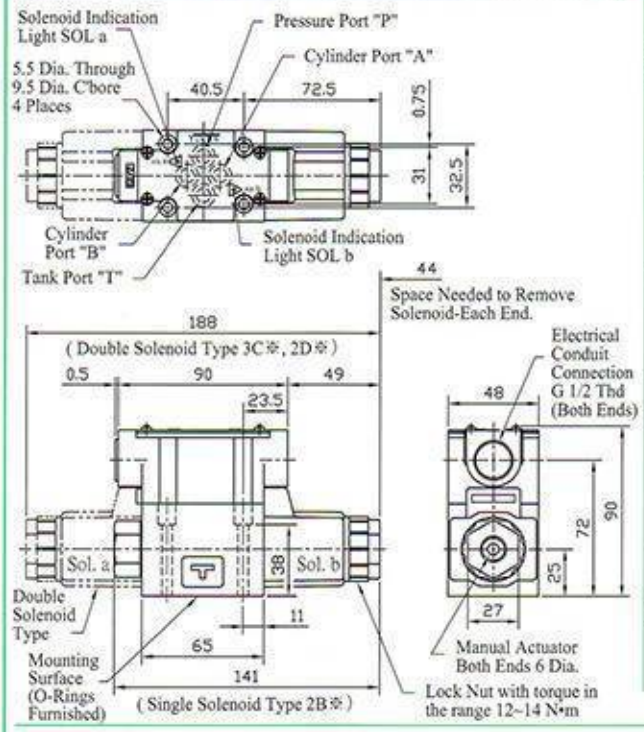

Model with AC solenoids : DSGL-01-※※※-A※-N/N1

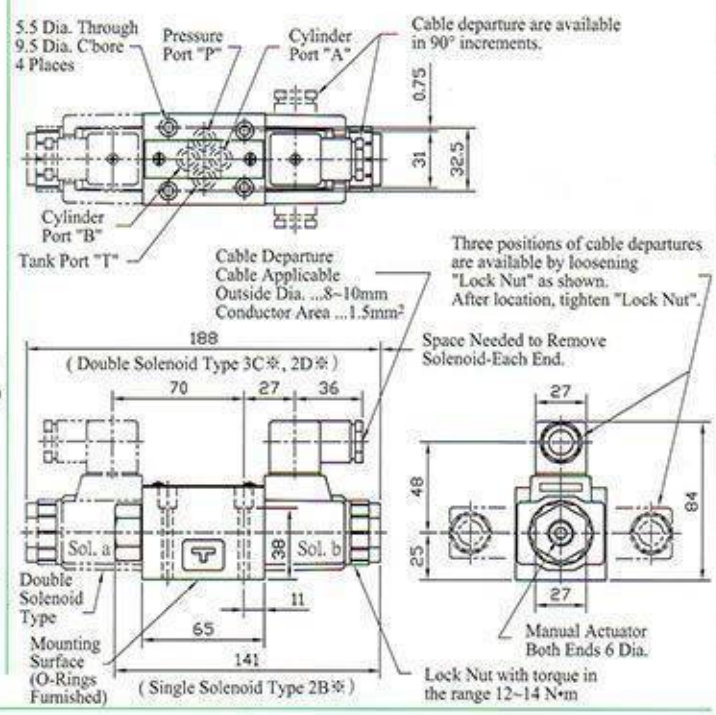

Mounting surface: ISO 4401-AB-03-4-A

Model with DC solenoids : DSGL-01-※※※-D※

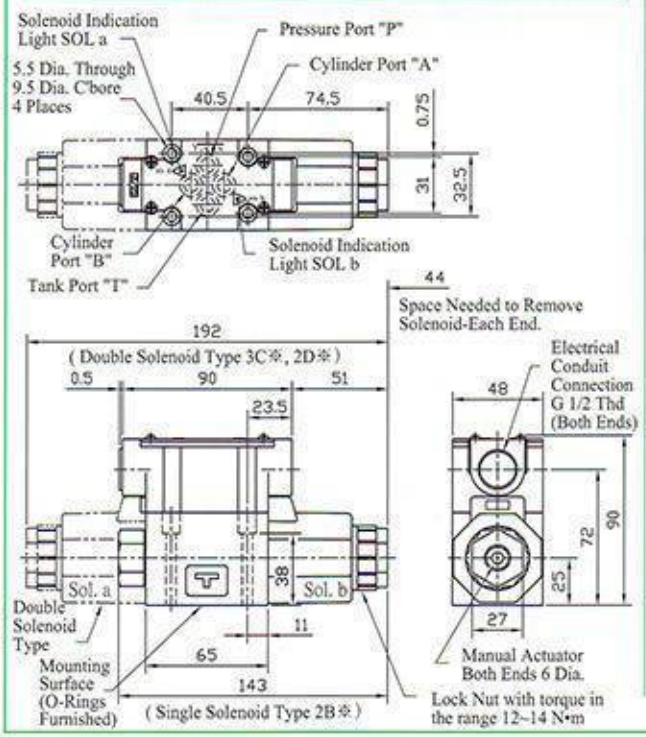

Model with DC solenoids : DSGL-01-※※※-D※-N/N1

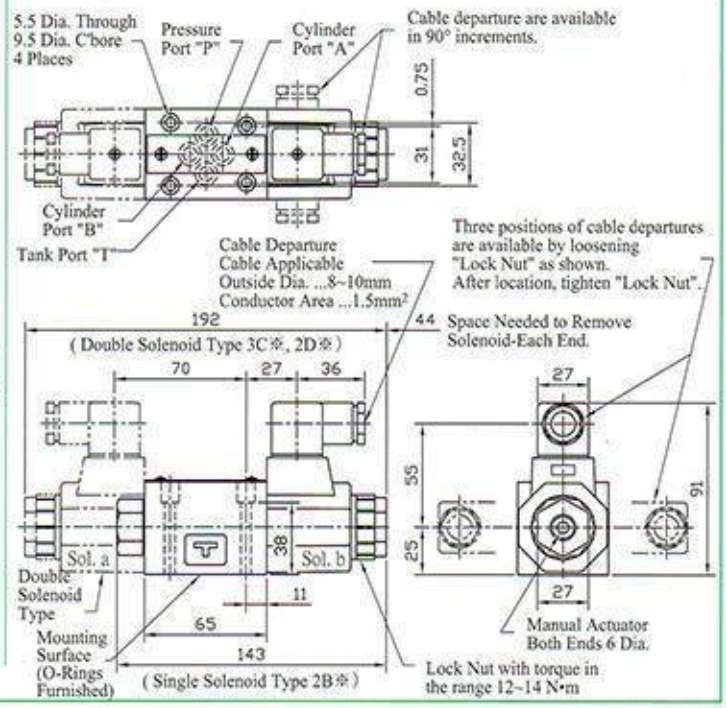

Solenoid Operated Directional Valves Max. Pressure 31.5 MPa

D

DSG-01 Series

- These valves are adapted with strong wet-type solenoid and circuit designs to accomplish high pressure, large volume flow and lower pressure drop.
- The optimum valve for any system can be utilized since many spool types and various solenoids are all available, along with other optional function.

Specifications

Valve Size	Model Number	Max. Flow L/min	Max. Pressure MPa (kgf/cm²)	Max. T-Line Back Pressure MPa (kgf/cm²)	Max. Changeover Frequency Cycle/min	Mass kg
1/8	DSG-01-3C※-※-50	63	(31.5 (315) Spool Type 60 only 250)	16 (160)	(300 R Type only 120)	2.2
	DSG-01-2D2-※-50					2.2
	DSG-01-2B※-※-50					1.6

Model Number Designation

DSG-01-3C2-A110-N-50-50Hz

- Series Number (Sub-plate mounting)
- Valve Size: 01
- Valve Type (See table below)
- Coil Type A110, A220, ★1 D12, D24, R110, R220
- Electrical Conduit Connection
  None:Standard (Terminal Box Type)
  N:Plug-In Connector Type Without Indicator Light
  N1:Plug-In Connector Type With Indicator Light
- Design Number
- None: 60Hz or DC or R※
  50 Hz : 50Hz only

★Please note voltage applicable range for different frequency. In 50 Hz area, if you want to use same voltage as the coil type, please add (50Hz) after the design number.

★1.DC with Rectifier.
DC Terminal Box Type: Rectifier is put in the terminal box.
DC Plug-In Connector Type: Rectifier is put in the connector.

Valve Type

Valve Type	3C2	3C3	3C4	3C40	3C60	3C12
Graphic Symbol			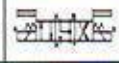			
Valve Type	**2B2**	**2B3**	**2B8**	**2B2B**	**2D2**	**3C9**
Graphic Symbol		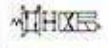				

- Valves, other than the types above are available, please contact our sales engineer for your requirement.
- 2B2,2B3,2B8 & 2D2 type valves have no center position.

Mounting Bolts (Attachment)

Socket Head Cap Screw	Tightening Torque
M5 x 45Lg 4pcs	5 ~ 7 N•m (Applicable to working pressure higher than 25 MPa 6 ~ 7 N•m)

Sub-plate

Valve Model No.	Sub-plate Model No.	Piping Size Rc	Mass kg
DSG-01	DSGM-01-30	1/8	0.8
	DSGM-01X-30	1/4	
	DSGM-01Y-30	3/8	

* Sub-plates are available. When ordering, please specify sub-plate model no. from the table above.
* Please refer to page 88 for dimension details.

Solenoid Rating

Electric Source	Coil Type	Serviceable Voltage Range		Current & Power at Rated Voltage		
		Frequency (Hz)	Voltage (V)	Inrush (A)	Holding (A)	Power (W)
AC	A110/50Hz	50	100-120	1.68	0.35	18
	A110/60Hz	60	100-120	1.79	0.35	20
	A220/50Hz	50	200-240	0.89	0.20	19
	A220/60Hz	60	200-240	0.90	0.18	21
DC	D12	-	10.8-13.2	-	2.00	24
	D24	-	21.6-26.4	-	1.10	26
AC→DC	R110	50/60	100-120	-	0.33	29
	R220	50/60	200-240	-	0.15	29

There are other coil types available, please contact our sales engineers for your requirement.

Solenoid Operated Directional Valves Max. Pressure 31.5 MPa

Mounting Surface : ISO 4401-AB-03-4-A

Model with AC solenoids : DSG-01-※※※-A※

- Spring Centered
- No Spring Detented

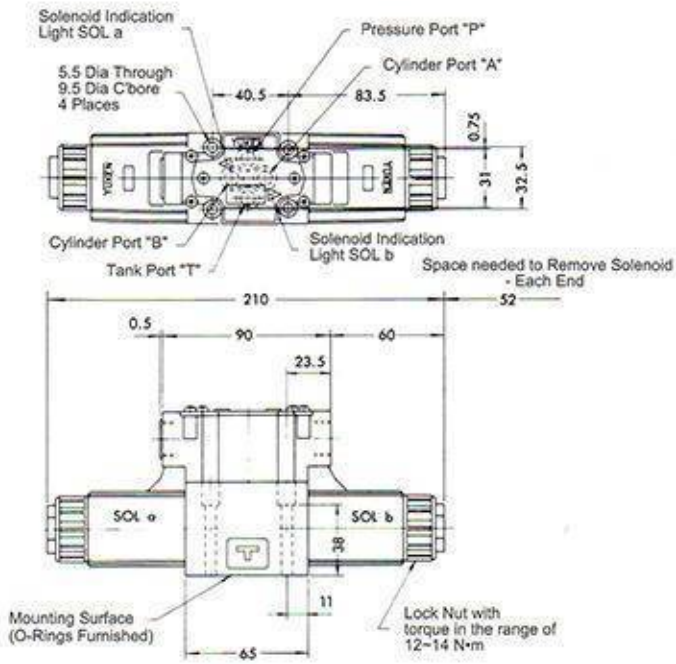

- Spring Offset

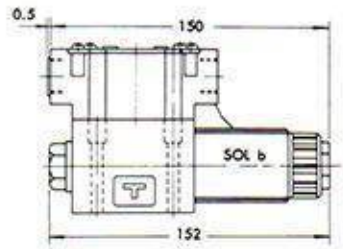

For other dimensions, please refer to left diagram.
Alternative models using solenoid "a" are also available.

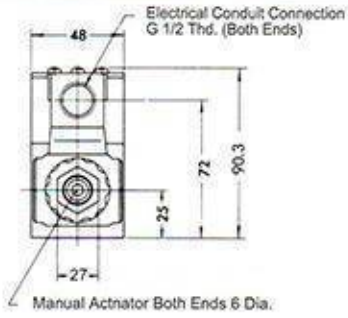

Mounting Surface : ISO 4401-AB-03-4-A

Model with DC solenoids : DSG-01-※※※-D※
Model with R solenoids : DSG-01-※※※-R※

- Spring Centered
- No Spring Detented
- Spring Offset

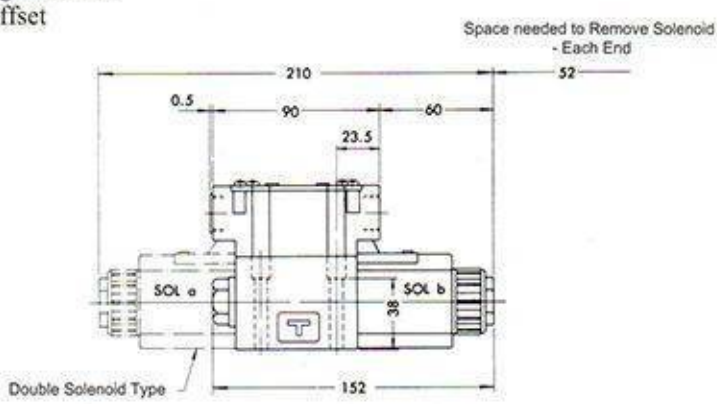

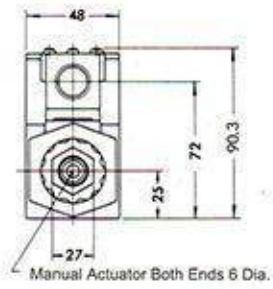

- For other dimensions, please refer to above model with AC solenoid.

Solenoid Operated Directional Valves Max. Pressure 31.5 MPa

D

DIN Connector type, DIN Connector Type with Indicator Light

Model with AC Solenoids : DSG-01-※※※-A※-N/N1

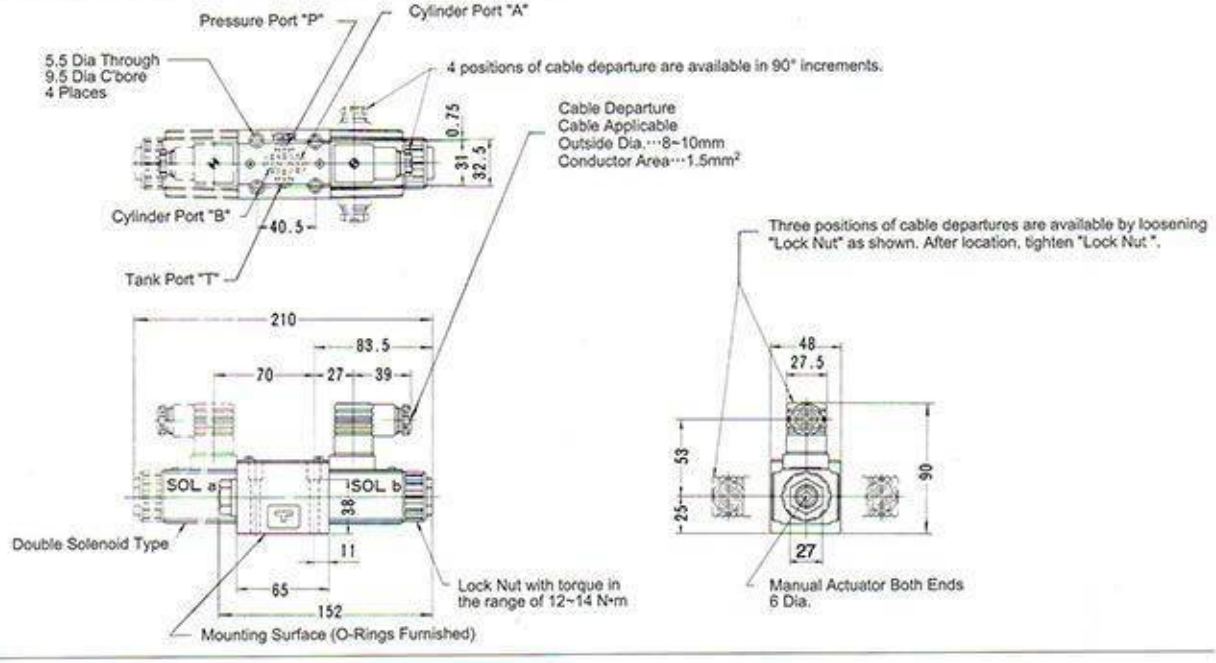

Model with DC solenoids : DSG-01-※※※-D※-N/N1
Model with R solenoids : DSG-01-※※※-R※-N/N1

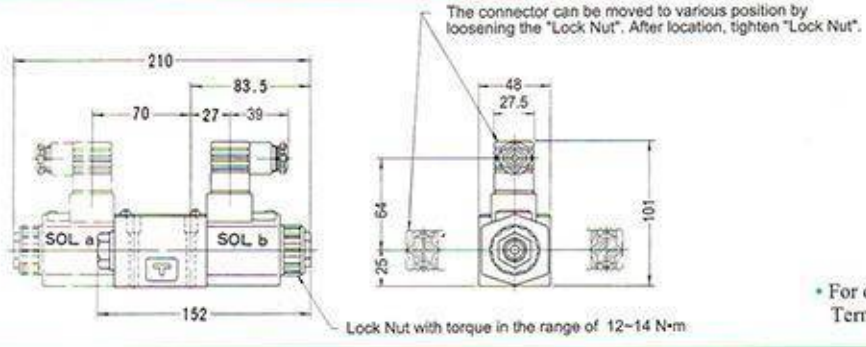

• For other dimensions, please refer to Terminal Box Type (page87).

Sub-plate : DSGM-01, 01X, 01Y

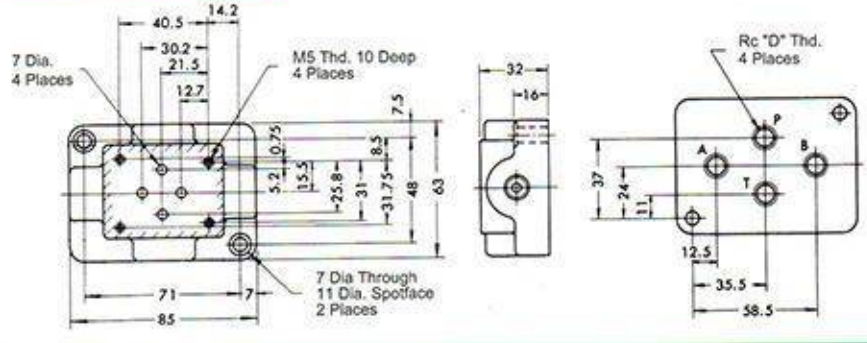

Model No.	D
DSGM-01-30	1/8
DSGM-01X-30	1/4
DSGM-01Y-30	3/8

Solenoid Operated Directional Valves Max. Pressure 31.5 MPa

DSG-03 Series

- These valves are adapted with strong wet-type solenoid and circuit designs to accomplish high pressure, large volume flow and lower pressure drop.
- The optimum valve for any system can be utilized since many spool types and various solenoids are all available, along with other optional function.
- **The pressure drop caused by the passing of pressurized oil is reduced to approx. 1/2 of the conventional Yuken model.**
- **Good Light Weight design has accomplished to reduce body weight.**

D

Specifications

Valve Size	Model No	Max. Flow L/min	Max. Pressure MPa (kgf/cm²)	Max. T-Line Back Pressure MPa (kgf/cm²)	Max Changeover Frequency Cycle/min	Mass kg Type of Solenoid AC	Mass kg Type of Solenoid DC.R
3/8	DSG-03-2B※-※-50	120	31.5 (315) (Spool Type 60 only 25 (250))	16 (160)	240 (R Type Only 120)	2.9	3.6
	DSG-03-2D2-※-50					3.6	5
	DSG-03-3C※-※-50					3.6	5

Model Number Designation

DSG-03-3C2-A110-N1-50-50Hz

- Series Number (Sub-plate mounting)
- Valve Size
- Valve Type (See table above)
- Coil Type: A110, A220, ★1 D12, D24, R110, R220
- ★1.DC with Rectifier.
  DC Terminal Type: Box Rectifier is put in the terminal box.
  DC Plug-In Type Connector: Rectifier is put in the connector.
- Electrical Conduit Connection
  None:Standard (Terminal Box Type)
  N: Plug-In Connector Type Without Indicator Light
  N1: Plug-In Connector Type With Indicator Light
- Design Number
- None: 60Hz or DC or R※
  50 Hz : 50Hz only
- ★Please note voltage applicable range for different frequency. In 50 Hz area, if you want to use same voltage as the coil type, please add (50Hz) after the design number.

Sub-plate

Valve Model No.	Sub-plate Model No.	Piping Size Rc	Mass kg
DSG-03	DSGM-03-40	Rc	3
	DSGM-03X-40	3/8	
	DSGM-03Y-40	1/2	4.7

- Sub-plates are available. When ordering, please specify sub-plate model no. from the table above.
- Please refer to page 91 for dimension details.

Valve Type

Valve Type	3C2	3C3	3C4	3C40	3C60	3C12
Graphic Symbol					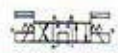	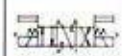
Valve Type	**2B2**	**2B3**	**2B8**	**2B2B**	**2D2**	**3C9**
Graphic Symbol		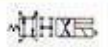			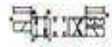	

- Valve, other than the types above are available, please contact our sales engineers for your requirements.
- 2B2,2B3,2B8 & 2D2 type valves have no center position.

Mounting Bolts (Attachment)

Socket Head Cap Screw	Tightening Torque
M6 x 35Lg 4pcs	12~15 N•m

Solenoid Rating

Electric Source	Coil Type	Serviceable Voltage Range Frequency (Hz)	Serviceable Voltage Range Voltage (V)	Current & Power at Rated Voltage Inrush (A)	Holding (A)	Power (W)
AC	A110/50Hz	50	100-120	3.90	0.78	39
	A110/60Hz	60	100-120	3.86	0.71	39
	A220/50Hz	50	200-240	1.82	0.34	37
	A220/60Hz	60	200-240	1.85	0.34	39
DC	D12	-	10.8-13.2	-	2.75	33
	D24	-	21.6-26.4	-	1.41	34
AC→DC	R110	50/60	100-120	-	0.42	38
	R220	60/60	200-240	-	0.20	38

There are other coil types available, please contact our sales engineers for your requirement.

Solenoid Operated Directional Valves Max. Pressure 31.5 MPa

D

Mounting Surface:ISO 4401-AC-05-4-A-80

Model with AC solenoids : DSG-03-※※※-A※

- Spring Centered
- No Spring Detented
- Spring Offset

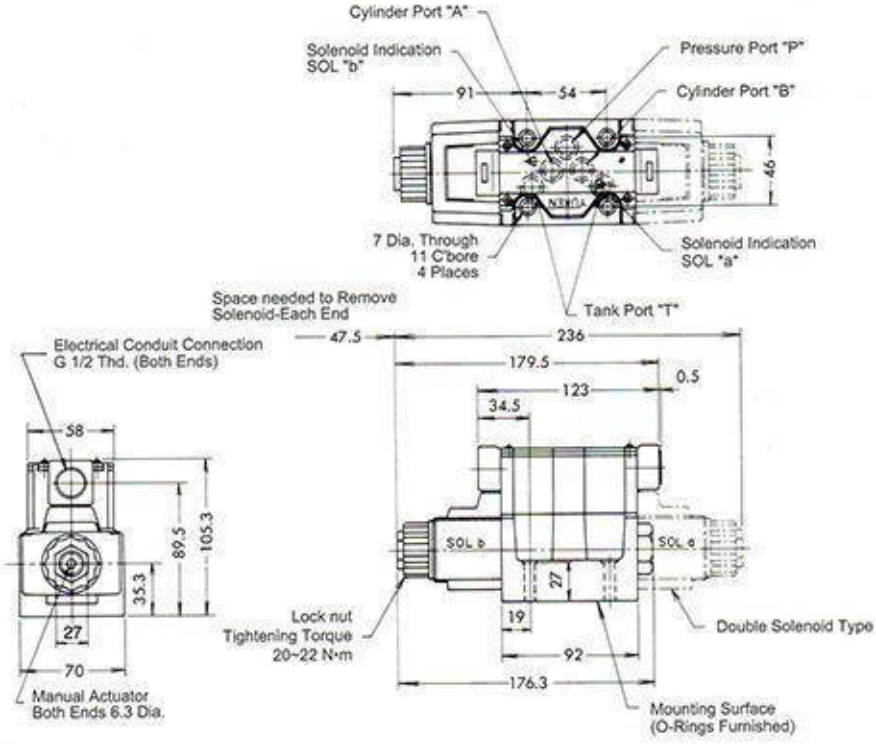

Mounting Surface:ISO 4401-AC-85-04-A-80

Model with DC solenoids : DSG-03-※※※-D※

Model with R solenoids : DSG-03-※※※-R※

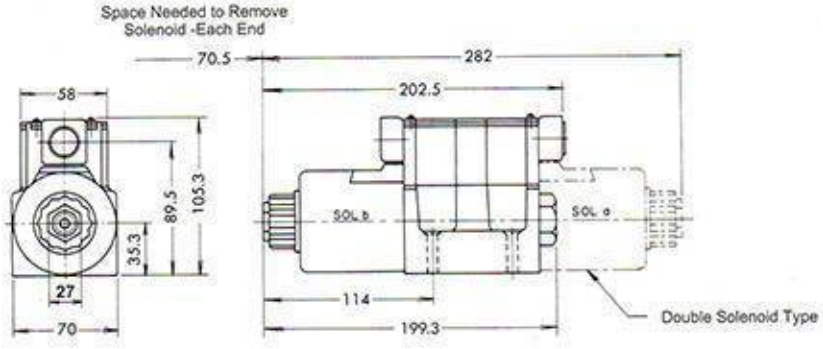

- For other dimensions, please refer to the above model with AC solenoids.

Note: For dimensions of mounting surface, please refer to DSGM-03 type sub-plate on page 91.

Solenoid Operated Directional Valves Max. Pressure 31.5 MPa

D

DIN type Connector, DIN Type Connector with Indicator Light

Model with AC Solenoids : DSG-03 -※※※-A※-N/N1

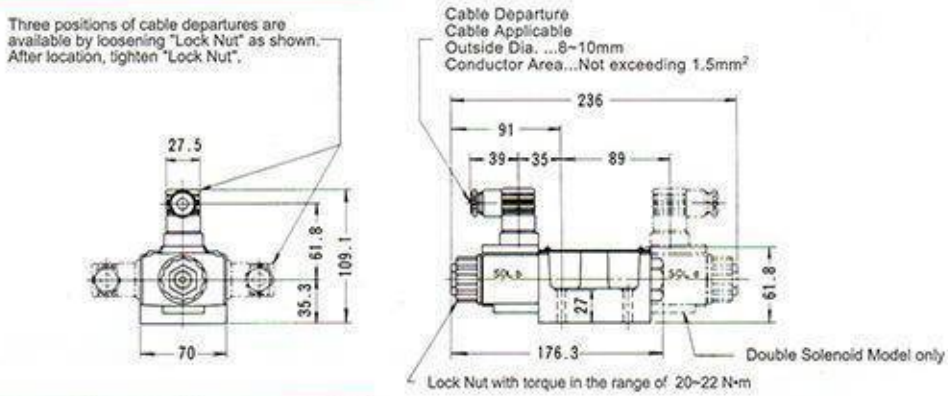

Model with DC solenoids : DSG-03-※※※-D※-N/N1
Model with R solenoids : DSG-03-※※※-R※-N/N1

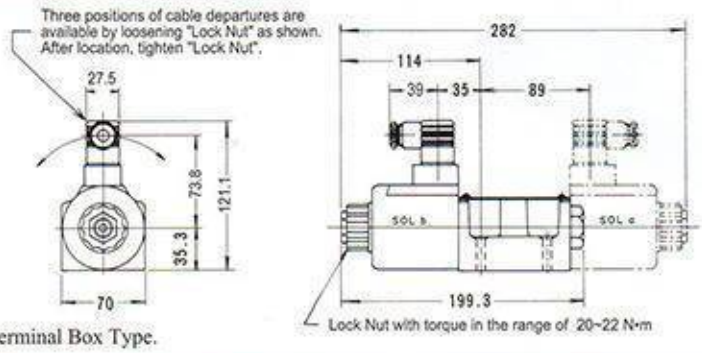

• For other dimensions, please refer to Terminal Box Type.

Sub-plate DSGM-03, 03X, 03Y-40

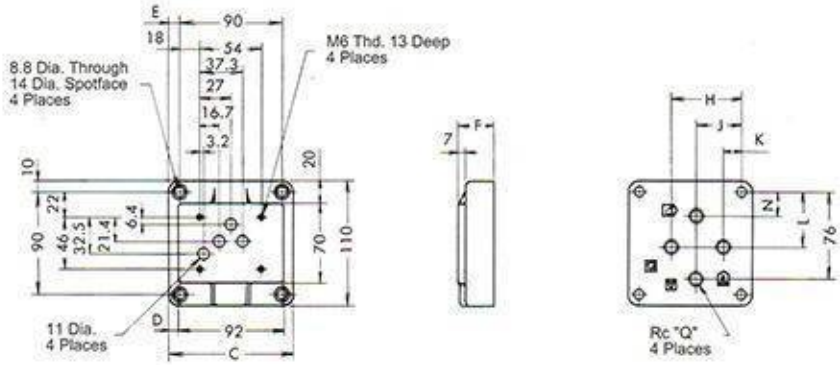

Model No.	C	D	E	F	H	J	K	L	N	Q
DSGM-03-40	110	9	10	32	62	40	16	48	21	3/8
DSGM-03X-40										1/2
DSGM-03Y-40	120	14	15	50	80	45	10	47	16	3/4

Solenoid Valves with Monitoring Switch-(S)-DSGS Max. Pressure 31.5 MPa

Injection Machines and Machine Tools
Patented
To improve the safety of hydraulic machines

China Patent No. ZL200820107394.0
Taiwan Patent No. M344413

D

- It can monitor the spool position shifting correctly.
- It is adopted with non-contact parts and zero-torn part with long-life.
- It can choose PNP output and directly check the function with little hysteresis.
- There is no special requirement for the water level in the fluid and the pollution.
- Dust-proof and water-proof level is IP 65. It will not be interfered by the external magnetic field.
- D24 Type Solenoid Valves was awarded CE certificate.

It is available for injection moulding machines, machine tools and the other hydraulic machines that need to improve the safety.

WARNING : The Monitoring switch has been set the position after testing. If you reverse any other directions,it may cause the monitoring switch out of function.

Specifications: For the flow and pressure details of valves, please refer to (S)-DSG-01/03-※-50

Valve Type	Model	Max. Flow L/min	Max. Pressure MPa	Max. T-Line Back Pressure MPa	Max. Changeover Frequency Cycle / min	Mass kg
Standard Type	DSGS-01-3C※-※-50(- L)	63	31.5 (Spool Type 60 only 25)	16	300 (R Type nly 120)	3.7
	DSGS-01-2B※-※-50(- L)					2.4
Sthockless Type	S-DSGS-01-3C※-※-50(- L)	40	16		120	3.7
	S-DSGS-01-2B2-※-50(- L)					2.4
Standard Type	DSGS-03-3C※-※-50(- L)	120	31.5 (Spool Type 60 only 25)		240 (R Type nly 120)	8.1
	DSGS-03-2B※-※-50(- L)					5.2
Sthockless Type	S-DSGS-03-3C※-※-50(- L)	120	16		120	8.1
	S-DSGS-03-2B2-※-50(- L)					5.2

Model Number Designation

S - DSGS - 01 - 3C2 - D24 - SW P 1 C - 50 - L

- S: Shockless Type None: standard S:Shockless
- DSGS: Series Number
- 01: Valve Size 01,03
- 3C2: Valve Type *1
- D24: Coll Type R110, R220, D12,D24 ※All for plug-in connector type with Indicator light
- SW: Monitoring switch position*2 SW: both side SA:Sa monitoring switch (SOL a) SB:Sb monitoring switch (SOL b)
- P: Monitoring Switch Coatact P: PNP (standard)
- 1: Monitoring Switch Coatact Type 1: NO normal open (standard)
- C: Connected Type C: M12 Connector (standard)
- 50: Design Number
- L: None: standard L: Solenoid Valves adverse mounting

1. Flow rate is as same as (S)-DSG-01/03--50 Please refer to P86 (DSG-01) and P89 (DSG-03)
*2. The monitoring switch (Sa) of SOL a is at A port. The monitoring switch (Sa) of SOL a is at B port.

Graphic Symbol

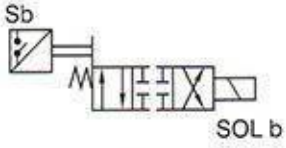

2B2-※-SBP1C Type

3C2-※-SWP1C Type

Monitoring Switch and Wiring Diagrams

Item	Specification
Supply Voltage Range	10~30 VDC
Max. Output Current	200 mA (32 VDC max.)
Switching Frequency	600 Hz
Ambient Temperature Range	-25~70 °C
Degree of Protection	IP 67

PNP-NO (Normal Open Type)

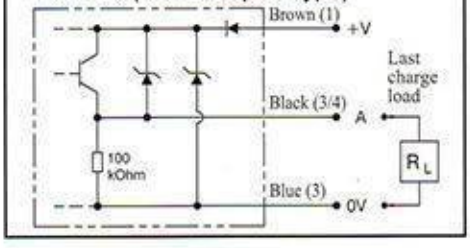

Mounting Bolts (Attachment)

Valve Model No.	Socket Head Cap Screw	Tightening Torque
(S)-DSGS-01	M5 x 45L 4 Pcs	6~7 N·m
(S)-DSGS-03	M6 x 35L 4 Pcs	12~15 N·m
DSHGS-06	M12 x 60L 6 Pcs	100~123N·m

Note) This series of valves can not be mounted in vertical way.

Switch M12 Connector with Wire (Options)

Model	Valve Type	Remark
M124R-PUR-2M (Straight type)	(S)-DSHGS-04-※-※-※-50(- L)	2M:2M (Oil Resistance Cables)
M124RL-PUR-2M (90° Type)	(S)-DSHGS-06-※-※-※-50(- L)	

Solenoid Valves with Monitoring Switch-(S)-DSGS Max. Pressure 31.5 MPa

(S)-DSGS-01

Mounting Surface: ISO 4401-AB-03-4-A Standard

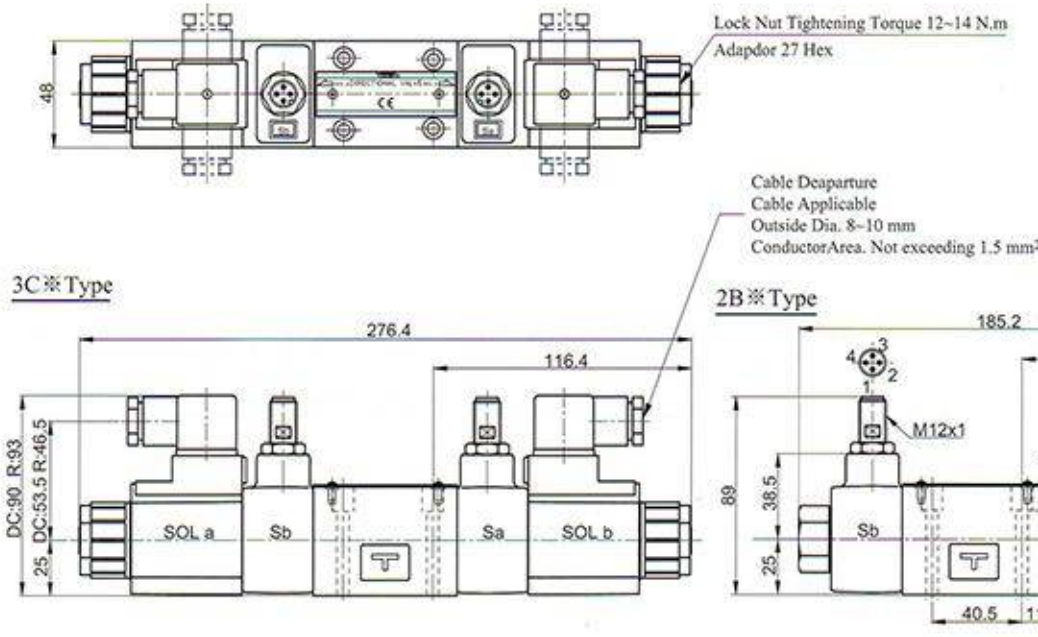

Note) For dimensions of valves mounting surface, please refer to DSGM-01 sub-plate on page 88.

(S)-DSGS-03

Mounting Surface: ISO 4401-AC-05-4-A Standard

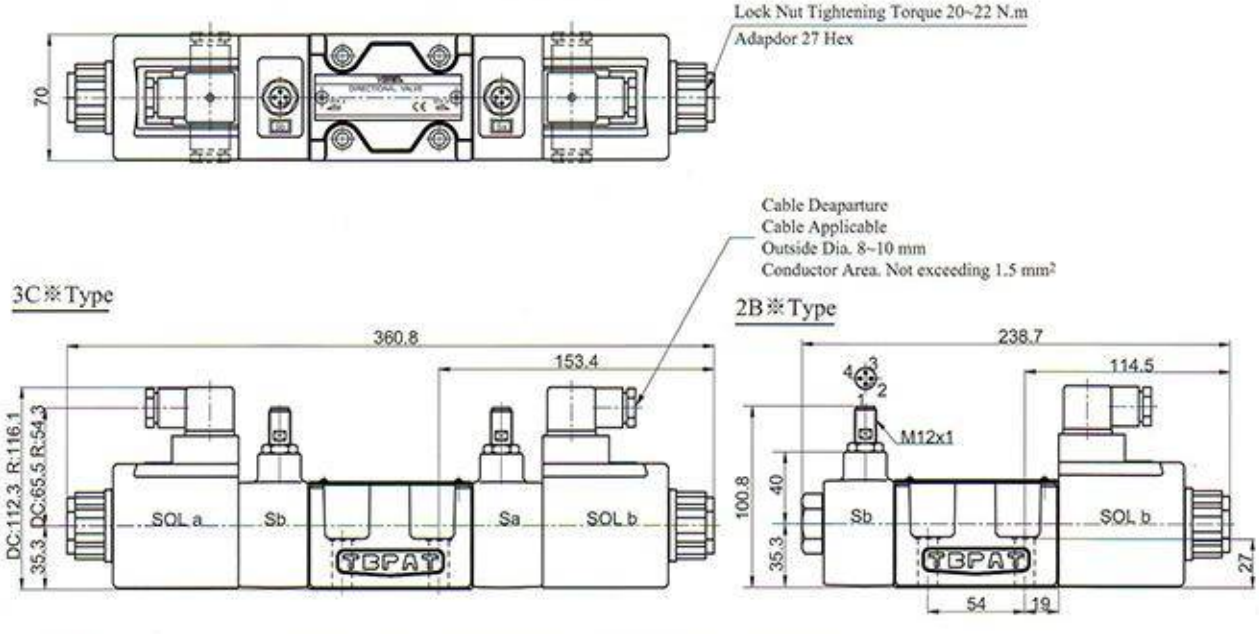

Note) For dimensions of valves mounting surface, please refer to DSGM-03 sub-plate on page 91.

Solenoid Controlled Pilot Operated Directional Valves Max. Pressure 31.5 MPa

D

DSHG Series

These valves are composed of a solenoid operated pilot valve and a pilot operated slave valve. When a solenoid is energized the pilot valve directs the flow to move the spool of the slave valve, thus changing the direction of flow in the hydraulic circuit.

●High Pressure High Flow

High pressure (315kgf/cm²) along with high flow means compact system design. (e.g. "04" size valve- 300 L/min,"06" size valve- 500 L/min, "10" size valve- 1100 L/min.

●Lower Pressure Drop

System energy saving increased as pressure drop of each valve has been greatly reduced.

■Specifications

Valve Size	Model Number	*1 Max. Flow L/min	Max. Operating Pressure MPa (kgf/cm²)	Max. Pilot Pressure MPa (kgf/cm²)	Max. T-Line Back Pressure MPa	Changeover Frequency Cycles/min	Mass kg
1/2	DSHG-04-2B※-※-50	300	31.5 (315)	0.8~25 (8~250)	21 (16) *2	120	8.2
	DSHG-04-3C※-※-50						8.8
	DSHG-04-2N※-※-50						8.8
3/4	DSHG-06-2B※-※-51	500	31.5 (315)	0.8~25 (8~250)	21 (16) *2	120	12.1
	DSHG-06-3C※-※-51						12.7
	DSHG-06-2N※-※-51						12.7
1 1/4	DSHG-10-2B※-※-41	1100	31.5 (315)	1~21 (10~210)	21 (16) *2	60	44.7
	DSHG-10-3C※-※-41			1~25 (10~250)		100	45.3
	DSHG-10-2N※-※-41					120	45.3

*1 Max. flow depends on the type of spool and operating conditions.
*2 Please refer to the bracket for T-Line back pressure.

■Graphic Symbol with Choke Valve

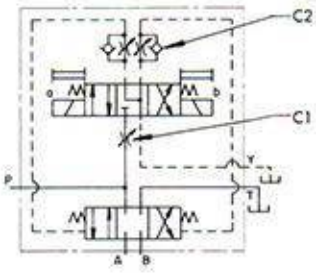

■Model Number Designation

DSHG-04-3C2-CI-ET-A110-N1-※-50HZ

- Series Number (Sub-plate mounting)
- Valve Size 04, 06, 10
- Valve Type (Please refer to next page)
- With pilot choke valve(optional)
  - C1: with C1 Choke valve
  - C2: with C2 Choke valve
  - C1C2: with C1 & C2 Choke valve
  - (Omit if not required)
- Nobe: 60Hz or DC or R※
  - 50 Hz: 50Hz only
- ★Please note voltage applicable range for different frequency. In 50 Hz area, if you want to use same voltage as the coil type, please add (50Hz) after the design number.
- Design Number
- Electrical Conduit Connection
- Coil Type
  - A110, A220, D12, D24, R110, R220...etc.
- * Drain Connection T:Internal Drain. None: External Drain
- * Pilot Connection E:External Pilot. None: Internal pilot

* Classification of application on spool type "3", "5", "60" & "7" has been described as below.

Pilot Connection	Drain Connection	Attention
Internal Pilot	External Drain	Hold back pressure in the tank line so that the difference between pilot pressure and drain pressure is always more than minimum required pilot pressure.
	Internal Drain	Combination is not available.
External Pilot	External Drain	No limitation in use.
	Internal Drain	

●Minimum Pilot pressure: 1/2, 3/4 size valve are 0.8 MPa (kgf/cm²),1-1/4 size valve is 1 MPa (10kgf/cm²).

Solenoid Controlled Pilot Operated Directional Valves Max. Pressure 31.5 MPa

Valve Type

Valve Type	3C2	3C3	3C4	3C40	3C60*
Graphical Symbol		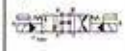			
Valve Type	3C12	2B2*	2B7*	2N2*	2N7*
Graphical Symbol		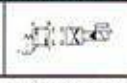	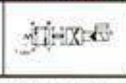		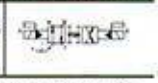

- Valves, other than the type above are available, please contact our sales engineers for your requirement.
- The "2B2", "2B7", "2N2" & "2N7" type valves have no center position.

Pilot Valve Type

Valve Model No.		Pilot Valve Model No.	
DSHG-04-	2B*	DSG-01-2B2-*-50	Please refer to page 86
	3C*	DSG-01-3C4-*-50	
DSHG-06-	2B*	DSG-01-2B2-*-50-L	
	3C*	DSG-01-3C4-*-50	
DSHG-10-	2B*	DSG-01-2B2-*-50-L	
	3C*	DSG-01-3C4-*-50	

D

Sub-plate

Valve Model No.	Sub-plate Model No.	Piping Size Rc	Mass kg
DSHG-04	DHGM-04-20	1/2	4.4
	DHGM-04X-20	3/4	4.1
DSHG-06	DHGM-06-50	3/4	7.4
	DHGM-06X-50	1	
DSHG-10	DHGM-10-40	1 1/4	21.5
	DHGM-10X-40	1 1/2	

Sub-plates are available. When ordering, please specify sub-plate model from the table above. Please refer to page 97, 98 for dimensions.

Mounting Bolts (Attachment)

Valve Model No.	Socket Head Cap Screw	Q'ty	Tightening Torque N•m (kgf.m)
DSHG-04	M6 x 45 Lg	2	12~15 (1.2~1.5)
	M10 x 50 Lg	4	58~72 (5.9~7.3)
DSHG-06	M12 x 60 Lg	6	100~123 (10.2~12.5)
DSHG-10	M20 x 75 Lg	6	473~585 (48.2~59.7)

DSHG-04

Mounting Surface:ISO 4401-AD-07-4-A-80

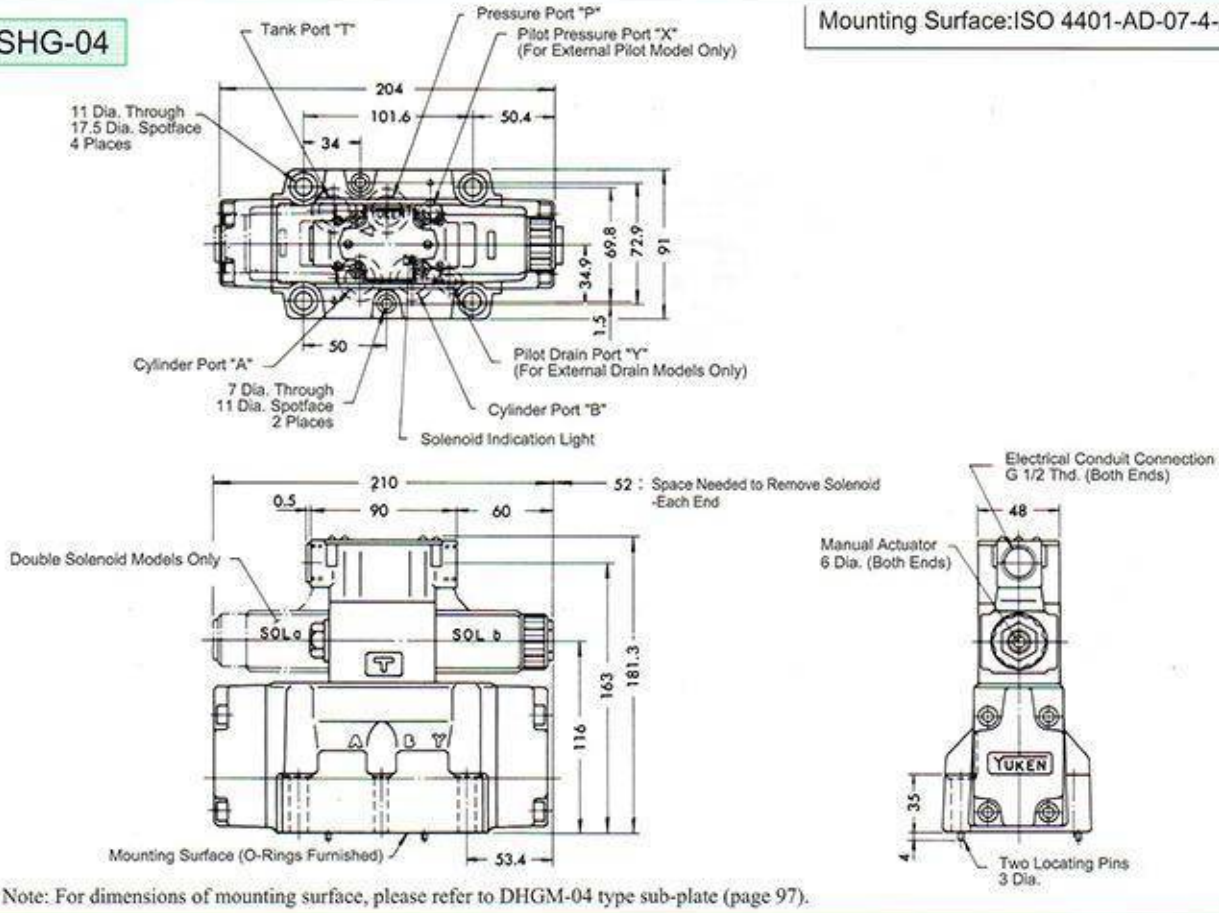

Note: For dimensions of mounting surface, please refer to DHGM-04 type sub-plate (page 97).

Solenoid Controlled Pilot Operated Directional Valves Max. Pressure 31.5 MPa

D

DSHG-06

Mounting Surface:ISO 4401-AE-08-4-A-80

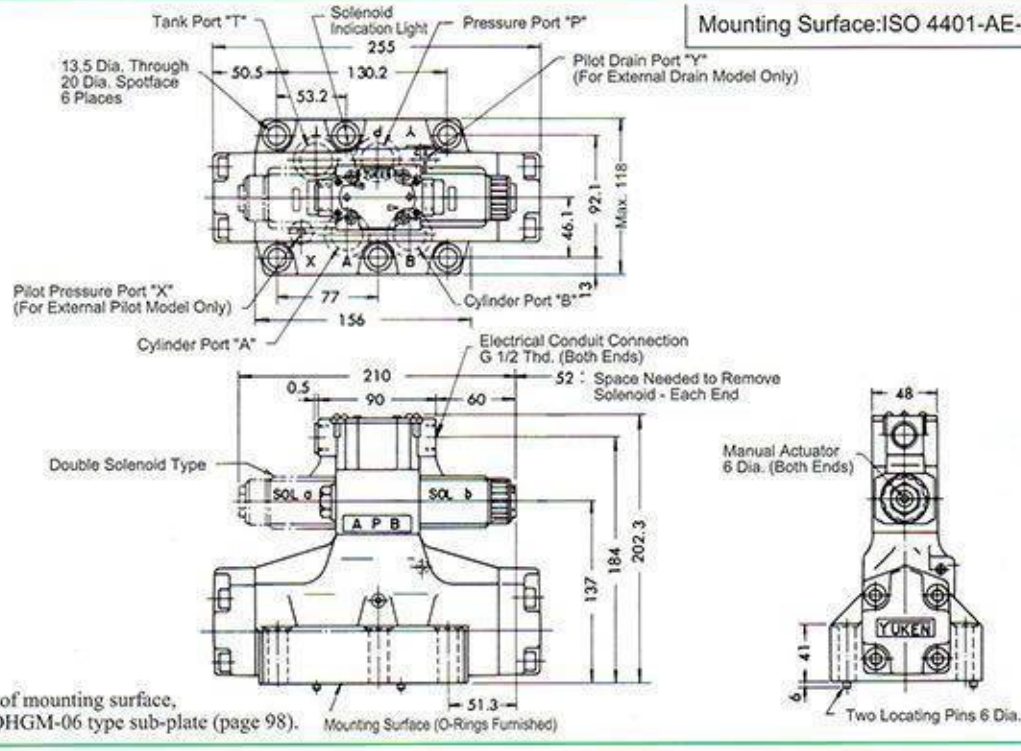

Note: For dimensions of mounting surface, please refer to DHGM-06 type sub-plate (page 98).

DSHG-10

Mounting Surface:ISO 4401-AF-10-4-A-80

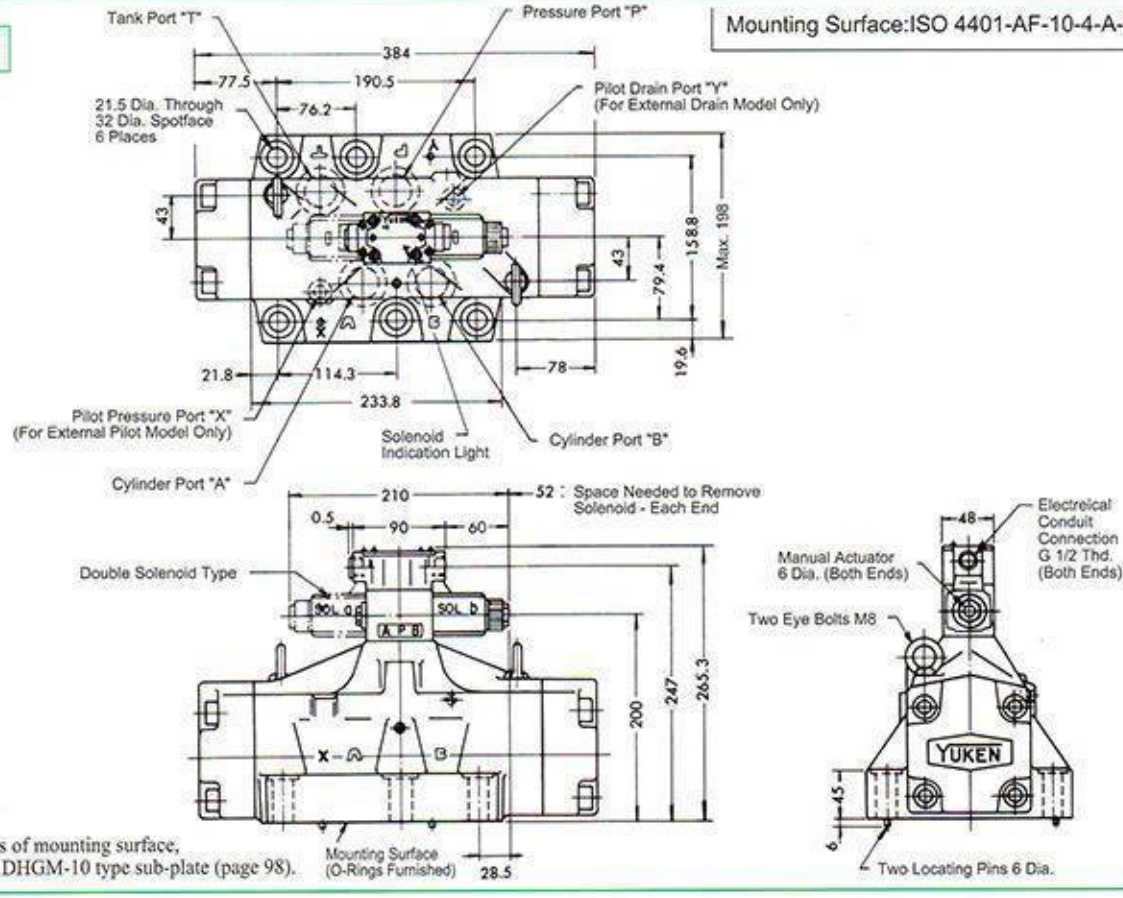

Note: For dimensions of mounting surface, please refer to DHGM-10 type sub-plate (page 98).

Solenoid Controlled Pilot Operated Directional Valves Max. Pressure 31.5 MPa

D

Options-Model with Pilot Choke Valve

DSHG-04-※※※-C1,C2,C1C2

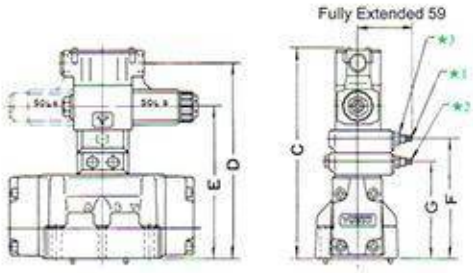

DSHG-06/10-※※※-C1,C2,C1C2

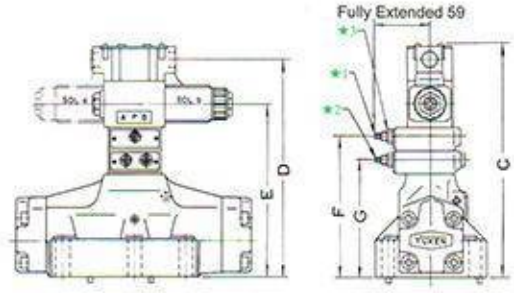

※1. C1 Choke Adj. (TC1G-01)
Screw 6 Hex, Lock Nut 12 Hex

※2. C2 Choke Adj. (TC2G-01)
Screw 6 Hex, Lock Nut 12 Hex

Model No.	C	D	E	F	G
DSHG-04-※※※-C1	206.3	188	141	106	-
DSHG-04-※※※-C2				-	106
DSHG-04-※※※-C1C2	231.3	213	166	131	106
DSHG-06-※※※-C1	227.3	209	162	127	-
DSHG-06-※※※-C2				-	127
DSHG-06-※※※-C1C2	252.3	234	187	152	127
DSHG-10-※※※-C1	290.3	272	225	190	-
DSHG-10-※※※-C2				-	190
DSHG-10-※※※-C1C2	315.3	297	250	215	190

Sub-Plate: DHGM-04 / 04X-20

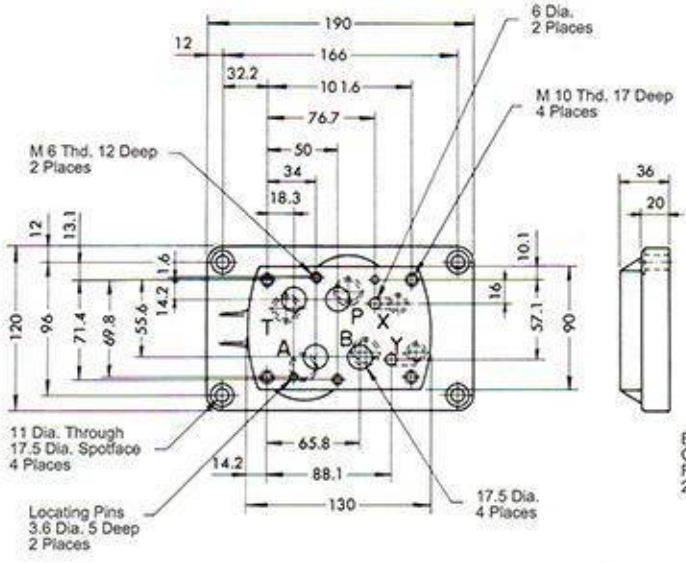

Sub-plate Model No.	D
DHGM-04-20	1/2
DHGM-04X-20	3/4

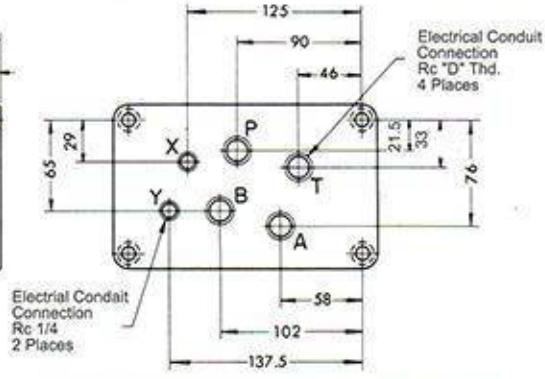

Solenoid Controlled Pilot Operated Directional Valves Max. Pressure 31.5 MPa

D

Sub-plate DHGM-06 / 06X-50

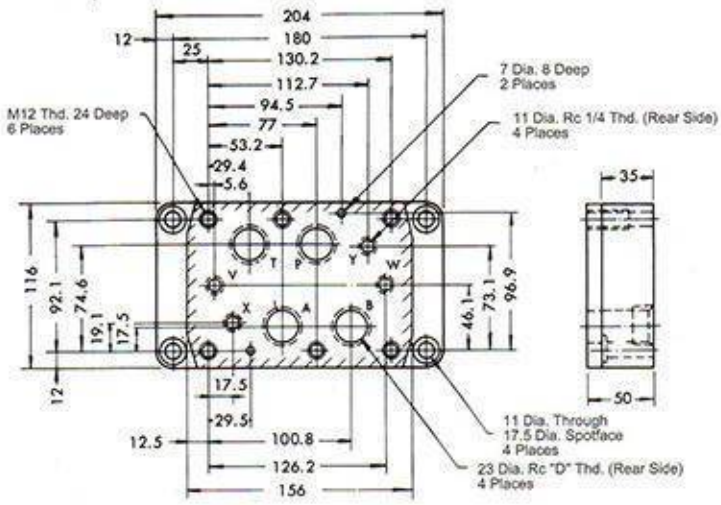

Model No.	D
DHGM-06-50	3/4
DHGM-06X-50	1

Sub-plate DHGM-10 / 10X-40

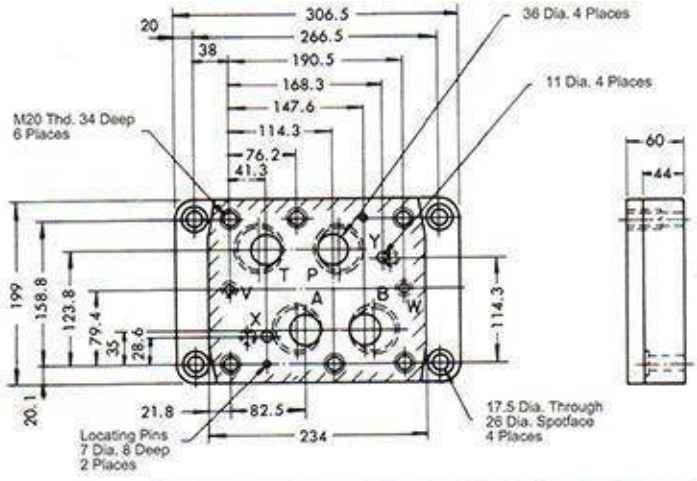

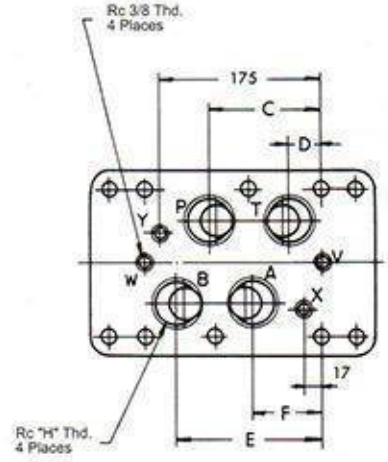

Model No.	C	D	E	F	H
DHGM-10-40	114	41	147.5	82.5	1-1/4
DHGM-10X-40	118	36	156.5	74.5	1-1/2

Note: For Uses of Port "X" "Y" , "V" and "W"

Valve Types		X	Y	V*W*
Solenoid Controlled Pilot Operated Directional Valves (DSHG)	Spring Centered No Spring Spring Offset	Used as pilot port only on external pilot type valves. To be plugged on internal pilot type valves	Used as drain port only on external drain type valves. To be plugged on internal drain type valves	Not used (Plug is not required)
Pilot Operated Directional Valves (DHG)	Spring Centered No Spring	Used as pilot pressure port / drain port	Used as pilot pressure port / drain port	
	Spring Offset	Used as pilot pressure port	Used as pilot drain port	

*DHGM-04, 04X types do not have these ports. (Port "V" and Port "W")

Solenoid Valves with Monitoring Switch-DSHGN

Max. Pressure 25 MPa

- It can monitor the spool position shifting correctly.
- It is adopted with non-contact parts and zero-torn part with long-life.
- There are two cmonitoring switch contact for PNP and NPN type.
- It can directly check the function with little hysteresis.
- There is no special requirement for the water and the pollution of the hydraulic fluid.
- Dust-proof and water-proof level is IP 65.
- It will not be interfered by the external magnetic field.

D

⚠ WARNING : The Monitoring switch has been set the position after testing. If you reverse any other directions, it may cause the monitoring switch out of function.

Graphic Symbol

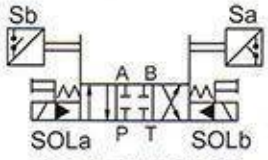

3C2-※-SWP1C Type

2B2-※-SBP1C Type

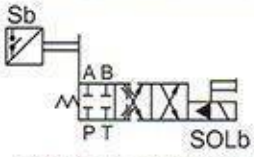

2B2B-※-SBP1C Type

Sub-plate

Valve Model No.	Sub-plate Model No.	Piping Size Rc	Mass kg
DSHGN-03	DHGM-03Y-10	3/4	4.7
DSHGN-04	DHGM-04-20	1/2	4.4
	DHGM-04X-20	3/4	4.1
DSHGN-06	DHGM-06-50	3/4	7.4
	DHGM-06X-50	1	

•Sub-plates are available. When ordering, please specify sub-plate model no.from the table above.
•Please refer to page P97(DHGM-04),P98(DHGM-06), P103(DHGM-03)

Mounting Bolts (Attachment)

Valve Model No.	Socket Head Cap Screw	Tightening Torque
DSHGN-03	M6 x 35L 4 Pcs	11.8~14.7 N·m
DSHGN-04	M6 x 45L 2 Pcs	11.8~14.7 N·m
	M10 x 50L 4 Pcs	57.9~71.6 N·m
DSHGN-06	M12 x 60L 6 Pcs	100~122.6 N·m

Specifications: For the flow and pressure drop details, please refer to DSHG-03/04/06

Model	Max. Flow L/min	Max. Pressure MPa	Max. T-Line Back Pressure MPa	Max. Changeover Frequency Cycle / min	Mass kg SW	SA	SB
DSHGN-03-3C2-※-10	160	25	16	120	9.3	8.5	8.5
DSHGN-03-2B2B-※-10(- L)					8.8	8.0	8.0
DSHGN-03-2B2-※-10(- L)					9.3	8.0	8.5
DSHGN-04-3C2-※-50	300	25	21 (Internal Drain : 16)	120	10.2	9.6	9.6
DSHGN-04-2B2B-※-50(- L)					9.7	9.0	9.0
DSHGN-04-2B2-※-50(- L)					10.1	9.4	9.5
DSHGN-06-3C2-※-51	500	25	21 (Internal Drain : 16)	120	15.0	13.9	13.9
DSHGN-06-2B2B-※-51(- L)					14.4	13.3	13.3
DSHGN-06-2B2-※-51(- L)					15.1	14.3	14.0

Model Number Designation

DSHGN - 03 - 3C2- C1 - E T - D24 - SW P 1 N - 10 - L

- Series Number DSHGN : Solenoid Valve wth Monitoring Switch (Sub-plate mounting
- Valve Size 03, 04, 06
- Valve Type 3C2, 2B2B, 2B2
- Models with Pilot Choke Valve
  C1: with C1 Choke (TC1G-01-40)
  C2: with C2 Choke (TC2G-01-40)
  C1C2: with C1&C2 Choke
  (Omit if not required)
- Pilot Connection
  E: External Pilot
  None: Internal Pilot
- Drain Connection
  T: Internal; Drain
  None: External Drain
- Coil Type
  R110, R220, D12,D24
  ※All for plug-in connector type with Indicator light
- Monitoring switch position*1
  SW: both side
  SA:Sa monitoring switch (SOL a)
  SB:Sb monitoring switch (SOL b)
- Monitoring Switch Coatact
  P: PNP (standard)
  N: NPN
- Monitoring Switch Coatact Type
  1: NO normal open (standard)
- Connected Type
  N: DIN Connector Only For (DSHGN-03)
  C: M12 Connector Only For (DSHGN-04/06)
- Design Number
  DSHGN-03 : 10
  DSHGN-04 : 50
  DSHGN-06 : 51
- None: standard
  L: Models with Reverse Mtg of Solenoid

*1. The monitoring switch (Sa) of SOL a is at A port. The monitoring switch (Sa) of SOL a is at B port.

Switch M12 Connector with Leading Wire (Options)

Model	Valve Type	Remark
M124R-PUR-2M (Straight type)	DSHGN-04-※-※-※C-50(- L)	2M: 2M (Oil Resistance Cables)
M124RL-PUR-2M (90° Type)	DSHGN-06-※-※-※C-51(- L)	

Solenoid Valves with Monitoring Switch-DSHGN

Max. Pressure 25 MPa

D

Monitoring Switch and Wiring Diagrams

DSHGN-03

PNP N.O.

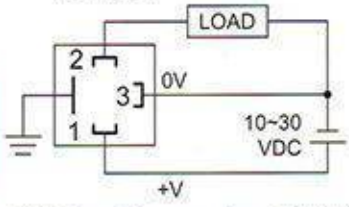

NPN N.O.

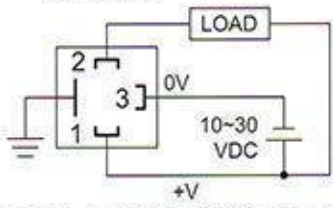

DSHGN-04/06

PNP N.O.

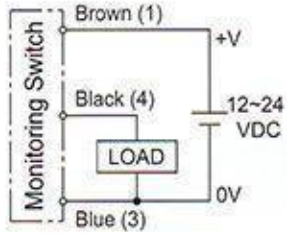

NPN N.O.

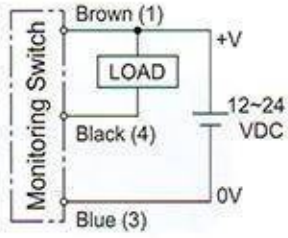

※1. Current Consumption : DSHGN-03 ≦ 15mA : DSHGN-04/06 ≦ 13mA
※2. Max. Output Current : Under 200mA

DSHGN-03

Mounting Surface: ISO 4401-05-05-0-94

3C2 / 2B2B - SW / SA / SB

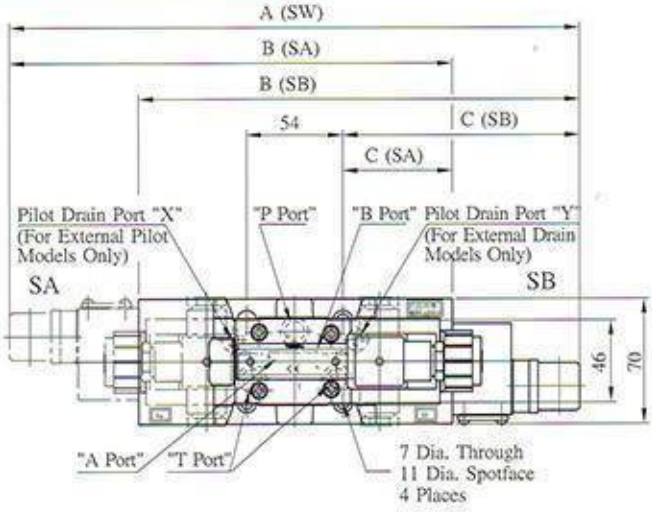

2B2 - SW / SA

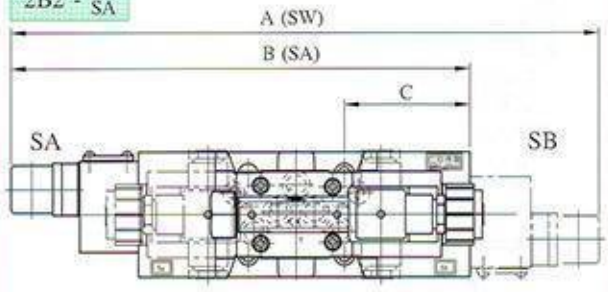

2B2 - SW / SB

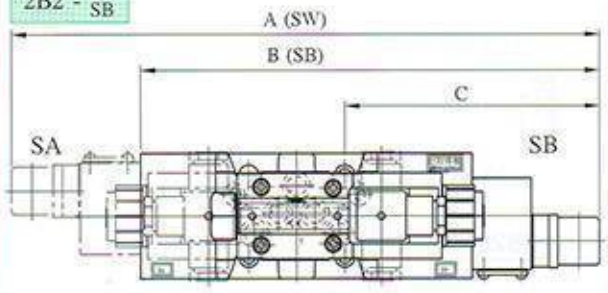

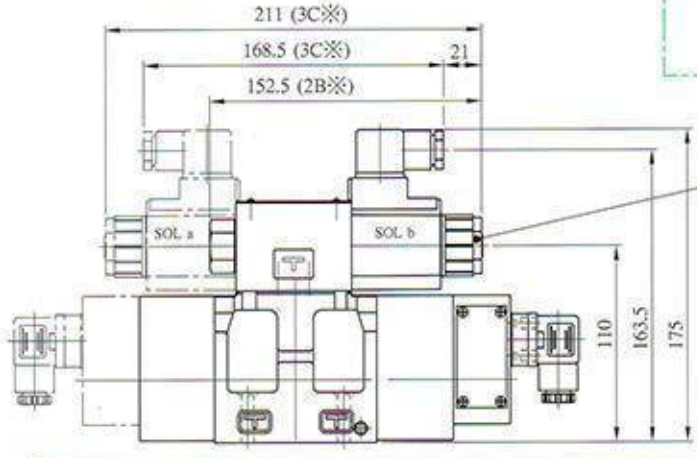

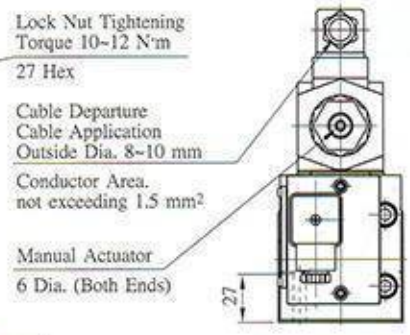

ITEM	A	B		C	
	SW	SA	SB	SA	SB
DSHGN-03-3C2-※	320	248.5	247.5	61.5	133
DSHGN-03-2B2B-※					
DSHGN-03-2B2-※	330	257.5	257.5	70.5	143

YUKEN
OIL HYDRAULIC EQUIPMENT

Solenoid Valves with Monitoring Switch-DSHGN

Max. Pressure 25 MPa

D

DSHGN-04

Mounting Surface: ISO 4401-AD-07-4-A-80

3C2 / 2B2B - SW / SA / SB

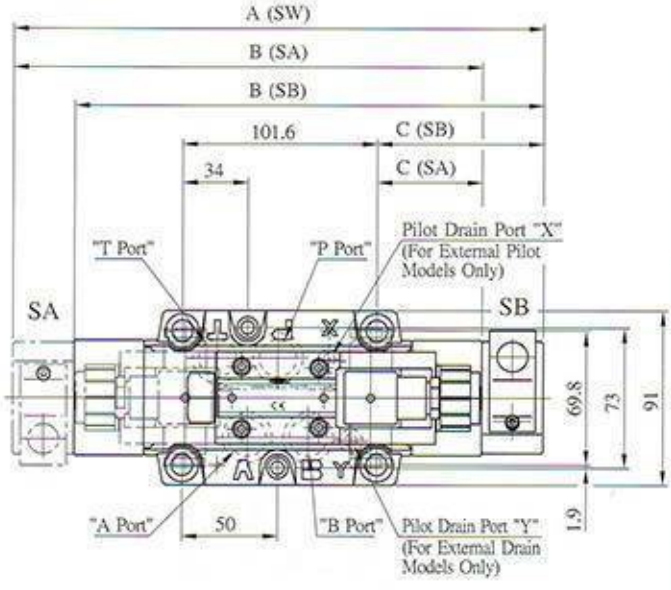

2B2 - SW / SA

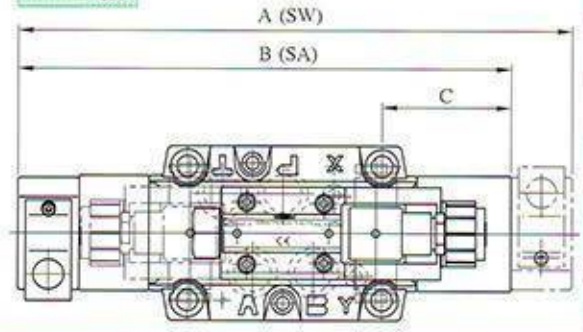

2B2 - SW / SB

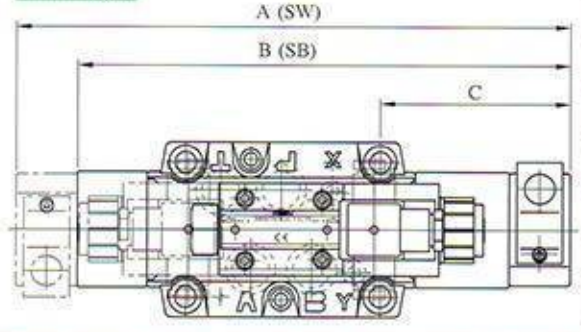

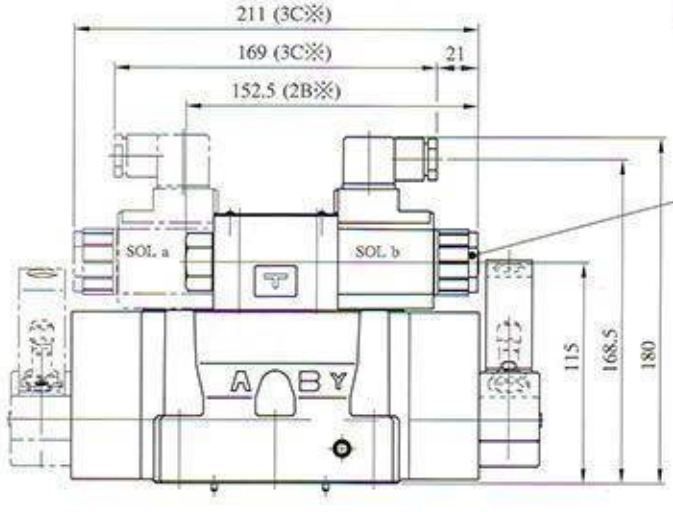

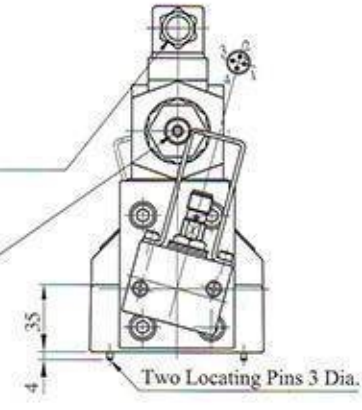

ITEM	A	B		C	
	SW	SA	SB	SA	SB
DSHGN-04-3C2-※	277	240.5	240.5	50.4	87.5
DSHGN-04-2B2B-※					
DSHGN-04-2B2-※	289.5	253	253	62.9	99.4

Solenoid Valves with Monitoring Switch-DSHGN

Max. Pressure 25 MPa

D

DSHGN-06

Mounting Surface: ISO 4401-AE-08-4-A-80

3C2 / 2B2B - SW / SA / SB

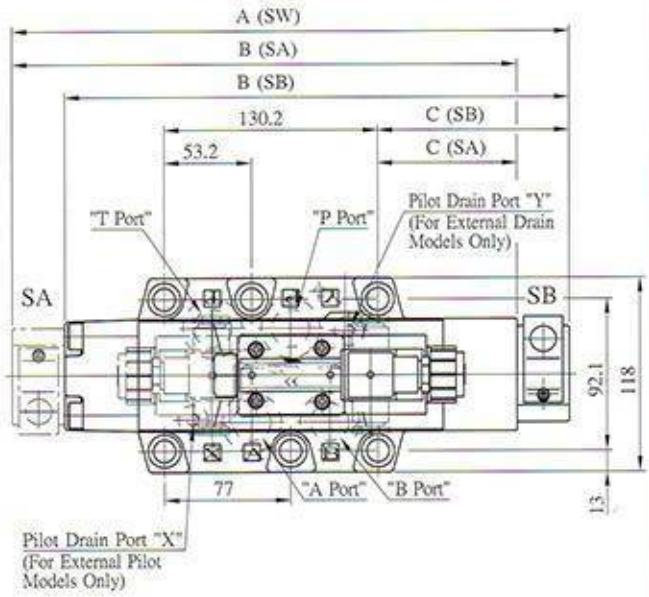

2B2 - SW / SA

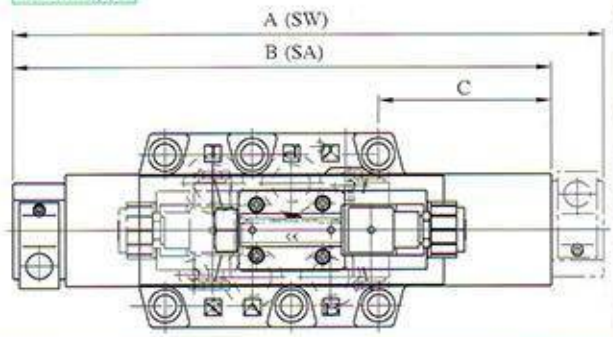

2B2 - SW / SB

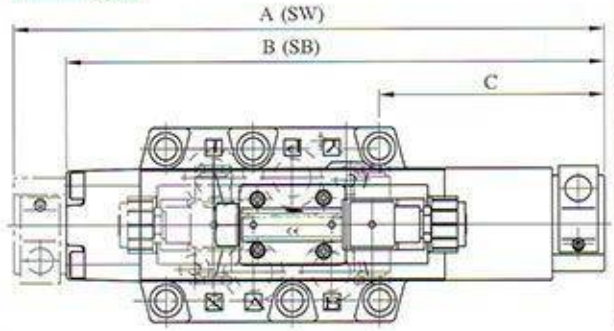

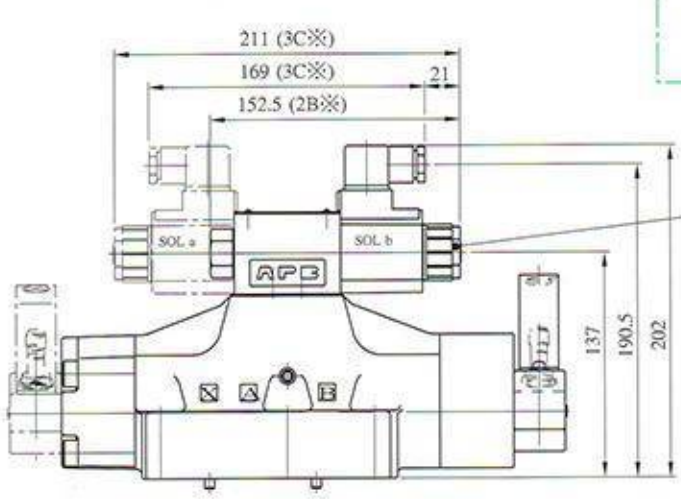

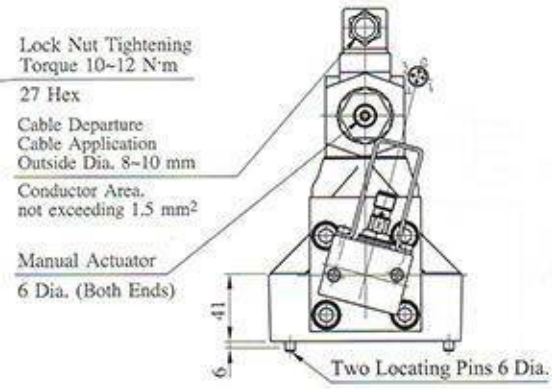

ITEM	A	B		C	
	SW	SA	SB	SA	SB
DSHGN-06-3C2-※	340	297.5	297.5	74.5	117.5
DSHGN-06-2B2B-※					
DSHGN-06-2B2-※	360.5	318.5	318	95.5	137.5

Solenoid Valves with Monitoring Switch-DSHGN

Max. Pressure 25 MPa

Sub-Plate: DHGM-03Y

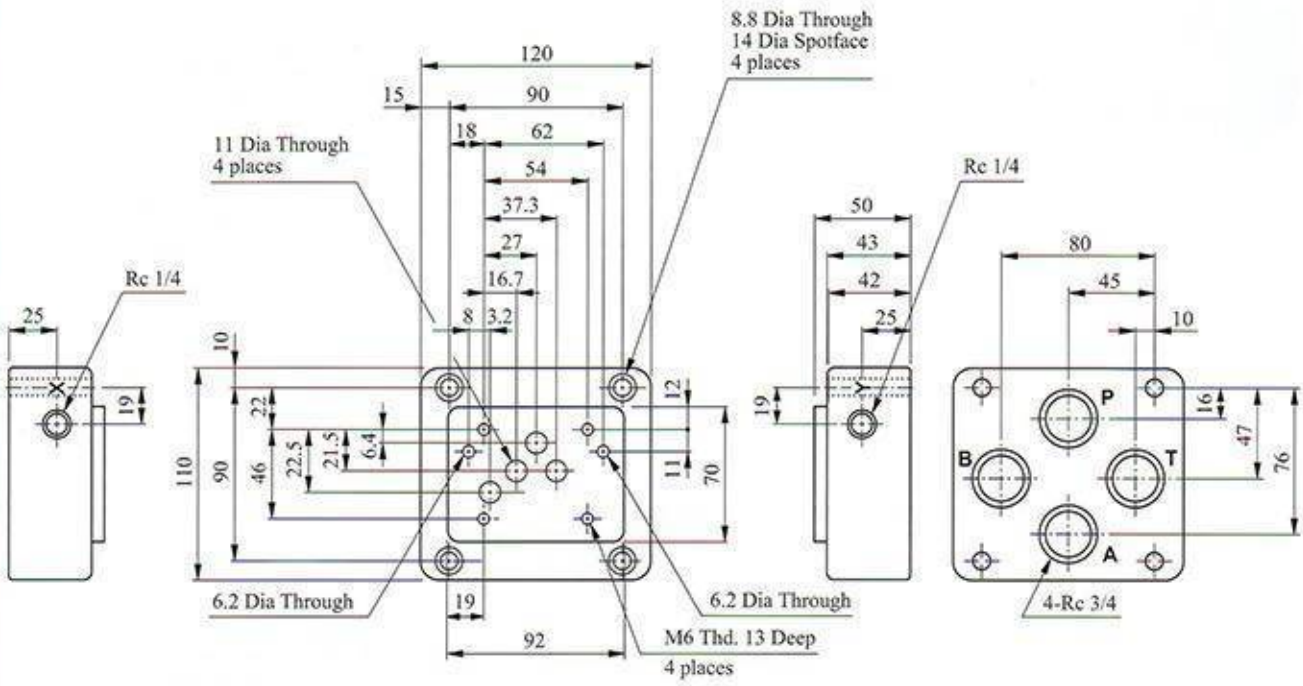

Pilot Operated Directional Valves Max. Pressure 31.5 MPa

D

The valves control the direction of flow by way of the pilot pressure provided from a remote source.

Specifications

Valve Size	Model No.	Max. Flow L/min	Max. Pilot Pressure MPa (kgf/cm²)	Min. Pilot Pressure MPa (kgf/cm²)	Max. T-Line Back Press. MPa (kgf/cm²)	Mass kg
1/2	DHG-04-2B※-50	130	31.5 (315)	0.8-25 (8-250)	21 (210)	7.8
	DHG-04-3C※-50	300				7.4
	DHG-04-2N※-50	300				7.4
3/4	DHG-06-2B※-50	140	31.5 (315)	0.8-25 (8-250)	21 (210)	11.7
	DHG-06-3C※-50	500				11.2
	DHG-06-2N※-50	500				11.2
1 1/4	DHG-10-2B※-40	460	31.5 (315)	1.0-25 (10-250)	21 (210)	45.6
	DHG-10-3C※-40	1100				43.8
	DHG-10-2N※-40	1100				43.8

Model Number Designation

DHG-04-3C2-C2-※

- Series Number (Sub-plate mounting)
- Valve Size: 04, 06, 10
- Valve Type (See table above)
- With Pilot Choke Valve (Option) C2: with C2 Choke valve (TC2G-01-40) (Omit if not required)
- Design Number

Valve Type

Valve Type	3C2	3C4	3C40	3C5	3C60
Graphic Symbol	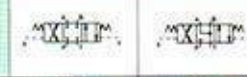	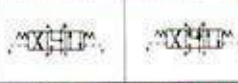	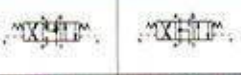		
Valve Type	**3C12**	**2B2 ***	**2B7 ***	**2N2 ***	**2N7 ***
Graphic Symbol	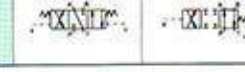			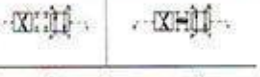	

* Valves, other than the type above are available, please contact our sales engineers for your requirement.
* The 2B2, 2B7, 2N2 & 2N7 type valves have no center position.

Sub-plate

Valve Model No.	Sub-plate Model No.	Piping Size Rc	Mass kg
DHG-04	DHGM-04-20	1/2	4.4
	DHGM-04X-20	3/4	4.1
DHG-06	DHGM-06-50	3/4	7.4
	DHGM-06X-50	1	
DHG-10	DHGM-10-40	1 1/4	21.5
	DHGM-10X-40	1 1/2	

- Sub-plates are available. When ordering, please specify sub-plate model no.from the table above.
- Please refer to page 97, 98 for dimensions.

Mounting Bolts (Attachment)

Valve Model No.	Socket Head Cap Screw	Q'ty	Tightening Torque N•m (kgf·m)
DHG-04	M6 x 45 Lg	2	12~15 (1.2~1.5)
	M10 x 50 Lg	4	58~72 (5.9~7.3)
DHG-06	M12 x 60 Lg	6	100~123 (10.2~12.5)
DHG-10	M20 x 75 Lg	6	473~585 (48.2~59.7)

Pilot Operated Directional Valves Max. Pressure 31.5 MPa

DHG-04

Mounting Surface:ISO 4401-AD-07-4-A-80

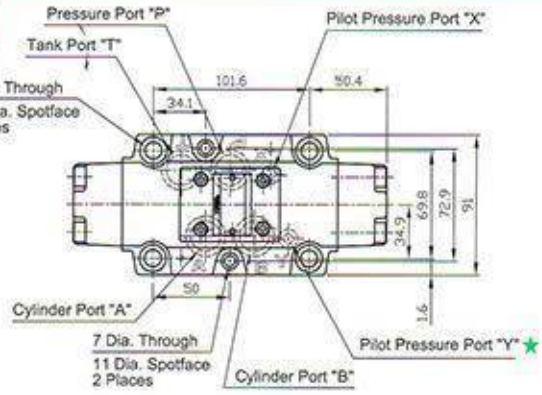

★In case of Spring Offset model (2B※)
It functions as a drain port.
When the model is used, please connect it directly to the reservoir.

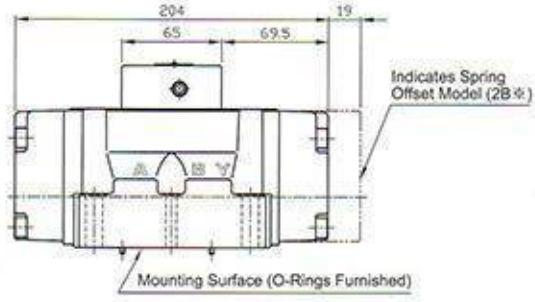

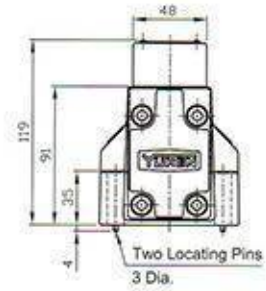

Note: For dimensions of mounting surface, please refer to DHGM-04 type sub-plate (page 97).

DHG-06

Mounting Surface:ISO 4401-AE-08-4-A-80

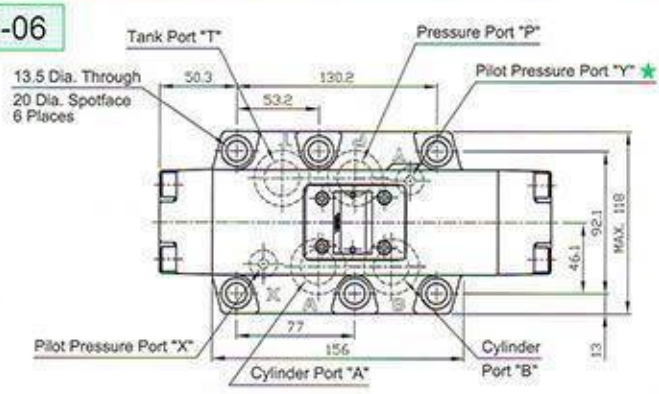

★In case of Spring Offset model (2B※)
It functions as a drain port.
When the model is used, please connect it directly to the reservoir.

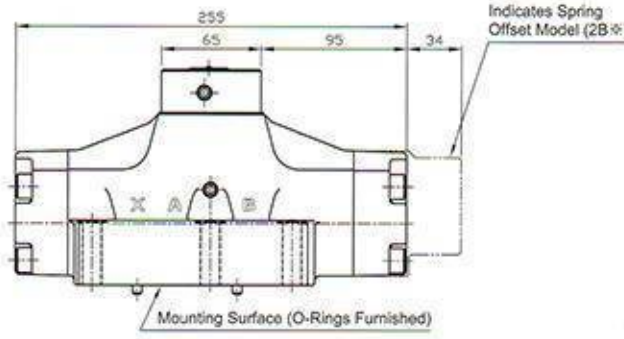

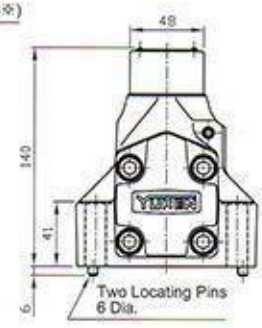

Note: For dimensions of mounting surface, please refer to DHGM-06 type sub-plate (page 98).

Pilot Operated Directional Valves Max. Pressure 31.5 MPa

D

DHG-10

Mounting Surface:ISO 4401-AF-10-4-A

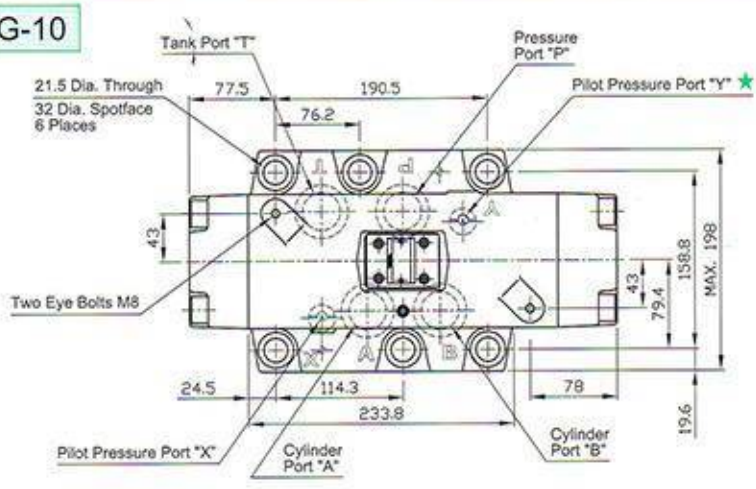

★In case of Spring Offset model (2B※)
It functions as a drain port.
When the model is used, please connect it directly to the reservoir.

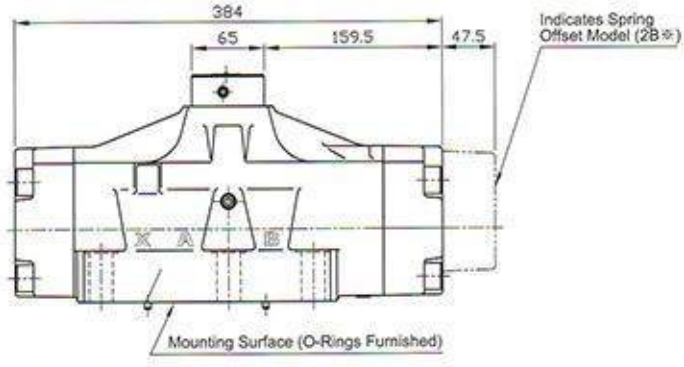

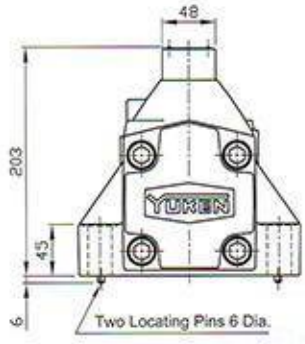

Note: For dimensions of mounting surface, please refer to DHGM-10 type sub-plate (page 98).

Options with Choke Valves

DHG-04-※※※-C2

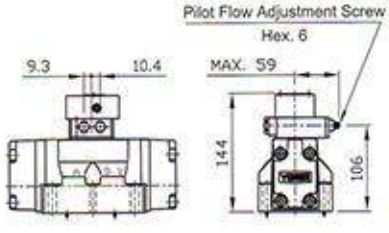

DHG-06-※※※-C2

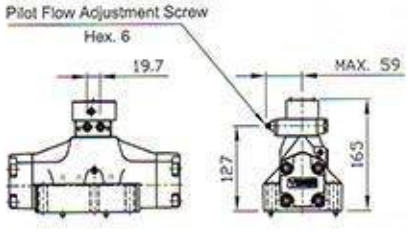

DHG-10-※※※-C2

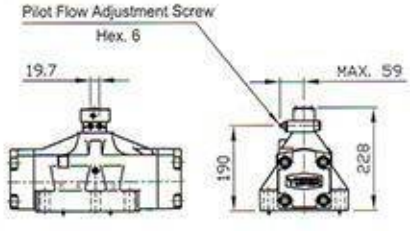

YUKEN
OIL HYDRAULIC EQUIPMENT

Manually Operated Directional Valves Max. Pressure 25 MPa

These valves may be used to manually shift the spool position and change the direction of oil flow.

Specifications

Valve Size	Model No.	Max. Flow L/min	Max. Pressure MPa (kgf/cm²)	Max. T-Line Back Pressure MPa (kgf/cm²)	Mass Kg.
3/8	DM※-03-2B※-50	100	25 (250)	16 (160)	DMT:5 DMG:4
	DM※-03-2D※-50				
	DM※-03-3C※-50				
	DM※-03-3D※-50				

D

Graphic Symbol

Spring Centered Models 3C※

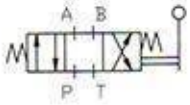

No-Spring Detented Models 3D※

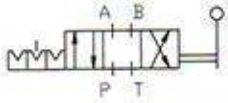

No-Spring Detented Models 2D※

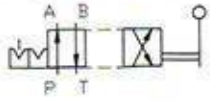

Spring Offset Models 2B※

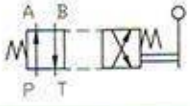

Model Number Designation

DM T-03-3C2-50

- Series Number
- Type of Connection
  T:Threaded Connection
  G:Sub-plate Mounting
- Valve Size: 03
- Valve Type
  Please refer to left graphic Symbol and page 82.
- Design Number

Note: For other valve types, please contect our sales engineers.

Sub-plates

Valve Model No.	Sub-plate Model No.	Piping Size Rc	Mass kg
DMG-03	DSGM-03-40	3/8	3
	DSGM-03X-40	1/2	
	DSGM-03Y-40	3/4	4.7

Mounting Bolts (Attachment)

Model No.	Socket Head Cap Screw	Q'ty	Tightening Torque N•m
DMG-03	M6 x 35 Lg	4	12~15

DMT-03 How to change lever position

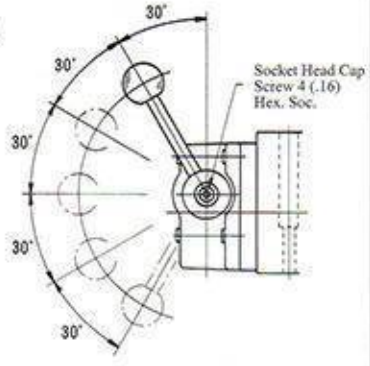

The lever position can be changed to any position in five different positions shown on the sketch in the right. For the lever position change, remove the Soc. Hd. Cap Screw and lever, set the lever at the required position and tighten it with Soc. Hd. Cap Screw firmly.

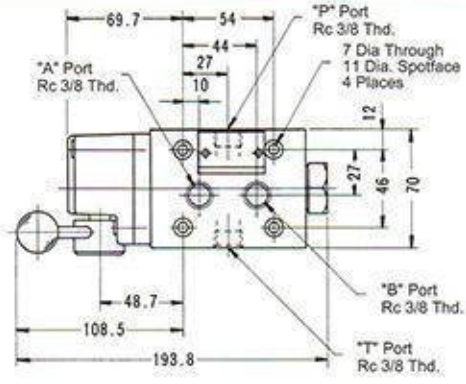

※ Lever Operating Torque
Not exceeding 30 N•m (3.06 kgf-m)

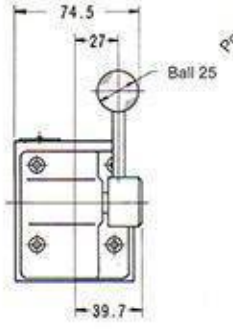

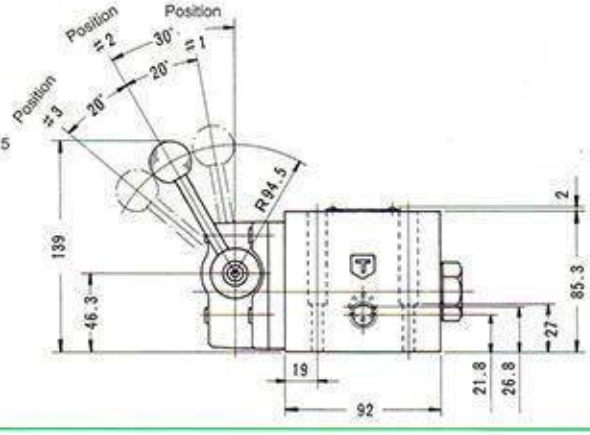

Manually Operated Directional Valves Max. Pressure 25 MPa

D

Mounting Surface:ISO 4401-AC-05-4-A

DMG-03

★1.The position of operating the lever can be changed as required. For the details, please see the DMT-03 in the previous page.

★2.Max. torque of operating the lever: 30 N•m (3.06 kgf . m)

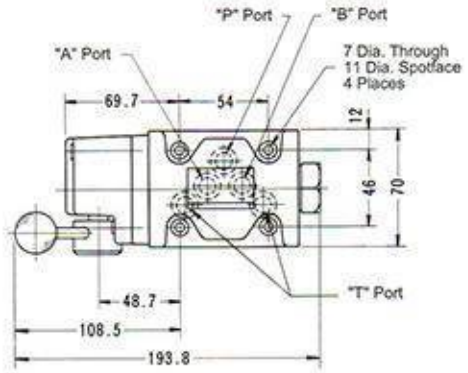

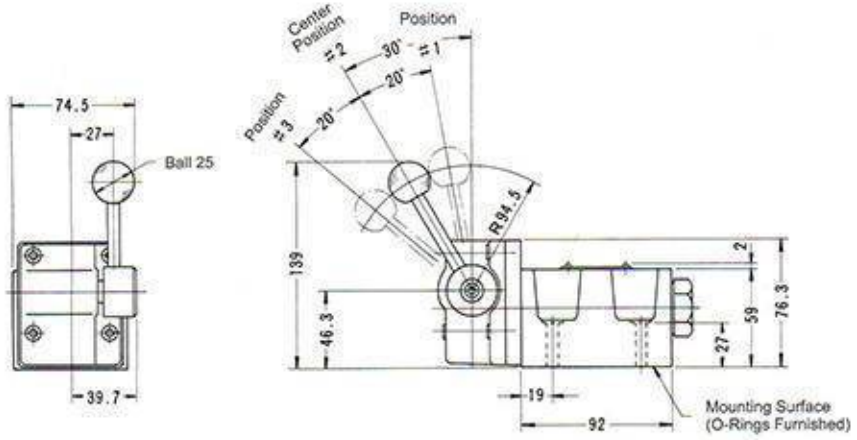

Note: For dimensions of mounting surface, please refer to the dimensional drawing of the sharable sub-plate (page 91).

YUKEN
OIL HYDRAULIC EQUIPMENT

Manually Operated Directional Valves Max. Pressure 25 MPa

These valves may be used to shift the direction of oil flow by depressing the spool by way of a cam.

Specications

Valve Size	Model No	Max. Flow L/min	Max. Pressure MPa (kgf/cm²)	Max. T-Line Back Press. MPa (kgf/cm²)	Mass kg
1/8	DCT-01-2B※-40	30	21 (210)	7.0 (70)	1.1
	DCG-01-2B※-40				
3/8	DCT-03-2B※-50	100	25 (250)	10.0 (100)	4.5
	DCG-03-2B※-50				3.8

Model Number Designation

DC T-01-2B2-R-※

- Series Number
- Type of Connection
  T:Threaded Connection
  G:Sub-plate Mounting
- Valve Size: 01, 03
- Valve Type (Please see the table above)
- Roller Position (Pleas see the drawing below)
- Design Number

Valve Type Note: 01 and 03 graphic symbols are different.

Valve Type	2B2	2B3	2B8*
DCG DCT -01	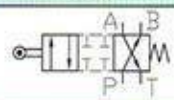	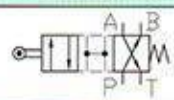	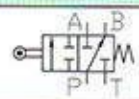
DCG DCT - 03	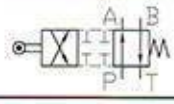	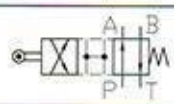	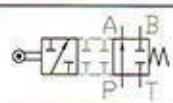

*Valve type 2B8, Tank port "T" functions as a drain port. Please connect it directly to the reservoir (Max. allowable T-line back pressure 0.35 MPa)

Roller Position

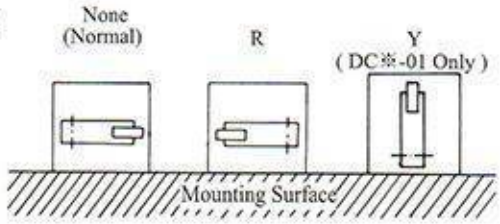

Mounting Bolts (Attachment)

Model No.	Socket Head Cap Screw	Q'ty	Tightening Torque N•m (kgf•m)
DCT-01	M5 x 45 Lg	2	5~7 (0.5~0.7)
DCG-01	M5 x 45 Lg	4	
DCG-03	M6 x 35 Lg	4	12~15 (1.2~1.5)

※DCT-03 Type is without mounting bolts.

Sub-plate

Valve Model No.	Sub-plate Model No.	Piping Size Rc	Mass kg
DCG-01	DSGM-01-30	1/8	0.8
	DSGM-01X-30	1/4	
	DSGM-01Y-30	3/8	
DCG-03	DSGM-03-40	3/8	3
	DSGM-03X-40	1/2	3
	DSGM-03Y-40	3/4	4.7

- When ordering sub-plate, please specify sub-plate model no. from the table above.
- Please refer to page 88 (DSGM-01) and page 91 (DSGM-03) for dimensions.

Mechanically Operated Directional Valves Max. Pressure 25 MPa

D

DCT-01

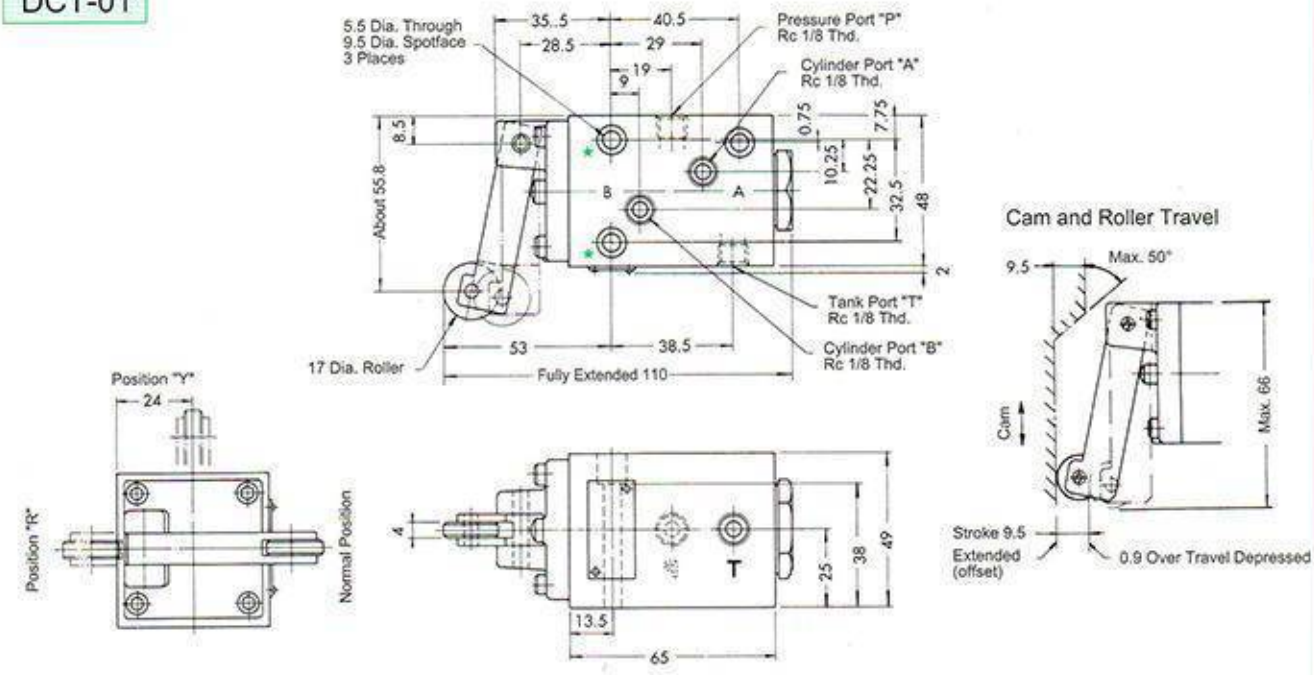

Note: When mounting the valve, be sure to use the two mounting holes marked with. ★

DCT-03

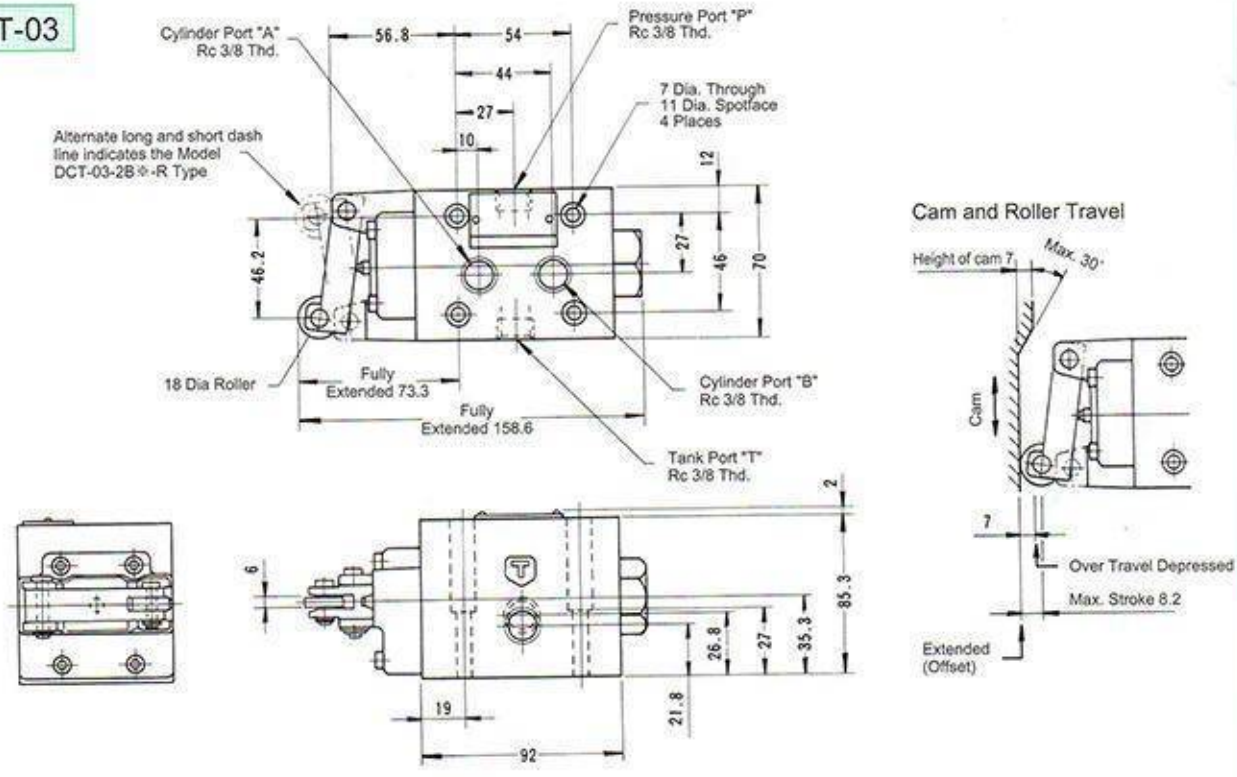

Mechanically Operated Directional Valves Max. Pressure 25 MPa

DCG-01

Mounting Surface:ISO 4401-AB-03-4-A

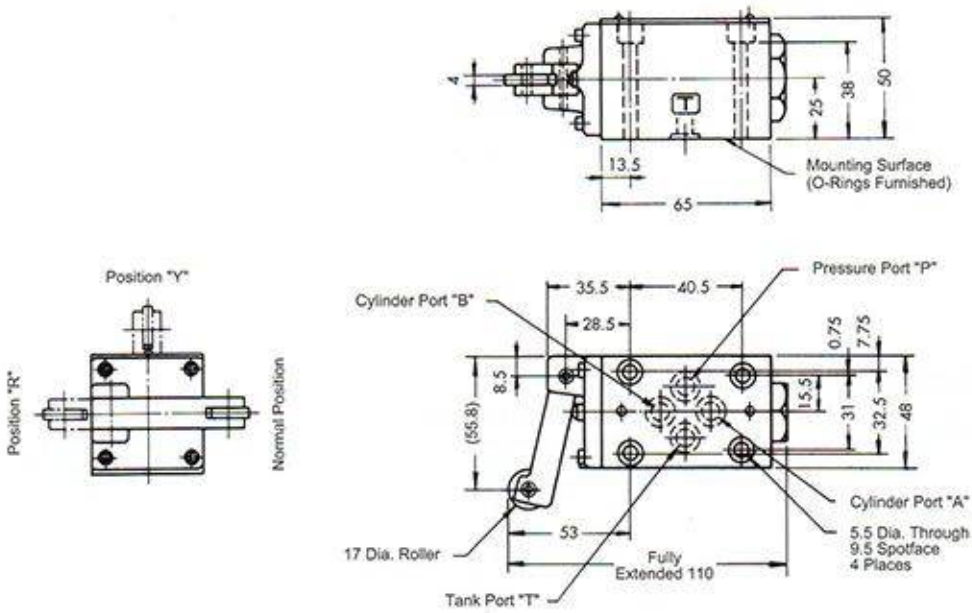

Note:1. For the cam and roller travel, please refer to DCT-01 in the previous page.
2. For the valve's mounting surface dimensions, please refer to DSGM-01 type sub-plate (page 88).

DCG-03

Mounting Surface:ISO 4401-AC-05-4-A-80

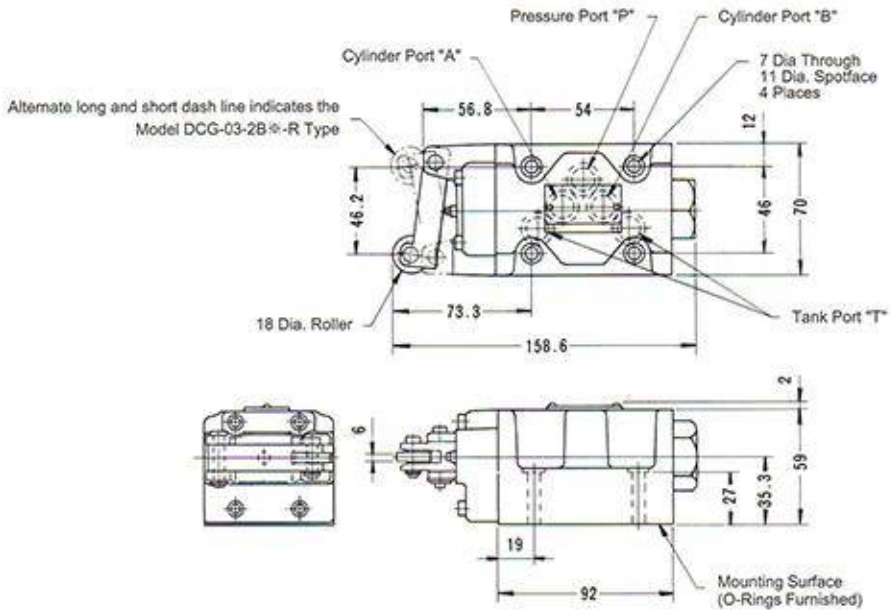

Note:1. For the cam and roller travel, please refer to DCT-03 in the previous page.
2. For the valve's mounting surface dimensions, please refer to DSGM-03 type sub-plate (page 91).

Mechanically Operated Directional Valves with Monitoring Switch-DCGS

Max. Pressure 25 MPa

- The monitoring switch can monitor the spool shifting to make sure the safety door open or close correctly.
- The monitoring switch is secluded from the outside circumstance and will not be influenced by the pollution.
- Degree of protection is IP 65.
- It will not be interfered by the external magnetic field.

Specifications

Valve size	Model No.	Max. Flow L/min	Max. Pressure MPa	Max. T-Line Back Pressure MPa	Mass kg
1/8	DCGS-01-2B※-40	30	21	5	1.8
	DCTS-01-2B※-40				1.8
3/8	DCGS-03-2B※-50	100	25	5	3.4
	DCTS-03-2B※-50				4.7

Monitoring Switch Specification

Rated Voltage (V) ± 10%	Load available (A)	Life time (Cycle)
AC 125 AC 250 DC 24	0.08 ~ 0.2	3×10^6 (Operating frequency 30 cycle/min)

※ 1. Max. changeover frequency :60 cycle/min.
2. Ambient temperature: 0 ~ 70°C, under 60%RH.
3. When DC current controlled, please use surge absorber to control the circuit.

Mounting Switch Wiring Diagram

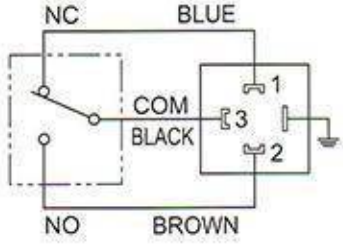

Model No. Note: 01 and 03 graphic symbols are different

Valve Type	2B2	2B3	2B8 ★
DCGS-01 DCTS-01		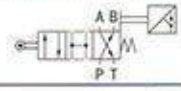	
DCGS-03 DCTS-03	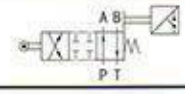	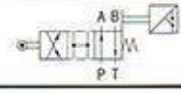	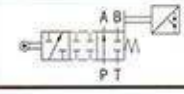

★2B8 Type: Tank port "T" functioned as a drain port and connect it directly to the reservoir. (Max. allowable T-line back pressure: 0.35 MPa)

Mounting Switch Movement Range

Item	Spool Position		
	Switching	Crossover	Returning
NO			
NC			

Model Number Designation

DCGS - 01- 2B2 - R - ※

- Series Number: DCGS:Sub-Plate Mounting; DCTS:Threaded Connection
- Valve Size:01, 03
- Valve Type: (Please See The above Table)
- Roller Position: (Please See The Below Table)
- Design Number

Mounting Bolts (Attachment)

Model No.	Socket Head Cap. Screw	Tightening Torque
DCGS-01	M5 x 45L 4 Pcs	5~7 N·m
DCTS-01	M5 x 45L 2 Pcs	
DCGS-03	M6 x 35L 4 Pcs	12~15 N·m

DCTS-03 type is without mounting bolts

Roller Position

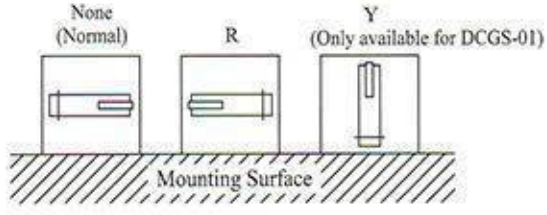

Mechanically Operated Directional Valves with Monitoring Switch-DCGS

Max. Pressure 25 MPa

DCGS-01

Mounting Surface:ISO 4401-AB-03-4-A

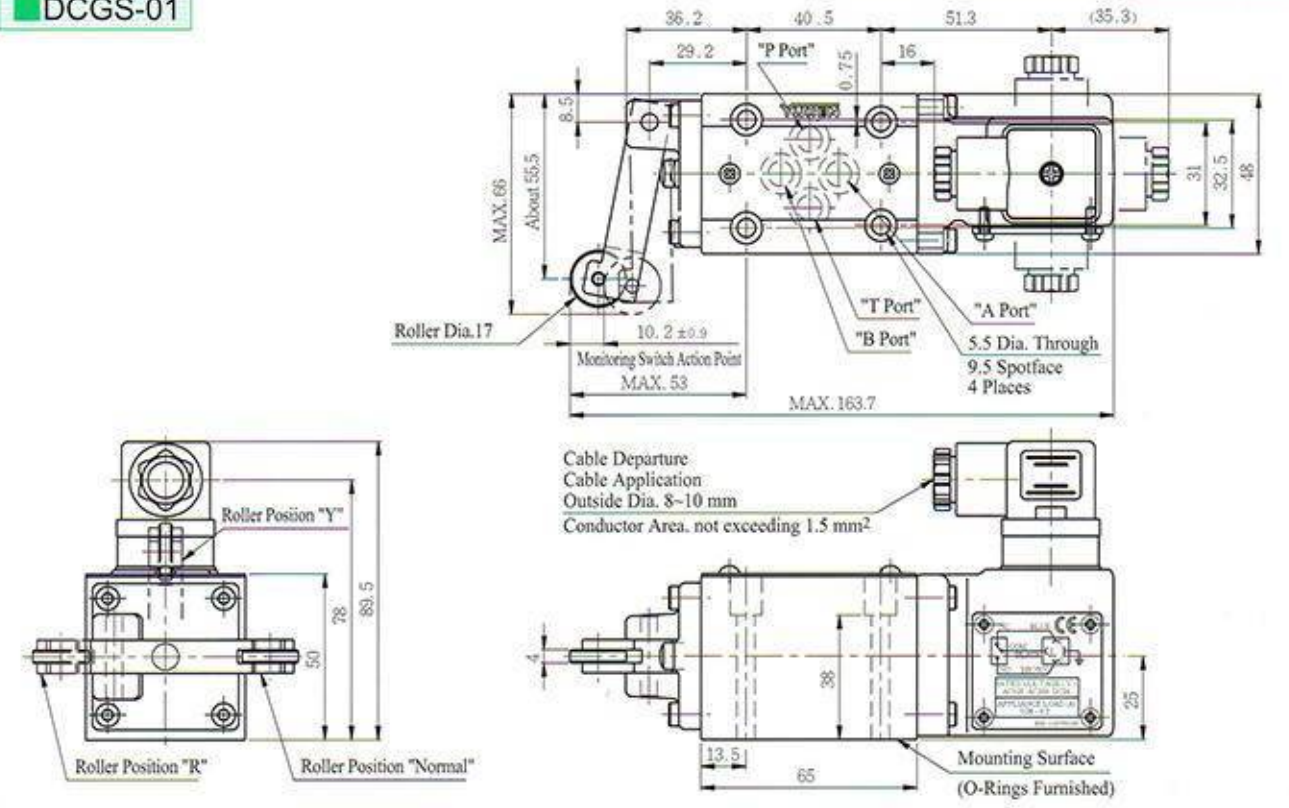

DCGS-03

Mounting Surface:ISO 4401-AC-05-4-A

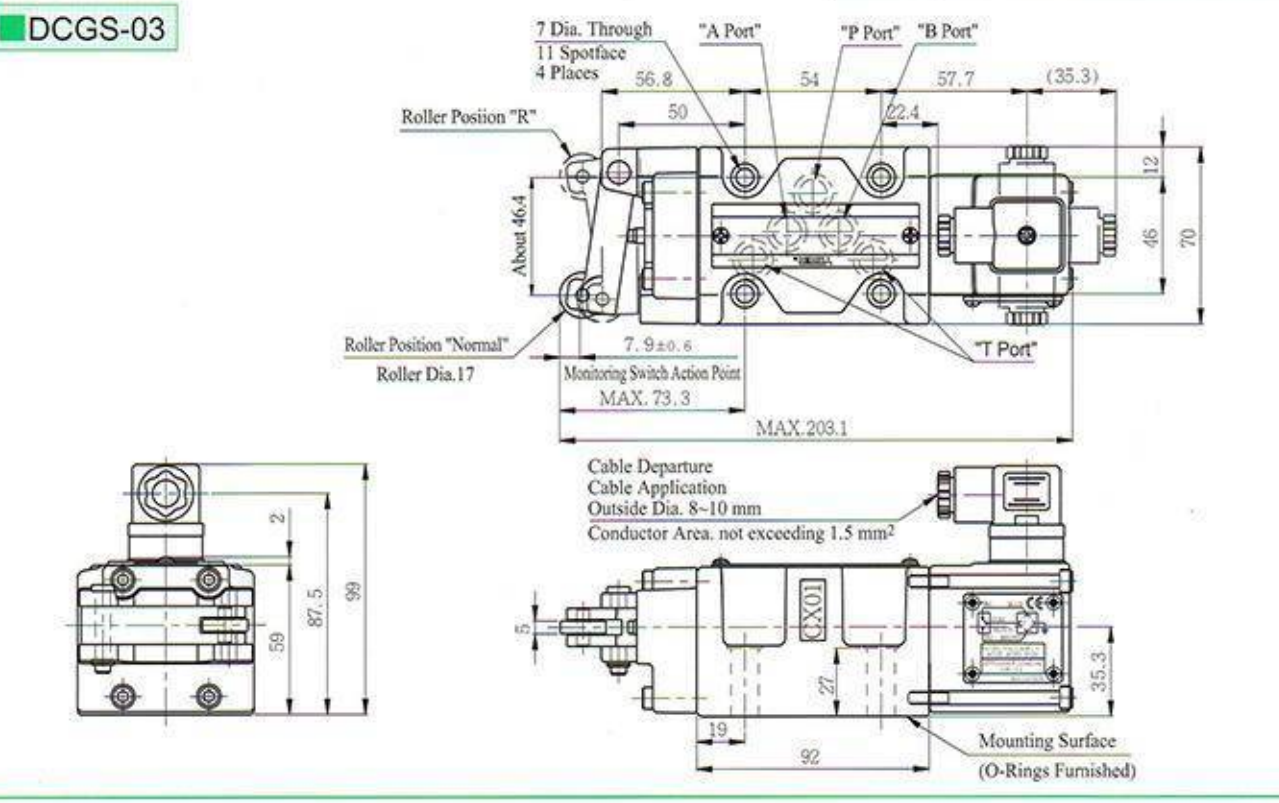

Mechanically Operated Directional Valves with Monitoring Switch-DCGS

Max. Pressure 25 MPa

D

DCTS-01

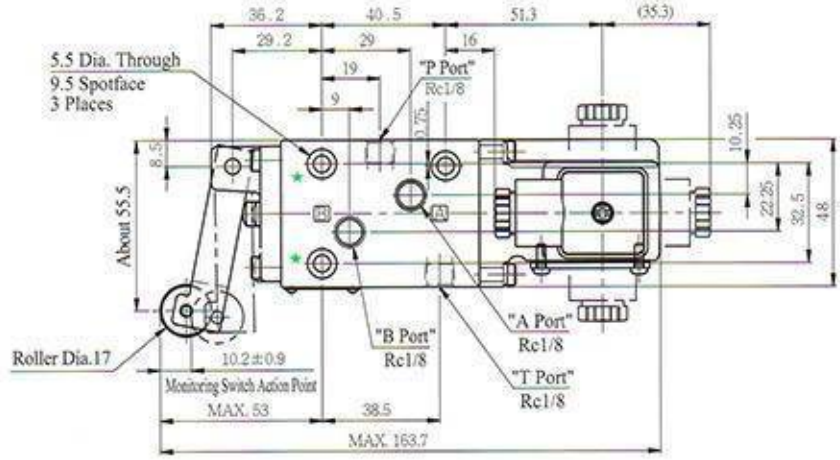

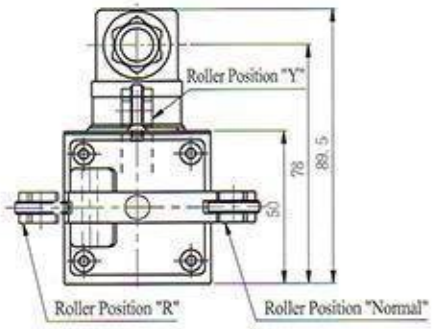

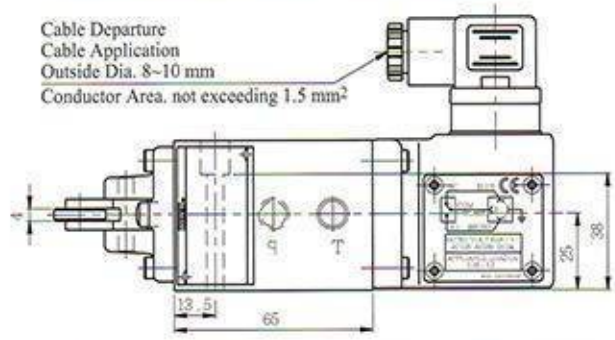

Note: When mounting the valve, make sure to use two mounting holes marked with ★

DCTS-03

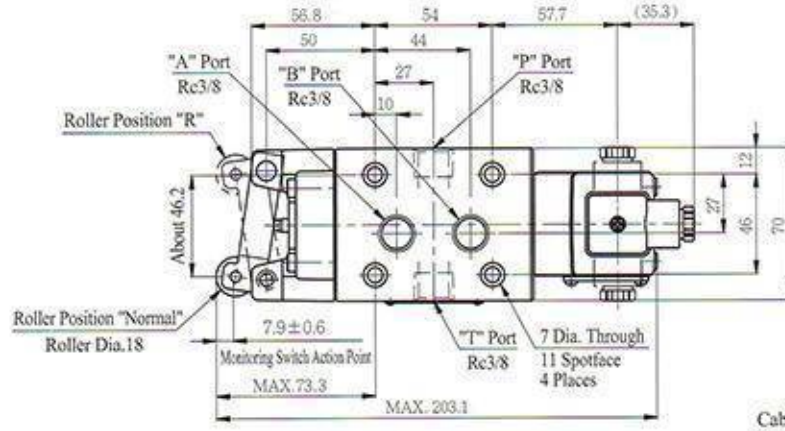

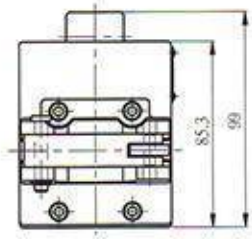

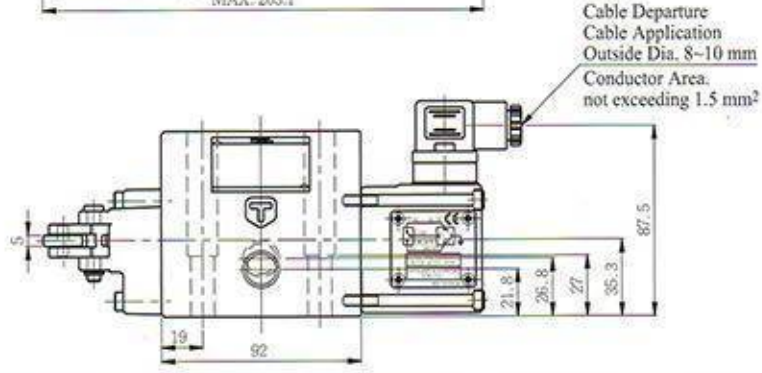

Logic Valve With Monitoring Switch

Max. Pressure 30 MPa

- The Limits Switch is connected to the poppet to monitor the open and close position of the logic valve
- Upon the poppet opening, we can sense the signal immediately.
- The poppet has the cushion function and low shocking of the shifting movement.
- Water-proof, Dust-proof IP 65

Model Number Designation

LDLS - 16 - 05 - X08 - P 1 - 20

Series No.
LDLS:
Logic valve with
Monitoring Switch

Valve Size
16. 25. 32. 40. 50

Cracking Pressure MPa (kgf/cm²)
None : Without spring
05 : 0.05 (0.5)
20 : 0.2 (2)
35 : 0.35 (3.5)

* Location of orifice X Pilot port
None : No orifice (standard)
X08 : Designation of orifice ø0.8
X10 : Designation of orifice ø1.0
X12 : Designation of orifice ø1.2
X14 : Designation of orifice ø1.4
X16 : Designation of orifice ø1.6
X18 : Designation of orifice ø1.8
X20 : Designation of orifice ø2.0
X25 : Designation of orifice ø2.5

Monitoring Switch Contact
P : PNP N.O. (Standard)
N : NPN N.O.

Monitoring Switch Connetor
1:N.O (Normal Open)
2:N.C (Normal Close)

Design No.

Specifications

Model No.	Rated Flow L/min	Cracking Pressure MPa (kgf/cm²)	Max. Operating Pressure MPa (kgf/cm²)	Mass (kg) With mounting Bolts
LDLS-16-※-20	130	**05 :** 0.05 (0.5)	30 (306)	2.1
LDLS-25-※-20	350			3.5
LDLS-32-※-20	500	**20 :** 0.2 (2)		5.0
LDLS-40-※-20	850	**35 :** 0.35 (3. 5)		9.0
LDLS-50-※-20	1400			14.1

Note : 1. Rated flow : at the valves of no spring type and the pressure drop of 0.3 MPa, .
2. The actual pressure drop please refer to the following page, flow vs pressure drop curve

Graphic Symbol

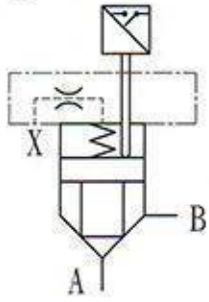

Mounting Switch Movement Range

		Logic Valve Poppet Position		
		Poppet Close	Cushion Position	Poppet Open
Monitoring Switch Movement	N.O. (Normal Open)			
	N.C. (Normal Close)			

Mounting Switch Wiring Diagram

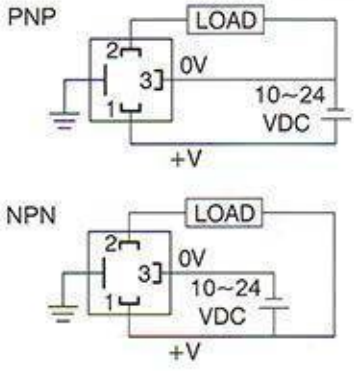

Mounting Bolts

Model No.	Socket Head Cap Screw	Q'ty	Tightening Torque N•m
LDLS-16	M8 x 50L	4	31 ~ 38
LDLS-25	M12 x 55L	4	104 ~ 127
LDLS-32	M16 x 60L	4	253 ~ 310
LDLS-40	M20 x 70L	4	493 ~ 603
LDLS-50	M20 x 90L	4	493 ~ 603

Monitoring Switch Specifications

Rated Voltage (V)	Load Available (A)
DC10-30V	MAX. 200 mA

Note : 1. Switching Frequency 1000HZ
2. Ambient Temperature Range -25~70°C
3. When DC current is controlled, please use surge absorber to control the circuit.

Logic Valve With Monitoring Switch

Max. Pressure 30 MPa

D

LDLS -※ Flow vs Pressure Drop Curve (ISO VG46 Oils, 50°C. Fluid Viscosity 35 cSt)

This pressure drop curve is based on non-spring type, if select the cracking pressure of 05, 20, 35, the pressure drop under the cracking pressure is as same as the cracking pressure

EX : LDLS-32-20-10, cracking pressure 0.2 MPa (2 kgf/cm²)

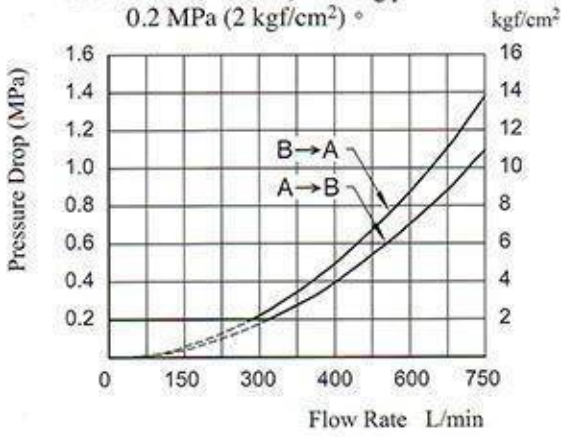

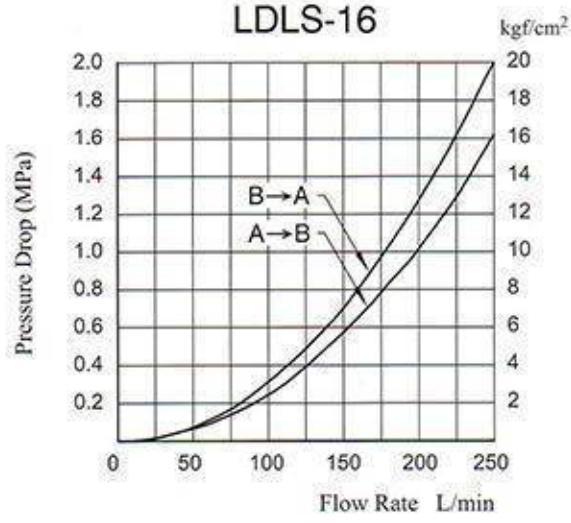

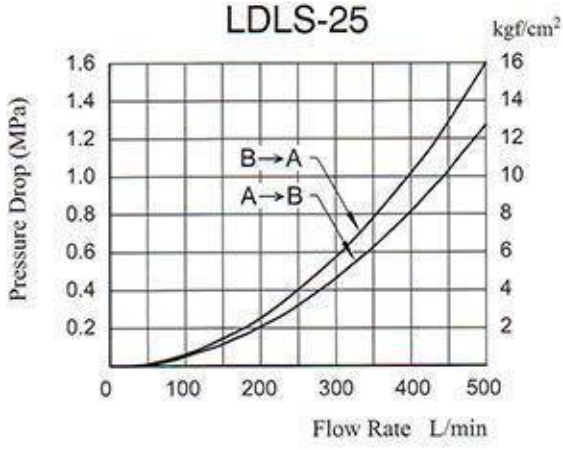

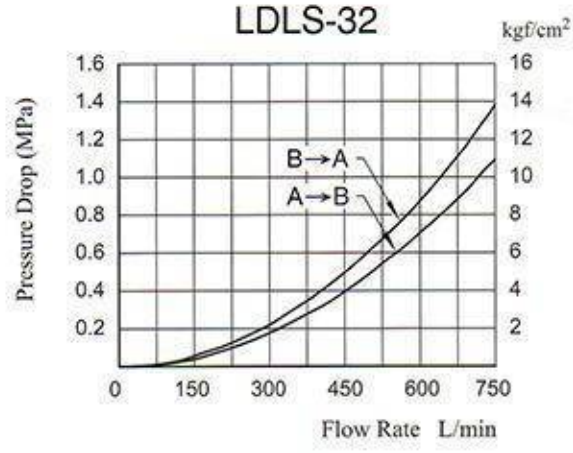

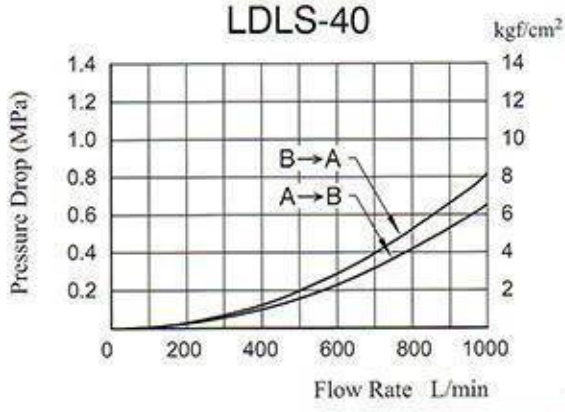

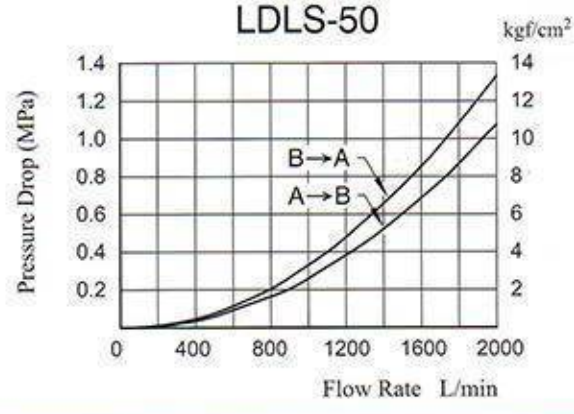

Logic Valve With Monitoring Switch

Max. Pressure 30 MPa

LDLS - ※ Dimensions

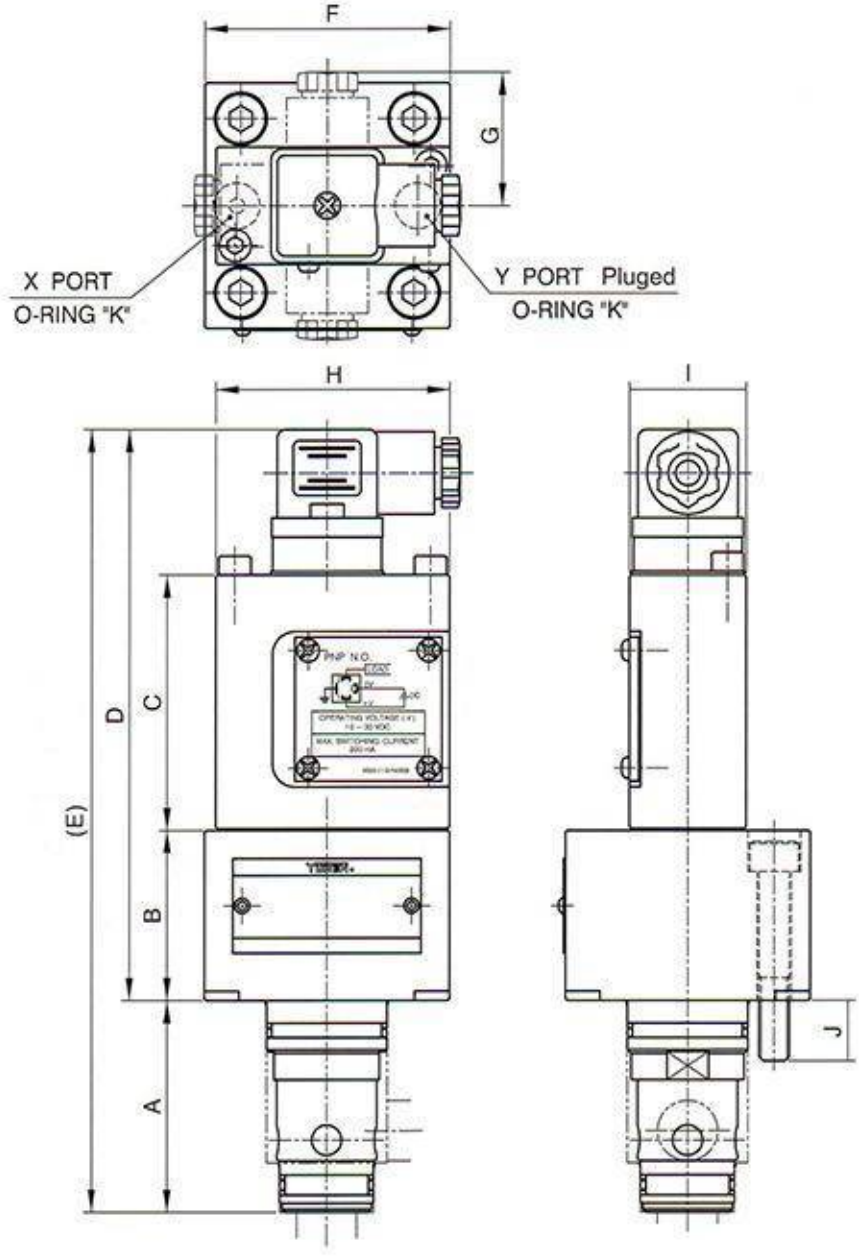

Model No.	A	B	C	D	E	F	G	H	I	J	K
LDLS-16	56	45	67.5	106	207	65	36	62	31	16	SO-NB-P9
LDLS-25	72	50		156	228	85				20	SO-NB-P9
LDLS-32	85	52		158	243	102				24	SO-NB-P11
LDLS-40	105	65		171	276	127				33	SO-NB-P14
LDLS-50	122	82		188	310	142				37	SO-NB-P14

Logic Valve With Monitoring Switch

Max. Pressure 30 MPa

D

LDLS -※ Mounting Dimensions

Model No.	A +1 +0	B ±0.2	C ±0.2	S ±0.2	E ±0.2	G	J	K
LDLS-16	65	47	46	23	1	M8	4	P9
LDLS-25	85	62	58	29	4	M12	6	P9
LDLS-32	102	76	70	35	6	M16	8	P11
LDLS-40	125	92.5	85	42.5	7.5	M20	10	P14
LDLS-50	140	108	100	50	8	M20	10	P14

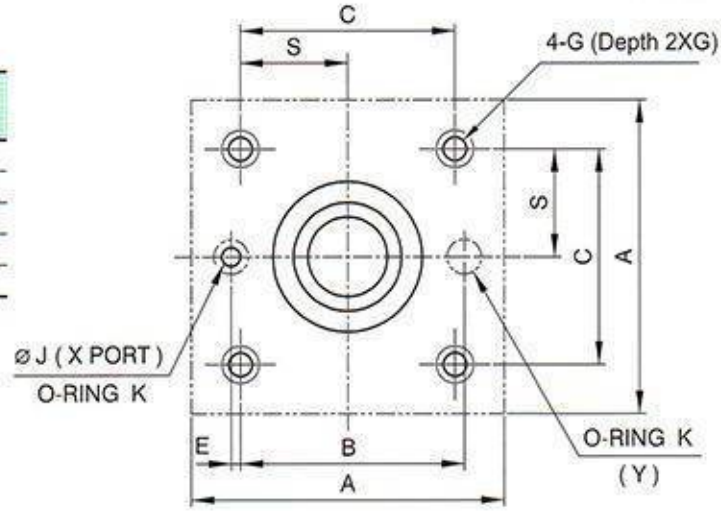

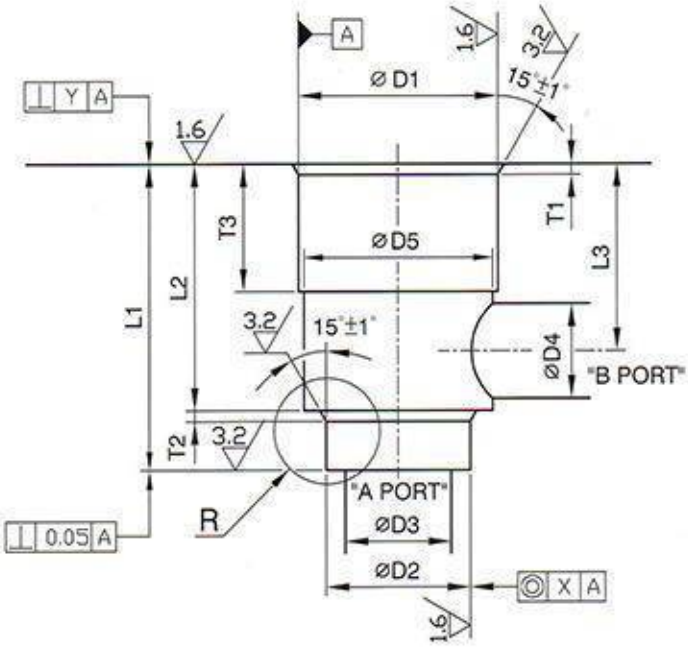

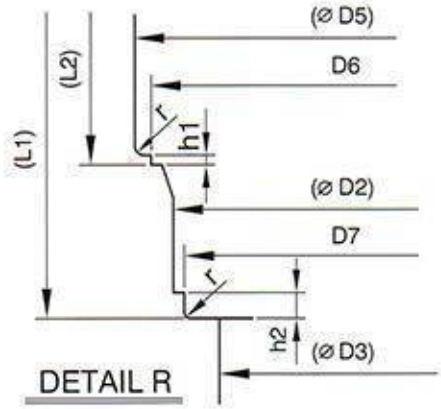

Model No.	L1 Base dimension	L1 Allowance	L2 Base dimension	L2 Allowance	L3 ±0.3
LDLS-16	56	+0.1 +0	43	+0.1 +0	34
LDLS-25	72		58		44
LDLS-32	85		70		52
LDLS-40	105		87		64
LDLS-50	122		100		72

Model No.	D1 Base dimension	D1 Allowance	D2 Base dimension	D2 Allowance	D3	D4	D5 Min.	D6	D7 Min.	T1	T2	T3 +0.5 +0	h1	h2	r Max.	X	Y
LDLS-16	32	+0.039 +0	25	+0.033 +0	16		31.5	28.5	24.6	2	2	20	0.2	2	0.8	0.03	0.05
LDLS-25	45		34	+0.039 +0	25		44.5	39.5	33.6	2.5	2.5	30					
LDLS-32	60	+0.046 +0	45		32		59.5	52.5	44.6	2.5	2.5	30					0.1
LDLS-40	75		55	+0.046 +0	40		74	65	54.6	3	3	30	0.3	3		0.05	
LDLS-50	90	+0.054 +0	68		50		89	75	67.6	3	3	35		5			

YUKEN
OIL HYDRAULIC EQUIPMENT

Check Valves

Max. Pressure 21 MPa

CIT Type

CRG Type

These valves allow free flow in one direction and prevent flow in the reverse direction. Cracking pressure specified is the pressure required to open the valve and allow free flow.

Specifications

Valve Size	Model No. Threaded Connection	Model No. Sub-plate Mounting	Rated Flow L/min	Cracking Pressure MPa (kgf/cm²)	Mass kg Threaded Connection	Mass kg Sub-plate Mounting
3/8	CIT-03-※-30T	-	30	0.05 (0.5) 0.2 (2) 0.35 (3.5) 0.50 (5)	0.18	-
3/4	CIT-06-※-30T	-	80		0.65	-
1-1/4	CIT-10-※-30T	-	200		2.1	-
3/8	CRT-03-※-31	CRG-03-※-30	30	0.035 (0.35) 0.2 (2) 0.35 (3.5) 0.5 (5)	0.8	2.3
3/4	CRT-06-※-31	CRG-06-※-30	100		1.6	4.1
1-1/4	CRT-10-※-30	CRG-10-※-30	250		5.5	7.8

* There is 50T design for CRG series, that is ISO 5781 mounting dimension, Please contact our sales people for details.

D

Model Number Designation

CI T-03-05-30T

- Series Number: CI:In-Line Check Valve
- Type of Connection: T:Threaded Connection
- Valve Size: 03, 06, 10
- Cracking Pressure CIT: 05 : 0.05 Mpa; 20 : 0.20 Mpa; 35 : 0.35 Mpa; 50 : 0.50 Mpa
- Design Number

CR T-03-5-※

- Series Number: CR:Right Angle Check Valve
- Type of Connection: T:Threaded Connection; G:Sub-plate Mounting
- Valve Size
- Cracking Pressure CRG: 05 : 0.035 Mpa; 30 : 0.20 Mpa; 50 : 0.35 Mpa; 75 : 0.50 Mpa
- Design Number

Graphic Symbol

Sub-plate

Valve Model No.	Sub-plate Model No.	Piping Size Rc	Mass kg
CRG-03	CRGM-03-30	Rc 3/8	0.9
CRG-06	CRGM-06-30	Rc 3/4	2.7
CRG-10	CRGM-10-30	Rc 1-1/4	6.6

Sub-plates are available. When ordering, please specify sub-plate model no. from the table above. For dimension of the sub-plate. Please see page 114.

Mounting Bolts (Attachment)

Model No.	Socket Head Cap Screw	Q'ty	Tightening Torque N·m
CRG-03	M10 x 60Lg	4	60 ~ 74
CRG-06	M16 x 60Lg	4	253 ~ 310
CRG-10	M20 x 75Lg	4	493 ~ 603

CIT-03, 06, 10

⇦ Free Flow Direction

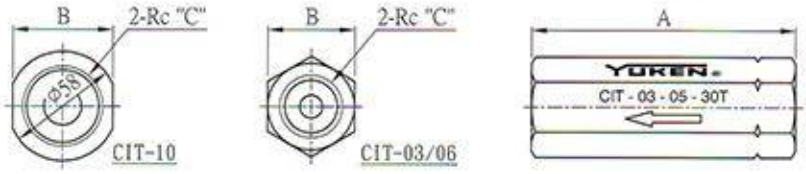

Model No.	A	B	C
CIT-03	70	23	3/8
CIT-06	90	35	3/4
CIT-10	133	53	1-1/4

CRT-03, 06, 10

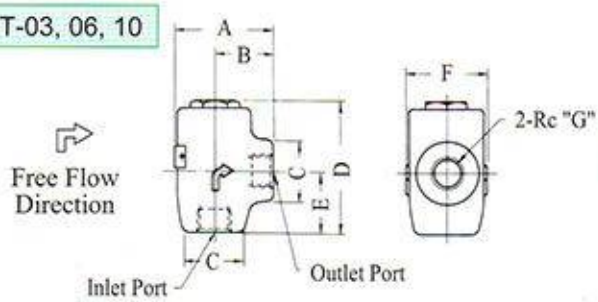

Model No.	A	B	C	D	E	F	G
CRT-03	59	36	ø36	78	33	47	3/8
CRT-06	74.5	47	ø45	106	51	57	3/4
CRT-10	105	65	ø80	126	62	83	1-1/4

Check Valves

Max. Pressure 21 MPa

D

CRG-03, 06, 10

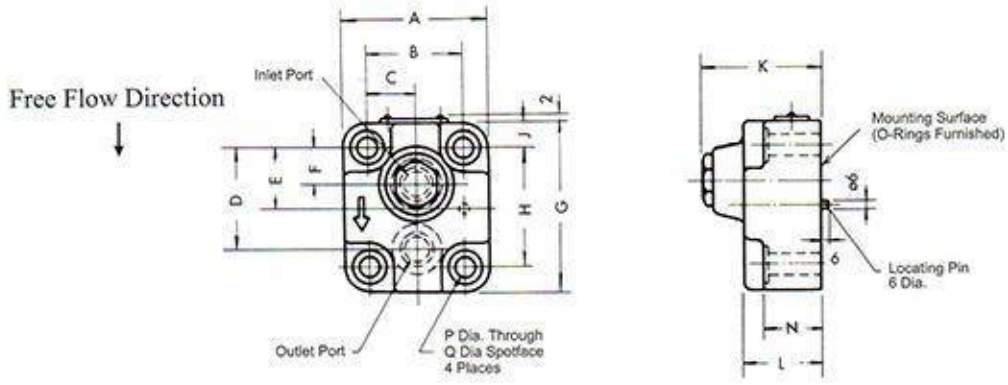

Model No.	A	B	C	D	E	F	G	H	J	K	L	N	P	Q
CRG-03	68	47.6	23.8	47.6	30.1	12.7	80	60.3	10	72	55	46	11	17.5
CRG-06	98	65.1	32.6	68.2	40.5	22.2	114	80.9	16.5	81	53	38	17.5	26
CRG-10	130	92.1	46.1	71.4	46	20.6	130	92.1	19	96	65	47	21.5	32

Note:For dimensions of valve's mounting surface, please refer to the diagram below.

Sub-plate

CRGM-03-30

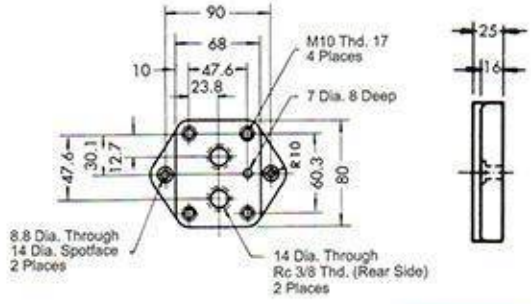

CRGM-06-30

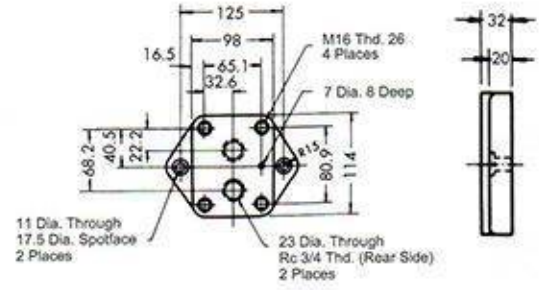

CRGM-10-30

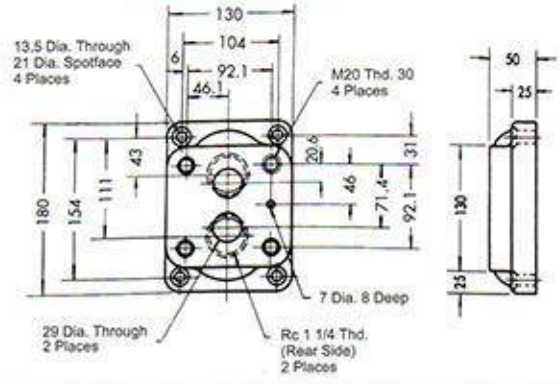

YUKEN
OIL HYDRAULIC EQUIPMENT

Pilot Controlled Check Valves

Max. Pressure 25 MPa

These check valves allow free flow in one direction and prevent reverse flow in the reverse direction until operated by a pilot pressure to allow free reverse flow. The specified cracking pressure is required to open the valve to allow free flow direction.

D

Specifications

Valve Size	Model No.		Rated Flow L/min	Cracking Pressure MPa (kgf/cm²)	Mass kg	
	Threaded Connection	Sub-plate Mounting			Threaded	Sub-Plate
3/8	CP※T-03-※-※-20	CP※G-03-※-※-20	50	0.20 (2)	3.4	4.5
3/4	CP※T-06-※-※-20	CP※G-06-※-※-20	125	0.35 (3.5)	5.2	7
1-1/4	CP※T-10-※-※-20	CP※G-10-※-※-20	315	0.50 (5)	11.6	12

Graphic Symbol

Internal Drain Type

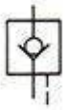

External Drain Type

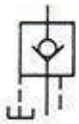

Model Number Designation

CPD T-03-E-50-20

Series Number
CP: Pilot Controlled Check Valve
CPD: Decompression Type Pilot Controlled Check Valve

Type of Connection
T: Threaded Connection
G: Sub-plate Mounting

Valve Size: 03, 06, 10

Drain Connection
None: Internal Drain
E: External Drain

Cracking Pressure
(please refer to upper table)
30: 0.20 MPa
50: 0.35 MPa
75: 0.50 MPa

Design Number

CPT -03, 06, 10
CPDT

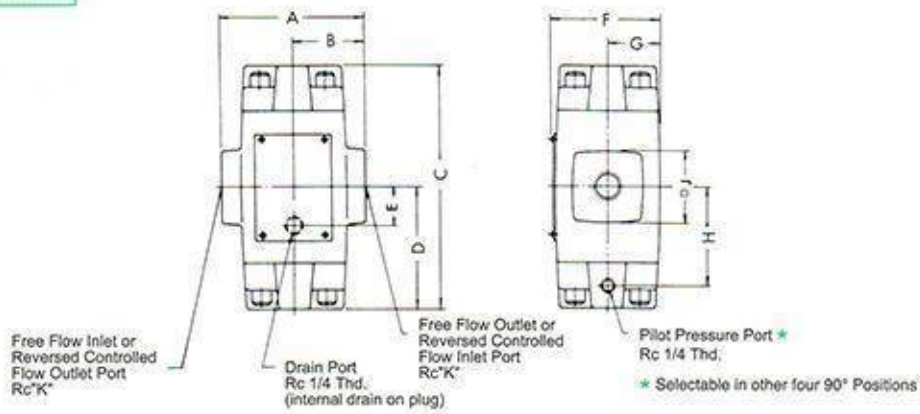

Model No.	A	B	C	D	E	F	G	H	J	K
CP※T-03	80	40	144	72	21	66	32	58	36	3/8
CP※T-06	96	48	168	84	26	78	38	70	60	3/4
CP※T-10	140	70	208	104	35	92	45	84	79	1-1/4

Pilot Controlled Check Valves

Max. Pressure 25 MPa

D

CPG / CPDG -03, 06

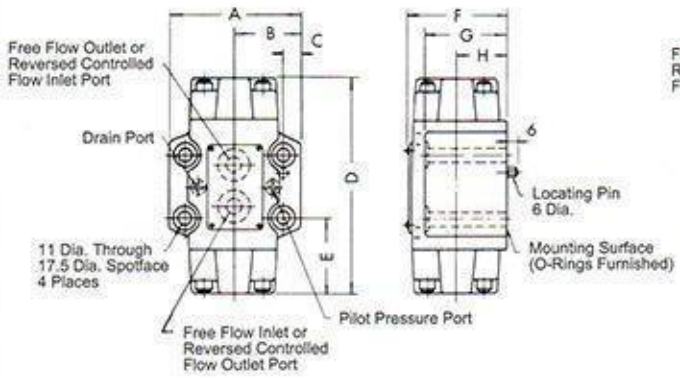

CPG / CPDG -10

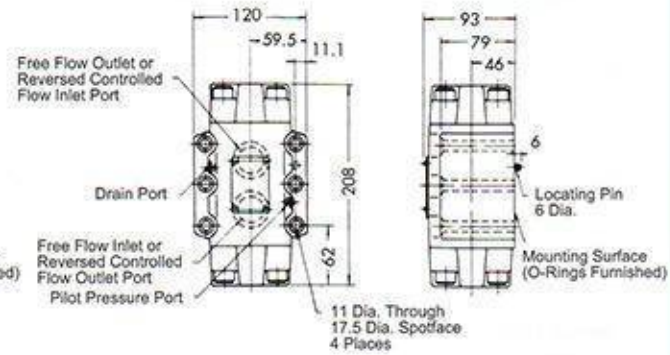

Model No.	A	B	C	D	E	F	G	H
CP※G-03	90	44.5	11.1	144	50.6	68	59	35
CP※G-06	102	51	11.3	168	54	80	69	40

Note: For dimensions of mounting surface, please refer to HGM type sub-plate (page 66).

Sub-plate

Valve Model no.	Sub-plate Model No.	Piping Size Rc	Mass kg
CPG -03 / CPDG -03	HGM-03-20	3/8	1.6
	HGM-03X-20	1/2	1.6
CPG -06 / CPDG -06	HGM-06-20	3/4	2.4
	HGM-06X-20	1	3.0
CPG -10 / CPDG -10	HGM-10-20	1-1/4	4.8
	HGM-10X-20	1-1/2	5.7

Sub-plates are available. When ordering, please specify sub-plate model no. from the table above. Please refer to page 66.

Mounting Bolts (Attachment)

Model No.	Socket Head Cap Screw	Q'ty.	Tightening Torque N•m
CP※G-03	M10 x 70 Lg	4	60 ~74
CP※G-06	M10 x 80 Lg	4	
CP※G-10	M10 x 90 Lg	6	

Poppet Type Directional Valves Max. Pressure 21 MPa

These valves are of poppet type structure, therefore, response time is quicker than that of spool type valves, moreover the valves have little internal leakage. (below 0.25cm³/min)

Graphic Symbol

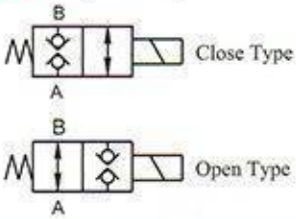

Specifications

Model Number	Max. T-Line Back Pressure MPa (kgf/cm²)	Max. Flow L/min	Mass kg
LVT-03-※-30	16 (160)	40	4.3
LVG-03-※-30			

Sub-plate

Valve Model No.	Piping Size Rc	Mass kg
LVGM-03-10	3/8	1.9
LVGM-03X-10	1/2	

Sub-plates are available. When ordering, please specify sub-plate model no. from the table above.

Model Number Designation

LV T-03-0-R220-N1-30

- Series Number
- Type of Connection: T:Threaded Connection, G:Sub-plate Mounting
- Valve Size
- O: Open Type. None: Close
- Coil Type★ R110,R220,D24
- Electrical Conduit Connection
- Design Number

★When used in AC electric source, please select R ※ type coils.
★The coil type is the same as that of the solenoid operated directional valve DSG-03.

Mounting Bolts (Attachment)

Model No.	Socket Head Cap Screw	Q'ty	Tightening Torque N•m
LVT-03	M6 x 35 Lg	2	12~15
LVG-03	M6 x 35 Lg	4	12~15

D

LVG-03

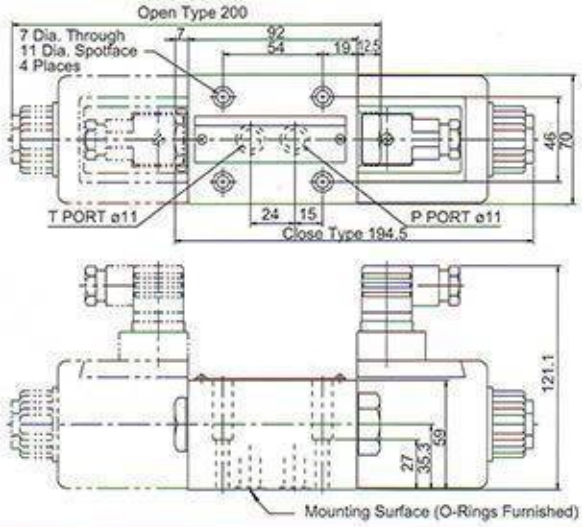

LVT-03

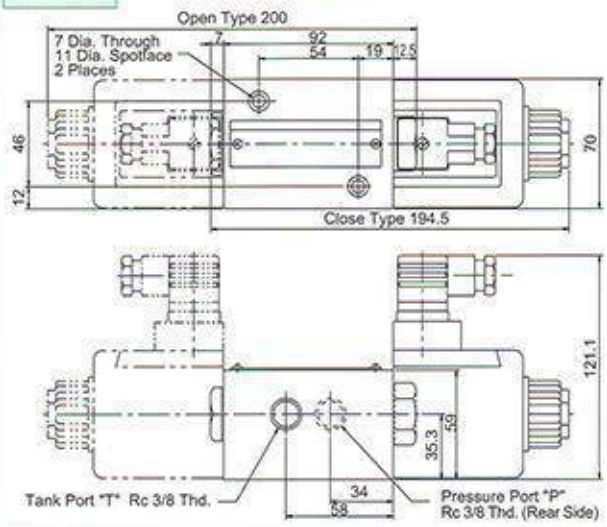

Sub-Plate LVGM-03, 03X-10

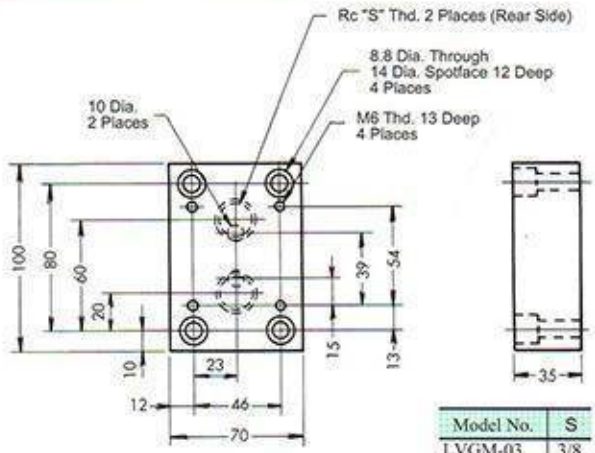

Model No.	S
LVGM-03	3/8
LVGM-03X	1/2

Prefill Valve

Max. Pressure 25 MPa

D

These valves are physically small, however, offer high flow rate without internal leakage. Before opening the valves, Please make sure to decompress the pressure first.

Specifications

1 MPa =10.2 kgf/cm²

Valve Size	Model Number	Max. Flow L/min	Cracking Pressure MPa	Mass kg
3	PF-80-※-20	400	0.012	8
3 1/2	PF-90-※-20	630	0.012	11.3
4	PF-100-※-20	1000	0.012	14.5
5	PF-125-※-20	1600	0.012	23
6	PF-150-※-20	2500	0.013	37

Note 1.To avoid possible shock, decompress the pressure in the cylinder line first before the valve operates, otherwise the valve does not perform well.
(The pilot pressure should be 4.5 times more higher than the main pressure)
Note 2.The pressure drop is about 0.3 MPa in the maximum flow rate on the table above.
Note 3.The pilot pressure should be kept below 14.0 MPa.
Note 4.The high pressure drop is not easy to happen in reality, selecting according to the calculation, 70% of the max. flow rate will be the best choice.

Graphic Symbol

Model Number Designation

PF-80-FT-20

- Design Number
- Series Number (Flange Connection)
- Valve Size
- Type of Pipe Flange
  - None:Without Pipe Flange
  - FP:P Port With Pipe Flange
  - FT:T Port With Pipe Flange(Standard)
  - FW:P Port & T Port With Pipe Flange

Mounting Bolts

Model No.	Socket Head Cap Screw	Q'ty	Tightening Torque N•m
PF-80	M16 x 55 Lg	6	253 ~ 310
PF-90	M18 x 65 Lg	6	352 ~ 431
PF-100	M20 x 70 Lg	6	493 ~ 603
PF-125	M20 x 80 Lg	12	
PF-150	M20 x 95 Lg	16	

Note: Use high tension bolts of which strength are 12.9T. No bolts and nuts are supplied in case the P and T pipe flanges are not ordered.

Flange's Mass / kg

Model Number	P Port with Pipe Flange	T Port with Pipe Flange
PF-80	6.6	2.2
PF-90	8.8	2.6
PF-100	14.2	2.6
PF-125	25.5	4
PF-150	28	8

PF-※-※-20

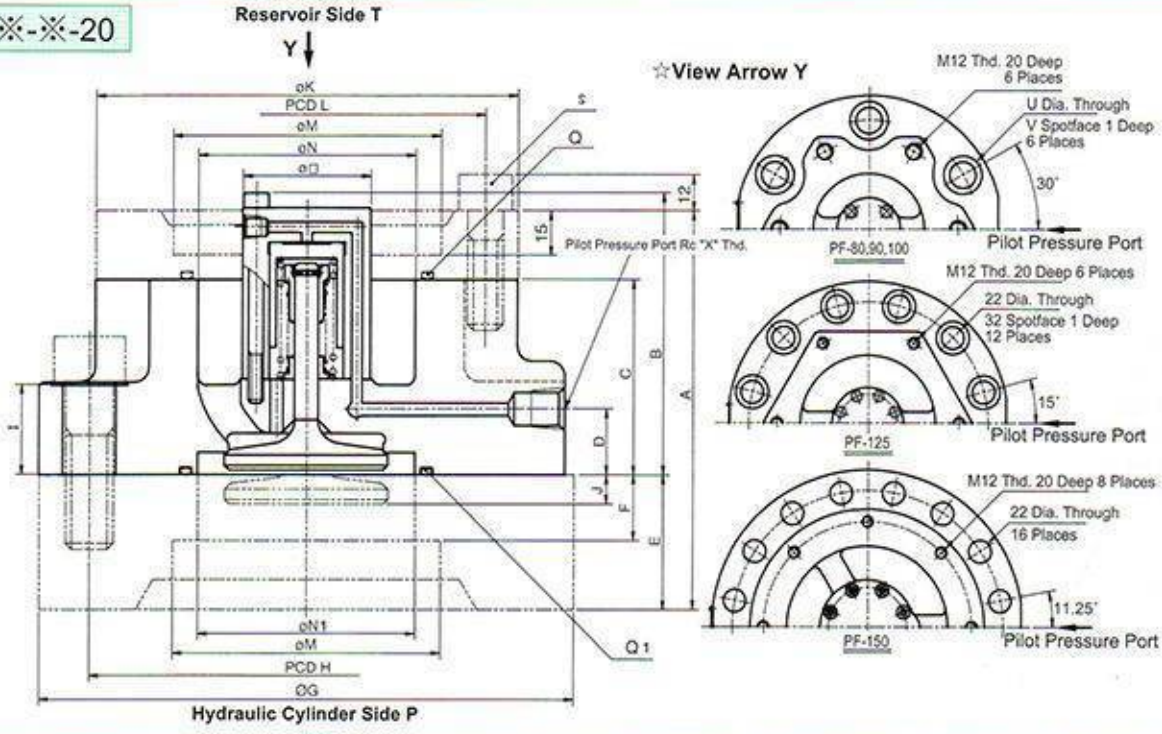

Model No.	Valve Size	A	B	C	D	E	F	G	H	I	J	K	L	M	N	N1	O	Q	Q1	S	U	V	X
PF-80	3	133	94	65	22	45	22	180	146	30	10	142	120	90.2	71	71	43	G80	G80	6-M12x40	18	26	Rc 1/4
PF-90	3 1/2	145	119	72	27	50	30	200	165	38	13	160	135	101.6	88	88	50	G100	G100	6-M12x40	20	29	Rc 1/4
PF-100	4	157	132.5	74	31.5	60	32	230	191	40	18	170	148	115.5	106	106	56	G115	G115	6-M12x40	22	32	Rc 1/4
PF-125	5	188	165	85	43	80	50	270	230	50	23.5	200	175	141.2	130	130	69	G140	G140	6-M12x40	22	-	Rc 1/4
PF-150	6	208	204	105	45	80	40	300	260	64	25	225	200	167	156	168	95	G170	G180	8-M12x40	22	-	Rc 3/8

YUKEN
OIL HYDRAULIC EQUIPMENT

Decompression Type Prefill Valve Max. Pressure 25 MPa

This valve is physically small, and easy to install , with high flow rate and little internal leakage: no need to install decompression valve and it can decompress pressure and open the valve at the same time. While decompressing , the min. cracking pressure is only 12~17% of the main cylinder.

D

Specifications

1 MPa =10.2 kgf/cm²

Valve Size	Model Number	Max. Flow L/min	Mass kg
3	PDF-80-※-※-20	400	8.1
3 1/2	PDF-90-※-※-20	630	11.4
4	PDF-100-※-※-20	1000	14.6
5	PDF-125-※-※-20	1600	23.2
6	PDF-150-※-※-20	2500	37.5

Note 1. While the Max. flow rate showed in the above table, the pressure drop is about 0.03 MPa.
Note 2. Regarding the pilot pressure, please refer the characteristics as follows.
Note 3. The high pressure drop is not easy to happen in reality, selecting according to the calculation, 70% of the max. flow rate will be the best choice.

Mounting Bolts

Model No.	Socket Head Cap Screw	Q'ty	Tightening Torque N•m
PDF-80	M16 x 55 Lg	6	253 ~ 310
PDF-90	M18 x 65 Lg	6	352 ~ 430
PDF-100	M20 x 70 Lg	6	493 ~ 603
PDF-125	M20 x 80 Lg	12	
PDF-150	M20 x 95 Lg	16	

*) Use high tension bolts of which strength are 12.9T.
*) No bolts and nuts are supplied in case the P and T pipe flanges are not ordered.

Graphic Symbol

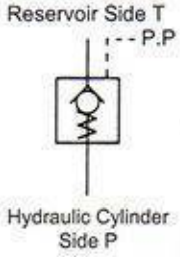

Model Number Designation

PDF-90-※-C※ V※-20

- Series Number (Flange Connection) PDF: Decompression Type Prefill Valve
- Valve Size
- Type of Pipe Flange
  None: Without Pipe Flange
  FP: P Port With Pipe Flange
  FT: T Port With Pipe Flange (Standard)
  FW: P Port & T Port With Pipe Flange
- Pilot Port Orifice
  None: Standard
  C10: ø1.0,
  C12: ø1.2
  C15: ø1.5
- Decompression valve restricted flow hole (mm)
  None: Standard
  V20: ø2.0, V30: ø3.0,
  V40: ø4.0, V50: ø5.0,
  V60: ø6.0,
- Design Number

Flange's Mass / kg

Model Number	Flange's Mass / kg	
	P Port with Pipe Flange	T Port with Pipe Flange
PDF-80-※-20	6.6	2.2
PDF-90-※-20	8.8	2.6
PDF-100-※-20	14.2	2.6
PDF-125-※-20	25.5	4
PDF-150-※-20	28	8

Min. Pilot Pressure While Decompressing

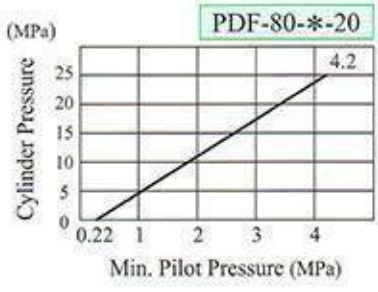

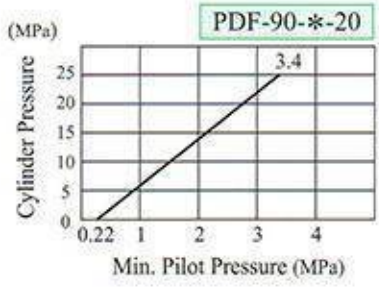

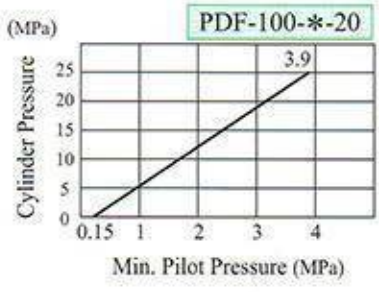

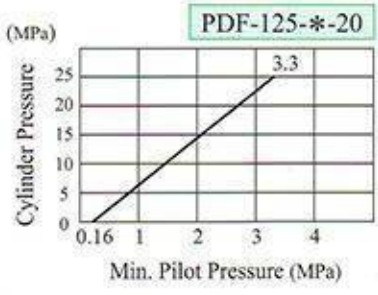

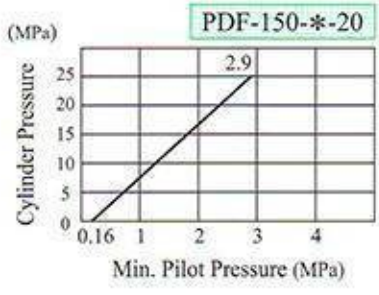

Decompression Type Prefill Valve

Max. Pressure 25 MPa

D

PDF-80/90/100/125/150-※-20

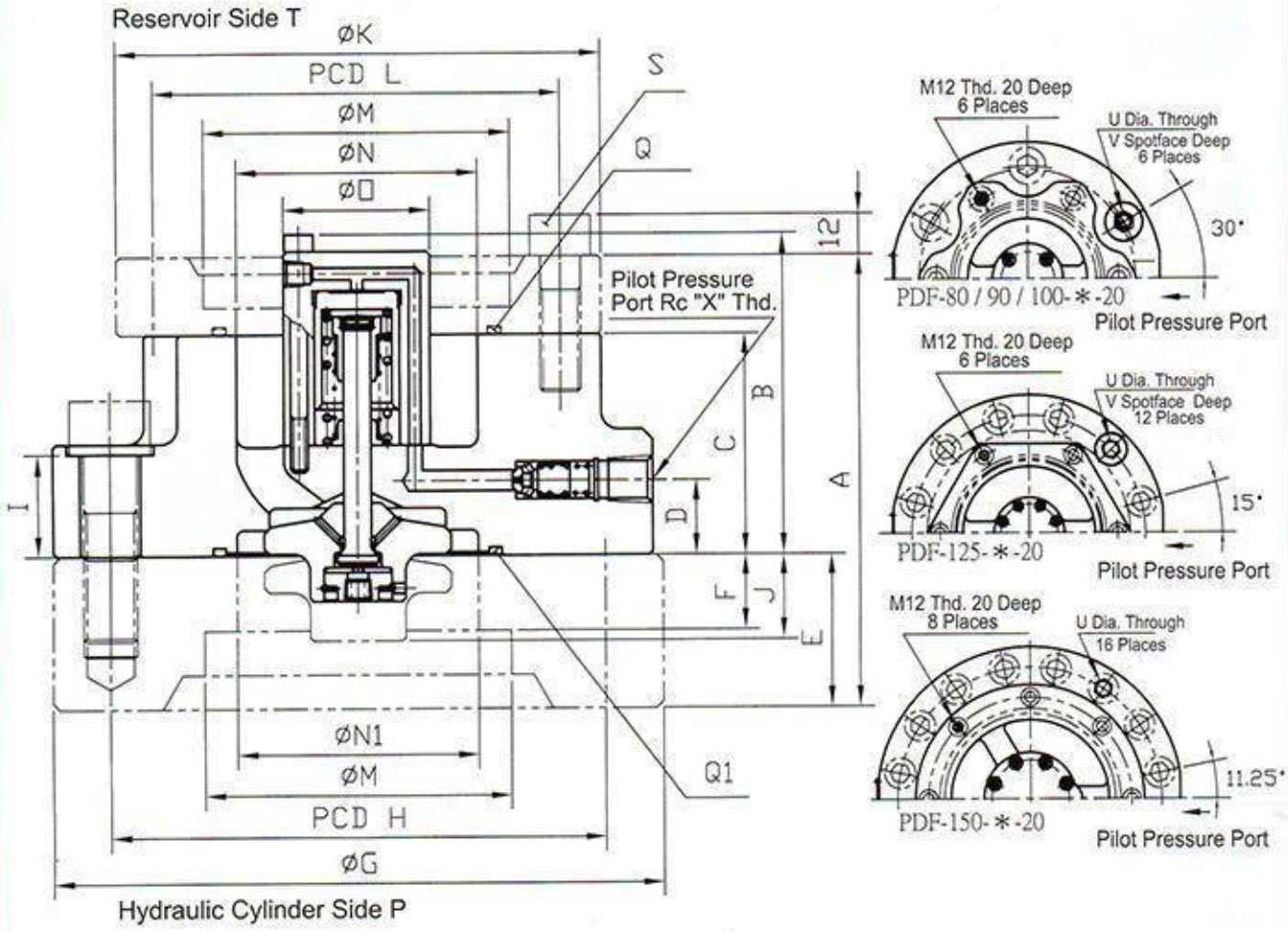

Modeel No.	Valve Size	A	B	C	D	E	F	G	H	I	J	K	L	M	N	N1	O	Q	Q1	S	U	V	X
PDF-80	3	133	94	65	22	45	22	180	146	30	10	142	120	90.2	71	71	43	G80	G80	6-M12x40	18	26	Rc 1/4
PDF-90	3 1/2	145	119	72	27	50	30	200	165	38	13	160	135	101.6	88	88	50	G100	G100	6-M12x40	20	29	Rc 1/4
PDF-100	4	157	132.5	74	31.5	60	32	230	191	40	18	170	148	115.5	106	106	56	G115	G115	6-M12x40	22	32	Rc 1/4
PDF-125	5	188	165	85	43	80	50	270	230	50	23.5	200	175	141.2	130	130	69	G140	G140	6-M12x40	22	32	Rc 1/4
PDF-150	6	208	204	105	45	80	40	300	260	64	25	225	200	167	156	168	95	G170	G180	8-M12x40	22	-	Rc 3/8

4ManPro

Elements For Manufacturing Processes

YUKEN

YUKEN HYDRAULICS (TW) CO., LTD

E

PROPORTIONAL CONTROLS ELECTRO-HYDRAULIC

Prefill Valve

Max. Pressure 25 MPa

This valve is small and easy to install; high flow and less internal drain. Before operating the valve, you have to unload pressure first. This valve is two-way shift not spring-returned type. Please refer the circuit as follows.

Specifications

1 MPa =10.2 kgf/cm²

Valve Size	Model Number	Max. Flow L/min	Max Pilot Pressure MPa (kgf/cm²)	Main Valve and Pilot Valve Square Measure Ratio	Mass without flange kg
8	PF-200-※-20T211	4000	10 (100)	5.1:1	110
12	PF-300-※-20T211	7000	10 (100)	5.1:1	160

Note 1.To avoid possible shock, decompress the pressure in the cylinder line first before the valve operates,otherwise the valve does not perform well.(The pilot pressure should be 4.5 times more higher than the main pressure)
Note 2.The pressure drop is about 0.03 MPa in the maximunflow rate on the tableabove.
Note 3.The high pressure drop is not easy to happen in reality, selecting according to the calculation, 70% of the max. flow rate will be the best choice.

E

Graphic Symbol

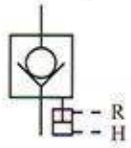

Mounting Bolts

Model No.	Socket Head Cap Screw	Q'ty	Tightening Tqruue N•m
PF-200	M30x120 Lg	16	1420-1735
PF-300	M30x130 Lg	20	

Model Number Designation

PF-200-FT-20T211

- Series Number (Flange Connection) — Valve Size
  - 200 : 8" pipe
  - 300 : 12" pipe
- Type of Pipe Flange
  - None: Without Pipe Flange
  - FP:P Port With Pipe Flange
  - FT:T Port With Pipe Flange(Standard)
  - FW:P Port & T Port With Pipe Flange
- Design Number

Sample Circuit

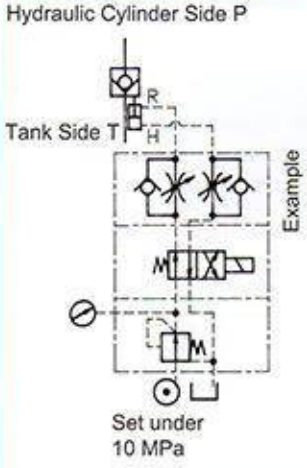

PF-200

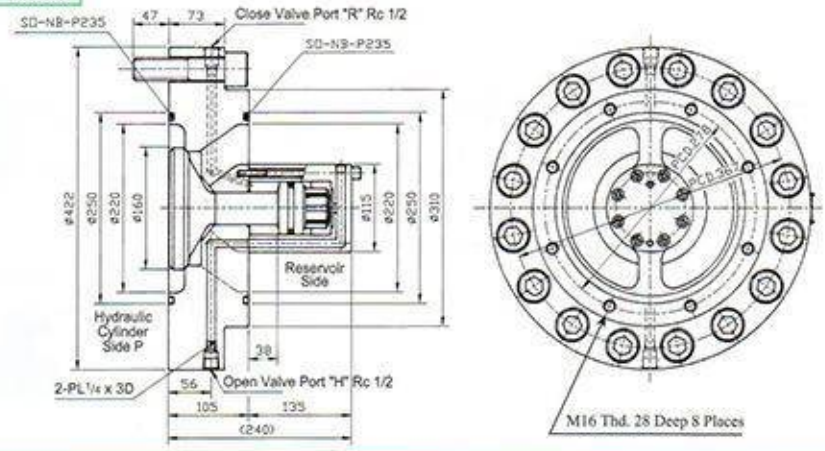

PF-300

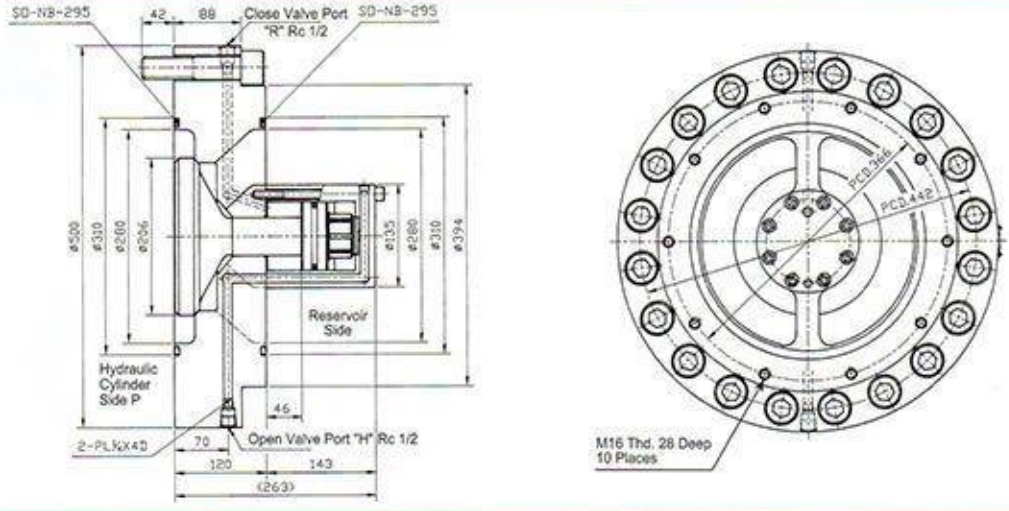

Proportional Electro-Hydraulic Control Valves

E

E Series to connect Electronics and Oil Hydraulics

- These valves are capable of varying pressure and flow rate in oil hydraulic circuits continuously by means of electrical setting. Unlike conventional multistage pressure or flow control system in which two or more control valves are used in combination, the valves do not require many control valves, thus they make oil hydraulic circuits much simpler in configuration.
- These valves are available for injection moulding machine, press machine...etc.
  In comparison with servo valves, the proportional electro-hydraulic control valves have advantages such as: smaller in overall installation, tolerant against fluid contamination and easier maintenance, because the valves structurally are designed and developed, based on conventional valves.
- **Devices for proportional Control**
  Diagram below shows the devices needed for using Proportional Control system.
  Adapt E series to plan using Proportional Control system, when selecting the control valves, also need to select the specification of the devices below.

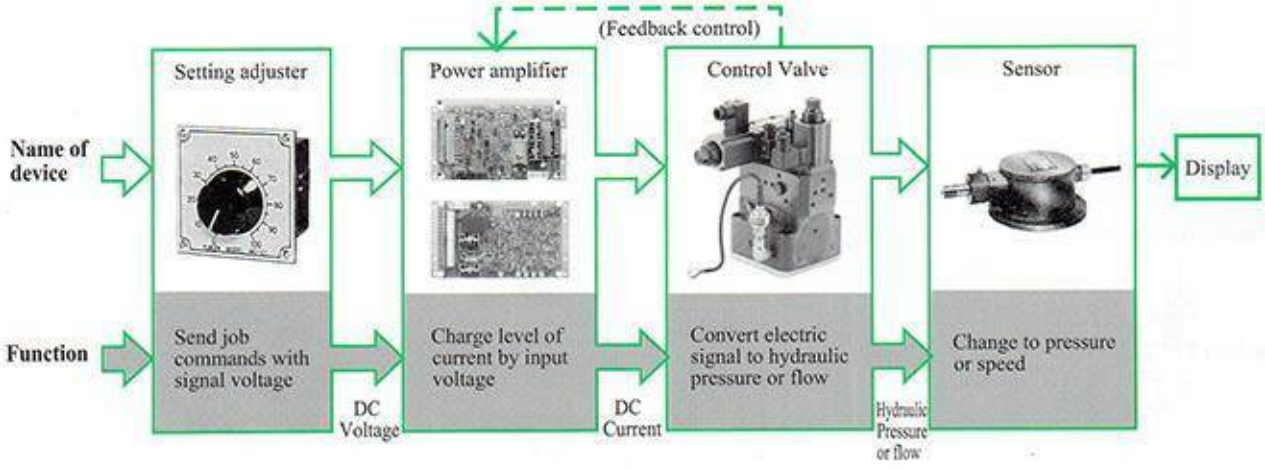

Applicable Controls and Valves

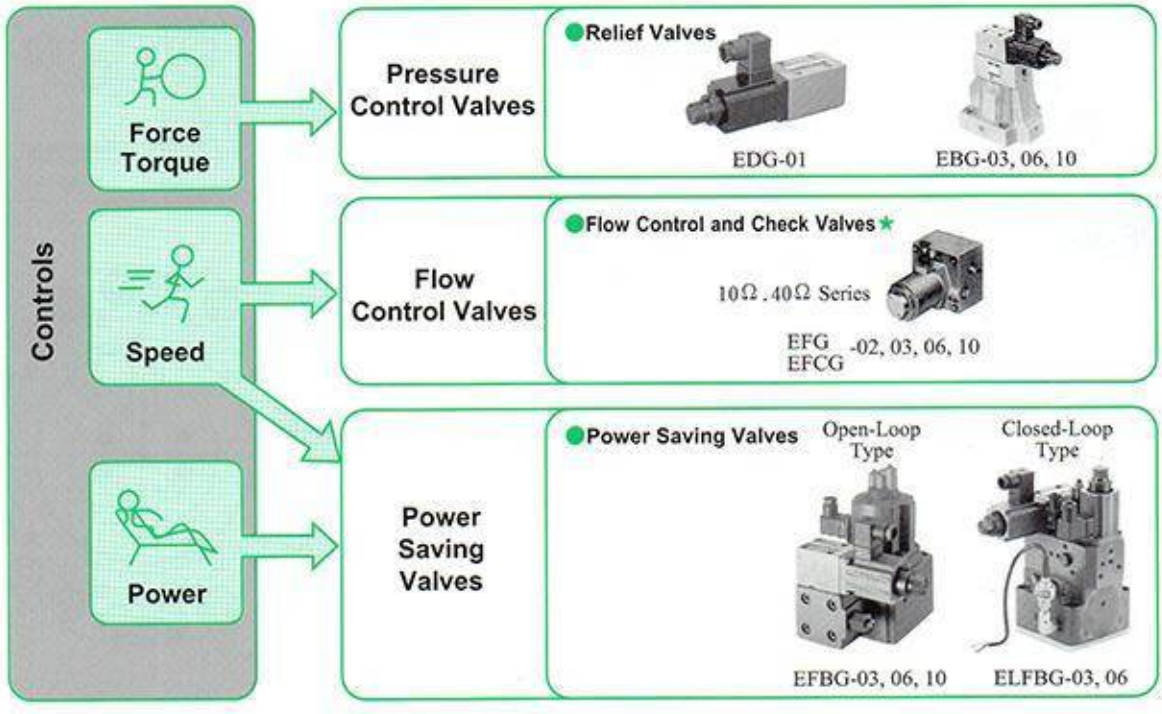

*The valves with mark above are not included in this catalogue, however, please contact our sales engineer for your requirement.

Proportional Electro-Hydraulic Control Valves

Instructions

Hydraulic Fluids

Fluid Types

Any type of hydraulic fluid, listed in the table below can be used.

Petroleum Based Oils	Use fluids equivalent to ISO VG32 or VG46
Synthetic Fluids	Use phosphate ester or polyol ester fluids When this type of fluids is used, please suffix the number "05" to the design number when ordering. When phosphate ester is used, prefix "F-" to the model number because a special seal (fluororubber) will be used. Phosphate ester fluid : (Ex.) F-EDG-01-B-PNT 15 - 6005 Polyol ester fluid : (Ex.) EDG-01-B-PNT 15 - 6005
Water containing Fluids	Use water-glycol fluid

Mounting Positioning Orientation

Be sure that the air vent faced up. The air vent position can be changed as desired.

Air Bleeding

To provide stable control, conduct air bleeding through and fill the solenoid cover with oil.
For air bleeding purposes, gradually loosen the air vent at the end of the solenoid. The air vent can be repositioned as needed so that air is easily expelled from the valve. To change the air vent position, rotate the solenoid adaptor until the air vent is positioned as desired. (see the figure right)

Tank and Drain Piping

The tank-line back pressure and drain back pressure directly affect the minimum adjustment pressure or flow adjustment valve main spool operating force.
Therefore, do not connect the tank or drain pipes to other lines, but connect them directly to the reservoir maintaining the back pressure as low as possible. Be sure that the tank and drain pipe ends are immersed in fluid.

Hysteresis and Repeatability Value Indications

The hysteresis and repeatability values indicated in the specifications for each control valve are determined under the following conditions:
Hysteresis Value:Obtained when Yuken's applicable power amplifier is used.
Repeatability Value:Obtained when Yuken's applicable power amplifier is used under the same conditions

Recommended Fluid Viscosity and Temperature

Use hydraulic fluids which satisfy both the recommended viscosity and oil temperatures given in the table below.

Name	Viscosity	Temperature
Pilot Relief Valves Relief Valves Relieving and Reducing Valves	15~400mm²/s{cSt}	-15~+70°C
Flow Control Valves Flow Control and Check Valves Relief and Flow Control Valves	20~200mm²/s{cSt}	

Control of Contamination

Due caution must be paid to maintaining control over contamination of hydraulic fluids which may otherwise lead to breakdown and shorten the life of the valve. Please maintain the degree of contamination within NAS1638-11, Use 20 μm or finer line filter.

Manual Adjusting Screw

When initial adjustments are to be made or when no current is supplied to the valve due to electrical failure or other problem, turn the manual adjusting screw to temporarily set the valve pressure and flow rate. Under normal conditions, however, this screw must be kept in its original position (see the figure below)

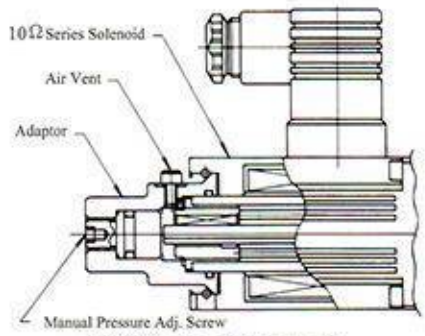

10Ω Series Solenoid

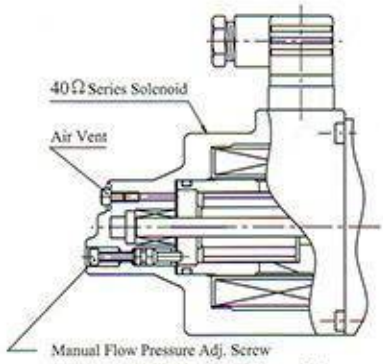

40Ω Series Solenoid

E

Proportional Electro-Hydraulic Control Valves

Attention to install proportional valve

The coil E318 should be installed horizontally. The air vent should be up to let the air release smoothly to make the proportional valve operate normally. It is OK not to release the air.

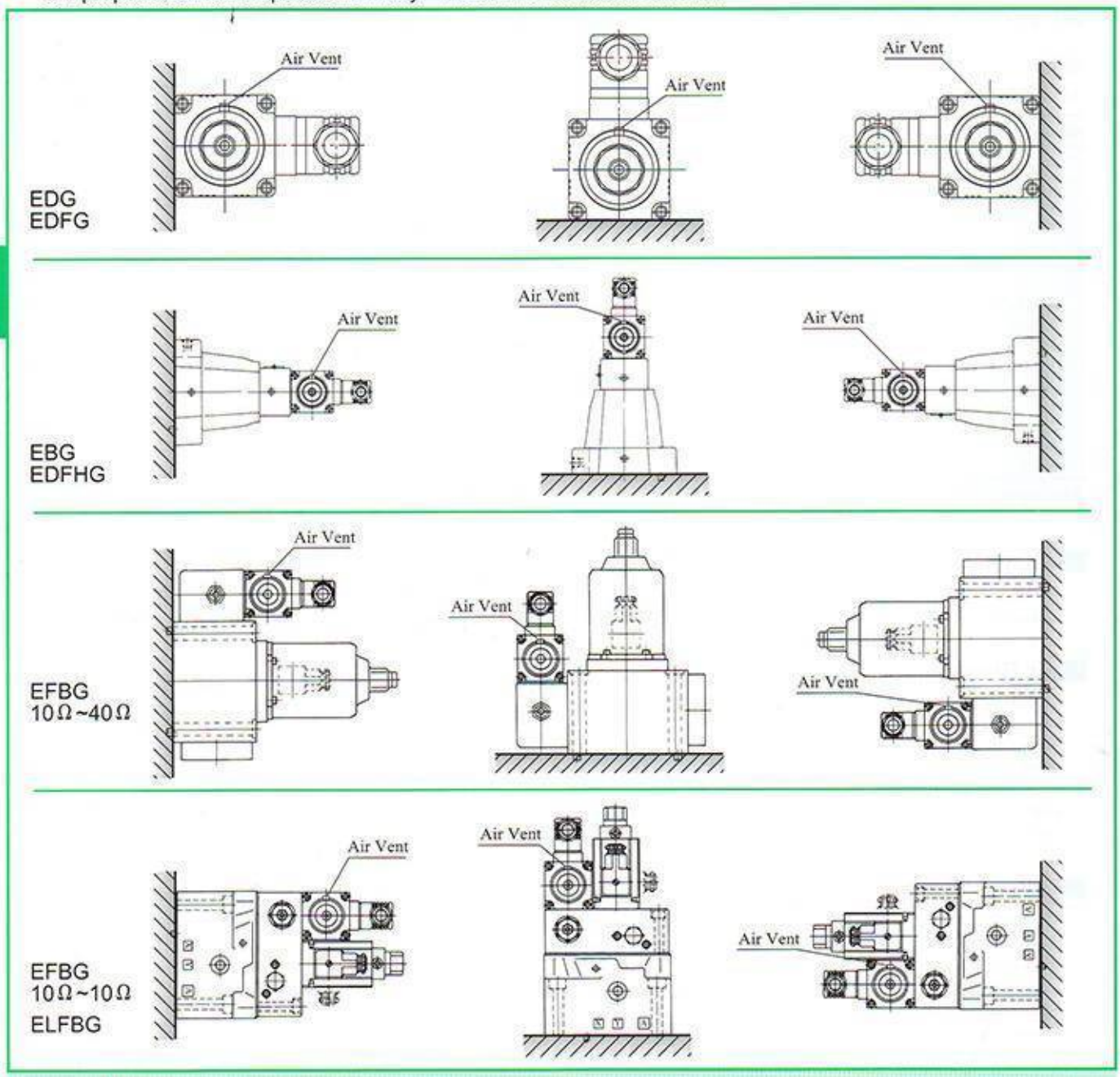

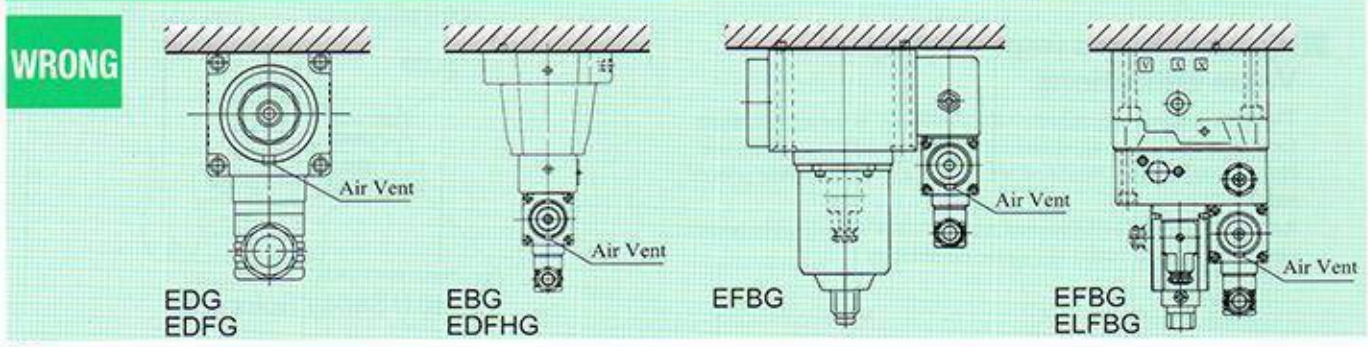

Proportional Electro-Hydraulic Pilot Relief Valves Max. Pressure 25 MPa

This valve consists of a small DC solenoid and a direct - acting relief valve. It serves as a pilot valve for a low flow rate hydraulic system or a proportional electro-hydraulic control valve and controls the pressure in proportion to the input current. Note that this valve is used in conjunction with the applicable power amplifier.

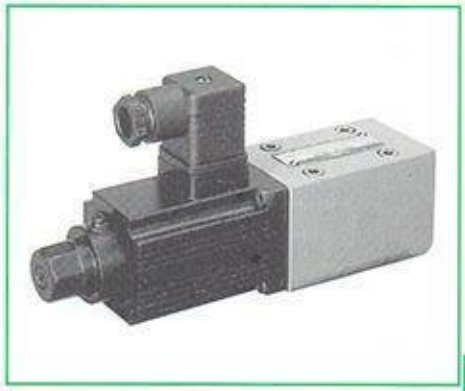

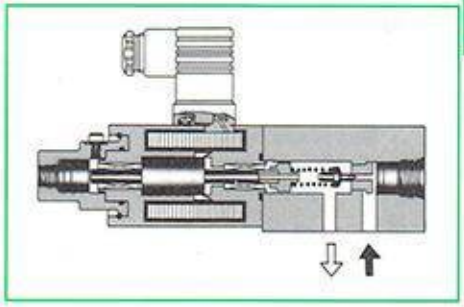

E

Specifications

Description \ Model No.		EDG-01※ - ※ - ※ -P ※T ※ -60T
Max. Operating Press	MPa (kgf/cm²)	24.5 (250)
Max. Flow	L/min	2
Min. Flow	L/min	0.3
Pres. Adj. Range	MPa (kgf/cm²)	Refer to Designation
Rated Current	mA	B:800 C:900 H:950
Coil Resistance (20°C)	Ω	10
Hysteresis		Less than 3%
Repeatability		1%
Power Amplifier		AMN-D-20T (See Page 157)
Mass	kg	2

Model Number Designation

ED	G	– 01	V	– C	– 1	– PN	T13	– 60T
Series Number	Type of Mounting Valve	Size	Applicable Control ★1	Pressure Adj. Range MPa (kgf/cm²)	Safety Valve	P-line Orifice	T-Line Orifice	Design Standard
ED: Proportional Electro-Hydraulic Pilot Relief Valve	G: Sub-Plate Mounting	01	None: General Use V: Vent Control of Relief Valve	A:★3 B:0.5~6.9 (5~70) C:1.0~15.7 (10~160) H:1.2~24.5 (12~250)	None: Without Safety Valve 1: With Safety Valve	PN: Without Orifice (Standard)	T15★2 T13 T11	60T

★1.When the valve is used for vent control purpose, orifice adjustment is required due to piping capacity limitations. Therefore, please contact our sales engineers in advance.
★2.Standard of T-Line Orifice
Press. Adj. Range B:T15, C:T13, H:T11.
The orifice used as the pilot valve may differ from the standard orifice.
★3.There is one model for low adj. pressure, 0.2~4.0 MPa (kgf/cm²), EDG-01V-A-※-P※T※-60T234, the max. flow is limited .

JIS Hydraulic Graphic Symbol

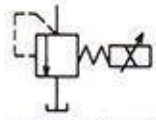

without safety valve

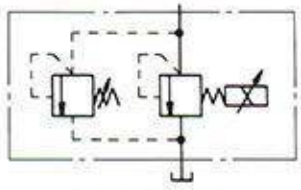

with safety valve

Sub-plate

Sub-plate Model No.	Piping Size Rc	Mass kg
DSGM-01-30	1/8	0.8
DSGM-01X-30	1/4	
DSGM-01Y-30	3/8	

- Sub-plates are available. When ordering, please specify sub-plate model no. from the table above. When sub-plate are not used, the mounting surface should have a good mechanic finish.
- Sub-plate is the same as DSG-01 series Solenoid Operated Directional Valve.
- Please refer to page 88 for dimension details.

Proportional Electro-Hydraulic Pilot Relief Valves Max. Pressure 25 MPa

Instructions

Tank-Line Back Pressure

Check that the tank line pressure does not exceed 0.2MPa (2.0kgf/cm^2)

Vent Control

When this valve is used as a relief valve or for other valve vent control purposes, use 6 mm ID, 300mm long or shorter pipes for piping connections.
If pressure instability is encountered, provided a 1-1.5mm diameter orifice for the relief or other valve vent port.

Circuit Pressure Control

When circuit pressure is directly controlled by this valve, make sure that the trapped oil volume is exceeding 40cm^3.

Low Flow Rates

The preset pressure may become unstable. To avoid such pressure instability, the flow rate should not be lower than 0.3 L/min.

Safety Valve Pressure Setting

The safety valve pressure setting at the maximum flow rate is preset to a level that is 2MPa(20.4kgf/cm^2) higher than the pressure adjustment range upper limit. If the operating pressure upper limit is low or a different flow rate upper limit is used, make adjustment after calculating the safety valve pressure setting from the following equation:Pressure setting =(Operating pressure upper limit)+(Additional pressure indicated right)

Air vent

The air vent should be screwed to the up position and set pressure at 1.5 MPa (15kgf/cm^2) while testing. You should release air fully to reach stable pressure.

Applicable Power Amplifier

For stable performance, it is recommended that Yuken's applicable power amplifiers be used.

Model Number: AMN-D-20T
(Please refer to Page 157)

Attachment

Mounting Bolts

Soc. Hd. Cap. Screw : M5 x 45Lg.....4pcs
Tightening Torque: 8~10 N·m

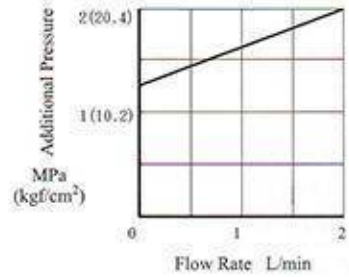

E

EDG-01V- ※-1-P ※T ※-60T

With Safety Valve

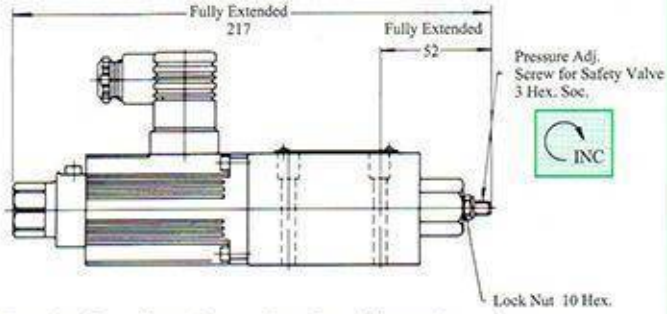

For other dimensions, please refer to the without-safety valve type.

EDG-01V- ※-P ※T ※-60T

Without Safety Valve

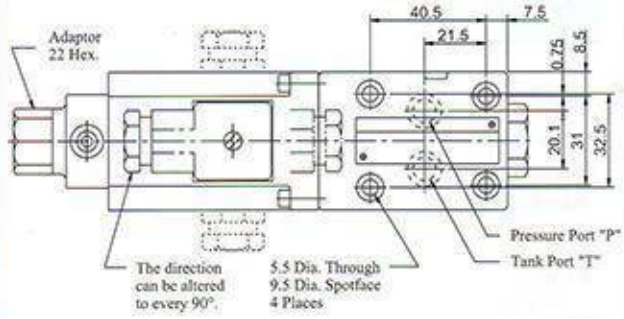

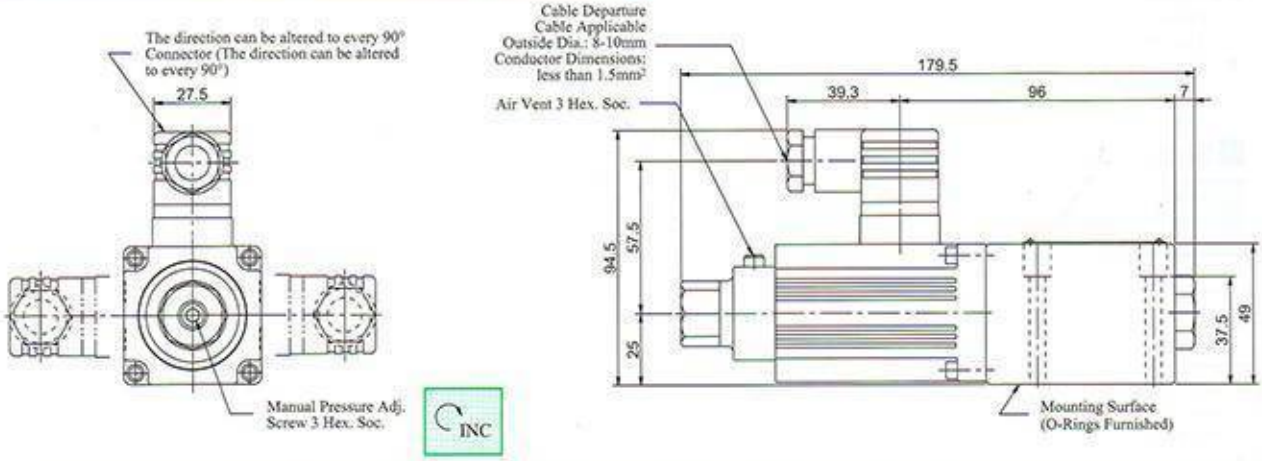

Proportional Relief Valves

Max. Pressure 25 MPa

This valve is combined with a proportional electro-hydraulic pilot relief valve and a specially developed low-noise relief valve. Owing to special vent restrictor, this valve can make pressure control more precise and stable.

Specifications

Description \ Model No.		EBG-03- ※ - ※ -60T	EBG-06- ※ - ※ -60T	EBG-10- ※ - ※ -51
Max. flow	L/min	100	200	400 ★3
Min. Flow	L/min	3	3	3
Pressure Adjustment Range	MPa (kgf/cm²)	Refer to Model Number Designation		
Rated Current	mA	C:770	C:750	C:730
		H:820	H:800	H:780
Coil Resistance (20°C)	Ω	10		
Hysteresis		Less than 2%★1		
Repeatability		Less than 1%★2		
Frequency Response (at 90°C)		12Hz	13 Hz	11Hz
Applicable power Amp		AMN-D-20T (See page 157)		
Mass	kg	5.6	6.3	10

★1.This figures in the table above are those obtained when used in conjunction with YUKEN's power amplifier.
★2.The repeatability of the valve is obtained by having it tested independently on the conditions similar to its original testing.
★3.Product is made by Yuken Kogyo. If you have any inquiry, please contact our sales engineers.
★4.There is one model for low adj. pressure, 0.2 MPa (2~40 kgf/cm²), EBG-※-A-※-6007T, the max. flow is limited .

Graphic Symbol

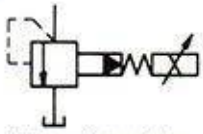

Without Safety Valve

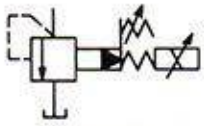

With Safety Valve

E

Input Current vs Pressure (Ex)

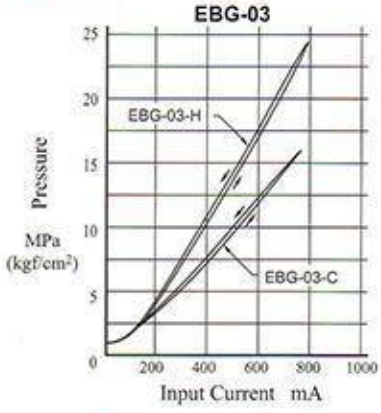

Model Number Designation

EBG-03-C-T- ※

- Series Number (Sub-plate mounting)
- Valve Size
- Pressure Adjustment Range
  - C: 0.6~16 MPa (6~160 kgf/cm²) } EBG-03
  - H: 0.6~25 MPa (6~250 kgf/cm²)
  - C: 0.9~16 MPa (9~160 kgf/cm²) } EBG-06
  - H: 0.9~25 MPa (9~250 kgf/cm²)
  - C: 1.1~16 MPa (11~160 kgf/cm²) } EBG-10
  - H: 1.1~25 MPa (11~250 kgf/cm²)
- Safety Valve
  - None:With Safety valve
  - T:Without Safety Valve
- Design Number

Sub-plate

Valve Model No.	Sub-plate Model No.	Piping Size Rc	Mass kg
EBG-03	BGM-03-20	3/8	2.4
	BGM-03X-20	1/2	3.1
EBG-06	BGM-06-20	3/4	4.7
	BGM-06X-20	1	5.7
EBG-10	BGM-10-20	1-1/4	8.4
	BGM-10X-20	1-1/2	10.3

*Sub-plates are available. When ordering, please specify sub-plate model no. from the table above.
*Please refer to page 56 for dimensions.

Mounting Bolts (Attachment)

Model No.	Soc. Hd. Cap Screw (4 Pcs)	Tightening Troque N•m
EBG-03	M12 x 40 Lg	104 ~ 127
EBG-06	M16 x 50 Lg	253 ~ 310
EBG-10	M20 x 60 Lg	493 ~ 603

Proportional Relief Valves

Max. Pressure 25 MPa

Without Safety Valve : EBG-03/06-※-T-60T

Mounting Surface:
EBG-03:ISO 6264-AR-06-2-A
EBG-06:ISO 6264-AS-08-2-A

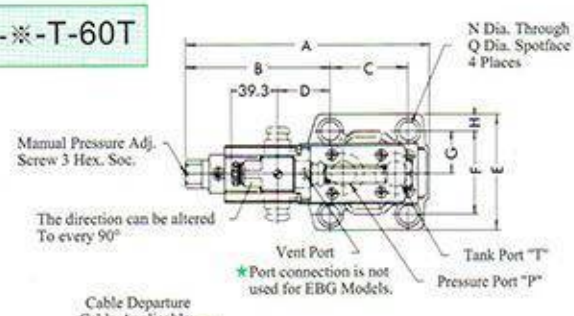

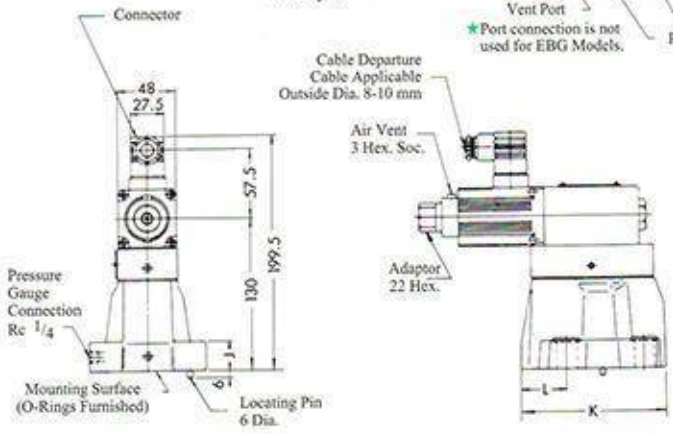

With Safety Valve : EBG-03/06-※

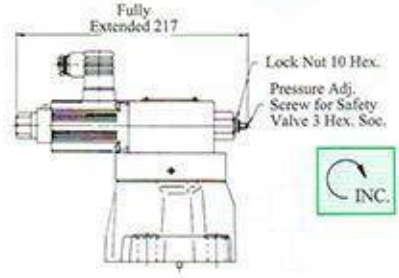

For other dimensions, please see the figures shown left.

Model No.	A	B	C	D	E	F	G	H	J	K	L	N	Q
EBG-03	198.5	118.6	53.8	40.2	76	53.8	26.9	11.1	21.5	106	26.1	13.5	21
EBG-06	206.5	120.5	66.7	42.1	98	70	35	14	26	122	31	17.5	26

Note: For dimensions of mounting surface, please refer to BGM-03,06 type sub-plate (page 56).

Without Safety Valve : EBG-10-※-T-51

Mounting Surface: ISO 6264-AT-10-2-A

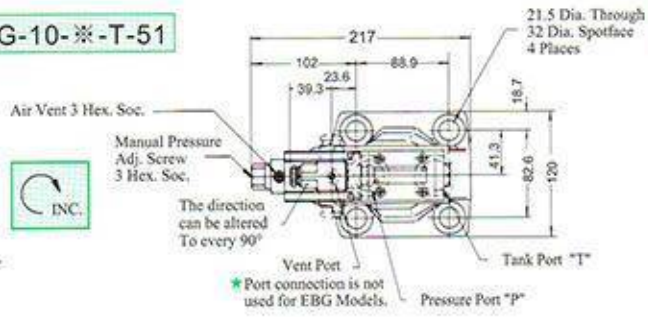

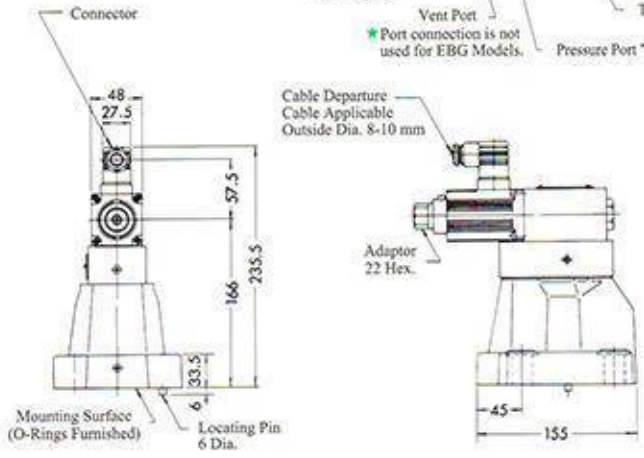

With Safety Valve : EBG-10-※

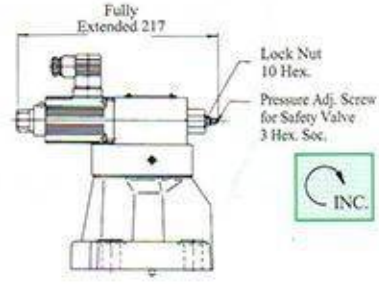

For other dimensions, please see the figures shown left.

Note: For dimensions of mounting surface, please refer to BGM-10 type sub-plate (page 56).

Power Saving Valves

Max. Pressure 25 MPa

● This relief and flow control valve is an energy-saving valve that supplies the minimum pressure and flow necessary for actuator drive.

Specifications

Description \ Model No.		EFBG-03-60 -※-20T145	EFBG-03-125 -※-20T145	EFBG-03-160 -※-20T145	EFBG-06-250 -※-20T145	EFBG-06-250A -※-20T145	EFBG-10-500 -※-20T49	EFBG-10-500A -※-20T49
Max. Flow L/min		60	125	160	250	350	500	700
Flow Controls: Metred Flow Adjustment Range L/min		1~60	1~125	1~160	2.5~250	2.5~350	5~500	5~700
Flow Controls: Differential Pressure MPa (kgf/cm²)		0.6 (6)			0.7 (7)		0.9 (9)	
Flow Controls: Hysteresis		Less then 7%★1						
Flow Controls: Repeatability		Less then 1%★2						
Flow Controls: Rated Current mA		670	560	700	540	700	700	800
Flow Controls: Coil Resistance (20°C)Ω		43.5						
Pressure Controls: Pressure Adjustment Range MPa (kgf/cm²)	C	1.4~14 (14~140)			1.5~14(15~140)	2.0~14(20~140)	1.6~14(16~140)	2.5~14(25~140)
Pressure Controls: Pressure Adjustment Range MPa (kgf/cm²)	H	1.4~21 (14~210)			1.5~21(15~210)	2.0~21(20~210)	1.6~21(16~210)	2.5~21(25~210)
Pressure Controls: Hysteresis		Less then 3%★1						
Pressure Controls: Repeatability		Less then 1%★2						
Pressure Controls: Rated Current mA ★3	C	730	730	750	730	740	780	750
Pressure Controls: Rated Current mA ★3	H	730	730	730	730	740	800	750
Pressure Controls: Coil Resistance (20°C) Ω ★3		10						
Mass kg		16 (14)★4			30 (28)★4		60 (58)★4	

★1 The figures in the table above are obtained when used in conjunction with YUKEN's power amplifier.
★2 The repeatability of the valve is obtained by having it tested independently on the conditions similar to its original testing.
★3 The rating for pressure controls are applied to models with proportional pilot relief valve (EFBG-※-※-C/H).
★4 The mass with ( ) mark is applied to models without proportional pilot relief valve (EFBG-※-※).
★5 Without Proportional Pilot Relief Valve, Max. Pressure can reach 25 MPa (250 kgf/cm²)..
★6 The air vent should be screwed to the up position and released air fully to reach stable pressure .

Graphic Symbol

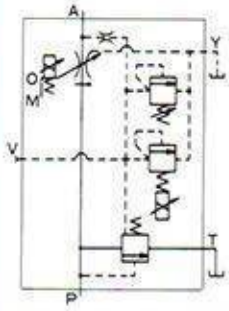

With Proportional Pilot Relief Valve

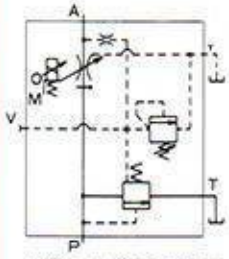

Without Proportional Pilot Relief Valve

Model Number Designation

EFBG-03-125-C-※

- Series Number (Sub-plate Mounting)
- Valve Size: 03, 06, 10
- Max. Metered Flow
  03:60,125,160
  06:250, 250A (350 L/min)
  10:500, 500A (700 L/min)
- Design Number
- Proportional Pilot Relief Valve Pressure Adjustment Range
  C/H } See Specifications
  None: Without Proportional Pilot Relief Valve

Applicable Power Amplifiers(Options)

Valve Model No.	Power Amplifiers Model No	
	For Flow Control	For Pres. Control
EFBG-※-※-C/H	★ AME-D2-H1-※-12	

★Product is made by Yuken Kogyo. (See page 156)

Mounting Bolts (Attachment)

Model No.	Soc. Hd. Cap Screw (4Pcs)	Tightening Torque N•m
EFBG-03	M10 x 100 Lg	60~74
EFBG-06	M16 x 130 Lg	253~310
EFBG-10	M20 x 130 Lg	493~603

Sub-plate

Valve Model No.	Sub-plate Model No.	Piping Size	Mass kg
EFBG-03	EFBGM-03Y-10	Rc 3/4	6
	EFBGM-03Z-10	Rc 1	
EFBG-06	EFBGM-06X-10	Rc 1	12.5
	EFBGM-06Y-10	Rc 1-1/4	16
EFBG-10	EFBGM-10Y-10	1-1/2 or 2 flange mounting★	37

1. Sub-plates are available. When ordering, please specify sub-plate model no. from the table above (page 140).
2. ★When ordering EFBGM-10Y-10, please use F3 pipe flange, or contact our sales engineer.

E

Power Saving Valves

Max. Pressure 25 MPa

E

EFBG-*-20T145
Input Current vs.Flow

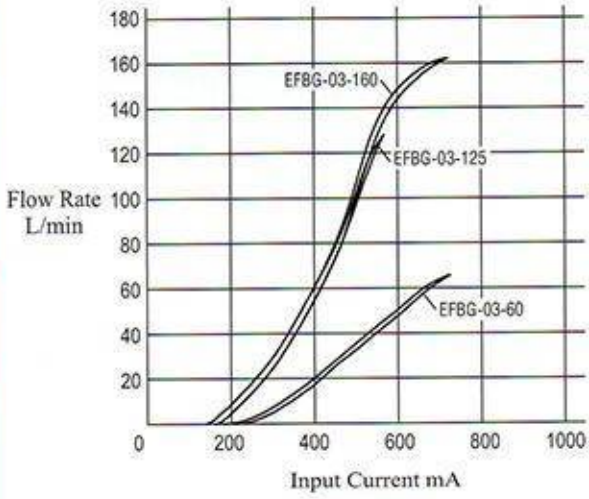

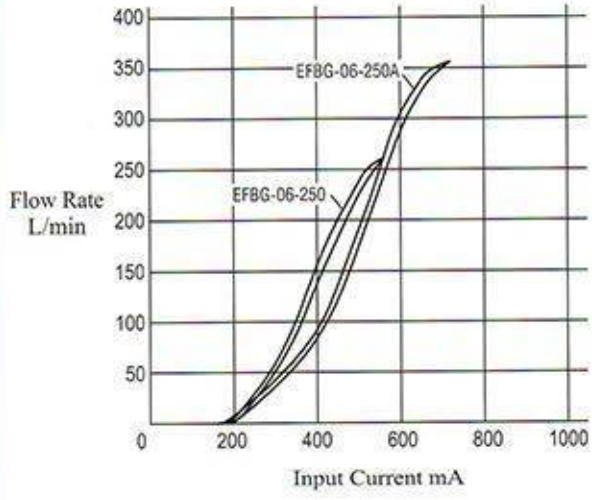

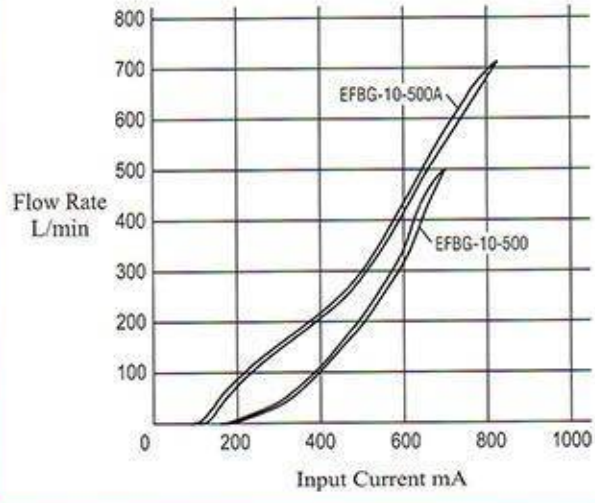

EFBG-*-20T145
Input Current vs.Pressure

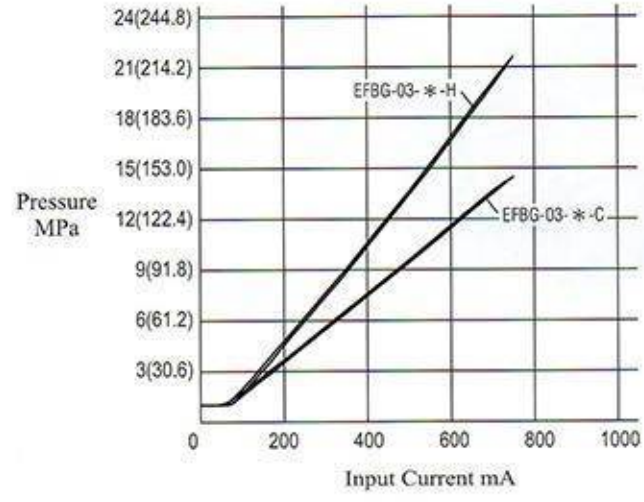

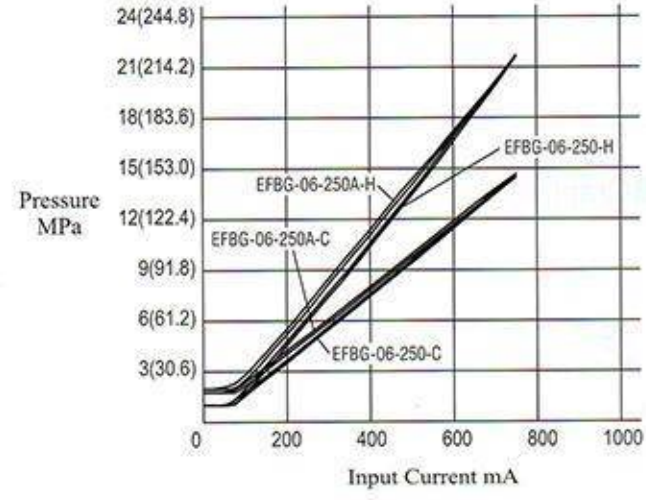

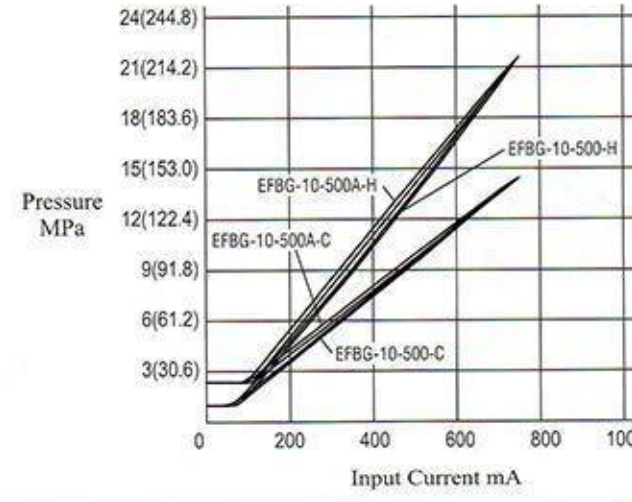

Power Saving Valves

Max. Pressure 25 MPa

With Proportional Pilot Relief Valve

EFBG-03-125-$^{C}_{H}$-※

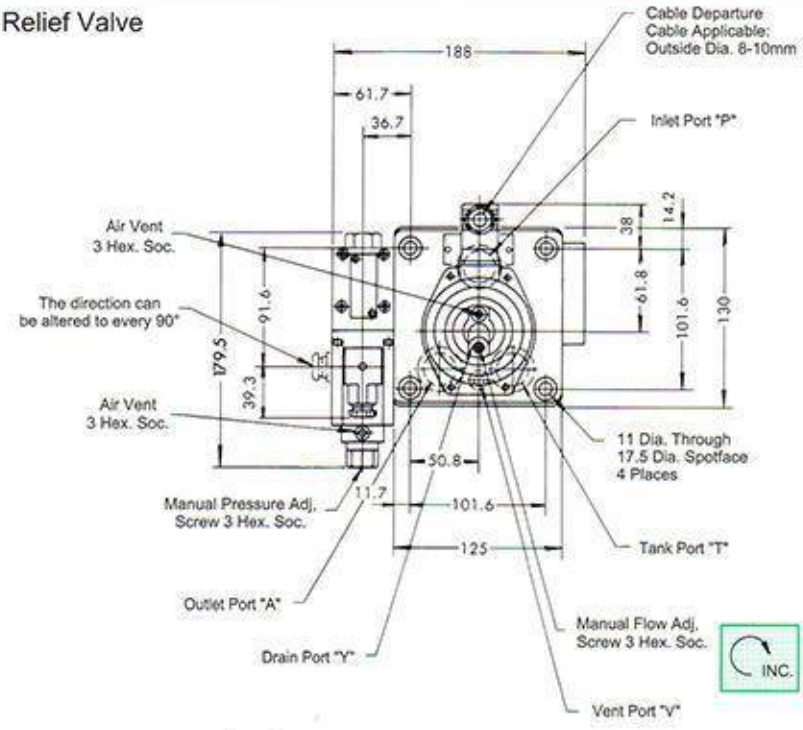

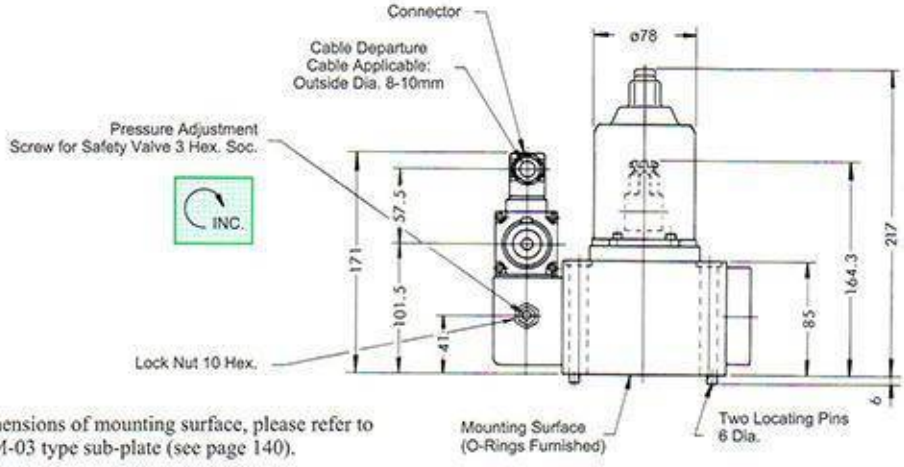

Note: For dimensions of mounting surface, please refer to EFBGM-03 type sub-plate (see page 140).

Without Proportional Pilot Relief Valve

EFBG-03-125-※

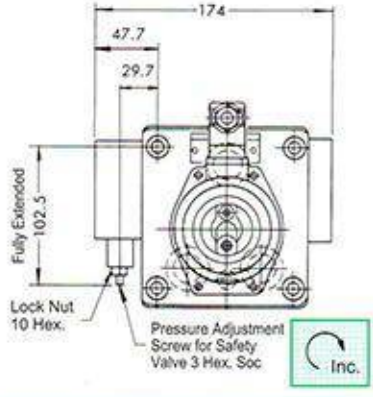

For other dimensions,
please refer to the drawing above.

Power Saving Valves

Max. Pressure 25 MPa

E

With Proportional Pilot Relief Valve

EFBG-06-250-$^{C}_{H}$-※

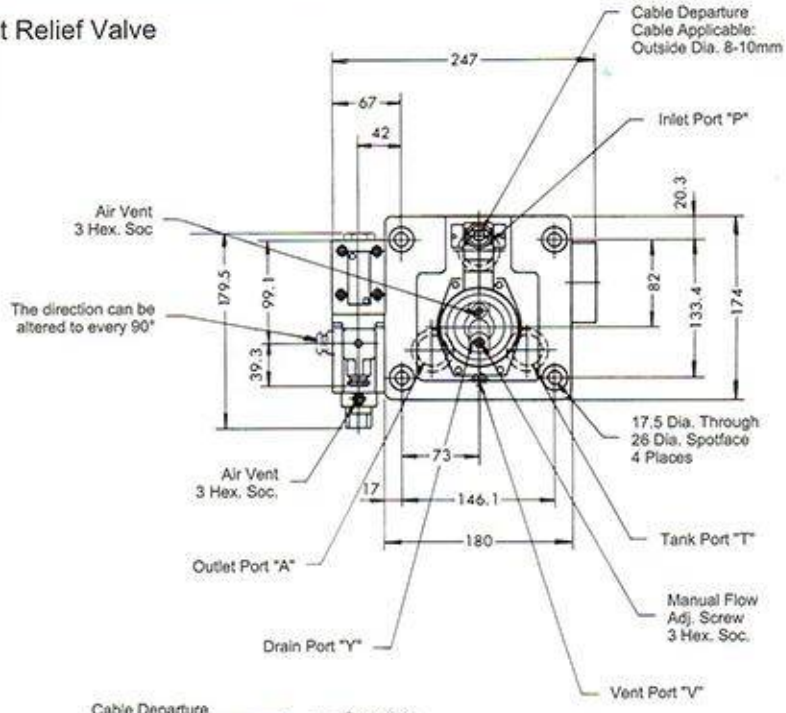

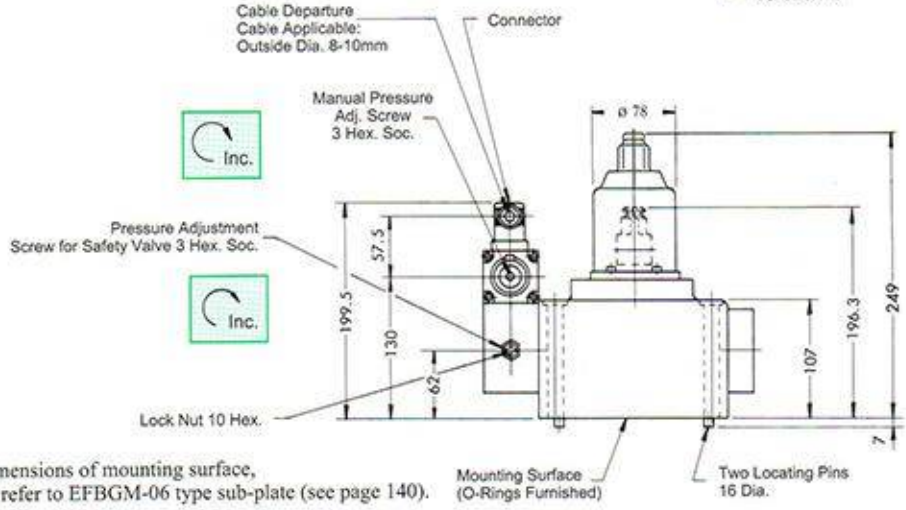

Note: For dimensions of mounting surface, please refer to EFBGM-06 type sub-plate (see page 140).

Without Proportional Pilot Relief Valv

EFBG-06-250-※

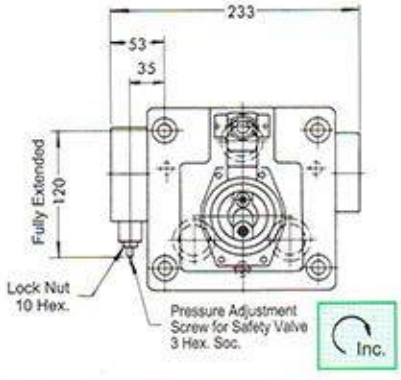

For other dimensions, please refer to the drawing above

Power Saving Valves

Max. Pressure 25 MPa

With Proportional Pilot Relief Valve

EFBG-10-500-$^{C}_{H}$-※

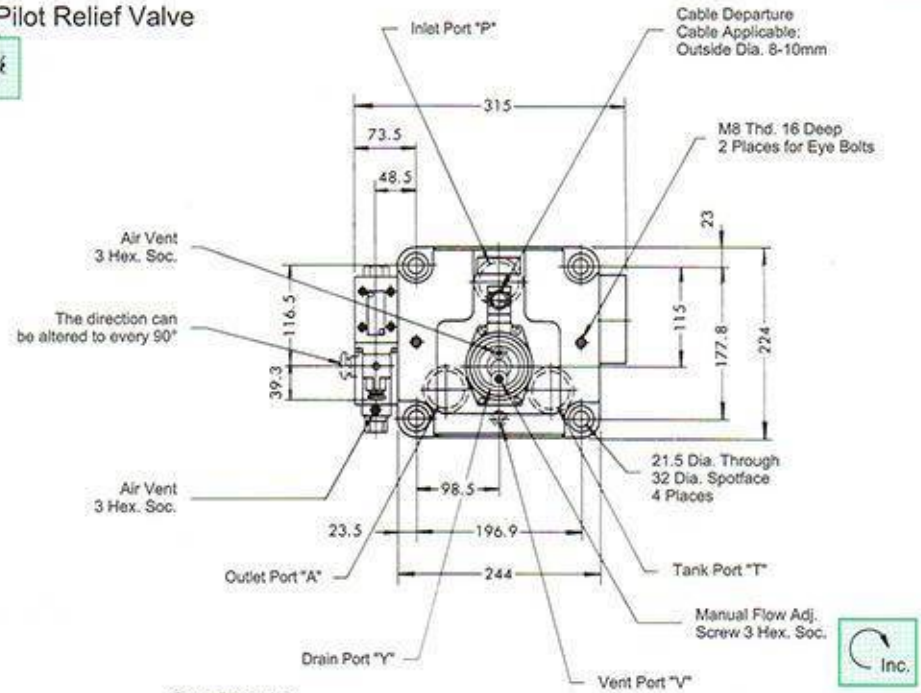

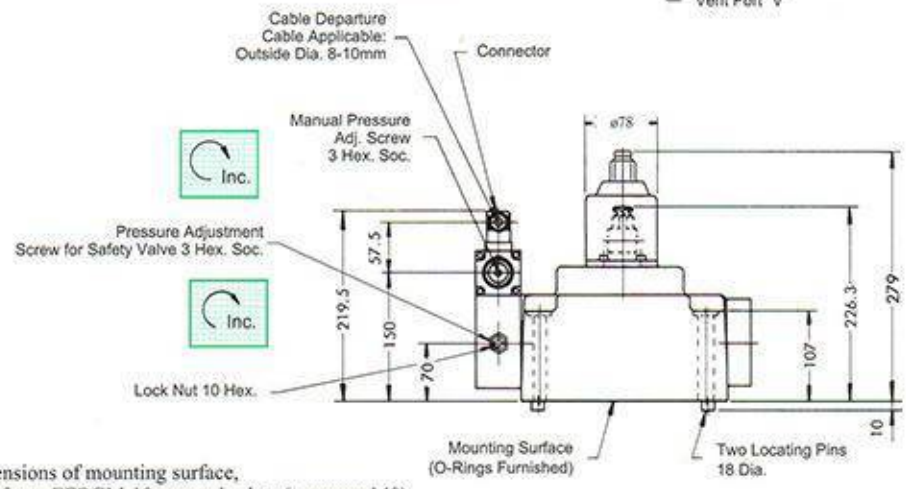

Note: For dimensions of mounting surface,
please refer to EFBGM-10 type sub-plate (see page 140).

Without Proportional Pilot Relief Valve

EFBG-10-500-※

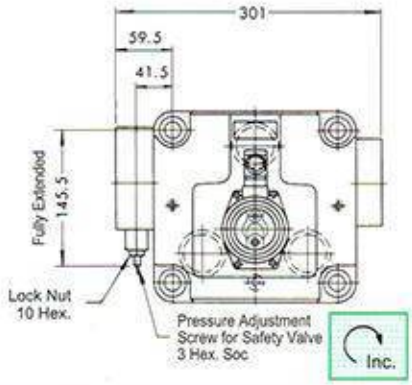

For other dimensions,
please refer to the drawing above

Power Saving Valves

Max. Pressure 25 MPa

E

Sub-Plate

EFBGM-03Y / 03Z-10 / 1080 / 1090

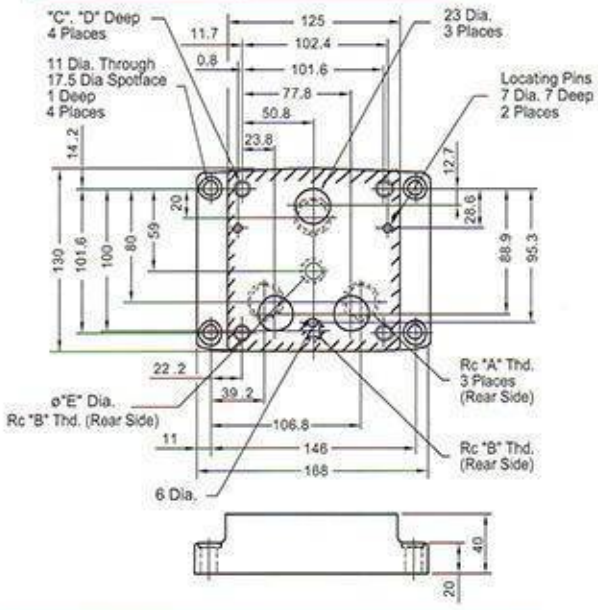

Model No.	Piping Size "A"	Piping Size "B"	"C"	Dimension mm D	Dimension mm E
EFBGM-03Y-10	Rc 3/4	Rc 1/4	M10	18	11
EFBGM-03Z-10	Rc 1				
EFBGM-03Y-1080	3/4 BSP.F	1/4 BSP.F			11.7
EFBGM-03Z-1080	1 BSP.F				
EFBGM-03Y-1090	3/4 NPT	1/4 NPT	3/8-16 UNC	21	11
EFBGM-03Z-1090	1 NPT				

EFBGM-06X / 06Y-10 / 1080 / 1090

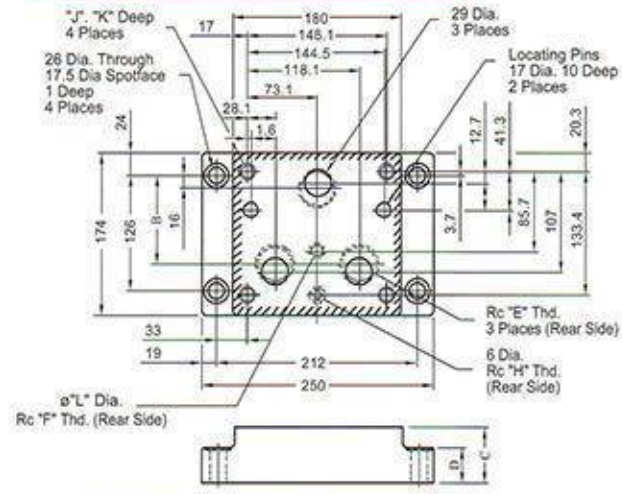

Model No.	Dimension mm B	Dimension mm C	Dimension mm D
EFBGM-06X	103.3	45	35
EFBGM-06Y	95	60	40

Model No.	Piping Size "E"	Piping Size "F"	Piping Size "H"	"J"	Dimension mm K	Dimension mm L
EFBGM-06X-10	Rc 1	Rc 3/8	Rc 1/4	M16	30	14
EFBGM-06Y-10	Rc 1-1/4					
EFBGM-06X-1080	1 BSP.P	3/8 BSP.F	1/4 BSP.F	M16	30	15.2
EFBGM-06Y-1080	1-1/4 BSP.F					
EFBGM-06X-1090	1 NPT	3/8 NPT	1/4 NPT	5/8-11 UNC	35	14
EFBGM-06Y-1090	1-1/4 NPT					

EFBGM-10Y-10 / 1080 / 1090

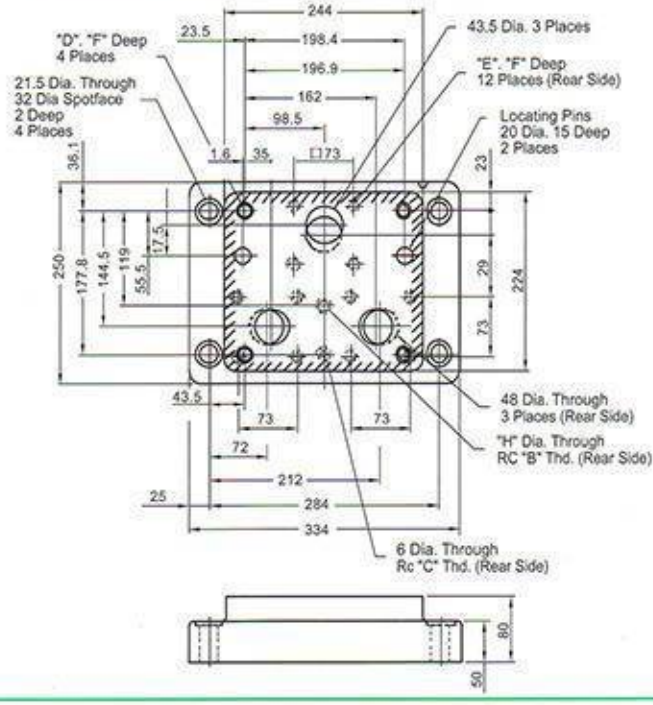

Model No.	Piping Size "B"	Piping Size "C"	"D"	"E"
EFBGM-10Y-10	Rc 3/8	Rc 1/4	M20	M16
EFBGM-10Y-1080	3/8 BSP.F	1/4 BSP.F		
EFBGM-10Y-1090	3/8 NPT	1/4 NPT	3/4-10 UNC	5/8-11 UNC

Model No.	Dimension mm F	Dimension mm H
EFBGM-10Y-10	32	14
EFBGM-10Y-1080		15.2
EFBGM-10Y-1090	34	14

Power Saving Valves (10Ω~10Ω) Max. Pressure 25 MPa

This relief and flow control valve is an energy-saving valve that supplies the minimum pressure and flow necessary for actuator drive.
Since this valve controls the pump pressure by following the load pressure while keeping the differential pressure minimized, it serves as a low power-consumption, energy-saving, meter-in, controlled flow adjustment valve.
Further, since a temperature compensation function is incorporated, this valve provides consistent flow control without regard to the fluid temperature.

Specifications

Description \ Model Numbers			EFBG-03-125-※-※-60T248
	Max.Operating Pressure	MPa (kgf/cm²)	25 (250)
	Max. Flow	L/min	125
	Metred Flow Adjustment Range	L/min	1~125
	Min. Pilot Pressure	MPa (kgf/cm²)	1.5 (15.3)
	Pilot Flow L/min	at Normal	1
		at Transition	3
Flow Controls	Rated Current	mA	800
	Coil Resistance	(20°C)Ω	10
	Differential Pressure	MPa (kgf/cm²)	0.6(6.1)
	Hysteresis		Less then 3%
	Repeatability		1%
Pressure Controls ★1	Pres. Adj. Range ★2 MPa(kgf/cm²)		C : 1.2 - 16 (12~160)
			H : 1.4 - 25 (14~250)
	Rated Current	mA	C : 890 H : 970
	Coil Resistance	(20°C)Ω	10
	Hysteresis		Less then 2%
	Repeatability		1%

★1. The specifications for pressure controls are applied to models with proportional pilot relief valve. (Ex. EFBG-03-125-C-※-60T)
★2. The maximum pressure adjustment range of the models without proportional pilot relief valves is 25 Mpa (250 kgf/cm²) (Ex. EFBG-03-125-※-60T)
3. Drain back pressure: Check that the drain back pressure does not exceed 0.2 Mpa (2.0 kgf/cm²)
4. When relief valve passing flow rate is low in pressure control state: to avoid preselected pressure instability, use a passing flow rate of 15 L/min or higher. Further, check that the tank-line back pressure does not exceed 0.5 Mpa. (5.1 kgf/cm²)
5. Safety Valve Pressure Setting: The pressure of the safety valve is preset at the value equal to the upper limit of the pressure adjustment range plus 2 Mpa (20.4 kgf/cm²). Please adjust the pressure of the valve so preset to meet the pressure to be used actually.

Graphic Symbol

With Proportional Pilot Relief Valve

External Pilot Internal Pilot

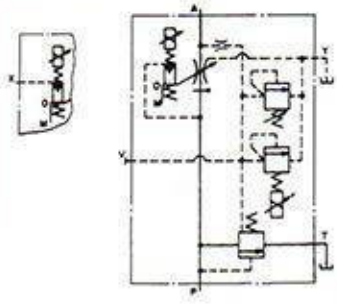

Without Proportional Pilot Relief Valve

External Pilot Internal Pilot

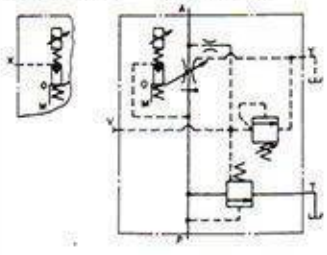

Applicable Power Amplifiers (Options)

Valve Model No.	Power Amplifiers Model No	
	For Pres. Control	For Flow Control
EFBG-03-125-(E)	-	★ AMN-D-20T
EFBG-03-125-C-(E)	★ AMN-D-20T	

1.For stable performance, it is recommended that Yuken's applicable power amplifiers be used.
2. ★Please refer to page 157

Sub-plate

Valve Model No.	Sub-plate Model No.	Piping Size	Mass kg
EFBG-03	EFBGM-03Y-20	Rc 3/4	6
	EFBGM-03Z-20	Rc 1	

* Please refer to page 141 for dimension details.

Mounting Bolts (Attachment)

Model No.	Soc. Hd. Cap Screw (4 Pcs)	Tightening Torque N•m
EFBG-03	M10 x 65 Lg	60 ~ 74

Model Number Designation

EFBG-03-125-C-E-60T248

- EFBG: Series Number (Sub-plate Mounting)
- 03: Valve Size: 03
- 125: Max. Metered Flow: 125
- C: Proportional Pilot Relief Valve Pressure Adjustment Range C / H } See Specifications above; None: Without Proportional Pilot Relief Valve
- E: Pilot Connection None: Internal Pilot E: External Pilot
- 60T248: Design Number

Power Saving Valves (10Ω~10Ω) Max. Pressure 25 MPa

Step Response of Flow & Pressure Controls

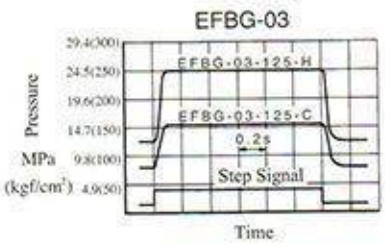

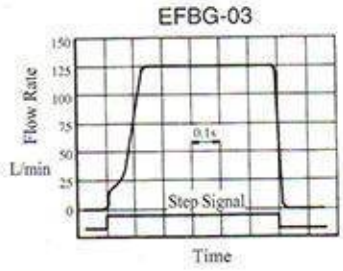

Flow & Pressure VS Input Current

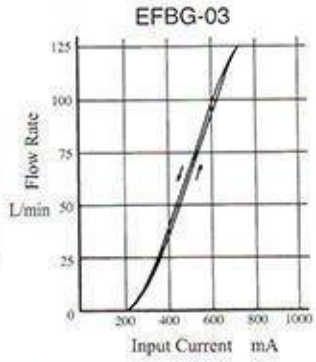

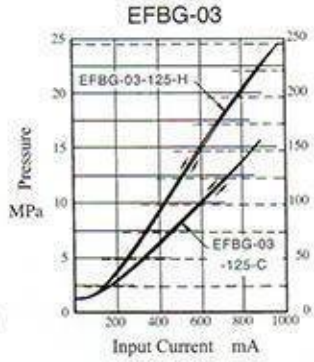

These Characteristics have been obtained by measuring on each valve.
Therefore, they may vary according to a hydraulic circuit to be used.

E

EFBG-03-125-※

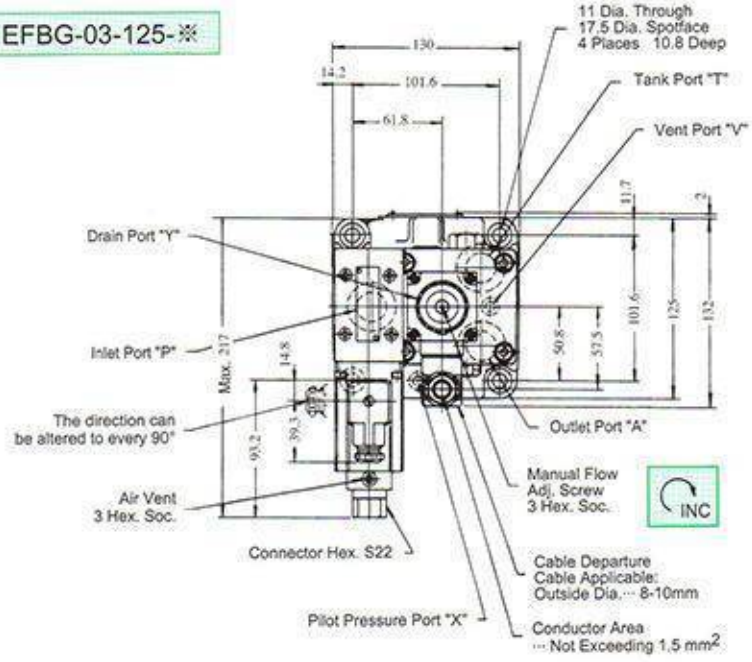

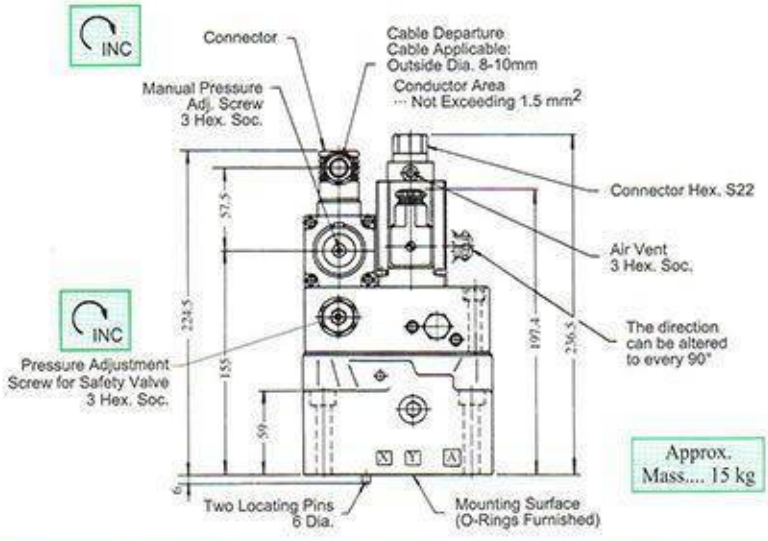

Approx. Mass.... 15 kg

EFBG-03-125-(E)

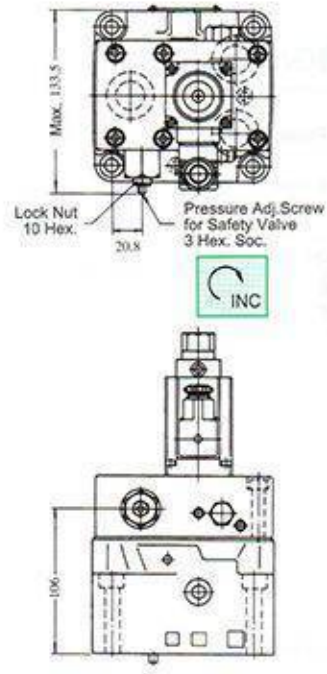

• For other dimensions, please refer to the models with Proportional Pilot Relief Valve.

Approx. Mass.... 14 kg

High Performance Proportional Electro-Hydraulic Relief And-Flow Control Valves

Max. Pressure 25 MPa

ELFB(C)G

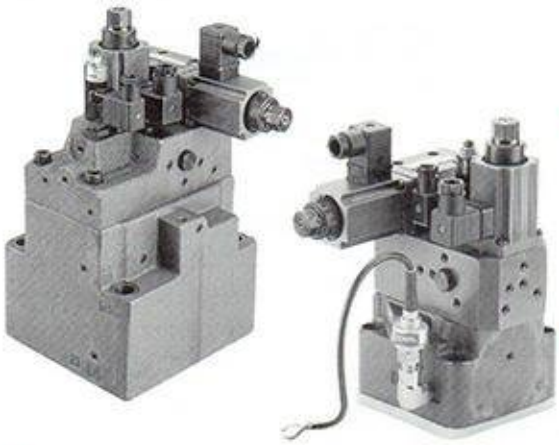

- This valve is a closed-loop control Proportional Electro-Hydraulic valves. Closed-loop control achieves high response, high precision and high performance (flow control and pressure control). We have completed the series, 4 models, the max. flow from 125 L/min to 600 L/min.
- The flow control of this series was adopted by a new developed small solenoid, together with spool-position-detection LVDT & pressure sensor. It can detect the position and flow of the flow control spool and respond to the control system. It can perfectly achieve high response, high precision and high performance closed-loop control. (flow response is standard, pressure response is options.)
- ELFB(C)G-06 was designed by big flow, and the max. flow of this valve can reach 600 L/min. The dimension and weight of this valve are smaller than traditional valves and it will help to make equipment smaller and lighter.

E

Model Number Designation

*There is also low pressure type (T340) for options. Please contact our sales engineers.

ELFB	G	- 03	- 125	- C	- E	- L	- 20T
Series Number	Type of Mounting	Valve Size	Max. Metred Flow L/min	Proportional Pilot Relief Valve Pressure Adj. Range	Pilot Connection	Pressure Closed-Loop	Design Number
ELFB : Proportional Electro-Hydraulic Flow Control and Relief Valve **ELFBC :** Proportional Electro-Hydraulic Flow Control and Relief Check Valve	**G :** Sub-plate Mounting	**-03**	**125 :** 125 L/min **170 :** 170 L/min	C :1.2~16 MPa H :1.2~21 MPa	**None :** Internal Pilot **E :** External Pilot	**None :** Open-Loop **L :** Pressure Closed-Loop	**- 20T** *
				C :2.0~18 MPa H :2.0~21 MPa			
		-06	**300 :** 300 L/min **600 :** 600 L/min	C :1.2~16 MPa H :1.2~21 MPa			

Graphic Symbols

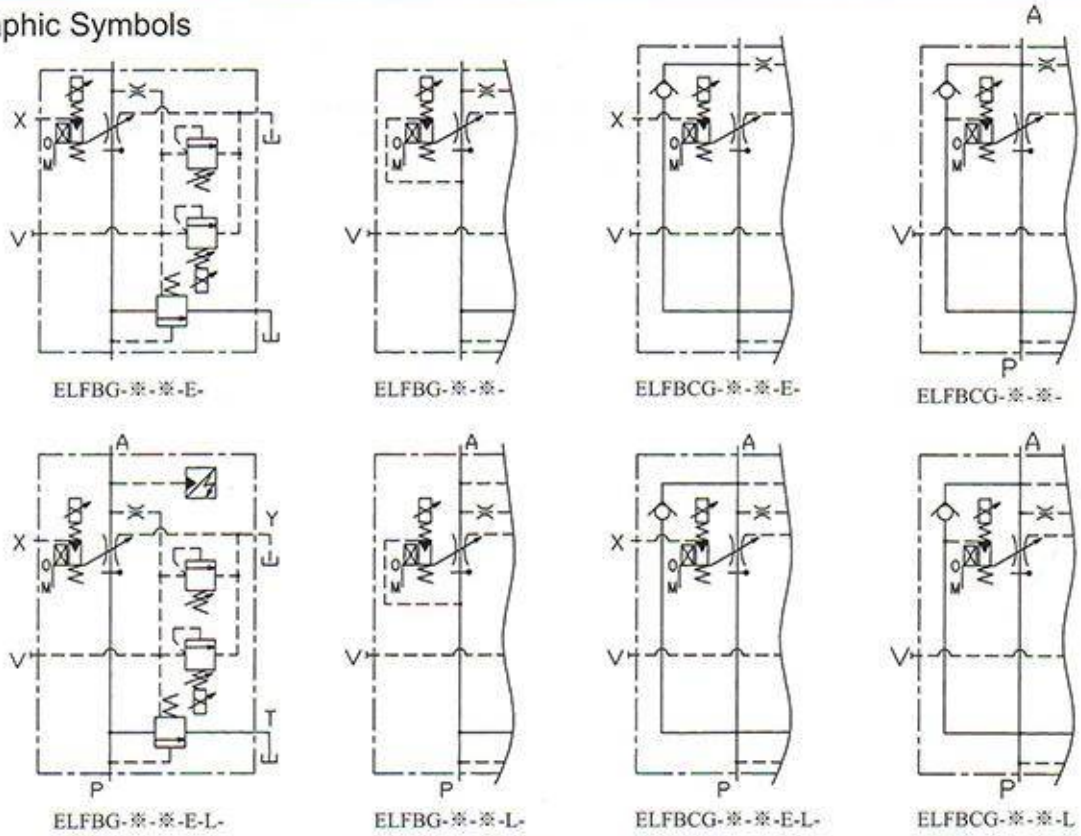

ELFBG-※-※-E-
ELFBG-※-※-
ELFBCG-※-※-E-
ELFBCG-※-※-
ELFBG-※-※-E-L-
ELFBG-※-※-L-
ELFBCG-※-※-E-L-
ELFBCG-※-※-L

High Performance Proportional Electro-Hydraulic Relief And-Flow Control Valves

Max. Pressure 25 MPa

Specifications

Description \ Model Numbers		ELFB(C)G-03-125 -※-※-20T	ELFB(C)G-03-125 -※-※-L-20T	ELFB(C)G-03-170 -※-※-20T	ELFB(C)G-03-170 -※-※-L-20T	ELFB(C)G-06-300 -※-※-20T	ELFB(C)G-06-300 -※-※-L-20T	ELFB(C)G-06-600 -※-※-20T	ELFB(C)G-06-600 -※-※-L-20T
Max.Operating Pressure		25 MPa							
Max. Flow		125 L/min		170 L/min		300 L/min		600 L/min	
Metred Flow Adjustment Range		1~125 L/min		1~170 L/min		2.5~300 L/min		5~600 L/min	
Min. Pilot Pressure		1.5 MPa							
Pilot Flow	at Normal	1 L/min				1 L/min			
	at Transition	3 L/min				6 L/min			
Flow Controls: Differential Pressure		0.6~0.8 MPa		0.85~1 MPa		0.7~0.9 MPa		0.85~0.95 MPa	
Flow Controls: Hysteresis		Less then 0.5 %							
Flow Controls: Repeatability		Less then 0.5 %							
Flow Controls: Step Response	0→100%V	0.110 s		0.125 s		0.150 s		0.170 s	
Flow Controls: Step Response	100%→0V	0.150 s		0.150 s		0.150 s		0.150 s	
Flow Controls: Input Signal		DC10V at MAX. Q							
Flow Controls: Coil Resistance		4 Ω							
Flow Controls: Power Input (Max.)		25 W							
Pressure Controls: Pres. Adj. Range		C:1.6~16 MPa ; H:1.6~21 MPa		C:2.3~18 MPa ; H:2.3~21 MPa		C:1.6~16 MPa ; H:1.6~21 MPa			
Pressure Controls: Hysteresis		Less then 2%	Less then 1%	Less then 2%	Less then 1%	Less then 2%	Less then 1%	Less then 2%	Less then 1%
Pressure Controls: Repeatability		Less then 1%	Less then 0.5%	Less then 1%	Less then 0.5%	Less then 1%	Less then 0.5%	Less then 1%	Less then 0.5%
Pressure Controls: Step Response	0→100%V	0.115 s	0.100 s	0.135 s	0.110 s	0.120 s	0.100 s	0.135 s	0.110 s
Pressure Controls: Step Response	100%→0V	0.175 s	0.125 s	0.170 s	0.125 s	0.170 s	0.125 s	0.170 s	0.125 s
Pressure Controls: Rated Current		880 mA	-	940 mA	-	850 mA	-	820 mA	-
Pressure Controls: Coil Resistance		10 Ω							
Pressure Controls: Power Input (Max.)		10 W							
Ambient Temperature		0~50 °C							
Ambient Humidity		30~90 %							
Approx. Mass		15 kg	15.3 kg	15 kg	15.3 kg	35 kg	35.3 kg	35 kg	35.3 kg

Note 1. The above specifications was tested with Yuken-specialized amplifier. Input voltage vs flow & Input current vs pressure are collocated by valves and amplifiers but there will be some inaccuracy in performance. Please adjust the "NULL" & "SPAN" on the amplifier. The actual performance will vary according to different circuit.

Note 2. Evaluation for flow and pressure step response. (1) the time of flow step response up: when the sleeve seat ass'y closed, flow-controlled spool opened, the time to reach setting flow. To evaluate the time of flow up, not only the response time of flow-controlled spool, but also the response time of the sleeve seat ass'y. The pilot pressure should be over 1.5MPa to meet the above up time and the input current should be 1.4V ~ 1.5V. (2) the time of flow step response down: The valve is made by meter in. When the flow-controlled spool closed, there will be no flow to A port, so we evaluate the response time by flow-controlled spool. (3) the time of pressure step response: evaluate by the response time of A port pressure.

Note 3. The back pressure of return piping and drain will directly influence the min. adjusting pressure or flow adjusting spool. Therefore, don't connect the return or drain piping with other piping but connect to the tank. It will make the back pressure as low as possible. Make sure the end of the return and drain piping immerged in the fluid and the drain back pressure should be under 0.2 MPa.

Note 4. In order to prevent setting pressure unstable, flow rate should not be less than 15 L/min and the return back pressure should not be higher than 0.5 MPa.

Note 5. The preset pressure of safety valve should be set 2 MPa higher than the Max. adjusting pressure. While operating, the pressure should be preset according to the working pressure. After presetting, please lock the adj. screw.

Note 6. In order to keep flow control and pressure control stable, release the air vent of the coil and LVDT gradually. Let the air out completely and fluid flow into the coil, then lock the screws of the air vent.

Note 7. Use LVDT to make flow adjusting spool positioning. LVDT has been set at zero exwork and please do not to adjust it.

Note 8. At first adjustment or electric shut down and no current into the valve, you can use manual adj. screw to adjust the pressure and flow. However, under normal situations, the screws should be loosened to the beginning position.

Note 9. Please confirm the wiring between valve and amplifier is correct. Please operate the valve 15 minute after the electric is on to make sure the amplifier stable. Please use two separate power supply for the amplifiers.

High Performance Proportional Electro-Hydraulic Relief And-Flow Control Valves

Max. Pressure 25 MPa

Input Current vs. Flow (with flow closed-loop)

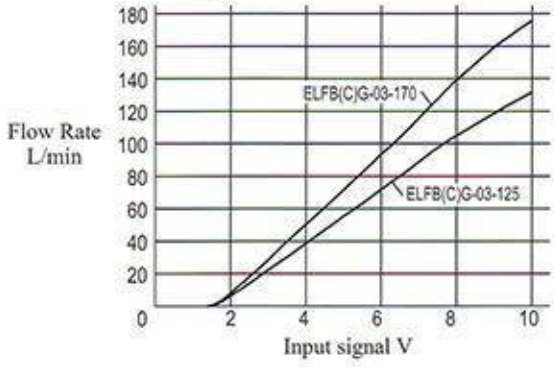

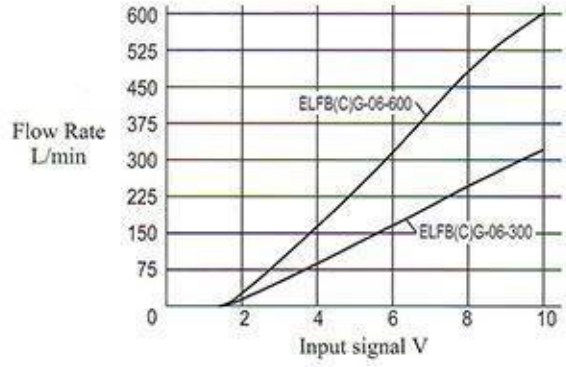

Input Current vs. Pressure (without pressure closed-loop)

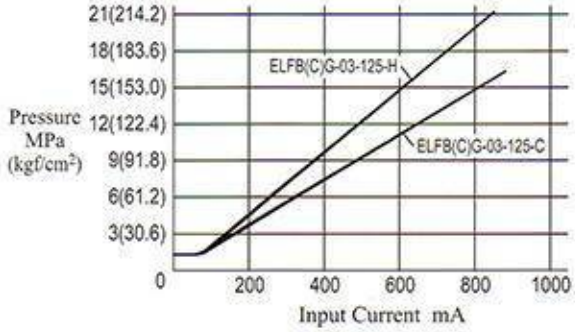

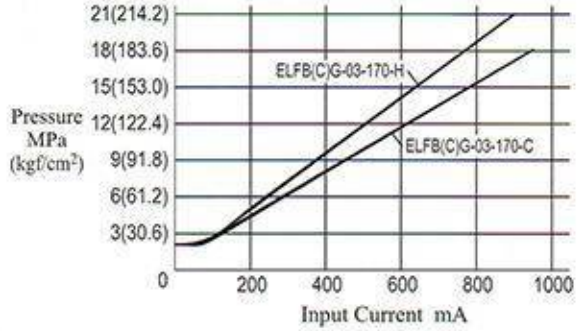

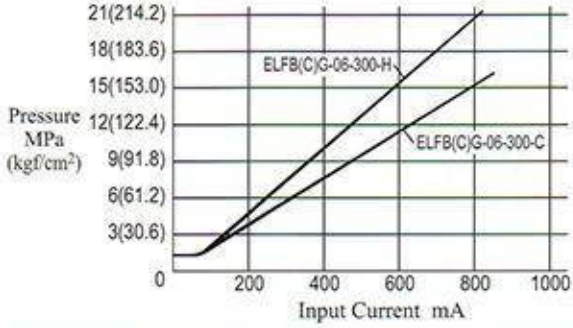

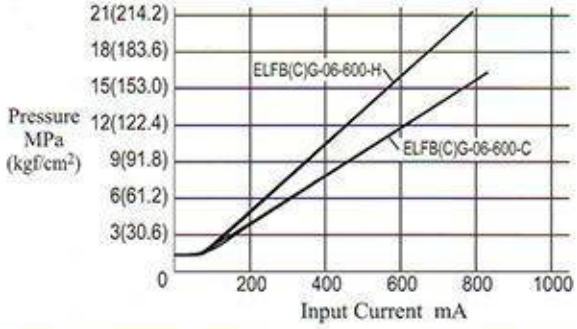

Input Current vs. Pressure (with pressure closed-loop)

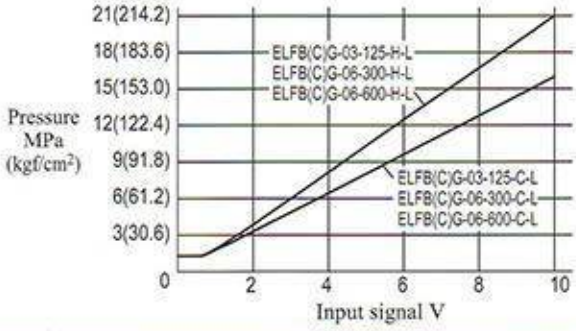

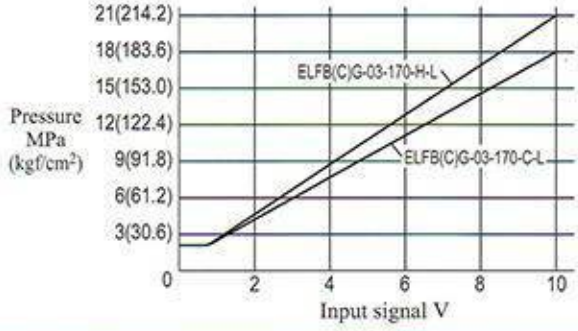

High Performance Proportional Electro-Hydraulic Relief And-Flow Control Valves

Max. Pressure 25 MPa

E

■ELFBG-03
■ELFBCG-03

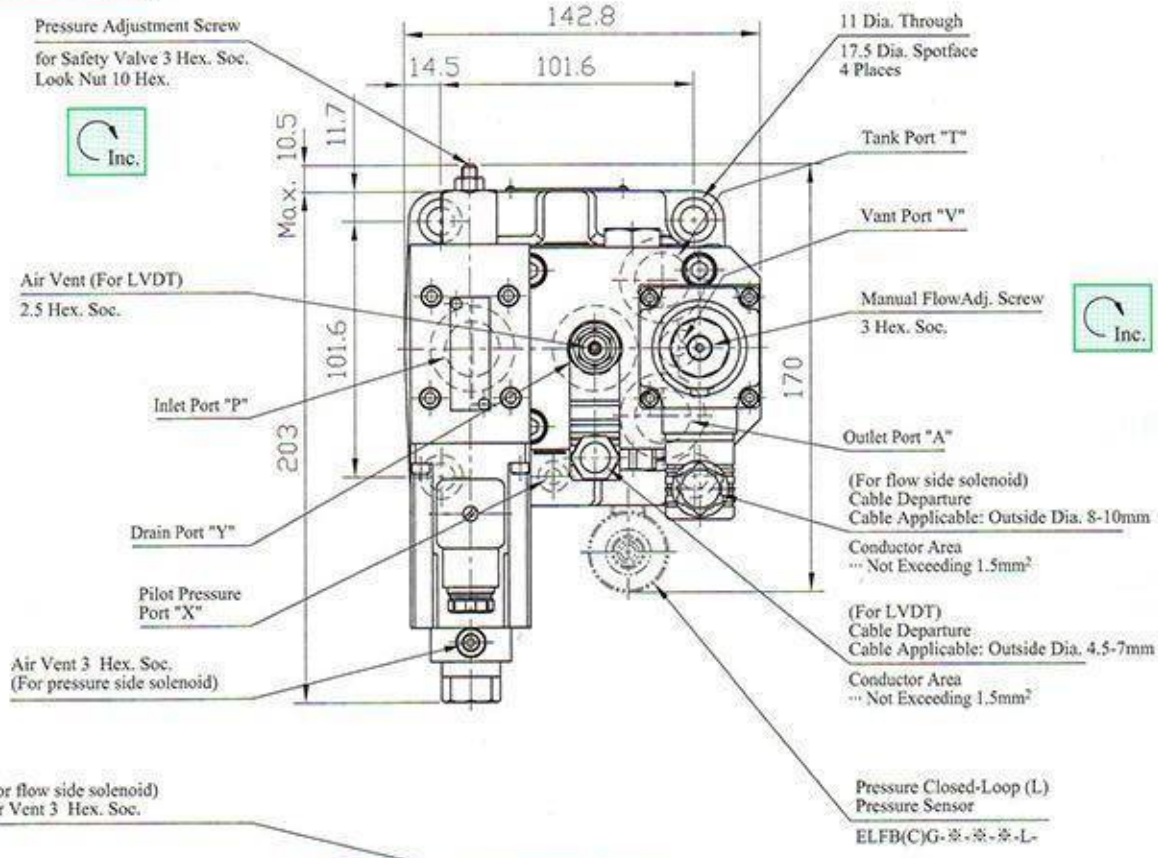

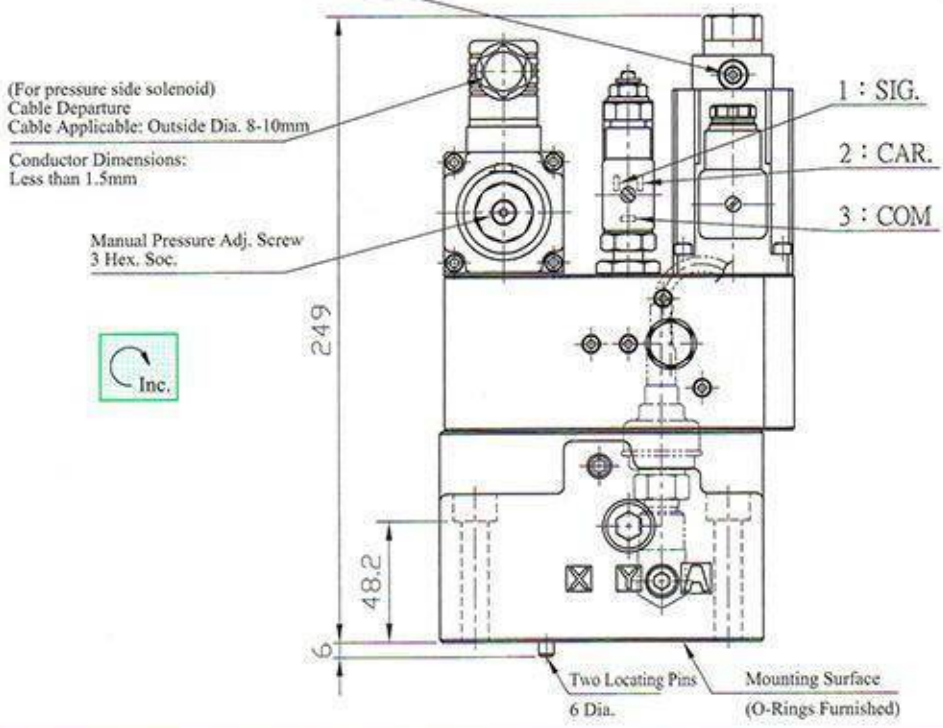

High Performance Proportional Electro-Hydraulic Relief And-Flow Control Valves

Max. Pressure 25 MPa

■ELFBG-06
■ELFBCG-06

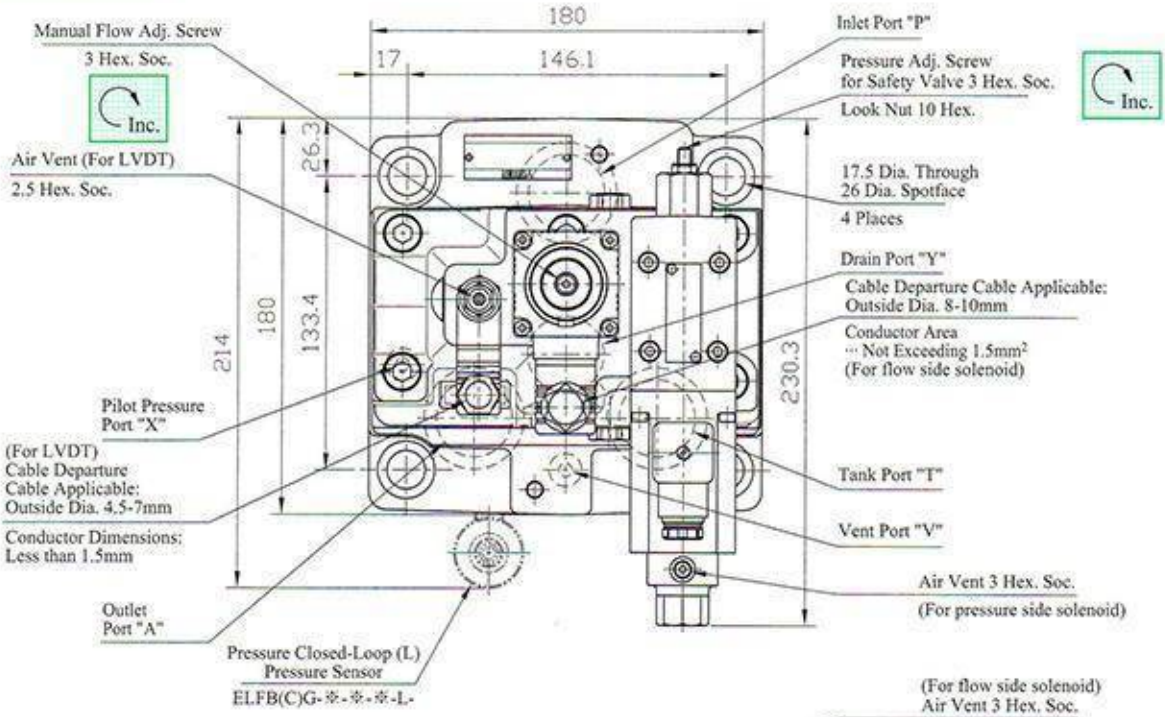

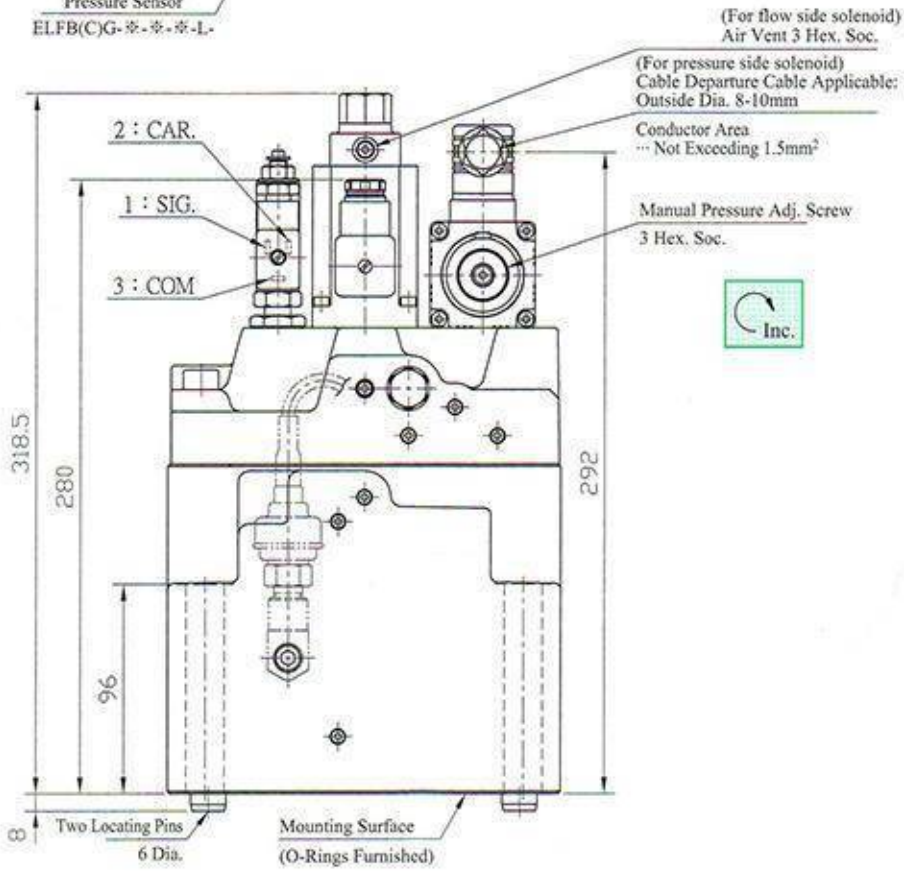

High Performance Proportional Electro-Hydraulic Relief And-Flow Control Valves

Max. Pressure 25 MPa

E

EFBGM-03Y/03Z-20

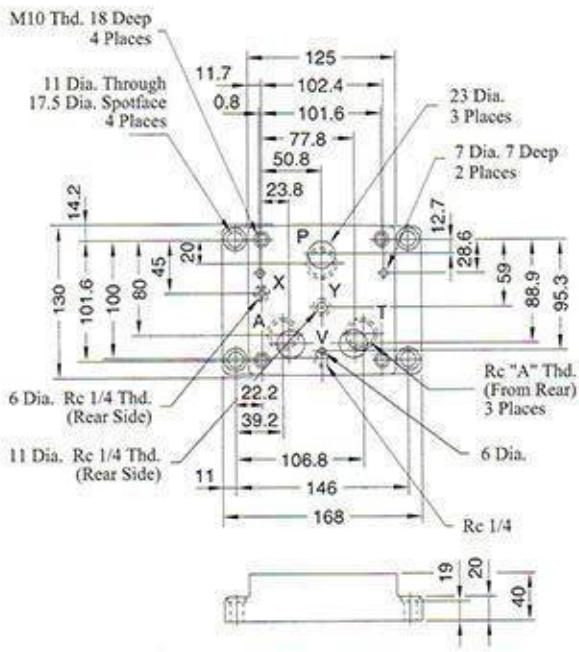

Model Number	A
EFBGM-03Y-20	3/4
EFBGM-03Z-20	1

ELFB(C)G-06

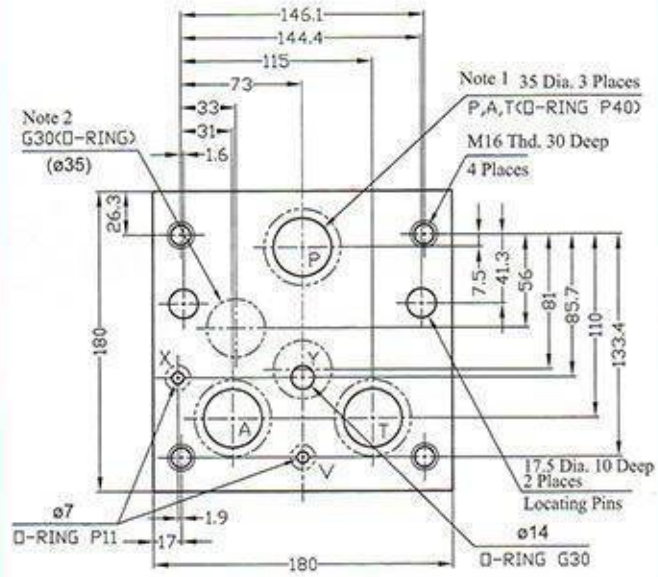

Note: 1. The P,A, T port of the sub-plate should be drilled with Ø35, because the flow passes through ELFB(C)G-06 is big.
Note: 2. Do not drill the position under G30 O-RING, Ø35 on the sub-plate.

Sub-plate

Valve Model No.	Sub-plate Model Number	Thread Size	Approx.Mass kg
ELFB(C)G-03	EFBGM-03Y-20	Rc 3/4	6
	EFBGM-03Z-20	Rc 1	6

Mounting Bolts (Attachment)

Valve Model No.	Socket Heat Cap Screw (4 pcs)	Tightening Torque N•m
ELFB(C)G-03	M10 x 65 Lg	60~74
ELFB(C)G-06	M16 x 120 Lg	253~310

Applicable Power Amplifiers

Model Numbers	Power Amplifier Model Numbers			
	For Flow Control	Page	For Pres. Control	Page
ELFB(C)G-03-125-※	SK1115-1-30T	159	AMN-D-20T	157
ELFB(C)G-03-125-※-L			AMN-D-L-20T	158
ELFB(C)G-03-170-※	SK1115-2-30T	159	AMN-D-20T	157
ELFB(C)G-03-170-※-L			AMN-D-L-20T	158
ELFB(C)G-06-300-※	SK1115-3-30T	159	AMN-D-20T	157
ELFB(C)G-06-300-※-L			AMN-D-L-20T	158
ELFB(C)G-06-600-※	SK1115-4-30T	159	AMN-D-20T	157
ELFB(C)G-06-600-※-L			AMN-D-L-20T	158

Proportional Electro-Hydraulic Directional and Flow Control Valves

Max. Pressure 25 MPa

- These valves are double-deck directional and flow control valves employing as their pilot the electro-hydraulic proportional educing valves with two proportional solenoids.
- The flow rate can be controlled by changing an input current to the solenoids and the direction of the flow can be controlled by providing the current to either solenoid of the two.
- By combining the valves with the power amplifiers specially designed for the valves, the speed control and directional control can be done with a single valve, which eventually makes the hydraulic circuits simple and contributes the cost of the hydraulic systems .

Graphic Symbol

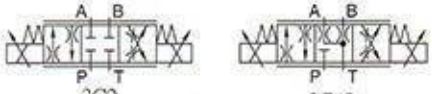

Applicable Power Amplifiers

For stable performance, it is recommended that Yuken's applicable power amplifiers be used AMN-W-10T. (For details see P164.)

Note

- To ensure stable control, bleed the air from solenoid completely and fill the iron core with oil. For this purpose, it is recommended to provide the drain line with a check valve having a cracking pressure about 0.04 MPa.
- T Port back pressure effect the operating ability of the spool directly, so that tank line couldn't be connected with other pipe, must be connected with the tank.
- In the event of an electric fault emergency, a manual shift can be made by screwing in the manual adjustment screw. Take care: however, that this manual shift has no flows adjusting function, only for direction function.

Input current vs Flow

Viscosity: 30mm²/s

Valve pressure difference: 7.0 MPa

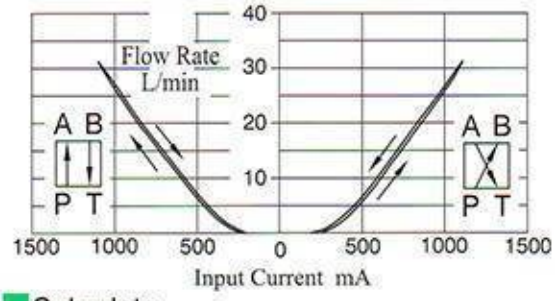

Sub-plate

Sub-plate Model No.	Piping Size (Rc)
DSGM-01-30	1/8
DSGM-01X-30	1/4
DSGM-01Y-30	3/8

- Sub-plate are available. Specify the sub-plate model number from the table above, when sub-plates are not used, , the mounting surface must be process under 6~S (Ra1.6)
- Please refer to page 88 for dimension details.

Specifications

Description	Model No.	EDFG-01
Max Operating Pressure	MPa	25
Rated Flow ★	L/min	30
Rated Current	mA	1100
Max. Tank Line Back Pressure	MPa	14
Coil Resistance	Ω	10
Hysteresis		Less then 5%
Repeatability		Less then 1%
Step Response		Less then 100ms
Approx. Mass	kg	2.4

★1: Rated flow: P → A(B) 、A(B) → T, at valve pressure difference 7.0 MPa

Model Number Designation

EDFG-01-30-3C2-XY-50T

- Series No. EDFG : Proportional Electro-Hydraulic Directional and Flow Control Valves (sub-plate mounting)
- Valve Size 01
- Rated Flow 30 L/min
- Spool Type 3C2 、3C40
- Direction of Flow XY: Meter-in & Meter-out
- Design Number

Valve pressure difference vs Flow

Viscosity: 30mm²/s

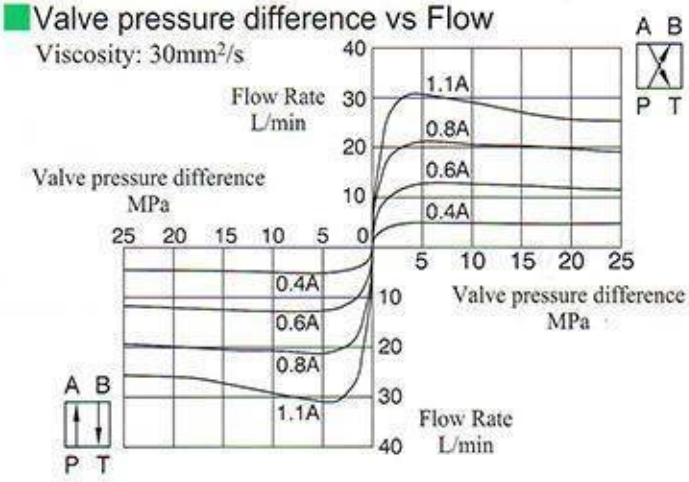

Mounting Bolts (Attachment)

Model No.	Soc. Hd. Cap Screw	Q'ty	Tightening Torque N•m (kgf•m)
EDFG-01	M5 x 45 Lg	4	5~7 (0.5~0.7)

E

Proportional Electro-Hydraulic Directional and Flow Control Valves

Max. Pressure 25 MPa

EDFG-01

Mounting Surface: Comfort to ISO 4401-AB-03-4-A

For valve mounting surface dimensions, see the dimension drawings of sub-plates of DSGM-01, P88 (in common use).

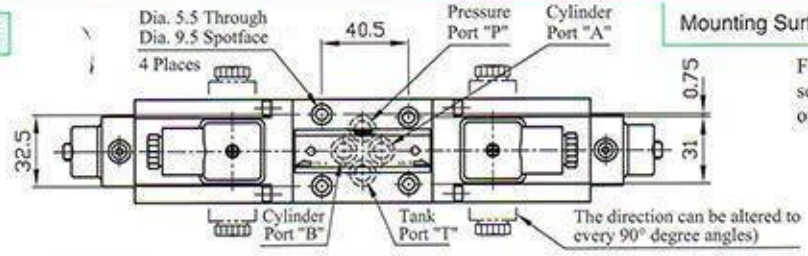

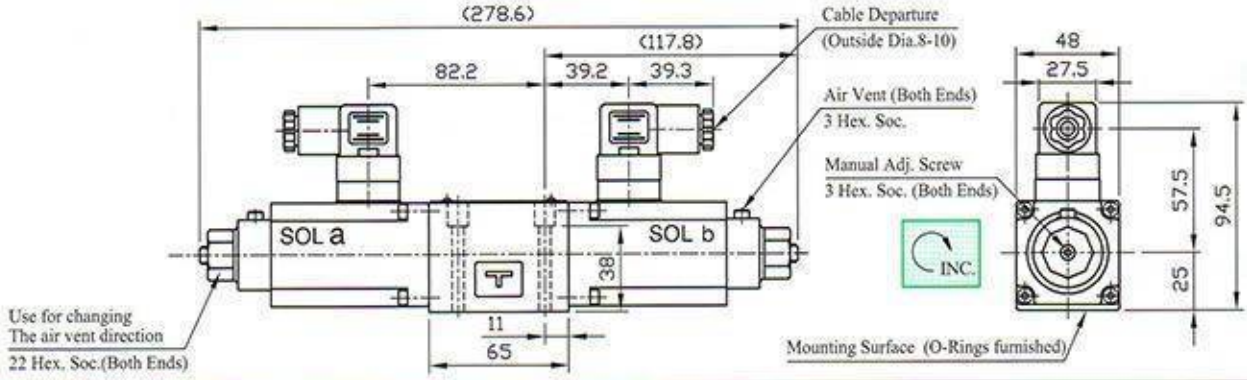

EDFG-01 Wiring Diagram

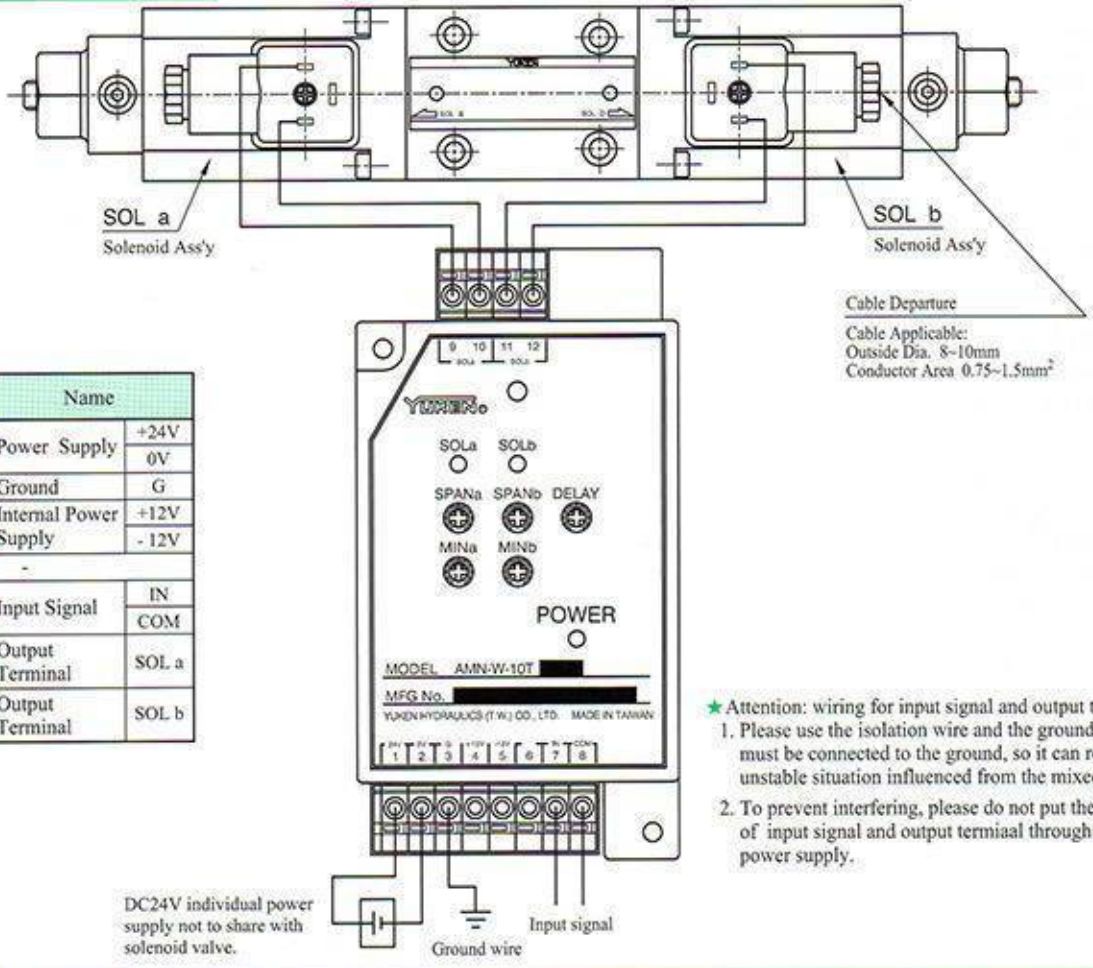

Terminal Number	Name	
1	Power Supply	+24V
2		0V
3	Ground	G
4	Internal Power Supply	+12V
5		- 12V
6	-	
7	Input Signal	IN
8		COM
9	Output Terminal	SOL a
10		
11	Output Terminal	SOL b
12		

★Attention: wiring for input signal and output terminal:

1. Please use the isolation wire and the ground wire must be connected to the ground, so it can reduce the unstable situation influenced from the mixed signals.
2. To prevent interfering, please do not put the wiring of input signal and output termiaal through the main power supply.

Proportional Electro-Hydraulic Directional and Flow Control Valves

Max. Pressure 25 MPa

- These valves are double-deck directional and flow control valves employing as their pilot the electro-hydraulic proportional educing valves with two proportional solenoids.
- The flow rate can be controlled by changing an input current to the solenoids and the direction of the flow can be controlled by providing the current to either solenoid of the two.
- By combining the valves with the power amplifiers specially designed for the valves, the speed control and directional control can be done with a single valve, which eventually makes the hydraulic circuits simple and contributes the cost of the hydraulic systems .

Specification

Description		Model No.	EDFHG-03	EDFHG-04	EDFHG-06
Max Operating Pressure		MPa	25		
Rated Flow	★1	L/min	100	140	280
Pilot Pressure	★2	MPa	1.5 ~16		
Pilot Flow		At Normal	1	1	2
L/min		At Transition	3	4	6
Max. Tank Line Back Pressure		MPa	16	21	
★3 Max. Drain Line Back Pressure		MPa	3.0		
Rated Current		mA	800	980	900
Coil Resistance		Ω	10		
Hysteresis			Less than 5%		
Repeatability			Less than 1%		
Approx. Mass		kg	11	12	15

★1: Rated flow: P→A(B)、A(B)→T, at valve pressure difference 1.0 MPa
★2: Take care to keep the pressure difference between the pilot pressure and drain port back pressure consistently greater than 1.5 MPa.
★3: To obtain staple performance, keep the drain port back pressure lower and minimize its fluctuations.

E

Graphic Symbols

External Pilot Type
External Drain Type

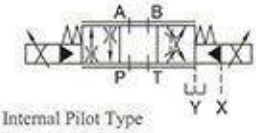

Internal Pilot Type
External Drain Type

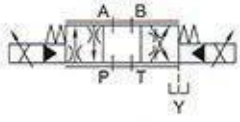

Applicable Power Amplifiers

For stable performance, it is recommended that Yuken's applicable power amplifiers be used AMN-W-10T. (For details see P164.)

Note

- To ensure stable control, bleed the air from solenoid completely and fill the iron core with oil. For this purpose, it is recommended to provide the drain line with a check valve having a cracking pressure about 0.04 MPa.
- In the event of an electric fault emergency, a manual shift can be made by screwing in the manual adjustment screw. Take care: however, that this manual shift has no flows adjusting function, only for direction function.

Mounting Bolts (Attachment)

Model No.	Socket Hd.Cap Screw	Q'TY	Tightening Torque N•m (kgf•m)
EDFHG-03	M6 x 35L	4	12~15 (1.2~1.5)
EDFHG-04	M6 x 45L	2	12~15 (1.2~1.5)
	M10 x 50L	4	58~72 (5.8~7.3)
EDFHG-06	M20 x 75L	6	100~123 (10.2~12.5)

Model Number Designation

EDFHG-03-100-3C2-XY-E-30T

- Series No.
- Valve Size: 03, 04, 06
- Rated Flow: 100 : 100 L/min (03); 140 : 140 L/min (04); 280 : 280 L/min (06)
- Spool Type: 3C2 、3C40
- Direction of Flow: XY: Meter-in & Meter-out
- Pilot Connection: None: Internal Pilot; E: External pilot (Standard); *Only External drain type
- Design Number

Sub-plates

Model No.	Sub-plate Model No.	Thread Size (Rc)
EDFHG-03	DHGM-03Y-10	3/4
EDFHG-04	DHGM-04-20	1/2
	DHGM-04X-20	3/4
EDFHG-06	DHGM-06-50	3/4
	DHGM-06X-50	1

- Sub-plate are available. Specify the sub-plate model number from the table above, when sub-plates are not used, , the mounting surface must be process under 6~S (Ra1.6).
- For dimensions of sub-plates, see page 97 (DHGM-04), page 98 (DHGM-06), page 103 (DHGM-03).

Proportional Electro-Hydraulic Directional and Flow Control Valves

Max. Pressure 25 MPa

E

Input Current vs. Flow

Viscosity:30mm²/s

Valve Pressure Difference : P → A (B) , B (A) → T 1 MPa

EDFHG-03

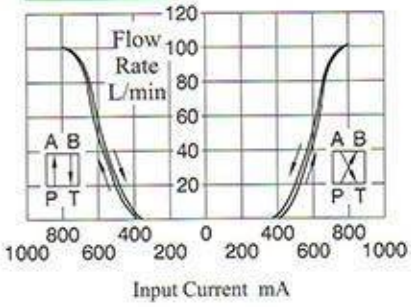

EDFHG-04

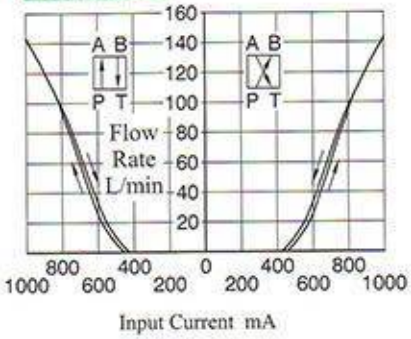

EDFHG-06

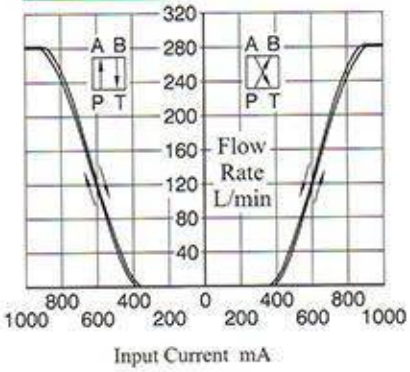

Valve Pressure Difference vs. Flow

Viscosity:30mm²/s

EDFHG-03

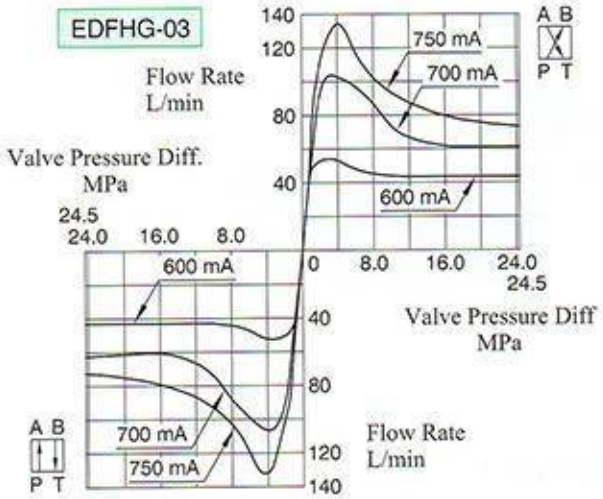

EDFHG-04

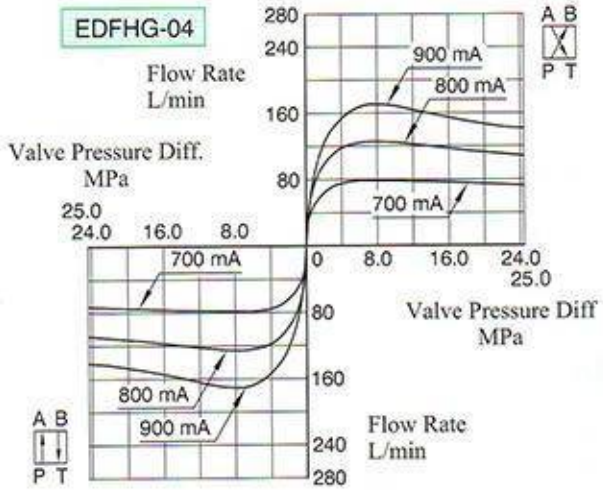

EDFHG-06

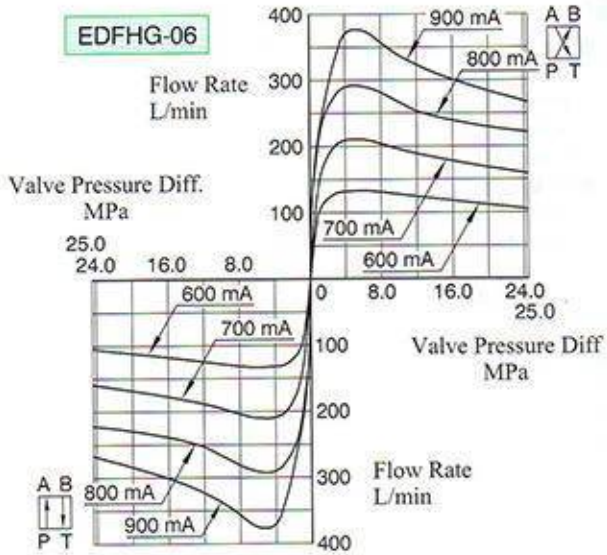

Proportional Electro-Hydraulic Directional and Flow Control Valves

Max. Pressure 25 MPa

Step Response

Viscosity:30mm²/s

These characteristics have been obtained by measuring on each valve.
Therefore, they may vary according to hydraulic circuit to be used.

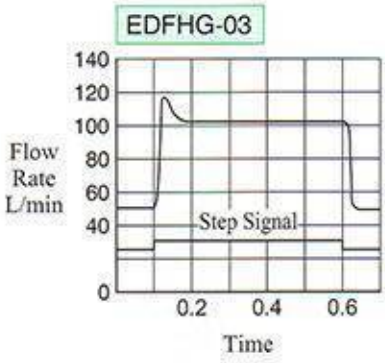

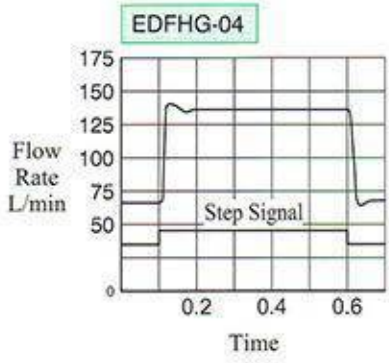

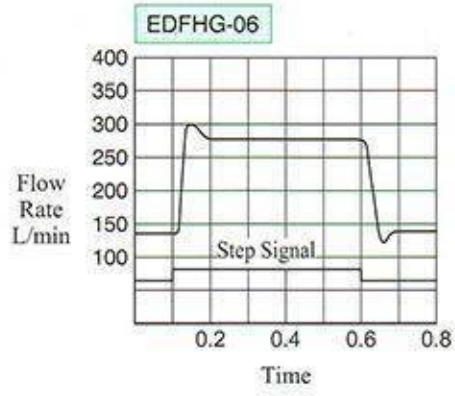

E

EDFHG-03-※-

Mounting Surface: Comfort to ISO 4401-05-05-0-94

For valve mounting surface dimensions, see the dimension drawings of sub-plates of DHGM-03, P103 (in common use).

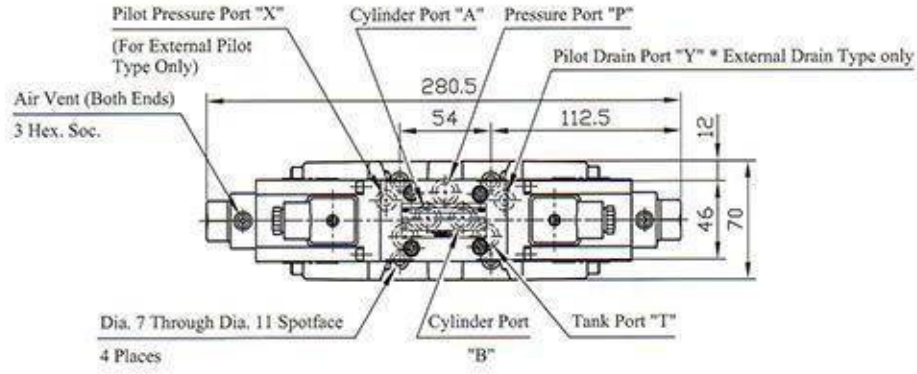

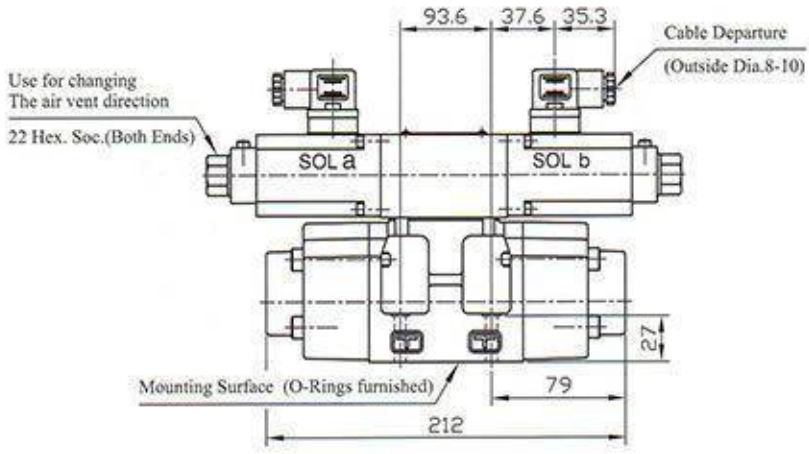

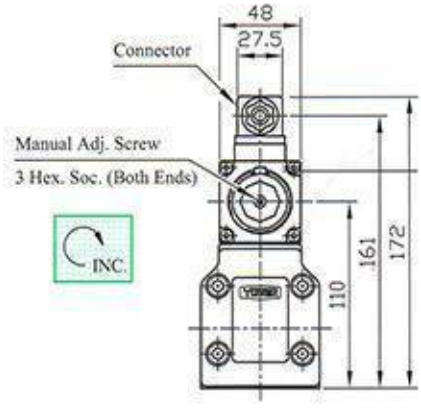

Proportional Electro-Hydraulic Directional and Flow Control Valves

Max. Pressure 25 MPa

E

EDFHG-04-※-

Mounting Surface: Comfort to ISO 4401-AD-07-4-A-80

For valve mounting surface dimensions, see the dimension drawings of sub-plates of DHGM-04, P97 (in common use).

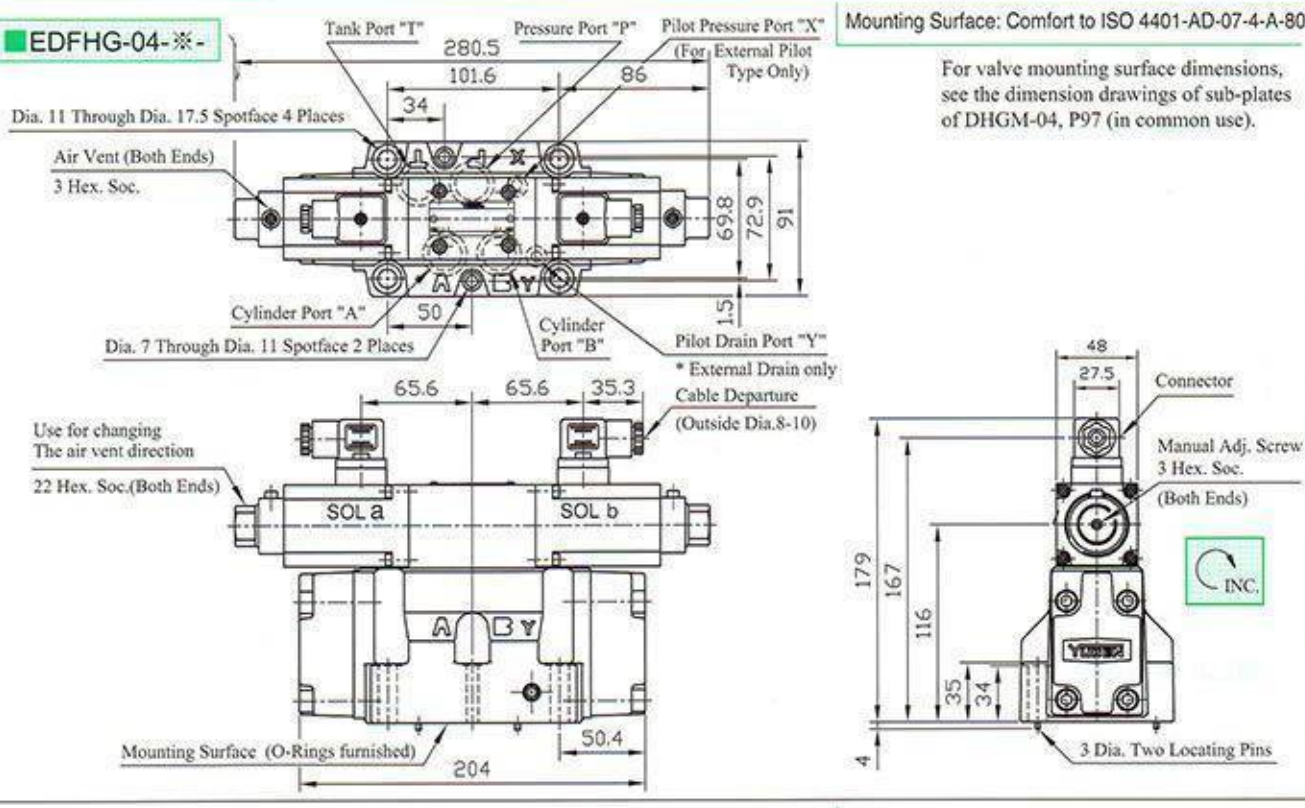

EDFHG-06-※-

Mounting Surface: Comfort to ISO 4401-AE-08-4-A-80

For valve mounting surface dimensions, see the dimension drawings of sub-plates of DHGM-06, P98 (in common use).

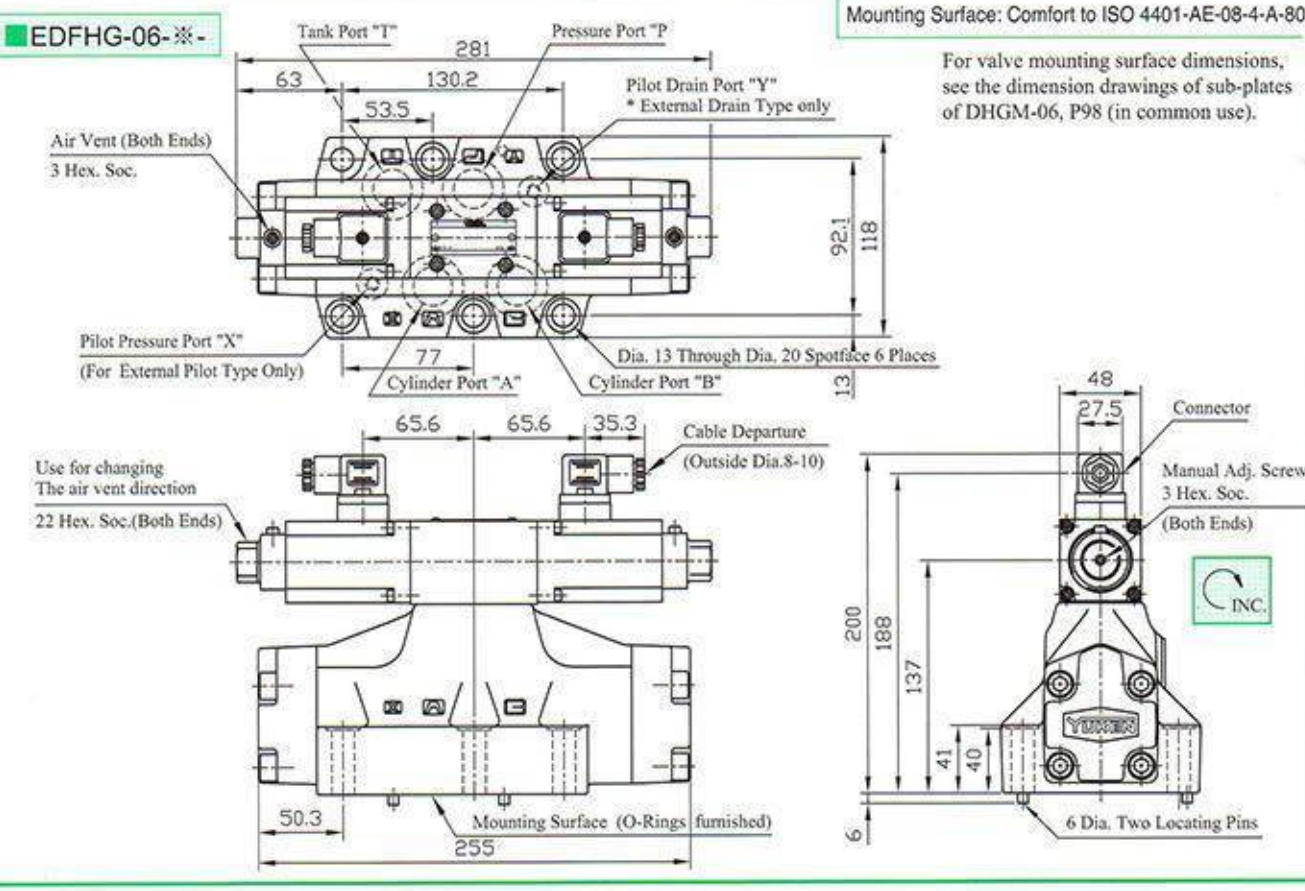

Proportional Electro-Hydraulic Directional and Flow Control Valves

Max. Pressure 25 MPa

EDFHG-03 / 04 / 06 Wiring Diagram

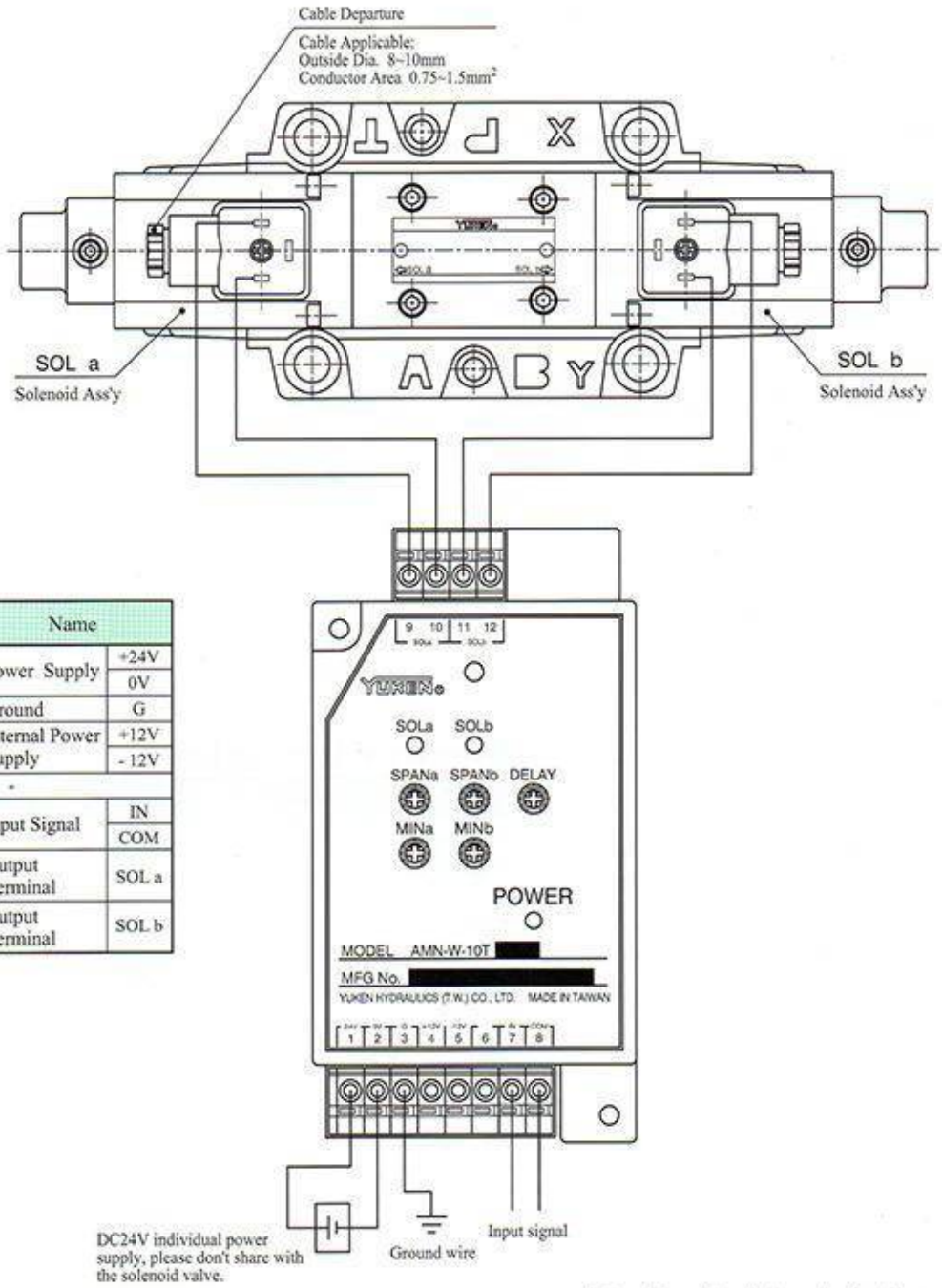

Terminal Number	Name	
1	Power Supply	+24V
2		0V
3	Ground	G
4	Internal Power Supply	+12V
5		- 12V
6	-	
7	Input Signal	IN
8		COM
9	Output Terminal	SOL a
10		
11	Output Terminal	SOL b
12		

★Attention: wiring for input signal and output terminal:

1. Please use the isolation wire and the ground wire must be connected to the ground, so it can reduce the unstable situation influenced from the mixed signals.
2. To prevent interfering, please do not put the wiring of input signal and output termiaal through the main power supply.

Power Amplifiers

AME-D2-H1 Series

For Power Saving

These power amplifiers are specially designed to drive the valves incorporating the functions of pressure control (10Ω solenoid) and flow control (43.5Ω solenoid). It can be used for the proportional electro-hydraulic control valves of which model numbers are as shown on the table of "Applicable to valve" below.

Specifications (Made by Yuken Kogyo)

Description \ Model No.	AME-D2-H1-※-12	
	Flow Controls	Press. Controls
Type of Function	DC Input Type	
Max. Output Current	0.8A(43.5Ω Solenoid)	1A(10Ω Solenoid)
Max. Input Voltage	DC+10V	
Input Impedance	10KΩ	
Max. Gain	0.8A/5V	1A/5V
Dither	Fix	
Temperature Drift (Max.)	0.2mA/°C	
Power Supply	AC100V・AC200V/200V±10% (50/60Hz)	
Power Input	Max. 130VA	
Ambient Temperature	0~50°C	
External Setting Resistance	1KΩ	
Mass	5.6kg	

Model Number Designation

AME-D2-H1-100-12

- Series Number
- Type of Function
  D: DC Input Type
- Type of Mounting
  H1: Wall Tapestry Type
- Power Supply
  100: AC100V
  200: AC200/220V
- Design Number

Applicable to valve

Name	Model No.
Power Saving Valve	EFBG-06-※-C/H-20T (03 / 10)

AME-D2-H1

(Example Diagram)

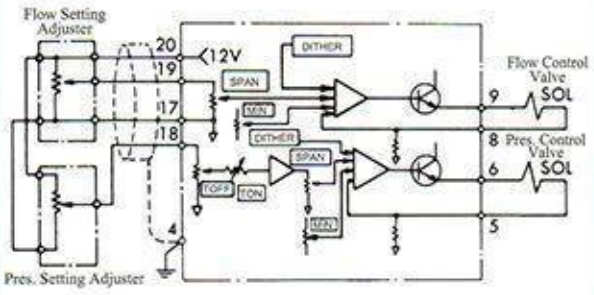

Details of Terminal Board

Terminal Number	Name		Terminal Number	Name	
1	Power Supply AC100V, AC200V:1,2 AC220V:1,3		11	Common	COM
2			12		
3			13		
4	Earth	G	14	-12V OUT	-12V
5	Output to Pressure Control Valve Solenoid	SOL	15	Common	COM
6			16	+12V OUT	+12V
7	Ammeter		17	Common	COM
8	Output to Flow Control Valve Solenoid	SOL	18	Input Signal for Pres.	PR.IN
9			19	Input Signal for Flow	FL.IN
10	Ammeter		20	+12V OUT	+12V

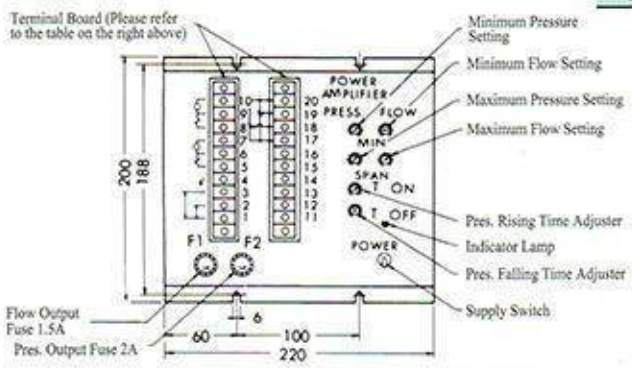

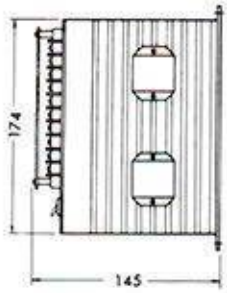

Power Amplifiers

Compact power amplifiers are for 10Ω proportional solenoids. The power supply is 24V DC. It uses a new circuitry to be slow to heat..

Specifications

Description \ Model No.	AMN-D-20T
Type of Function	DC Input Type
Max. Output Current	1A(10Ω Solenoid)
Power Input (Max.)	DC+10V
Input Impedance	10KΩ
Max. Gain	1A/5V
Dither	Variable
Temperature Drift (Max.)	0.2mA/°C
Power Supply	DC 24V (DC 20~30V)
Max. Input Power	25W
Ambient Temperature	0~50°C
External Setting Resistance	1KΩ
Approx. Mass	0.1 kg

Model Number Designation

AMN	-D	-20T
Series Numbers	Type of Function	Design Number
AMN	D: DC Input Type	20T

Applicable to Valve

Name of Valve	Model Numbers
Pilot Relief Valve	EDG-01
Relief Valves	EBG-03 EBG-06 ※ EBG-10
Reducing and Relieving Valves	※ ERBG-06 ※ ERBG-10
10Ω Series Flow Control Valves	※ EF(C)G-03-※-51D ※ EF(C)G-03-※-51D
10Ω Series High Flow Series Flow Control and Relief Valves	EFBG-03 EFBG-06 EFBG-10 ELFB(C)G-03 ELFB(C)G-06

※Yuken Kogyo Models

E

AMN-D-20T

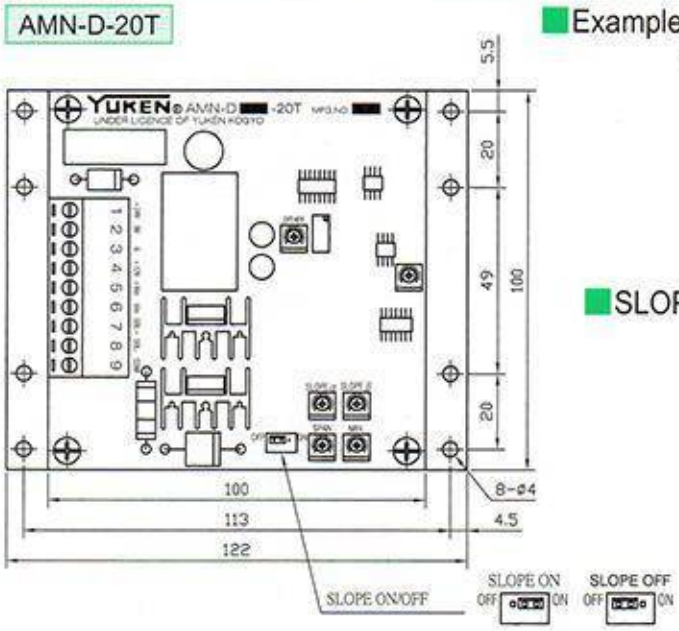

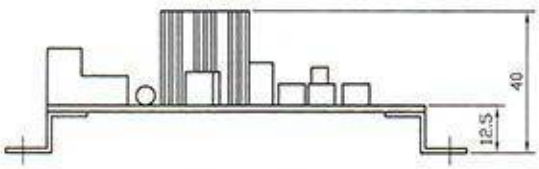

※We do not adjust the MIN and SPAN of the amplifier exwork, please adjust it while operating the amplifier.

Example Diagram

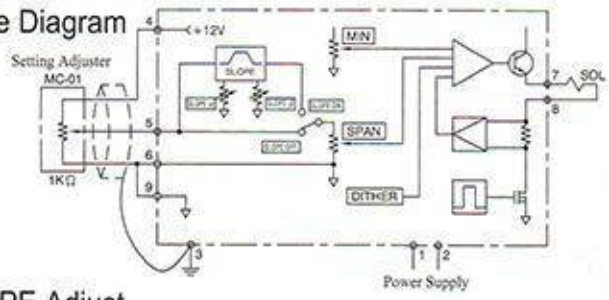

SLOPE Adjust

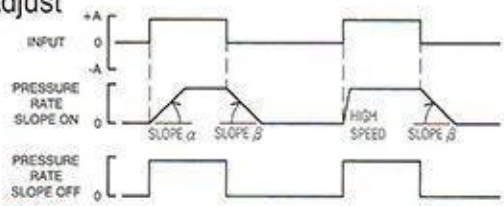

Details of Terminal Board

Terminal Number	Mame	
1	Power Supply	+24V
2		0V
3	Ground	G
4	Internal Power Supply	+12V
5	Input Signal	+Vin
6		-Vin
7	Output to Valve Solenoid	SOL+
8		SOL -
9	Common	COM

★Please connect input signal with+Vin and-Vin, please do not connect+Vin and COM.

Power Amplifiers

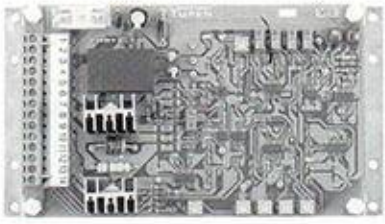

The pressure-response AMP is designed for high response & high precision ELFB(C)G and the power supply is DC24V, It uses a new circuit to be slow to heat, a perfect control.

Specifications

Model No. / Description	AMN-D-L-20T
Max. Output Current	1A(10Ω Solenoid)
Power Input (Max.)	DC10V
Input Impedance	DC0.5~4.5V
Max. Gain	10KΩ
Dither	1A/5V
Temperature Drift (Max.)	Variable
Power Supply	Max. 0.2mA/°C
Max. Input Power	DC 24V (DC 20~30V)
Ambient Temperature	0~50°C
External Setting Resistance	1KΩ
Approx. Mass	0.3 kg

Applicable to Valve

Name of Valve	Model Number
10Ω Series High Flow Series Flow Control and Relief Valve	ELFB(C)G-※-※-L-20T

Model Number Designation

AMN - D - L - 20T

- 20T — Design Number
- L — Pressure Closed-Loop
- D — DC Input Type
- AMN — Series Number

E

AMN-D-L-20T

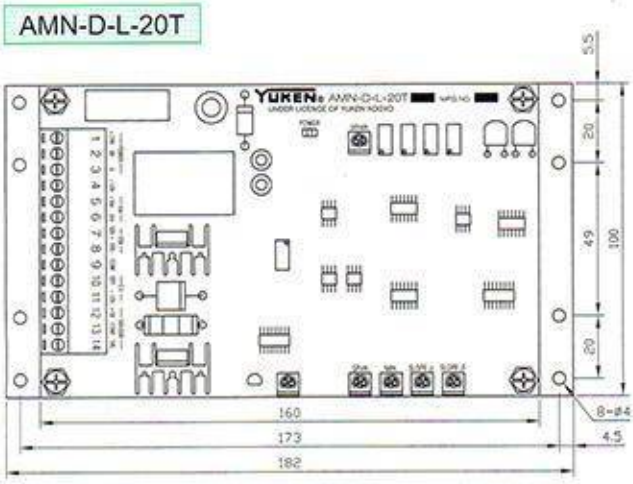

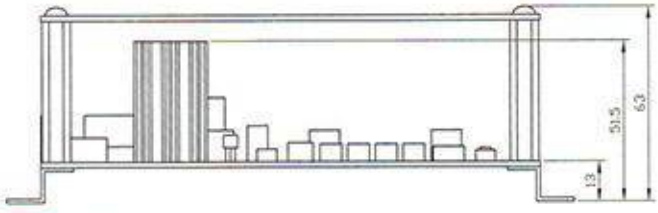

SLOPE Adjust

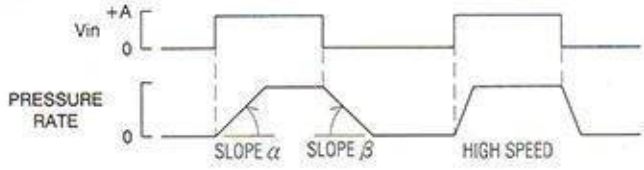

Example Diagram

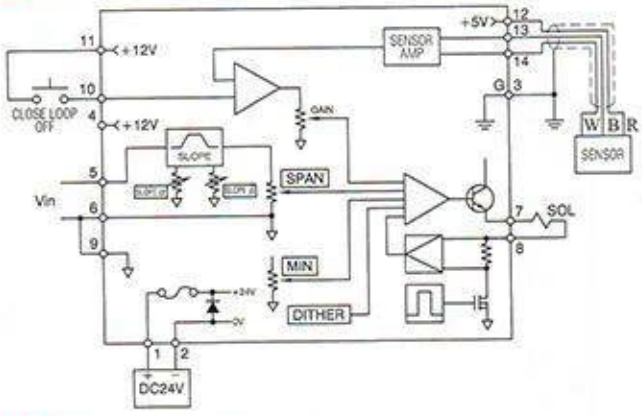

Details of Terminal Board

Terminal Number	Name		Terminal Number	Name	
1	Power Supply	+24V	7	Output to Valve Solenoid	SOL +
2		0V	8		SOL -
3	Ground	G	9	Common	COM
4	Internal Power Supply	+12V	10	CLOSE LOOP ON/OFF	OFF
5	Input Signal	+ Vin	11		+ 12V
6		- Vin	12	Pressure Sensor	+ 5V
			13		COM
			14		SIG.

★1. Please connect input signal with+Vin and-Vin, please do not connect+Vin and COM
★2. We do not adjust the MIN and SPAN of the amplifier exwork, please adjust it while operating the amplifier..
★3. If pressure checking wires need to be extended, please use conductor area small than 1.5mm² isolation wires and make sure the total length can not be over 10m.

Power Amplifiers

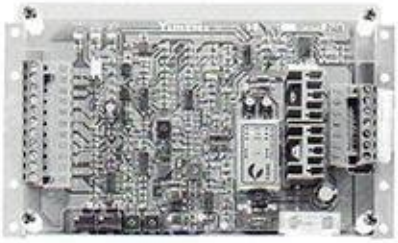

The flow-response AMP is designed for high response & high precision ELFB(C)G and the power supply is DC24V, It uses a new circuit to be slow to heat, a perfect control.

Specifiations

Description \ Model No.	SK1115-※-30T
Max. Output Current	2.5A
Power Input (Max.)	DC+10V
Input Impedance	More than 10KΩ
Max. Gain	Max. St/5V
Power Supply	DC 24V (DC 20~30V)
S.M. Signal Output	-0.5V/1mm St
Alarm Signal Output	Max DC30V.10mA
Ambient Temperature	0-50°C
Ambient Humidity	less than 90%RH
Approx. Mass	0.3 kg

Applicable to Valve

Model Numbers	Power Amplifiers
ELFB(C)G-03-125-※-※-20T	SK1115-1-30T
ELFB(C)G-03-170-※-※-20T	SK1115-2-30T
ELFB(C)G-06-300-※-※-20T	SK1115-3-30T
ELFB(C)G-06-600-※-※-20T	SK1115-4-30T

E

Model Number Designation

SK1115 -1- 30T

Series Number

Applicable Valve

Design Number

1: ELFB(C)G-03-125-※-※-20T
2: ELFB(C)G-03-170-※-※-20T
3: ELFB(C)G-06-300-※-※-20T
4: ELFB(C)G-06-600-※-※-20T

SK1115-※-30T

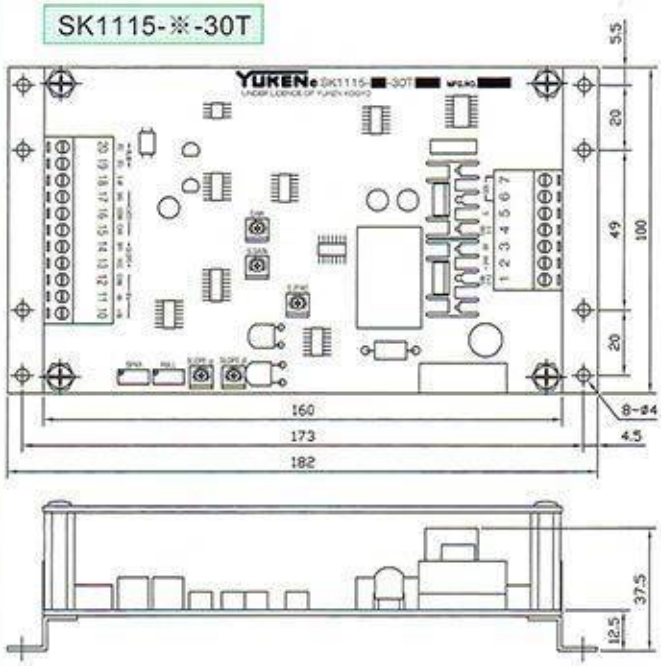

SLOPE Adjust

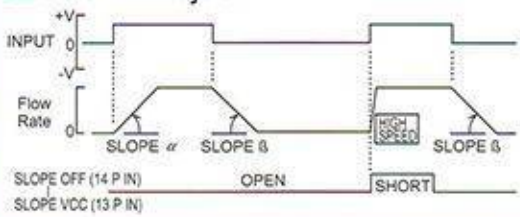

Example Diagram

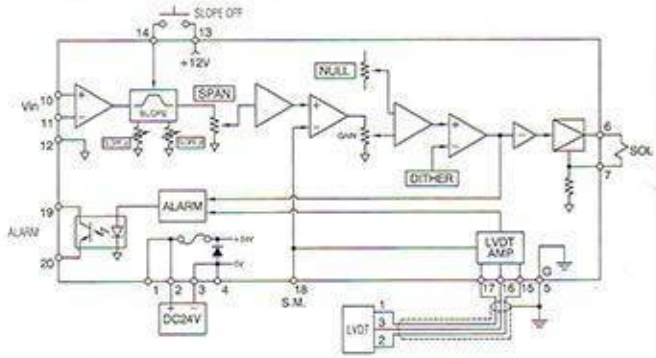

Details of Terminal Board

Terminal Number	Name		Terminal Number	Name	
1	Power Supply	CAPACTIOR(+)	10	Input Signal	+IN
2		+24V	11		-IN
3		0V	12	Common	COM
4		CAPACTIOR(-)	13	SLOPE	VCC
5	Ground	G	14		OFF
6	Output to Valve Solenoid	SOL(+)	15	LVDT Terminal	CAR.
7		SOL(-)	16		COM
			17		SIG
			18	Sensor Monitor Output	S.M
			19	ALARM Signal Output	ALM(C)
			20		ALM(E)

★Please connect input signal with +IN and-IN, please do not connect+IN and COM.

Wiring Diagram

ELFB(C)G-03-※-Wiring Diagram

Amplifier for pressure control (AMN-D-20T)

Terminal Number	Name	
1	Power Supply	+24V
2		0V
3	Ground	G
4	Internal Power Supply	+12V
5	Input Signal	+Vin
6		-Vin
7	Output to Valve Solenoid	SOL +
8		SOL -
9	Common	COM

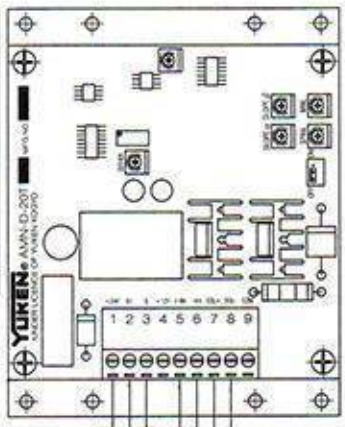

DC24V individual power supply not to share with solenoid valve.

Pressure Signal

Amplifier for flow control (SK1115-※-30T)

Terminal Number	Name	
1	Power Supply	C AP.(+)
2		+ 24V
3		0V
4		CAP.(-)
5	Ground	G
6	Output to Valve Solenoid	SOL(+)
7		SOL(-)
10	Input Signal	+IN
11		-IN
12	Common	COM
13	SLOPE ON/OFF ★	VCC
14		OFF
15	LVDT Terminal	CAR.
16		COM
17		SIG
18	Sensor Monitor Output	S.M
19	ALARM Signal Output	ALM(C)
20		ALM(E)

★Conducted will be Slope off

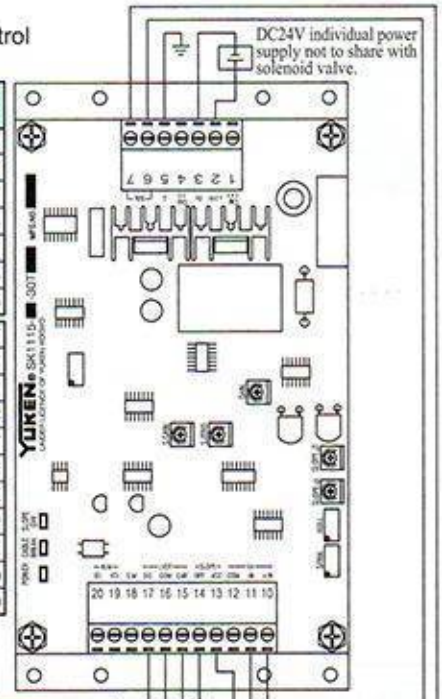

DC24V individual power supply not to share with solenoid valve.

Terminal Number	Name	
	LVDT	AMP.
SIG.	1	17
CAR.	2	15
COM	3	16

SLOPE ON/OFF

Flow Signal

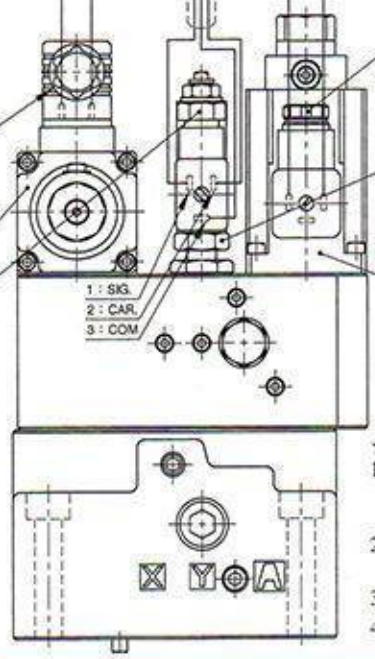

Cable Departure
Cable Applicable:
Outside Dia.··· 8~10mm
Conductor Area···
Not Exceeding 1.5mm²

Pressure control coil

Cable Departure
Cable Applicable:
Outside Dia.··· 4.5~7mm
Conductor Area···
Not Exceeding 1.5mm²

1 : SIG.
2 : CAR.
3 : COM

Cable Departure
Cable Applicable:
Outside Dia.··· 8~10mm
Conductor Area··· Not Exceeding 1.5mm²

Flow sensors
Don't ture the nut of LVDT.

Flow control coil

★Attention: wiring for the pressure, flow signal and LVDT response

1. Please use the isolation wire and the ground wire must be connected to the ground so it can reduce the unstable situation influenced from the mixed signals.
2. To prevent interfering, please do not put the wiring of pressure, flow signal and LVDT response through the main power supply.
3. The wiring of LVDT respones should be as short as possible.
4. The terminal wiring of amplifier and LVDT should be correct.

Wiring Diagram

ELFB(C)G-03-※-L-Wiring Diagram

Amplifier for pressure control (AMN-D-L-20T)

Terminal Number	Name	
1	Power Supply	+24V
2		0V
3	Ground	G
4	Internal Power Supply	+12V
5	Input Signal	+Vin
6		-Vin
7	Output to Valve Solenoid	SOL+
8		SOL -
9	Common	COM
10	CLOSE LOOP ON/OFF ★	OFF
11		+12V
12	Pressure Sensor	-5V
13		COM
14		SIG.

★Conducted will be Close-loop off

Amplifier for flow control (SK1115-※-30T)

Terminal Number	Name	
1	Power Supply	C AP.(+)
2		+ 24V
3		0V
4		CAP.(-)
5	Ground	G
6	Output to Valve Solenoid	SOL(+)
7		SOL(-)
10	Input Signal	+IN
11		-IN
12	Common	COM
13	SLOPE ON/OFF ★	VCC
14		OFF
15	LVDT Terminal	CAR.
16		COM
17		SIG
18	Sensor Monitor Output	S.M
19	ALARM Signal Output	ALM(C)
20		ALM(E)

★Conducted will be Slope off

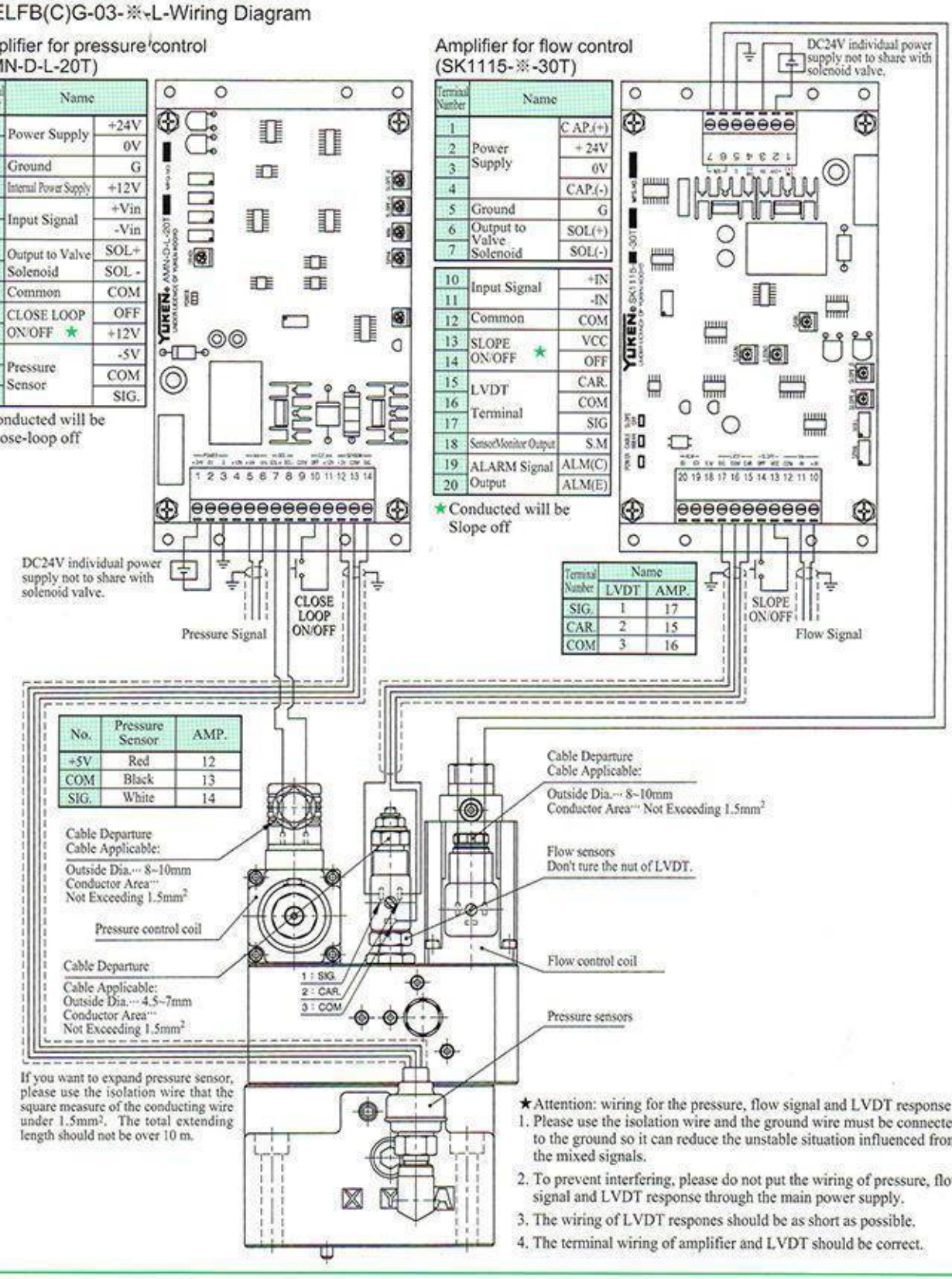

Terminal Number	Name	
	LVDT	AMP.
SIG.	1	17
CAR.	2	15
COM	3	16

No.	Pressure Sensor	AMP.
+5V	Red	12
COM	Black	13
SIG.	White	14

If you want to expand pressure sensor, please use the isolation wire that the square measure of the conducting wire under 1.5mm². The total extending length should not be over 10 m.

★Attention: wiring for the pressure, flow signal and LVDT response

1. Please use the isolation wire and the ground wire must be connected to the ground so it can reduce the unstable situation influenced from the mixed signals.
2. To prevent interfering, please do not put the wiring of pressure, flow signal and LVDT response through the main power supply.
3. The wiring of LVDT respones should be as short as possible.
4. The terminal wiring of amplifier and LVDT should be correct.

E

Wiring Diagram

■ELFB(C)G-06-※-Wiring Diagram

Amplifier for flow control (SK1115-※-30T)

Terminal Number	Name	
1	Power Supply	C AP.(+)
2		+24V
3		0V
4		CAP.(-)
5	Ground	G
6	Output to Valve Solenoid	SOL(+)
7		SOL(-)
10	Input Signal	+IN
11		-IN
12	Common	COM
13	SLOPE ON/OFF ★	VCC
14		OFF
15	LVDT Terminal	CAR.
16		COM
17		SIG
18	SensorMonitor Output	S.M
19	ALARM Signal Output	ALM(C)
20		ALM(E)

★Conducted will be Slope off

Terminal Number	Name	
	LVDT	AMP.
SIG.	1	17
CAR.	2	15
COM	3	16

Amplifier for pressure control (AMN-D-20T)

Terminal Number	Name	
1	Power Supply	+24V
2		0V
3	Ground	G
4	Internal Power Supply	+12V
5	Input Signal	+Vin
6		-Vin
7	Output to Valve Solenoid	SOL +
8		SOL -
9	Common	COM

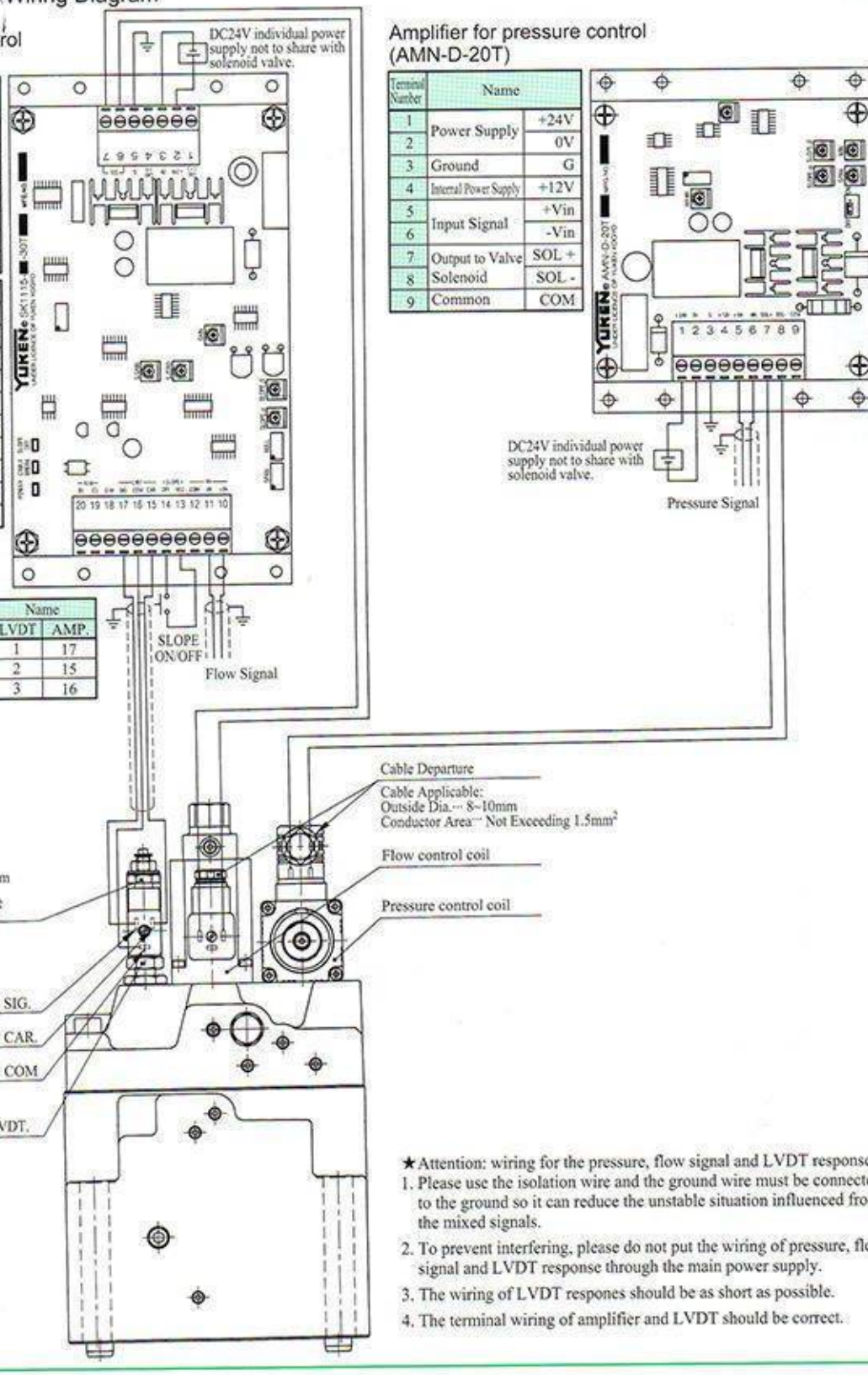

★Attention: wiring for the pressure, flow signal and LVDT response

1. Please use the isolation wire and the ground wire must be connected to the ground so it can reduce the unstable situation influenced from the mixed signals.
2. To prevent interfering, please do not put the wiring of pressure, flow signal and LVDT response through the main power supply.
3. The wiring of LVDT respones should be as short as possible.
4. The terminal wiring of amplifier and LVDT should be correct.

E

Wiring Diagram

ELFB(C)G-06-※-L-Wiring Digram

Amplifier for flow control (SK1115-※-30T)

Terminal Number	Name	
1	Power Supply	C.AP.(+)
2		+24V
3		0V
4		CAP.(-)
5	Ground	G
6	Output to Valve Solenoid	SOL(+)
7		SOL(-)
10	Input Signal	+IN
11		-IN
12	Common	COM
13	SLOPE ON/OFF ★	VCC
14		OFF
15	LVDT Terminal	CAR.
16		COM
17		SIG
18	SensorMonitor Output	S.M
19	ALARM Signal Output	ALM(C)
20		ALM(E)

★Conducted will be Slope off

Terminal Number	Name	
	LVDT	AMP.
SIG.	1	17
CAR.	2	15
COM	3	16

Amplifier for pressure control (AMN-D-L-20T)

Terminal Number	Name	
1	Power Supply	+24V
2		0V
3	Ground	G
4	Internal Power Supply	+12V
5	Input Signal	+Vin
6		-Vin
7	Output to Valve Solenoid	SOL +
8		SOL -
9	Common	COM
10	CLOSE LOOP ON/OFF ★	OFF
11		+12V
12	Pressure Sensor	+5V
13		COM
14		SIG.

★Conducted will be Close-loop off

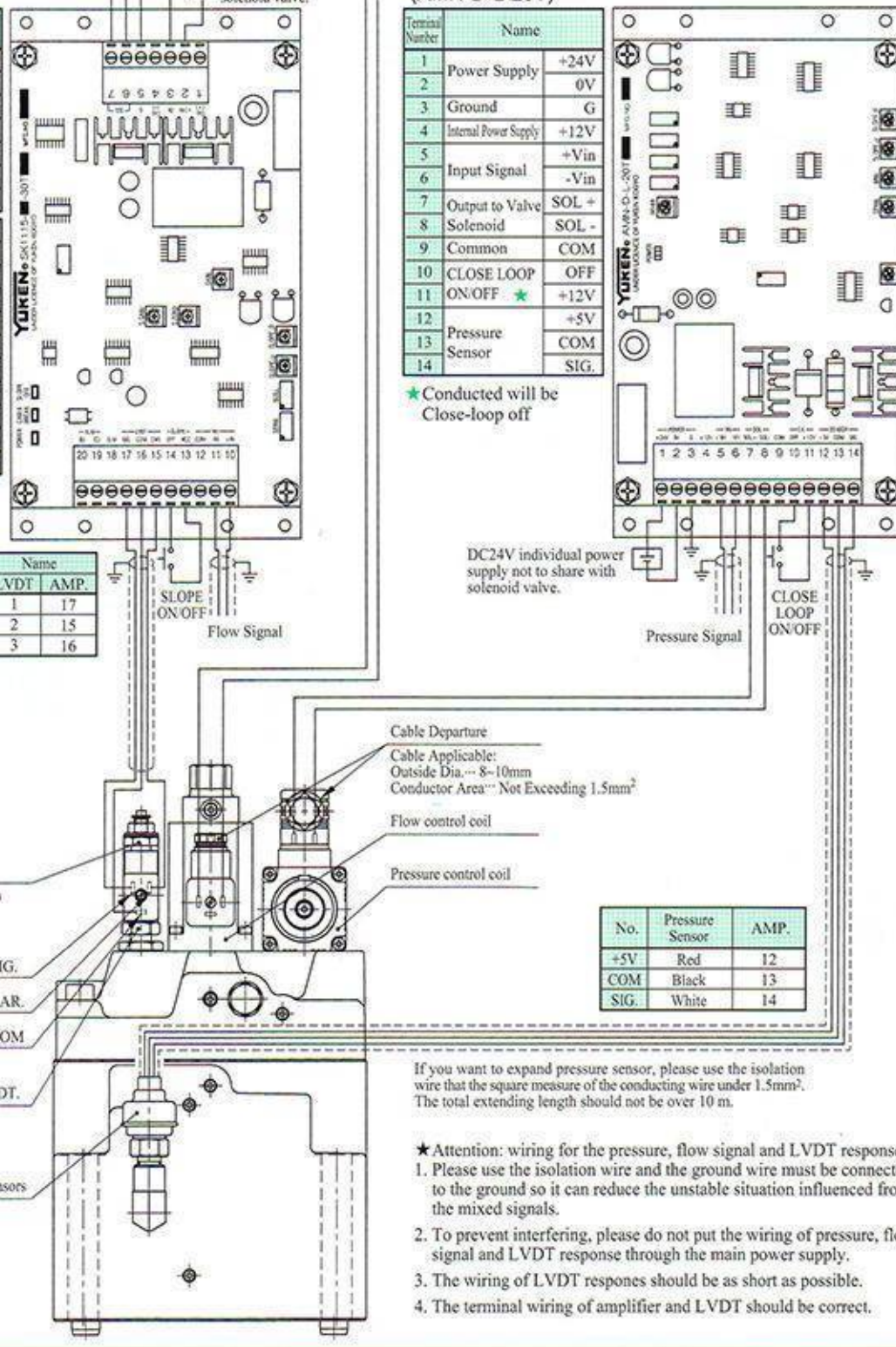

No.	Pressure Sensor	AMP.
+5V	Red	12
COM	Black	13
SIG.	White	14

If you want to expand pressure sensor, please use the isolation wire that the square measure of the conducting wire under 1.5mm². The total extending length should not be over 10 m.

★Attention: wiring for the pressure, flow signal and LVDT response

1. Please use the isolation wire and the ground wire must be connected to the ground so it can reduce the unstable situation influenced from the mixed signals.
2. To prevent interfering, please do not put the wiring of pressure, flow signal and LVDT response through the main power supply.
3. The wiring of LVDT respones should be as short as possible.
4. The terminal wiring of amplifier and LVDT should be correct.

E

Power Amplifiers

- The power amplifier is applicable to the DC input type of proportional electro-hydraulic directional and flow control valves.

Specifications

Description \ Model No.	AMN-W-10T
Type of Function	DC Input Type
Max. Output Current	1.3A(10Ω Solenoid)
Max. Power Input	-10V DC SOL a
	+10V DC SOL b
Input Impedance	10 kΩ
Max. Gain	1.3 A /-5V : SOL a
	1.3 A /+5V : SOL b
Dither	Variable
Delay Adj. Range	0.1 ~ 3 s
Temperature Drift	0.2mA / °C
Power Supply	DC 24V (DC 20~30V)
Ambient Temperature	25
Max. Input Power	0~50°C
Ambient Humidity	Less than 90% RH
Approx. Mass	0.2 kg

Model Number Designation

AMN - W - 10T

- 10T: Design Number
- W: Type of Function, W : DC Input Type
- AMN: Series Number

Applicable to Valve

Name of Valve	Model Numbers
Proportional Electro-Hydraulic Directional and Flow Control Valve	EDFG-01-※
	EDFHG-03-※
	EDFHG-04-※
	EDFHG-06-※

E

AMN-W-10T

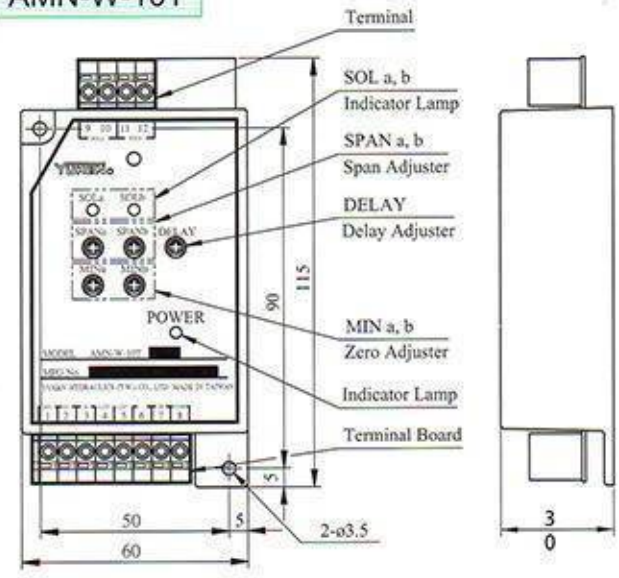

Details of Terminal Board

Terminal Number	Name		Terminal Number	Name	
1	Power Supply	+24V	7	Input Signal	IN
2		0V	8		COM
3	Ground Internal Power Supply	G	9	Output to Valve Solenoid	SOL a
4	Input Signal	+12V	10		
5		- 12V	11	Output to Valve Solenoid	SOL b
6	–		12		

Example Diagram

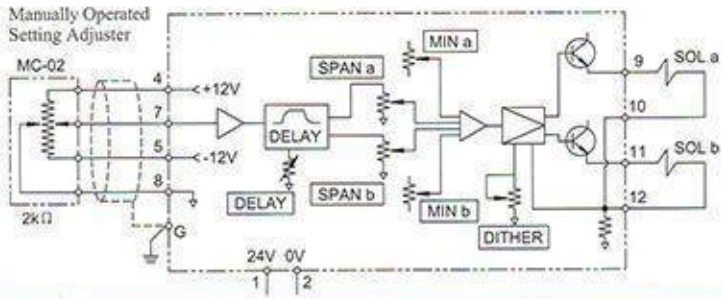

DELAY Ajustment

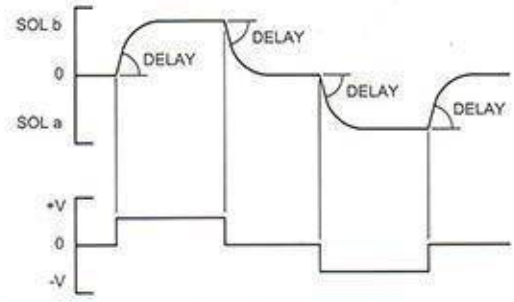

4ManPro

Elements For Manufacturing Processes

YUKEN

YUKEN HYDRAULICS (TW) CO., LTD

F

OITHER VALVES

Lift Valves

Max. Pressure 21 MPa

These valves are combined valves for multiple control and specially developed to control the hydraulic operated car parking equipment.
These valves are compact design and have a very small internal leakage.(below 0.3cm³/min)

Specifications

Model No.	Max. T-Line Back Pressure MPa (kgf/cm²)	Max. Flow L/min	Mass kg
LVST-03-※-20	16 (160)	30	4.3

Graphic Symbol

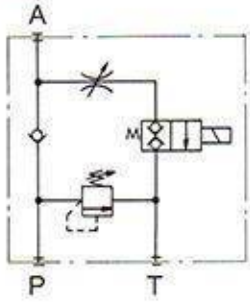

Model Number Designation

LVST-03-R220-N1-20

- Series Number
- (Threaded Connection) Valve Size
- Coil Type★ R110, R220, D24
- Electrical Conduit Connection
  - None: Terminal Box Type
  - N1: Standard Plug-In Connector Type with Indicator Light
- Design Number

★When used in AC source, please select R※ type coil.
★The coil type is the same as that of the solenoid operated directional valve DSG-03 series.

F

LVST-03-※

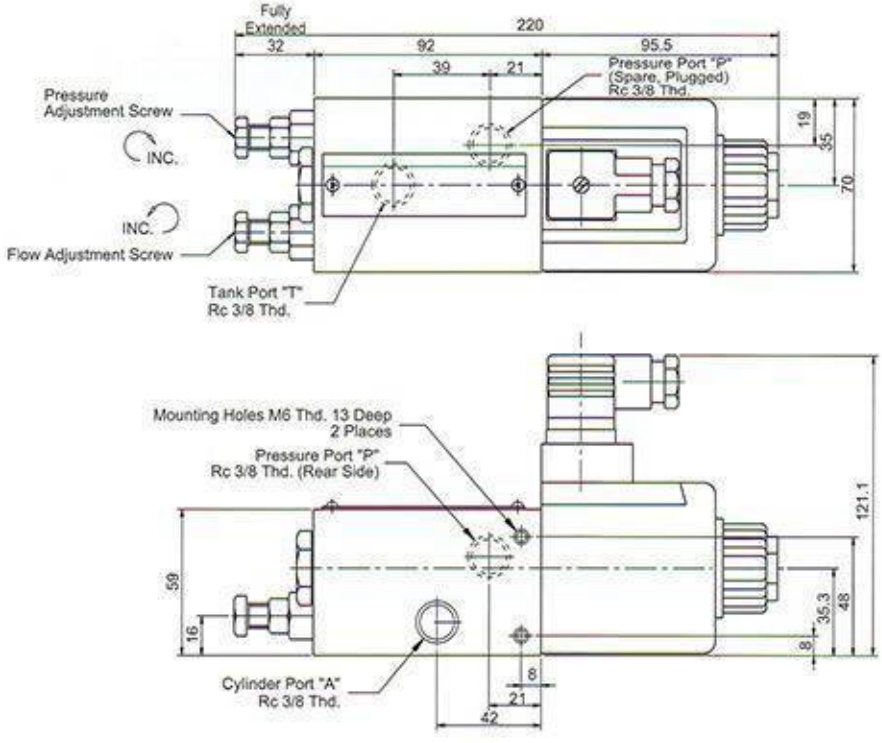

Air Bleed Valaes
Automatic Shut Off Valves

Max. Pressure 21 MPa

Air Bleed Valve

AVT-03

This valve is designed to use when a pump starts to bleed off the air which is enclosed in a suction line or another line in the system. The valve can also be used to bleed off the air in the large cylinders.

Specifications

Model No.	Closing Pressure	Cracking Pressure	Mass
AVT-03-※10	0.15 MPa	0.38 MPa	0.2kg

Model Number Designation

AVT-03-05-10

- Series Number (Threaded Connection)
- Valve Size
- Range of Usage to Pump Output Flow
  - 05:5~20l/min
  - 20: Over 20l/min
- Design Number

Graphic Symbol

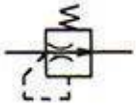

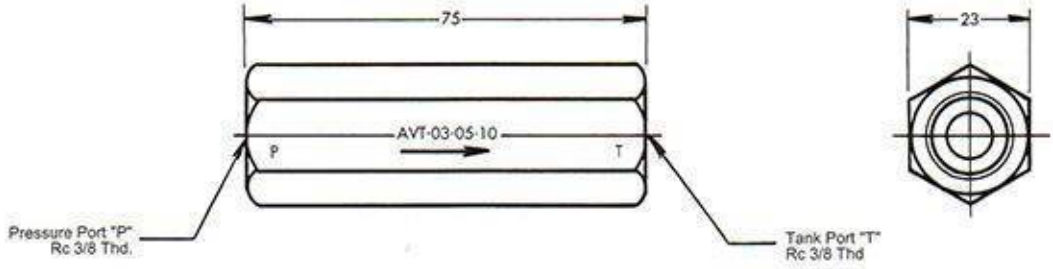

◎Tank port should be located under the oil level in the reservoir.

Automatic Shut Off Valve

DAS-03

Specifications

Model No.	Closing Flow L/min	Adapted Flow L/min	Min. Operating Pressure MPa★3	Mass kg
DAS-03-20-10	20	10~13	0.5	0.4
DAS-03-30-10	30	15~20	0.9	
DAS-03-40-10	42	21~28	0.9	

Model Number Designation

DAS-03-20-10

- Series Number (Threaded Connection)
- Valve Size
- Flow Rate of Closing
  - 20: 20 L/min
  - 30: 30 L/min
  - 40: 42 L/min
- Design Number

Graphic Symbol

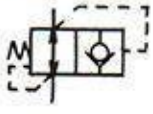

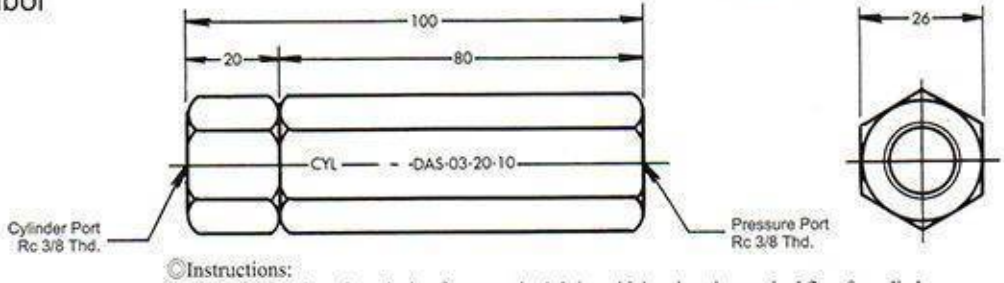

◎Instructions:

1. In selecting the valve, closing flow must be 1.5 times higher than the required flow for cylinders.
2. The Valve does not operate at a small flow rate.

★3. The figure in the table shows the minimum pressure which can keep the closing condition.

4ManPro

Elements For Manufacturing Processes

YUKEN

YUKEN HYDRAULICS (TW) CO., LTD

G

MODULAR BASE PLATES

Base Plates

Max. Pressure 31.5 MPa

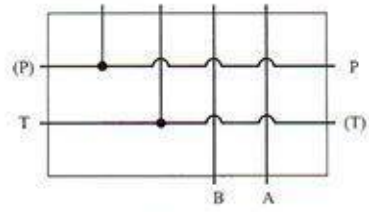

MMC-01-1

MODEL NUMBER DESIGNATION

MMC	-01	-1	-21T
Series Number	Plate Size	Number of Station	Design Number
MMC: Base Plates	01	1:1 Station	21T*

* Design Standards 21T . . .YUKEN Taiwan Standard (A port is upwards)
2190T. . .N. American Design Standard

DIMENSIONS

- **MMC-01-1-21T/2190T**

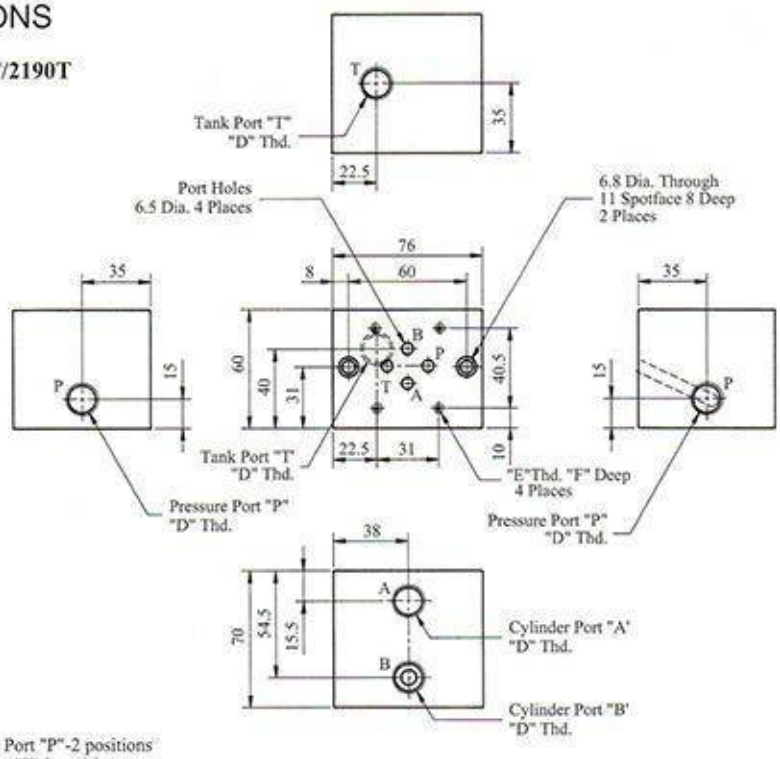

※Pressure Port "P"-2 positions
※Tank Port "T"-2 positions

Model Numbers	Piping Size "D"	"E"	Dimension mm F	Mass kg
MMC-01-1-21T	Rc 3/8	M5	10	2.25
MMC-01-1-2190T	3/8 NPT	No,10-24 UNC	12	

G

Base Plates

Max. Pressure 31.5 MPa

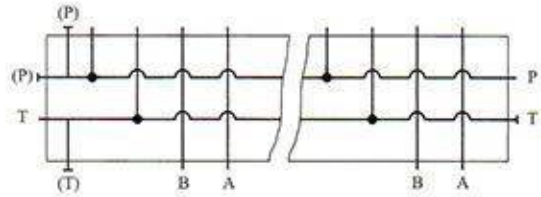

MMC-01-2 ~10

MODEL NUMBER DESIGNATION

MMC	-01	-6	-21T
Series Number	Plate Size	Number of Stations	Design Number
MMC: Base Plates	01	2:2 Stations 3:3 Stations 4:4 Stations 5:5 Stations 6:6 Stations 7:7 Stations 8:8 Stations 9:9 Stations 10:10 Stations	21T *

* Design Standards 21T . . .YUKEN Taiwan Standard (A port is upwards)
2190T . . .N. American Design Standard

DIMENSIONS

● **MMC-01-*-21T/2191T**

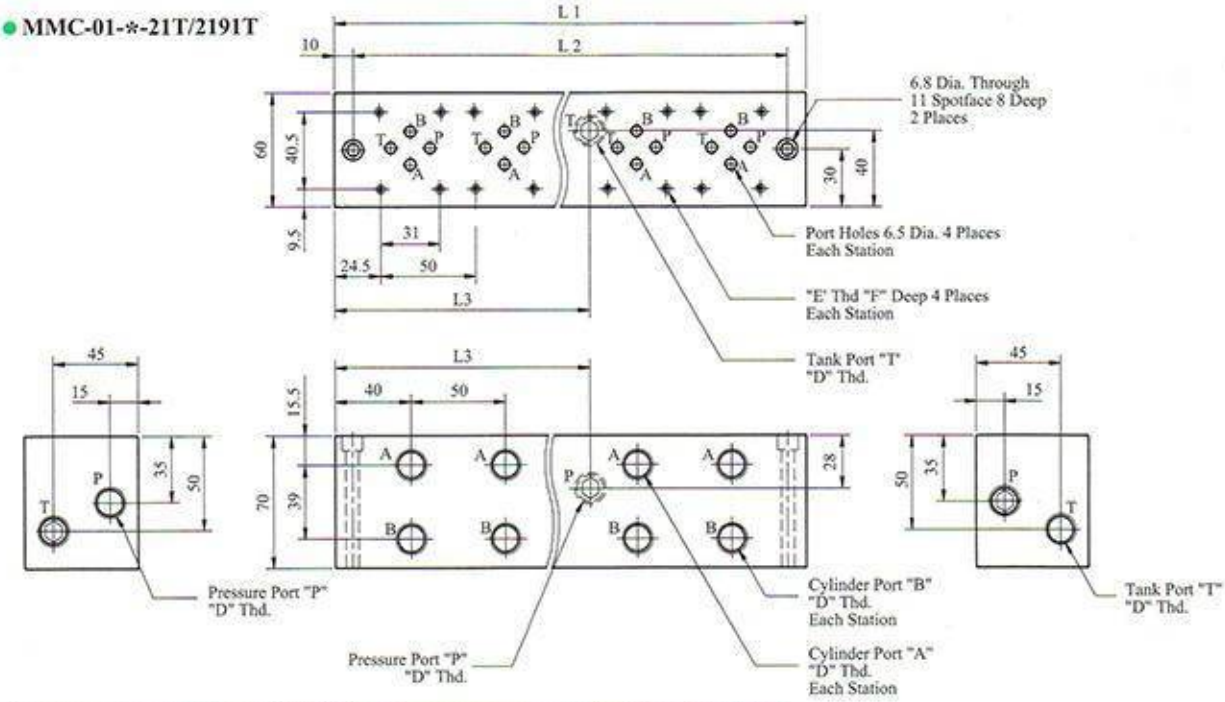

Model Numbers	Piping Size "D"	"E"	Dimension mm F
MMC-01-*-21T	Rc 3/8	M5	10
MMC-01-*-2190T	3/8 NPT	No,10-24 UNC	12

※Pressure Port "P"-3 positions
※Tank Port "T"-3 positions

Model Numbers	Dimensions mm			Mass Kg
	L1	L2	L3	
MMC-01-2	130	110	65	3.55
MMC-01-3	180	160	65	4.95
MMC-01-4	230	210	115	6.35
MMC-01-5	280	260	115	7.75
MMC-01-6	330	310	165	9.25

Model Number	Dimension mm			Mass Kg
	L1	L2	L3	
MMC-01-7	380	360	165	10.65
MMC-01-8	430	410	215	12.05
MMC-01-9	480	460	215	13.45
MMC-01-10	530	510	265	14.85

YUKEN
OIL HYDRAULIC EQUIPMENT

Base Plates

Max. Pressure 31.5 MPa

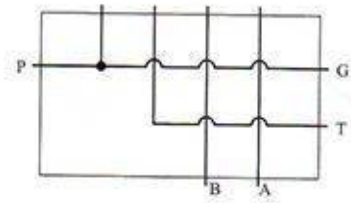

MMC-03-1

MODEL NUMBER DESIGNATION

MMC	-03	-1	-21T
Series Number	Plate Size	Number of Stations	Design Number
MMC: Base Plates	03	1:1 Station	21T*

* Design Standard : 21T . . .YUKEN Taiwan Standard (A port is upwards)
2190T . . .N. American Design Standard

DIMENSIONS

- **MMC-03-1-21T/2190T**

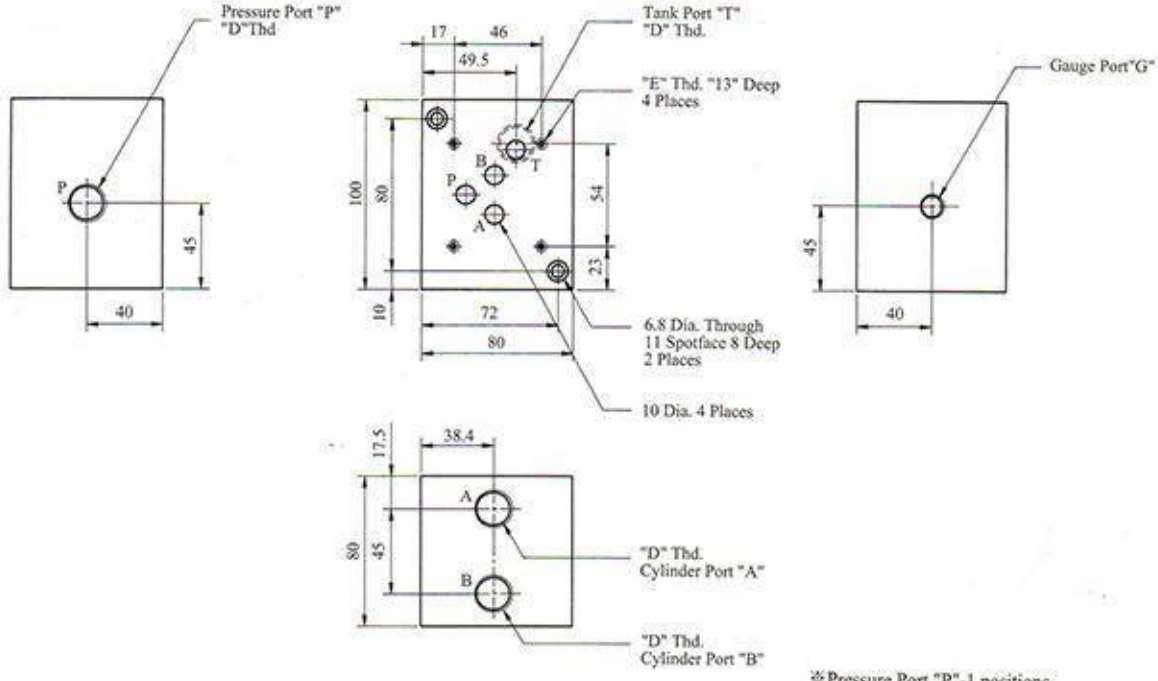

※Pressure Port "P"-1 positions
※Tank Port "T"-1 positions

Model Numbers	Piping Size "D"	"E"	Gauge Port "G"	Mass KG
MMC-03-1-21T	Rc 1/2	M6	Rc 1/4	3.3
MMC-03-1-2190T	1/2 NPT	1/4-20 UNC	1/4 NPT	

G

Base Plates

Max. Pressure 31.5 MPa

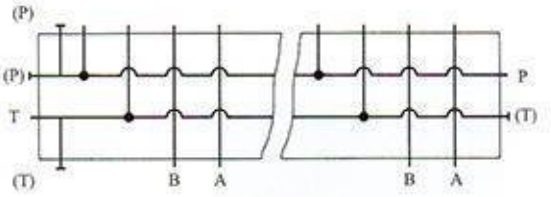

MMC-03-2~6

RATING

MMC	-03	-6	-20T
Series Number	Plate Size	Number of Station	Design Number
MMC: Base Plate	03	2:2 Stations 3:3 Stations 4:4 Stations 5:5 Stations 6:6 Stations	20T*

* Desing Standard : 20T . . .YUKEN Taiwan Standard (A port is upwards)
2090T . . .N.American Desing Standard

DIMENSIONS

- **MMC-03-*-20T/2090T**

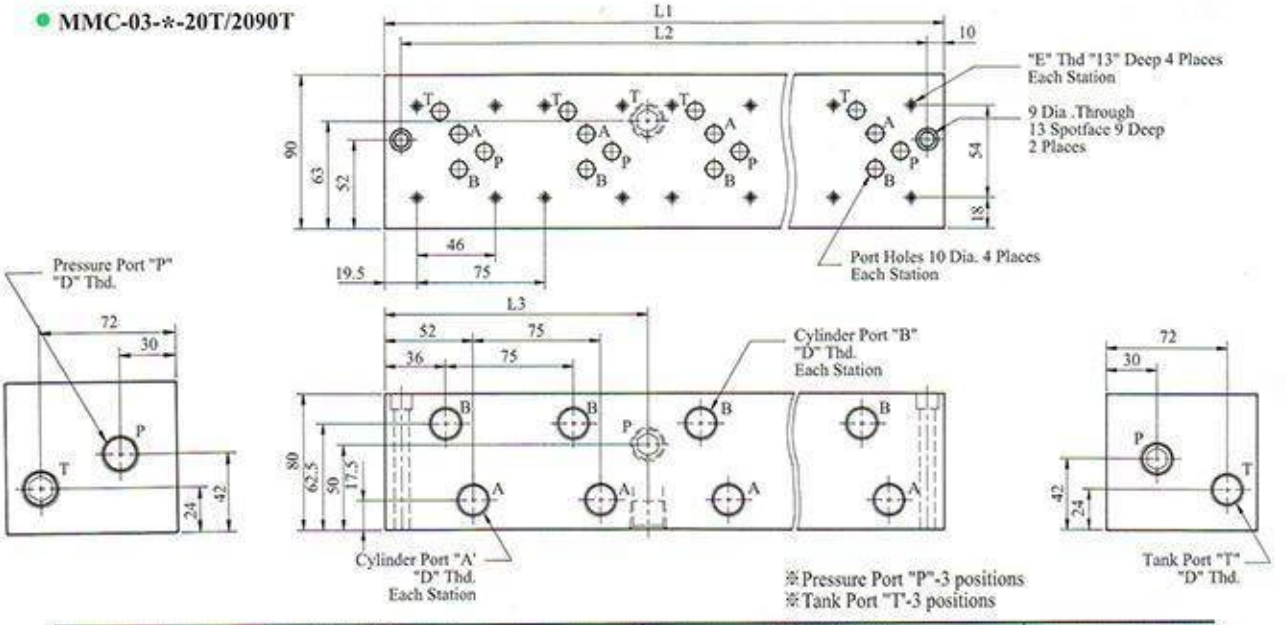

Model Numbers	Piping Size "D"	"E"	Dimension mm L1	L2	L3	Mass Kg
MMC-03-2-20T	Rc 1/2	M6	160	140	80	7.7
MMC-03-2-2090T	1/2 NPT	1/4-20 UNC				
MMC-03-3-20T	Rc 1/2	M6	235	215	80	11.4
MMC-03-3-2090T	1/2 NPT	1/4-20 UNC				
MMC-03-4-20T	Rc 1/2	M6	310	290	155	15.15
MMC-03-4-2090T	1/2 NPT	1/4-20 UNC				
MMC-03-5-20T	Rc 1/2	M6	385	365	155	19.05
MMC-03-5-2090T	1/2 NPT	1/4-20 UNC				
MMC-03-6-20T	Rc 1/2	M6	460	440	230	22.65
MMC-03-6-2090T	1/2 NPT	1/4-20 UNC				
MMC-03-7-20T	Rc 1/2	M6	535	515	230	26.4
MMC-03-7-2090T	1/2 NPT	1/4-20 UNC				

YUKEN HYDRAULICS (T.W.)., CO., LTD.

MEXICO BRANCH OFFICE
Roberto Diaz No. 401
Ciudad Industrial
Aguascalientes, Ags.
México
20290

4ManPro@4ManPro.com
+52 (449) 171 3420
www.4ManPro.com/SPA/

USA BRANCH OFFICE
708 Main St.
10Th Floor
Houston, Tx, USA
77002

4ManPro_USA@4ManPro.com
+1 (832) 871 5022
www.4ManPro.com/ENG/

Elements For Manufacturing Processes