4ManPro

Elements For Manufacturing Processes

AUTOGRIP MACHINERY

佳賀精機股份有限公司

AUTOGRIP MACHINERY CO., LTD.

CH-H

FULL CATALOG

4ManPro

Elements For Manufacturing Processes

AUTOGRIP®

AUTOGRIP MACHINERY

CP SERIES

SYNCHRONIC HYDRAULIC CLAMPS

CP20

SYNCHRONOUS HYDRAULIC CLAMPS

佳賀精機股份有限公司
AUTOGRIP MACHINERY CO., LTD.

佳賀精機股份有限公司
AUTOGRIP MACHINERY CO., LTD.

Characteristics

MODEL		CP-20
Effective Piston Area (cm²)	Extended	*28.27*
	Retracted	*25.13*
Jaw Stroke Diameter		*20.00*
Gripping Capacity		*150.00*
Maximum Gripping Force [kN(Kgf)]		*14.40 (1465.00)*
Maximum Pressure [Mpa (Kgf/cm²)]		*3.50 (35.00)*
Weight (kg)		*9.50*

** All dimensions are given in millimeters.*

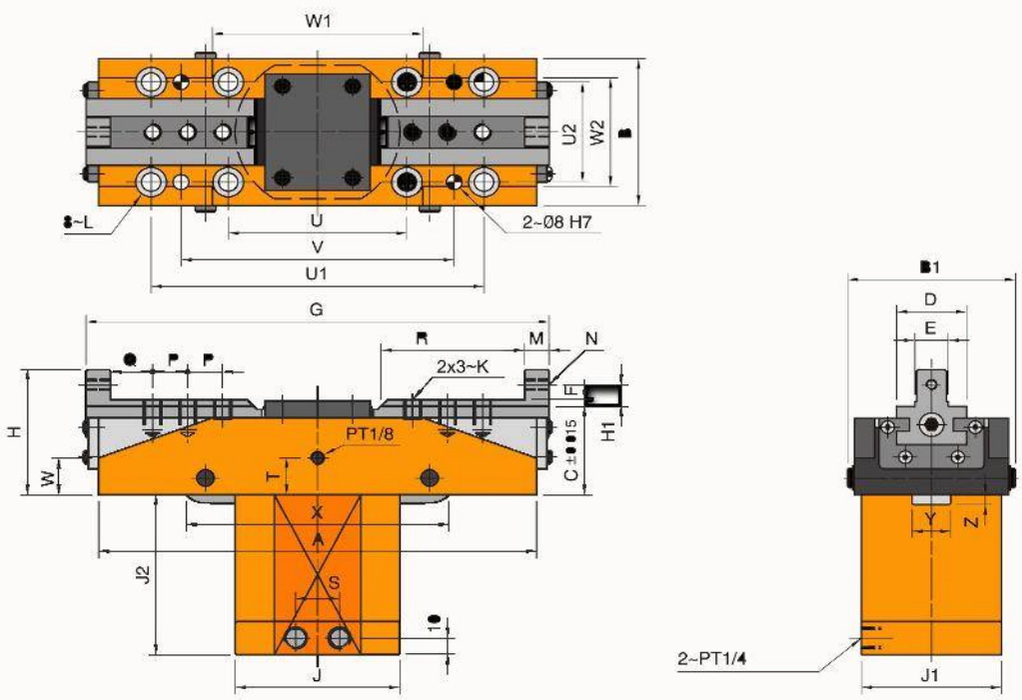

佳賀精機股份有限公司
AUTOGRIP MACHINERY CO., LTD.

Dimensions

MODEL	CP-30
A	280.00
B	88.00
B1	96.00
C	53.00
D	40.00
$E_{(H6)}$	22.00
F	4.00
G_{MAX}	327.00
G_{MIN}	297.00
H	75.00
H1	13.00
J	94.00
J1	76.00
J2	96.00
K	M12 x 1.75
L	M10
M	14.00
N	M6 x 1
P	20.00
Q	24.00
R	98.00
S	24.00
T	22.00
U	102.00
U1	190.00
U2	60.00
V	156.00
W	23.00
W1	110.00
W2	65.00
X	156.00
Y	22.00
Z	6.00

*** This elemets can be order by special order
**** All dimensions are given in millimeters.

CP30

SYNCHRONOUS HYDRAULIC CLAMPS

佳賀精機股份有限公司
AUTOGRIP MACHINERY CO., LTD.

佳賀精機股份有限公司
AUTOGRIP MACHINERY CO., LTD.

Characteristics

MODEL		CP-30
Effective Piston Area (cm²)	Extended	*28.27*
	Retracted	*25.13*
Jaw Stroke Diameter		*30.00*
Gripping Capacity		*210.00*
Maximum Gripping Force [kN(Kgf)]		*14.40 (1,465.00)*
Maximum Pressure [Mpa (Kgf/cm²)]		*3.50 (35.00)*
Weight (kg)		*12.00*

**** All dimensions are given in millimeters.*

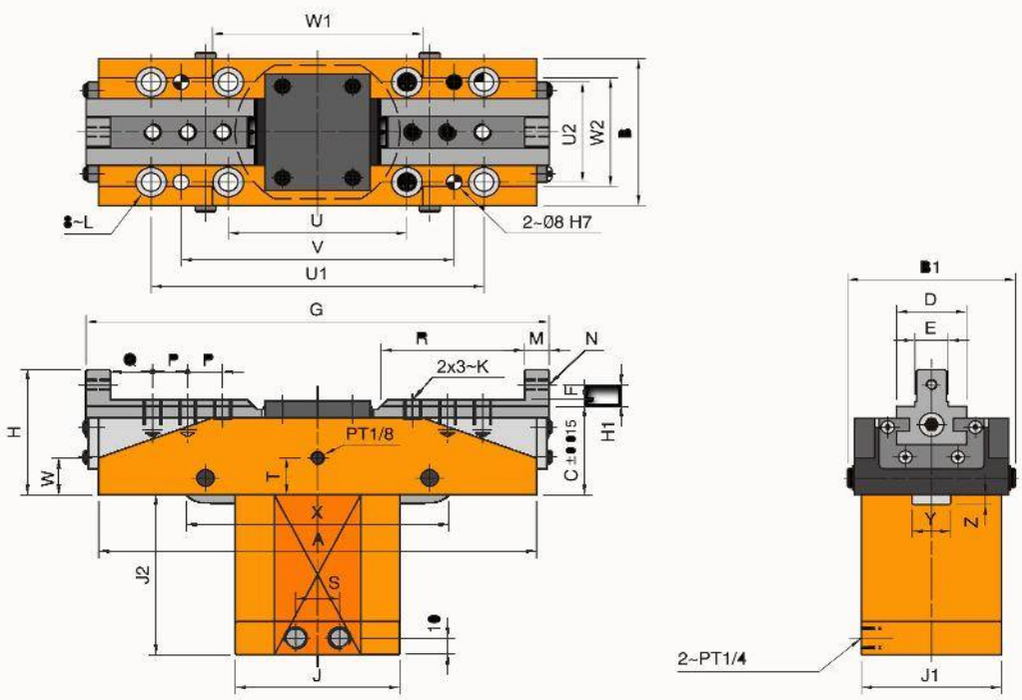

佳賀精機股份有限公司
AUTOGRIP MACHINERY CO., LTD.

Dimensions

MODEL	CP-20
A	215.00
B	88.00
B1	96.00
C	53.00
D	40.00
$E_{(H6)}$	18.00
F	4.00
G_{MAX}	249.00
G_{MIN}	229.00
H	75.00
H1	13.00
J	94.00
J1	76.00
J2	83.50
K	M10 x 1.50
L	M10
M	12.00
N	M6 x 1
P	18.00
Q	20.00
R	66.00
S	24.00
T	22.00
U	102.00
U1	190.00
U2	60.00
V	156.00
W	32.00
W1	110.00
W2	65.00
X	150.00
Y	22.00
Z	4.00

**** This elemets can be order by special order*
***** All dimensions are given in millimeters.*

CP30A

SYNCHRONOUS HYDRAULIC CLAMPS

佳賀精機股份有限公司
AUTOGRIP MACHINERY CO., LTD.

佳賀精機股份有限公司
AUTOGRIP MACHINERY CO., LTD.

Characteristics

MODEL		CP-30A
Effective Piston Area (cm^2)	Extended	*38.48*
	Retracted	*33.57*
Jaw Stroke Diameter		*50.00*
Gripping Capacity		*215.00*
Maximum Gripping Force [kN(Kgf)]		*17.70 (1,812.00)*
Maximum Pressure [Mpa (Kgf/cm^2)]		*3.50 (35.00)*
Weight (kg)		*18.50*

**** All dimensions are given in millimeters.*

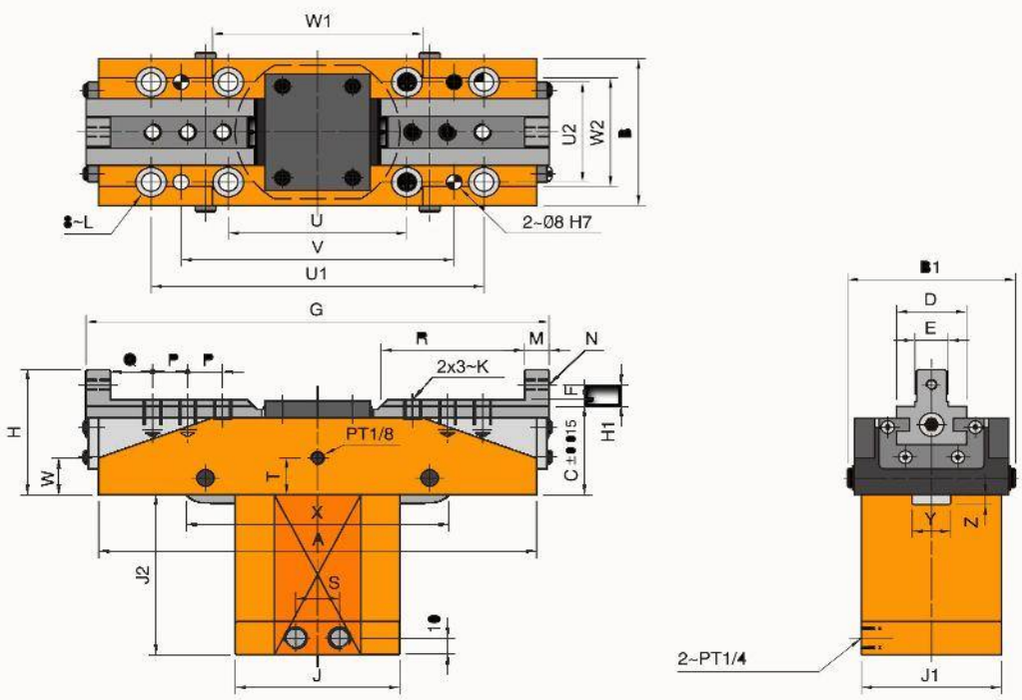

佳賀精機股份有限公司
AUTOGRIP MACHINERY CO., LTD.

Dimensions

MODEL	CP-30A
A	250.00
B	88.00
B1	96.00
C	53.00
D	40.00
$E_{(H6)}$	18.00
F	4.00
G_{MAX}	295.00
G_{MIN}	265.00
H	75.00
H1	13.00
J	94.00
J1	76.00
J2	96.00
K	M10 x 1.50
L	M10
M	14.00
N	M6 x 1
P	20.00
Q	24.00
R	96.00
S	24.00
T	22.00
U	102.00
U1	190.00
U2	60.00
V	156.00
W	20.00
W1	120.00
W2	65.00
X	156.00
Y	22.00
Z	6.00

*** This elemets can be order by special order
**** All dimensions are given in millimeters.

CP40

SYNCHRONOUS HYDRAULIC CLAMPS

佳賀精機股份有限公司
AUTOGRIP MACHINERY CO., LTD.

佳賀精機股份有限公司
AUTOGRIP MACHINERY CO., LTD.

Characteristics

MODEL		CP-40
Effective Piston Area (cm^2)	Extended	***28.27***
	Retracted	***25.13***
Jaw Stroke Diameter		***40.00***
Gripping Capacity		***200.00***
Maximum Gripping Force [kN(Kgf)]		***14.40 (1,465.00)***
Maximum Pressure [Mpa (Kgf/cm^2)]		***3.50 (35.00)***
Weight (kg)		***12.00***

** This elemets can be order by special order*
**** All dimensions are given in millimeters.*

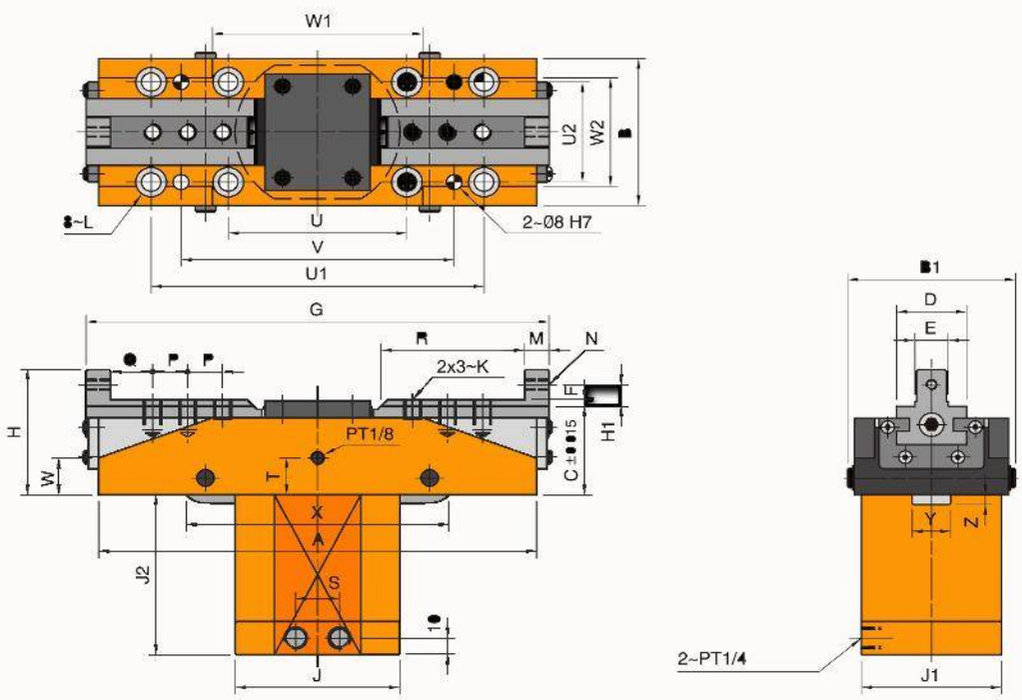

佳賀精機股份有限公司
AUTOGRIP MACHINERY CO., LTD.

Dimensions

Model	CP-40
A	270.00
B	88.00
B1	96.00
C	53.00
D	40.00
$E_{(H6)}$	22.00
F	4.00
G_{MAX}	331.00
G_{MIN}	291.00
H	75.00
H1	13.00
J	94.00
J1	76.00
J2	110.00
K	M12 x 1.75
L	M10
M	14.00
N	M6 x 1
P	20.00
Q	24.00
R	98.00
S	24.00
T	22.00
U	102.00
U1	190.00
U2	60.00
V	156.00
W	25.00
W1	110.00
W2	65.00
X	150.00
Y	22.00
Z	10.50

**** This elemets can be order by special order*
***** All dimensions are given in millimeters.*

CP50

SYNCHRONOUS HYDRAULIC CLAMPS

佳賀精機股份有限公司
AUTOGRIP MACHINERY CO., LTD.

佳賀精機股份有限公司
AUTOGRIP MACHINERY CO., LTD.

Characteristics

MODEL		CP-50
Effective Piston Area (cm^2)	Extended	***38.48***
	Retracted	***33.57***
Jaw Stroke Diameter		***50.00***
Gripping Capacity		***215.00***
Maximum Gripping Force [kN(Kgf)]		***20.30 (2070.00)***
Maximum Pressure [Mpa (Kgf/cm^2)]		***3.50 (35.00)***
Weight (kg)		***18.50***

*** All dimensions are given in millimeters.*

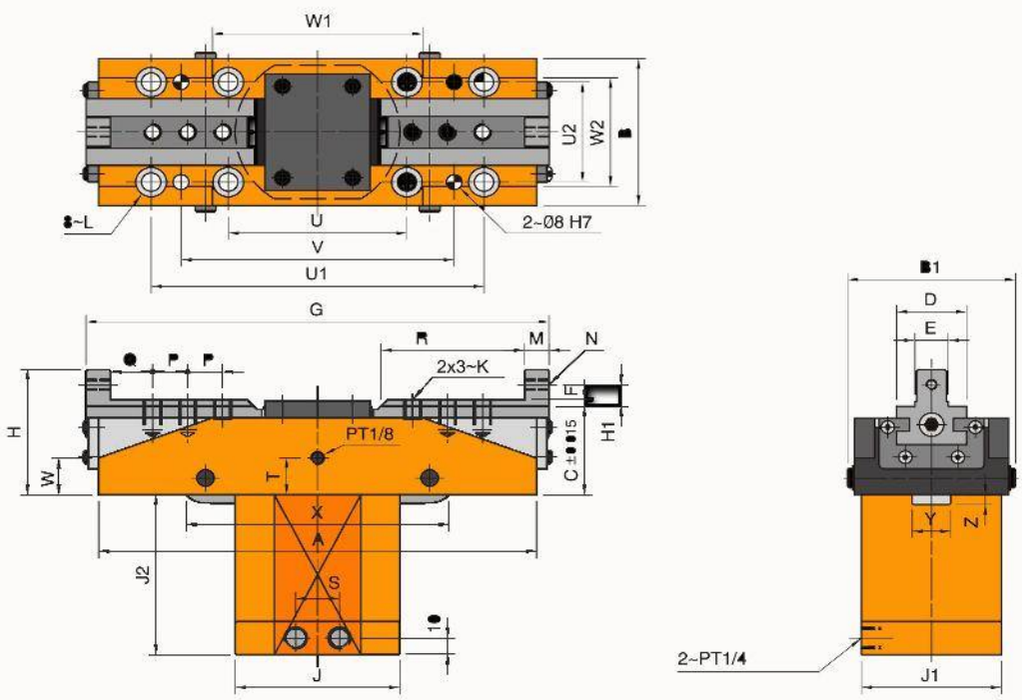

佳賀精機股份有限公司
AUTOGRIP MACHINERY CO., LTD.

Dimensions

MODEL	CP-50
A	300.00
B	110.00
B1	115.00
C	65.00
D	50.00
$E_{(H6)}$	28.00
F	5.00
G_{MAX}	369.00
G_{MIN}	319.00
H	90.00
H1	15.00
J	105.00
J1	105.00
J2	120.00
K	M12 x 1.75
L	M10
M	16.00
N	M8 x 1.25
P	21.00
Q	28.00
R	102.00
S	30.00
T	32.00
U	105.00
U1	230.00
U2	85.00
V	195.00
W	29.00
W1	140.00
W2	80.00
X	180.00
Y	30.00
Z	10.00

**** This elemets can be order by special order*
***** All dimensions are given in millimeters.*

CP70

SYNCHRONOUS HYDRAULIC CLAMPS

佳賀精機股份有限公司
AUTOGRIP MACHINERY CO., LTD.

佳賀精機股份有限公司
AUTOGRIP MACHINERY CO., LTD.

Characteristics

MODEL		CP-70
Effective Piston Area (cm²)	Extended	*50.26*
	Retracted	*45.35*
Jaw Stroke Diameter		*70.00*
Gripping Capacity		*235.00*
Maximum Gripping Force [kN(Kgf)]		*23.90 (2,434.00)*
Maximum Pressure [Mpa (Kgf/cm²)]		*3.50 (35.00)*
Weight (kg)		*30.00*

** This elemets can be order by special order*
*** All dimensions are given in millimeters.*

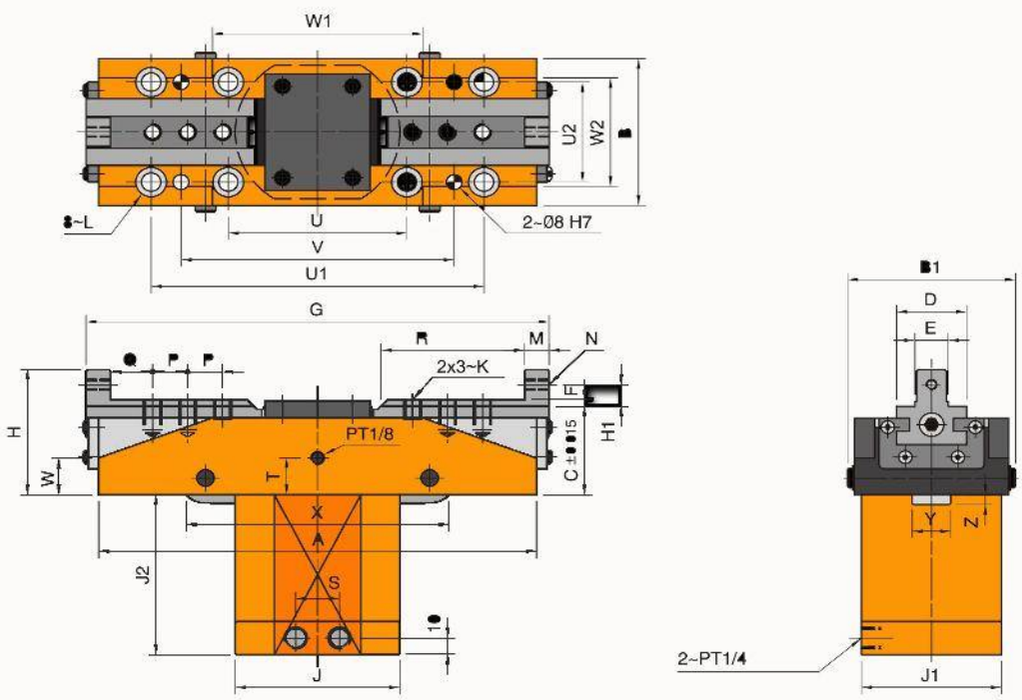

佳賀精機股份有限公司
AUTOGRIP MACHINERY CO., LTD.

Dimensions

MODEL	CP-70
A	346.00
B	120.00
B1	126.00
C	89.00
D	55.00
$E_{(H6)}$	32.00
F	5.00
G_{MAX}	430.00
G_{MIN}	360.00
H	114.00
H1	15.00
J	115.00
J1	115.00
J2	146.00
K	M14 x 2.00
L	M12
M	16.00
N	M8 x 1.25
P	23.00
Q	28.00
R	112.00
S	30.00
T	52.00
U	120.00
U1	275.00
U2	95.00
V	240.00
W	42.00
W1	155.00
W2	90.00
X	210.00
Y	34.00
Z	23.50

**** This elemets can be order by special order*
***** All dimensions are given in millimeters.*

4ManPro

Elements For Manufacturing Processes

AUTOGRIP®

AUTOGRIP MACHINERY

FA SERIES

SINGLE SIDE SLIDE HEADS

佳賀精機股份有限公司
AUTOGRIP MACHINERY CO., LTD.

FA-408
SINGLE LATERAL SLIDE HEAD

Coined plunger with the ability to work in combination with a ***Hydraulic Transmission*** or a ***Servo Transmission***

佳賀精機股份有限公司
AUTOGRIP MACHINERY CO., LTD.

PLUNGER WITH THE CAPACITY TO WORK IN COMBINATION WITH A HYDRAULIC TRANSMISSION OR A SERVO TRANSMISSION

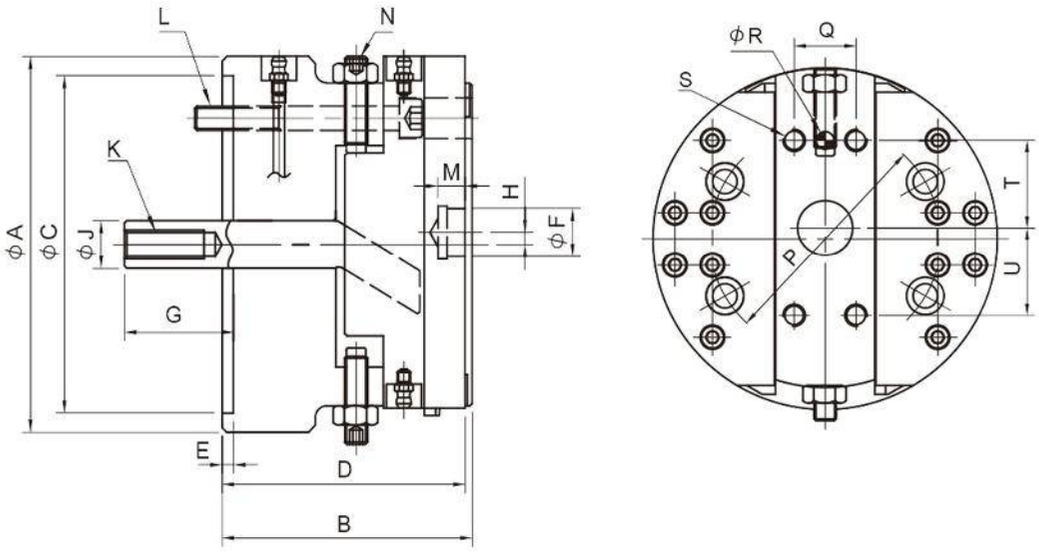

佳賀精機股份有限公司
AUTOGRIP MACHINERY CO., LTD.

Características & Dimensiones

Modelo	FA-610*
Carrera Del Embolo *(mm.)*	*18.00*
Carrera De La Corredera *(mm.)*	*10.00*
Velocidad Máxima min^{-1} *(r.p.m.)*	*1200.00*
Velocidad Máxima De Alimentación *(mm/min)*	*280.00*
Peso *(Kg.)*	*0.04*
Cilindro Equivalente	*14.50*
Presión Máxima *Mpa(Kgf/cm²)*	*RS-6520N*
A	*156.00*
B	*110.00*
$C_{(H7)}$	*140.00*
D	*107.00*
E	*5.00*
$F_{(H7)}$	*20.00*
$M_{áx.}$	*66.00*
G_{min}	*48.00*
H	*±5.00*
J	*20.00*
K	*M12 x 1.75*
L	*4 ~ M10 x 90*
M	*12.00*
N	*2 ~ M10 x 45*
P	*104.80*
Q	*28.00*
R(H7)	*10.00*
S	*4 ~ M10 x 16*
T	*40.00*
U	*40.00*

*** Modelo de fabricación sobre pedido especial.*
**** Todas las dimensiones están dadas en milímetros.*

佳賀精機股份有限公司
AUTOGRIP MACHINERY CO., LTD.

FA-610*
SINGLE LATERAL SLIDE HEAD

Coined plunger with the ability to work in combination with a ***Hydraulic Transmission*** or a ***Servo Transmission***

佳賀精機股份有限公司
AUTOGRIP MACHINERY CO., LTD.

PLUNGER WITH THE CAPACITY TO WORK IN COMBINATION WITH A HYDRAULIC TRANSMISSION OR A SERVO TRANSMISSION

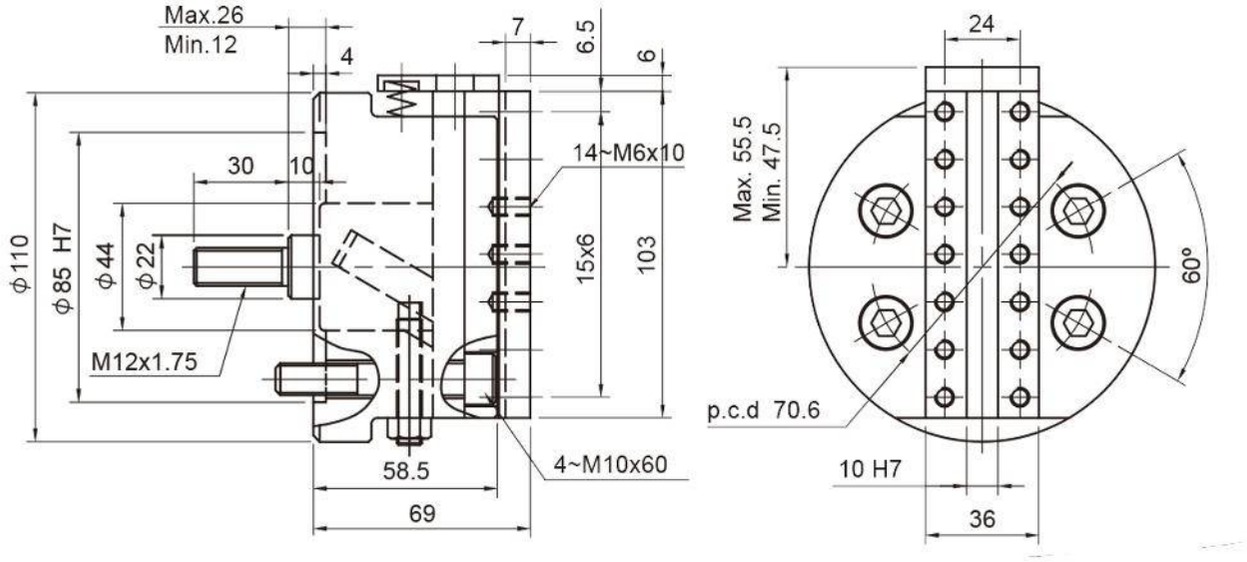

佳賀精機股份有限公司
AUTOGRIP MACHINERY CO., LTD.

Characteristics & Dimensions

MODEL	FA-408
Plunger Stroke	*30*
Slide Stroke	*30*
Maximum Speed ***(r.p.m.)***	*800*
Feeding Maximum Speed ***(mm/min)***	*240*
Total Weight ***(Kg)***	*23.90*
Equivalent Cylinder	*RS-6530N*
Maximum Pressure ***Mpa (Kgf/cm^2)***	*1.80 (18.00)*
A	-
B	-
$C_{(H7)}$	-
D	-
E	-
$F_{(H7)}$	-
$G_{máx}$	-
G_{min}	-
H	-
J	-
K	-
L	-
M	-
N	-
P	-
Q	-
R	-
S	-
T	-
U	-
V	-
W	-

**** All dimensions are given in millimeters.*

佳賀精機股份有限公司
AUTOGRIP MACHINERY CO., LTD.

FA-615
SINGLE LATERAL SLIDE HEAD

Crown** and **Pinion with the ability to work in combination with a ***Hydraulic Transmission***

佳賀精機股份有限公司
AUTOGRIP MACHINERY CO., LTD.

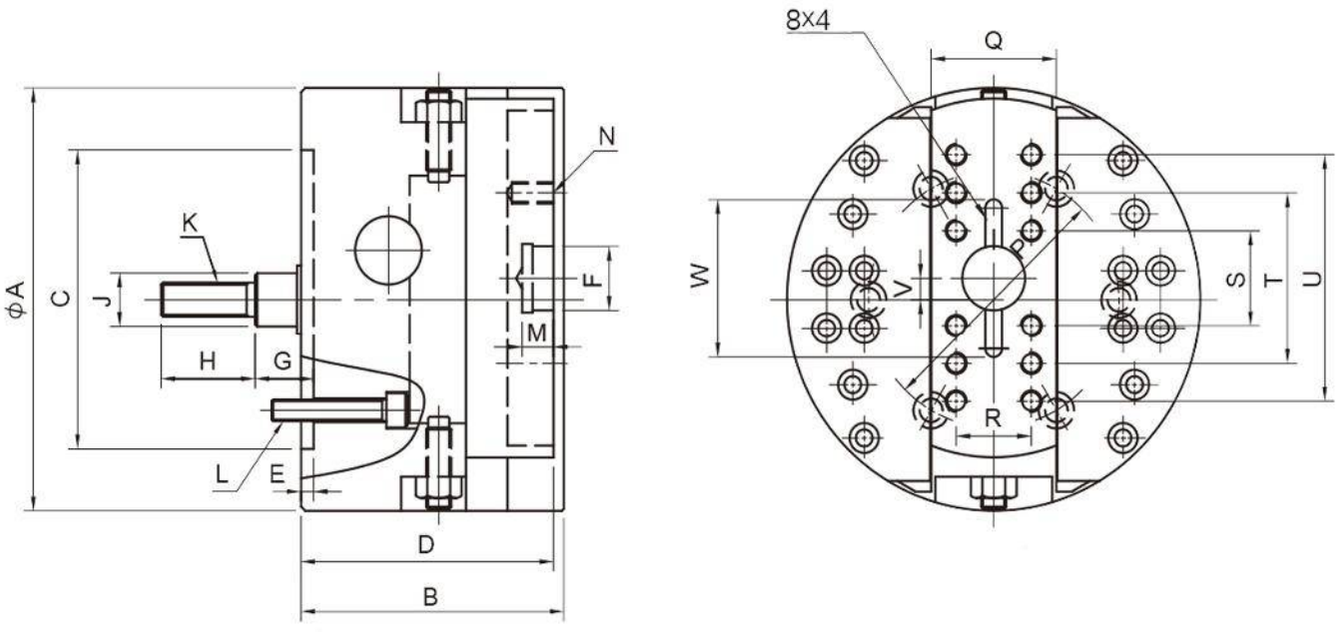

佳賀精機股份有限公司
AUTOGRIP MACHINERY CO., LTD.

Characteristics & Dimensions

Model	FA-615
Plunger Stroke	*15*
Slide Stroke	*15*
Maximum Speed ***(r.p.m.)***	*1,200*
Feeding Maximum Speed ***(mm/min)***	*300*
Total Weight ***(Kg)***	*11.90*
Equivalent Cylinder	*RS-6520N*
Maximum Pressure ***Mpa (Kgf/cm^2)***	*1.2(12)*
A	*150*
B	*107*
$C_{(H7)}$	*110*
D	*102*
E	*5*
$F_{(H7)}$	*25.00*
$G_{máx}$	*40*
G_{min}	*25*
H	*35*
J	*20*
K	*M12 x 1.75*
L	*3 ~ M10 x 40*
M	*12*
N	*8 ~ M8 x 16*
P	*82.6*
Q	*50*
R	*32*
S	*32*
T	*68*
U	*-*
V	*±7.5*
W	*56*

**** All dimensions are given in millimeters.*

佳賀精機股份有限公司
AUTOGRIP MACHINERY CO., LTD.

FA-812*
SINGLE LATERAL SLIDE HEAD

Coined plunger with the ability to work in combination with a ***Hydraulic Transmission*** or a ***Servo Transmission***

佳賀精機股份有限公司
AUTOGRIP MACHINERY CO., LTD.

PLUNGER WITH THE CAPACITY TO WORK IN COMBINATION WITH A HYDRAULIC TRANSMISSION OR A SERVO TRANSMISSION

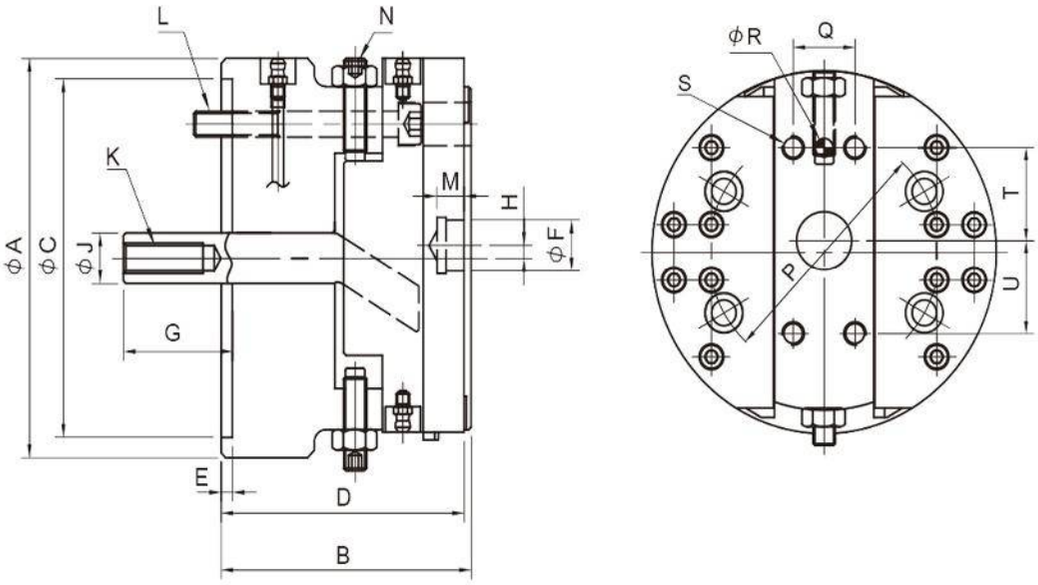

佳賀精機股份有限公司
AUTOGRIP MACHINERY CO., LTD.

Characteristics & Dimensions

Model	FA-812*
Plunger Stroke	*21*
Slide Stroke	*12*
Maximum Speed ***(r.p.m.)***	*800*
Feeding Maximum Speed ***(mm/min)***	*450*
Total Weight ***(Kg)***	*0.14*
Equivalent Cylinder	*14.5*
Maximum Pressure ***Mpa (Kgf/cm^2)***	*RS-6520N*
A	*198*
B	*130*
$C_{(H7)}$	*170*
D	*127*
E	*5*
$F_{(H7)}$	*25.00*
$G_{máx}$	*84*
G_{min}	*63*
H	*±6*
J	*25*
K	*M16 x 2*
L	*4 ~ M12 x 105*
M	*12*
N	*2 ~ M12 x 60*
P	*133.4*
Q	*32*
R(H7)	*10*
S	*A ~ M10 x 16*
T	*50*
U	*50*

**** All dimensions are given in millimeters.*

佳賀精機股份有限公司
AUTOGRIP MACHINERY CO., LTD.

FA-830
SINGLE LATERAL SLIDE HEAD

Crown** and **Pinion with the ability to work in combination with a ***Hydraulic Transmission***

佳賀精機股份有限公司
AUTOGRIP MACHINERY CO., LTD.

CROWN AND PINION WITH THE CAPACITY TO WORK IN COMBINATION WITH A HYDRAULIC TRANSMISSION.

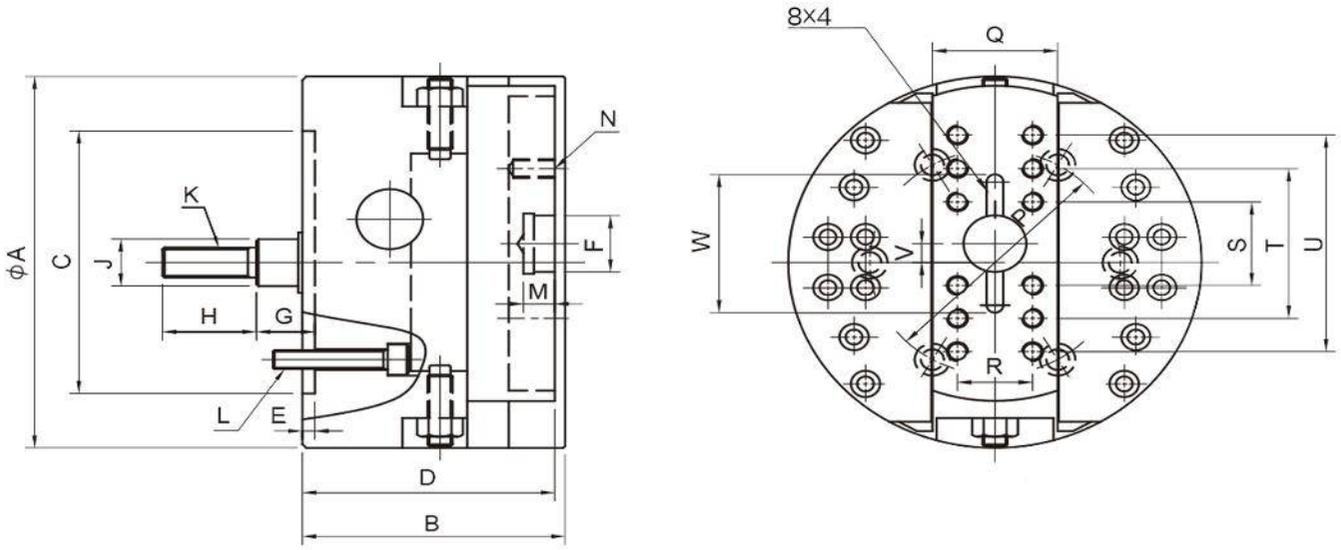

佳賀精機股份有限公司
AUTOGRIP MACHINERY CO., LTD.

Characteristics & Dimensions

Model	FA-830
Plunger Stroke	*30*
Slide Stroke	*30*
Maximum Speed ***(r.p.m.)***	*800*
Feeding Maximum Speed ***(mm/min)***	*240*
Total Weight ***(Kg)***	*23.90*
Equivalent Cylinder	*RS-6530N*
Maximum Pressure ***Mpa (Kgf/cm^2)***	*1.8(18)*
A	*198*
B	*126*
$C_{(H7)}$	*140*
D	*121*
E	*6*
$F_{(H7)}$	*30.00*
$G_{máx}$	*52*
G_{min}	*22*
H	*45*
J	*25*
K	*M16 x 2*
L	*6 ~ M10 x 55*
M	*15*
N	*12 ~ M10 x 20*
P	*120*
Q	*60*
R	*36*
S	*40*
T	*80*
U	*120*
V	*±15*
W	*66*

**** All dimensions are given in millimeters.*

佳賀精機股份有限公司
AUTOGRIP MACHINERY CO., LTD.

FA-1570
SINGLE LATERAL SLIDE HEAD

Crown** and **Pinion with the ability to work in combination with a ***Hydraulic Transmission***

佳賀精機股份有限公司
AUTOGRIP MACHINERY CO., LTD.

CROWN AND PINION WITH THE CAPACITY TO WORK IN COMBINATION WITH A HYDRAULIC TRANSMISSION.

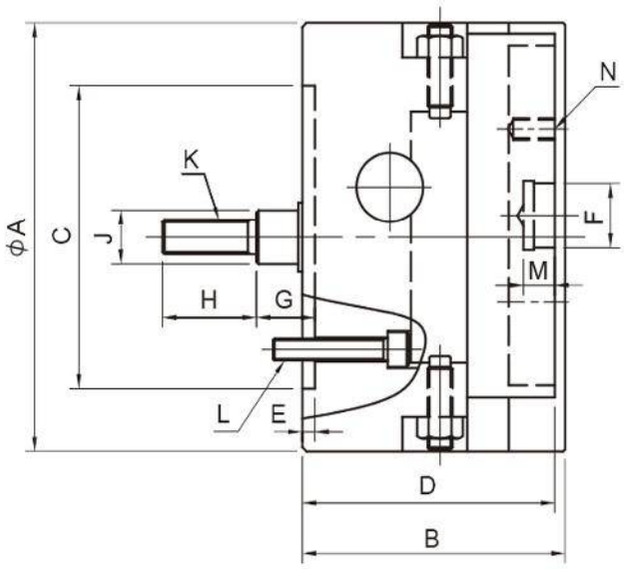

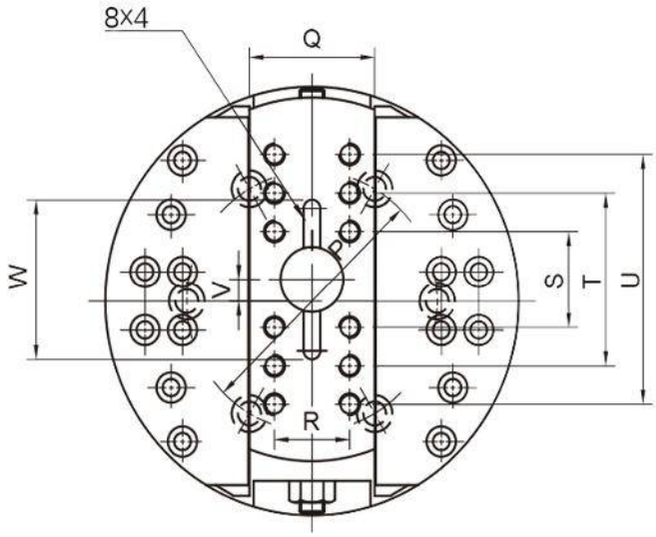

佳賀精機股份有限公司
AUTOGRIP MACHINERY CO., LTD.

Characteristics & Dimensions

Model	FA-1570*
Plunger Stroke	*70*
Slide Stroke	*70*
Maximum Speed ***(r.p.m.)***	*500*
Feeding Maximum Speed ***(mm/min)***	*120*
Total Weight ***(Kg)***	*167.00*
Equivalent Cylinder	*RS-1080N*
Maximum Pressure ***Mpa (Kgf/cm^2)***	*2.6(26)*
A	*400*
B	*200*
$C_{(H7)}$	*300*
D	*192*
E	*6*
$F_{(H7)}$	*60.00*
$G_{máx}$	*110*
G_{min}	*40*
H	*75*
J	*50*
K	*M30 x 3.5*
L	*6 ~ M20 x 90*
M	*15*
N	*8 ~ M16 x 20*
P	*235*
Q	*120*
R	*80*
S	*130*
T	*260*
U	*-*
V	*±17.5*
W	*-*

**** All dimensions are given in millimeters.*

4ManPro

Elements For Manufacturing Processes

AUTOGRIP®

AUTOGRIP MACHINERY

FD SERIES

DOUBLE SIDE SLIDE HEADS

佳賀精機股份有限公司
AUTOGRIP MACHINERY CO., LTD.

FD-632
DOUBLE SLIDE FACING HEAD

佳賀精機股份有限公司
AUTOGRIP MACHINERY CO., LTD.

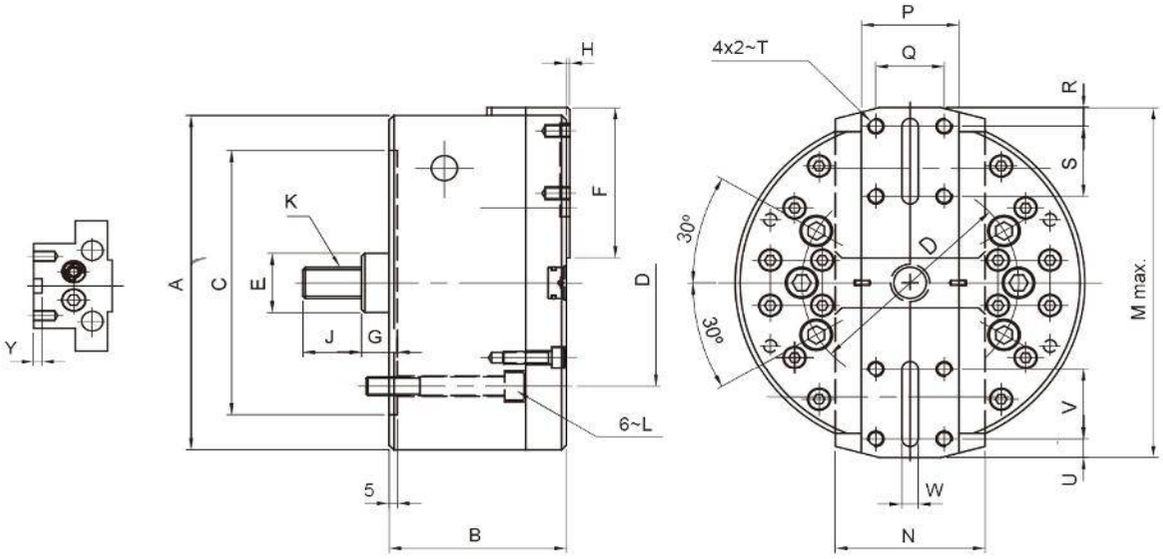

* LEVER TYPE, TO WORK IN CONJUNCTION WITH HYDRAULIC TRANSMISSIONS

佳賀精機股份有限公司
AUTOGRIP MACHINERY CO., LTD.

Characteristics & Dimensions

Model	FD-632
Plunger Stroke	*20.00*
Slide Stroke	*32.00*
Maximum Speed ***(r.p.m.)***	*3200.00*
Feeding Maximum Speed ***(mm/min)***	*300.00*
Total Weight ***(Kg)***	*13.60*
Equivalent Cylinder	*RS-1030N*
Maximum Pressure ***Mpa (Kgf/cm^2)***	*2.4(24)*
A	*168.00*
B	*93.00*
$C_{(H7)}$	*140.00*
D	*104.80*
E	*32.00*
F	*76.00*
$G_{máx}$	*31.00*
G_{min}	*11.00*
H	*2.00*
J	*36.00*
K	*M16 x 2.0*
L	*6 ~ M10 x 75*
M	*188.00*
N	*70.00*
P	*40.00*
Q	*25.00*
R	*10.00*
S	*32.00*
T	*M8 x 15*
U	*10.00*
V	*32.00*
W(H8)	*6.00*
Y	*4.00*

**** All dimensions are given in millimeters.*

佳賀精機股份有限公司
AUTOGRIP MACHINERY CO., LTD.

FD-840
DOUBLE SLIDE FACING HEAD

COINED PLUNGER CAPABLE OF WORKING IN CONJUNCTION WITH SERVO MOTOR.

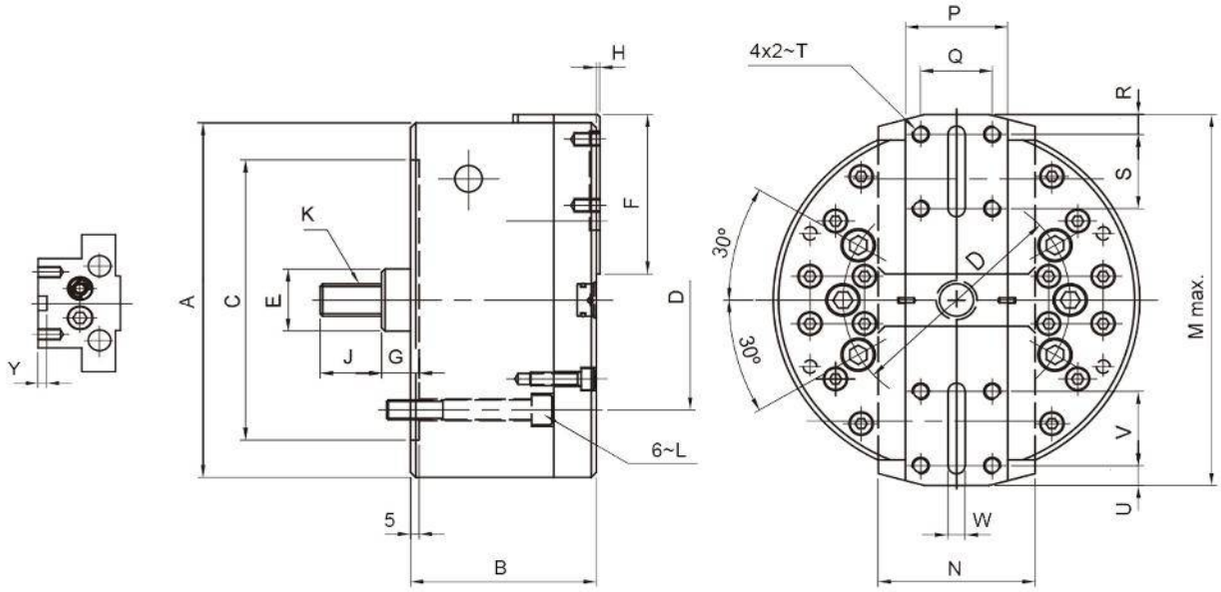

* LEVER TYPE, TO WORK IN CONJUNCTION WITH HYDRAULIC TRANSMISSIONS

佳賀精機股份有限公司
AUTOGRIP MACHINERY CO., LTD.

Characteristics & Dimensions

Model	FD-840
Plunger Stroke	*25.00*
Slide Stroke	*40.00*
Maximum Speed ***(r.p.m.)***	*2500.00*
Feeding Maximum Speed ***(mm/min)***	*240.00*
Total Weight ***(Kg)***	*30.00*
Equivalent Cylinder	*RS-1030N*
Maximum Pressure ***Mpa (Kgf/cm^2)***	*3.0(30)*
A	*215.00*
B	*109.00*
$C_{(H7)}$	*170.00*
D	*133.40*
E	*38.00*
F	*96.50*
$G_{máx}$	*32.50*
G_{min}	*7.50*
H	*2.00*
J	*36.00*
K	*M20 x 2.5*
L	*6 ~ M12 x 85*
M	*238.00*
N	*90.00*
P	*60.00*
Q	*42.00*
R	*12.00*
S	*45.00*
T	*M10 x 15*
U	*12.00*
V	*45.00*
$W_{(H8)}$	*10.00*
Y	*6.00*

**** All dimensions are given in millimeters.*

佳賀精機股份有限公司
AUTOGRIP MACHINERY CO., LTD.

FD-880
DOUBLE SLIDE FACING HEAD

COINED PLUNGER CAPABLE OF WORKING IN CONJUNCTION WITH SERVO MOTOR.

佳賀精機股份有限公司
AUTOGRIP MACHINERY CO., LTD.

* PLUNGER WITH THE ABILITY TO WORK IN CONJUNCTION WITH A SERVO MOTOR

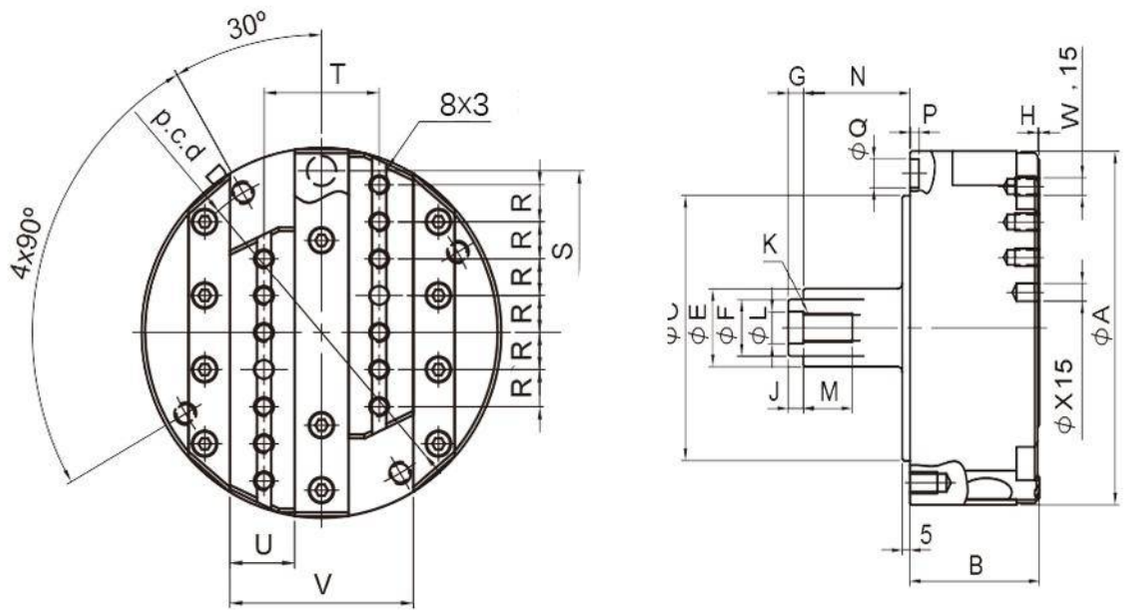

佳賀精機股份有限公司
AUTOGRIP MACHINERY CO., LTD.

Characteristics & Dimensions

Model	FD-880*
Plunger Stroke	*48.00*
Slide Stroke	*80.00*
Maximum Speed ***(r.p.m.)***	*2500.00*
Feeding Maximum Speed ***(mm/min)***	*1050.00*
Total Weight ***(Kg)***	*0.08*
Equivalent Cylinder	*17.00*
Maximum Pressure ***Mpa (Kgf/cm^2)***	*RS-1030N*
A	*200.00*
B	*85.00*
$C_{(H6)}$	*150.00*
D	*175.00*
E	*44.00*
F	*32.00*
$G_{máx}$	*58.00*
G_{min}	*10.00*
H	*1.00*
J	*10.00*
K	*M16 x 1.5*
$L_{(H7)}$	*18.00*
M	*32.00*
N	*70.00*
P	*6.00*
Q	*16.20*
R	*20.00*
S	*87.50*
T	*64.00*
U	*36.00*
V	*102.00*
W	*12 ~ M10*
$X_{(H7)}$	*10.00*

**** All dimensions are given in millimeters.*

佳賀精機股份有限公司
AUTOGRIP MACHINERY CO., LTD.

FD-1060
DOUBLE SLIDE FACING HEAD

COINED PLUNGER CAPABLE OF WORKING IN CONJUNCTION WITH SERVO MOTOR.

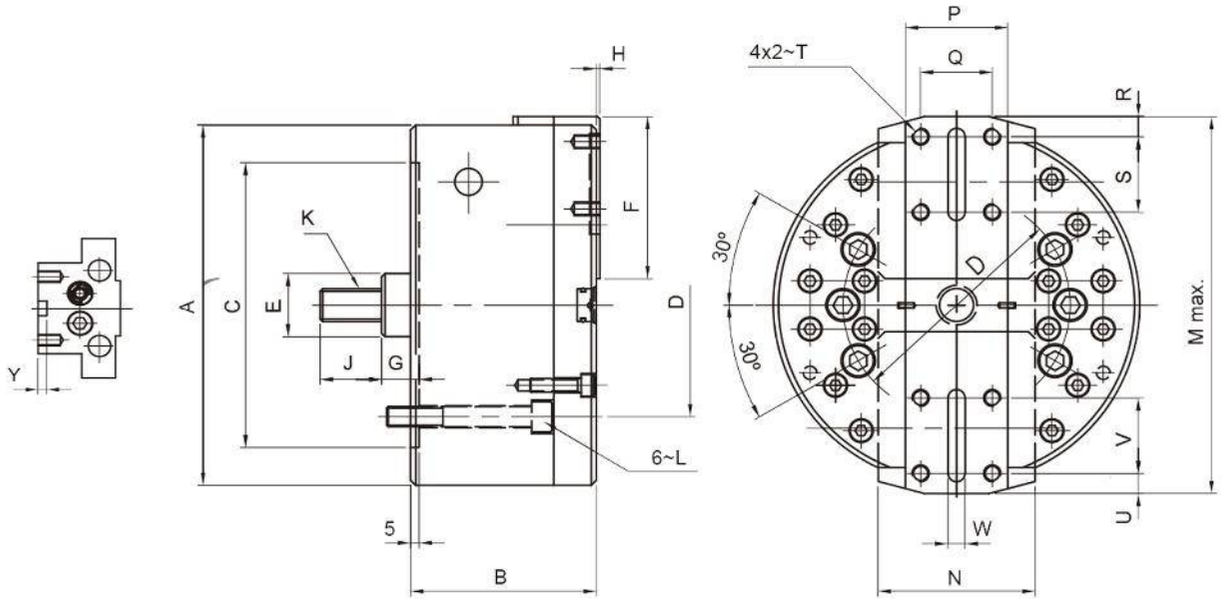

* LEVER TYPE, TO WORK IN CONJUNCTION WITH HYDRAULIC TRANSMISSIONS

佳賀精機股份有限公司
AUTOGRIP MACHINERY CO., LTD.

Characteristics & Dimensions

Model	FD-1060
Plunger Stroke	*35.00*
Slide Stroke	*60.00*
Maximum Speed ***(r.p.m.)***	*1800.00*
Feeding Maximum Speed ***(mm/min)***	*200.00*
Total Weight ***(Kg)***	*41.50*
Equivalent Cylinder	*RS-1040N*
Maximum Pressure ***Mpa (Kgf/cm^2)***	*3.0(30)*
A	*254.00*
B	*123.00*
$C_{(H7)}$	*220.00*
D	*171.40*
E	*38.00*
F	*110.50*
$G_{máx}$	*32.50*
G_{min}	*-2.50*
H	*4.00*
J	*36.00*
K	*M20 x 2.5*
L	*6 ~ M16 x 125*
M	*286.00*
N	*90.00*
P	*65.00*
Q	*46.00*
R	*15.00*
S	*50.00*
T	*M10 x 15*
U	*12.00*
V	*50.00*
$W_{(H8)}$	*10.00*
Y	*6.00*

**** All dimensions are given in millimeters.*

4ManPro

Elements For Manufacturing Processes

AUTOGRIP®

AUTOGRIP MACHINERY

RS SERIES

ROTATIVE HYDRAULIC CYLINDER WITH STROKE CONTROL

RS-75N

HYDRAULIC ROTARY CYLINDER WITH STROKE CONTROL

佳賀精機股份有限公司
AUTOGRIP MACHINERY CO., LTD.

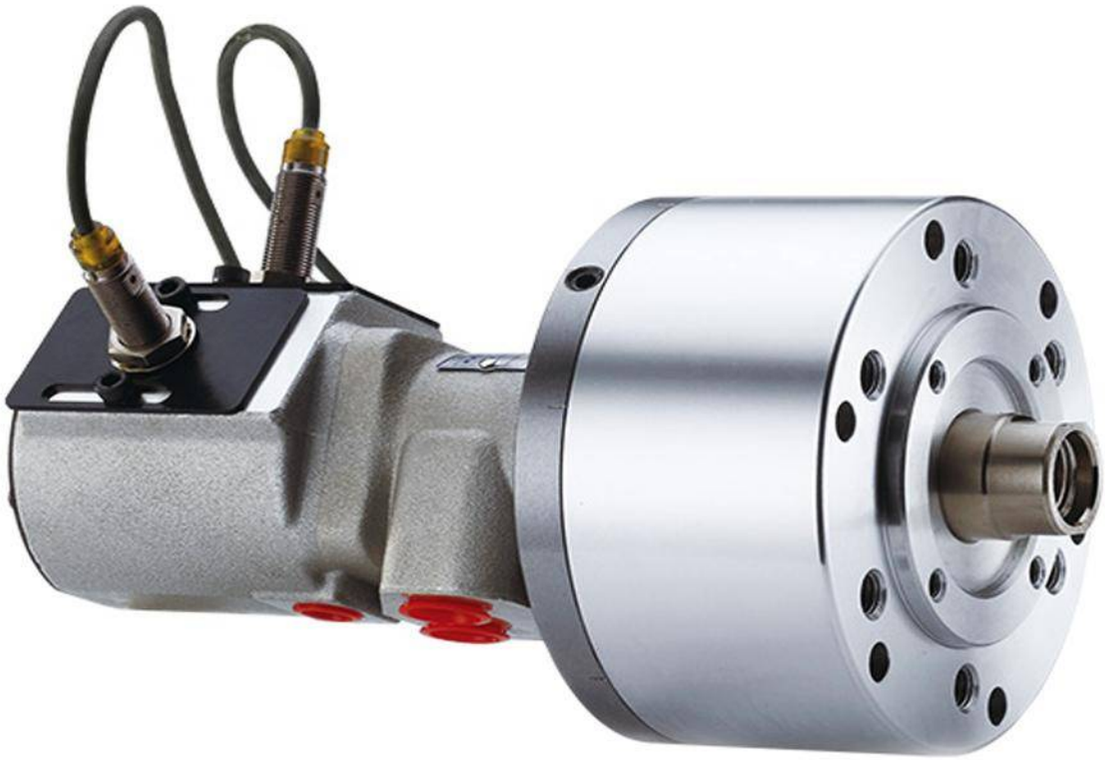

佳賀精機股份有限公司
AUTOGRIP MACHINERY CO., LTD.

Characteristics & Dimensions

Model	RS-75N
Extended Effective Piston Area *(cm^2)*	***43.00***
Retracted Effective Piston Area *(cm^2)*	***37.10***
Jaws Stroke	***15.00***
Maximum Speed *mm^{-1} (r.p.m.)*	***6,000.00***
Maximum Pressure *Mpa (Kgf/cm^2)*	***4.0 (40)***
Device Net Weight *(Kg)*	***3.40***

*** Proximity Sensor model **IFS287(IFM)** DC 10-30V 100mA NPN*
**** All dimensions are given in millimeters.*

佳賀精機股份有限公司
AUTOGRIP MACHINERY CO., LTD.

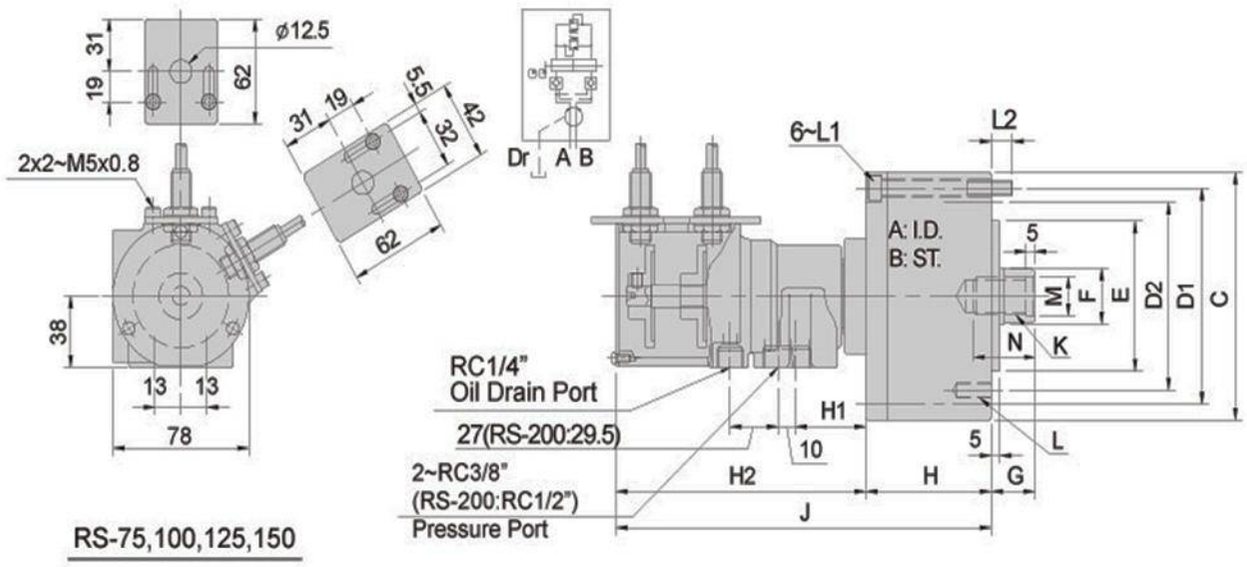

RS-75,100,125,150

佳賀精機股份有限公司
AUTOGRIP MACHINERY CO., LTD.

Characteristics & Dimensions

Model	RS-75N
A	75.00
B	15.00
C	107.00
D1	90.00
D2	90.00
$E_{(H7)}$	65.00
F	30.00
G_{MAX}	45.00
G_{MIN}	30.00
H	57.00
J	188.00
K	M20 x 2.50
L	6 ~ M8 x 16
L1	M6 x 60
L2	12.00
$M_{(H8)}$	21.00
U	35.00

*** Proximity Sensor model **IFS287(IFM)** DC 10-30V 100mA NPN*
**** All dimensions are given in millimeters.*

RS-100N

HYDRAULIC ROTARY CYLINDER WITH STROKE CONTROL

佳賀精機股份有限公司
AUTOGRIP MACHINERY CO., LTD.

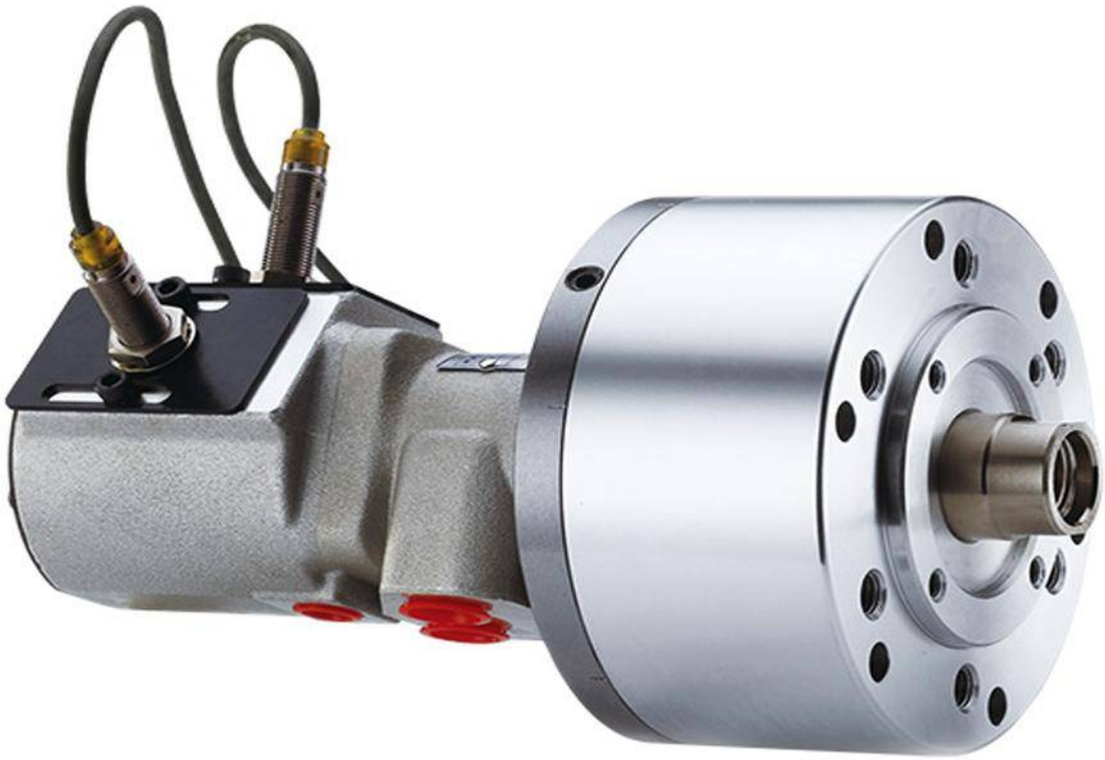

佳賀精機股份有限公司
AUTOGRIP MACHINERY CO., LTD.

Characteristics & Dimensions

Model	RS-100N
Extended Effective Piston Area *(cm^2)*	***77.40***
Retracted Effective Piston Area *(cm^2)*	***71.50***
Jaws Stroke	***20.00***
Maximum Speed *mm^{-1} (r.p.m.)*	***6,000.00***
Maximum Pressure *Mpa (Kgf/cm^2)*	***4.0 (40)***
Device Net Weight *(Kg)*	***4.90***

*** Proximity Sensor model **IFS287(IFM)** DC 10-30V 100mA NPN*
**** All dimensions are given in millimeters.*

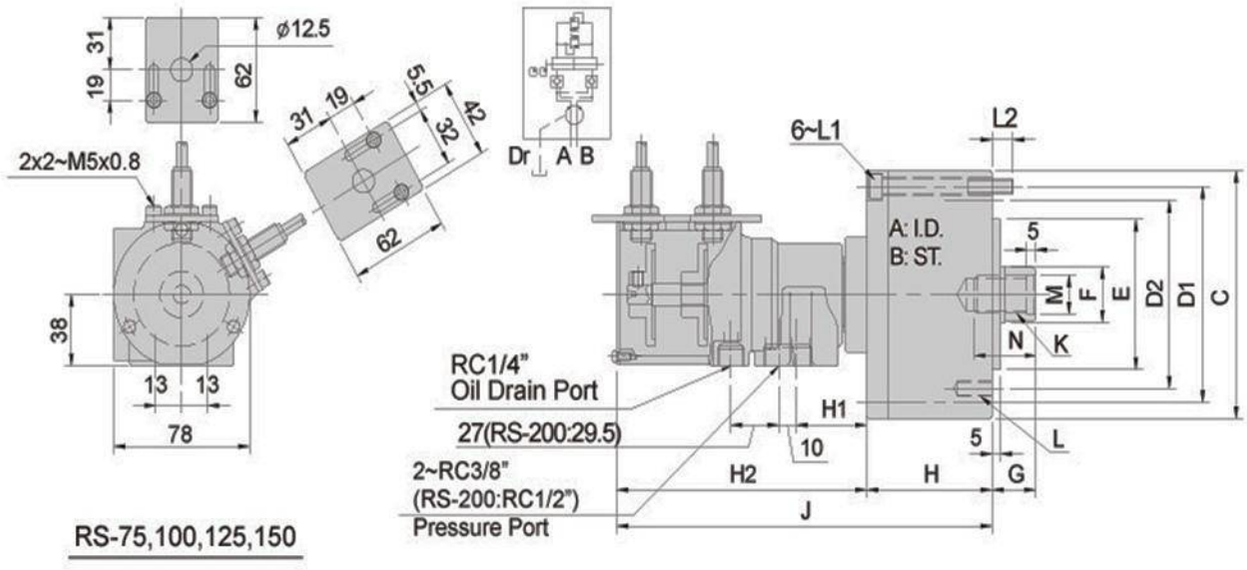

RS-75,100,125,150

佳賀精機股份有限公司
AUTOGRIP MACHINERY CO., LTD.

Characteristics & Dimensions

Model	RS-100N
A	100.00
B	20.00
C	132.00
D1	115.00
D2	100.00
$E_{(H7)}$	80.00
F	30.00
G_{MAX}	45.00
G_{MIN}	25.00
H	72.00
J	203.00
K	M20 x 2.50
L	6 ~ M10 x 20
L1	M8 x 75
L2	12.00
$M_{(H8)}$	21.00
U	35.00

** Proximity Sensor model **IFS287(IFM)** DC 10-30V 100mA NPN
*** All dimensions are given in millimeters.

RS-125N

HYDRAULIC ROTARY CYLINDER WITH STROKE CONTROL

佳賀精機股份有限公司
AUTOGRIP MACHINERY CO., LTD.

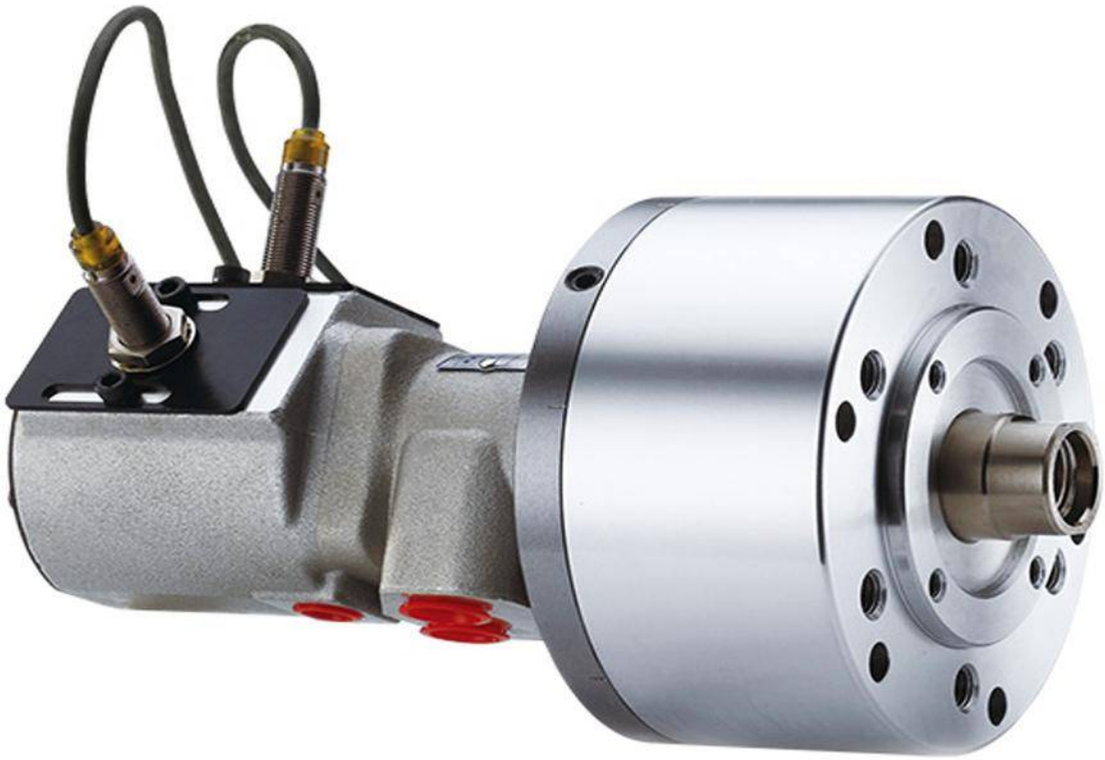

佳賀精機股份有限公司
AUTOGRIP MACHINERY CO., LTD.

Characteristics & Dimensions

Model	RS-125N
Extended Effective Piston Area *(cm^2)*	***121.60***
Retracted Effective Piston Area *(cm^2)*	***113.10***
Jaws Stroke	***25.00***
Maximum Speed *mm^{-1} (r.p.m.)*	***6,000.00***
Maximum Pressure *Mpa (Kgf/cm^2)*	***4.0 (40)***
Device Net Weight *(Kg)*	***7.30***

*** Proximity Sensor model **IFS287(IFM)** DC 10-30V 100mA NPN*
**** All dimensions are given in millimeters.*

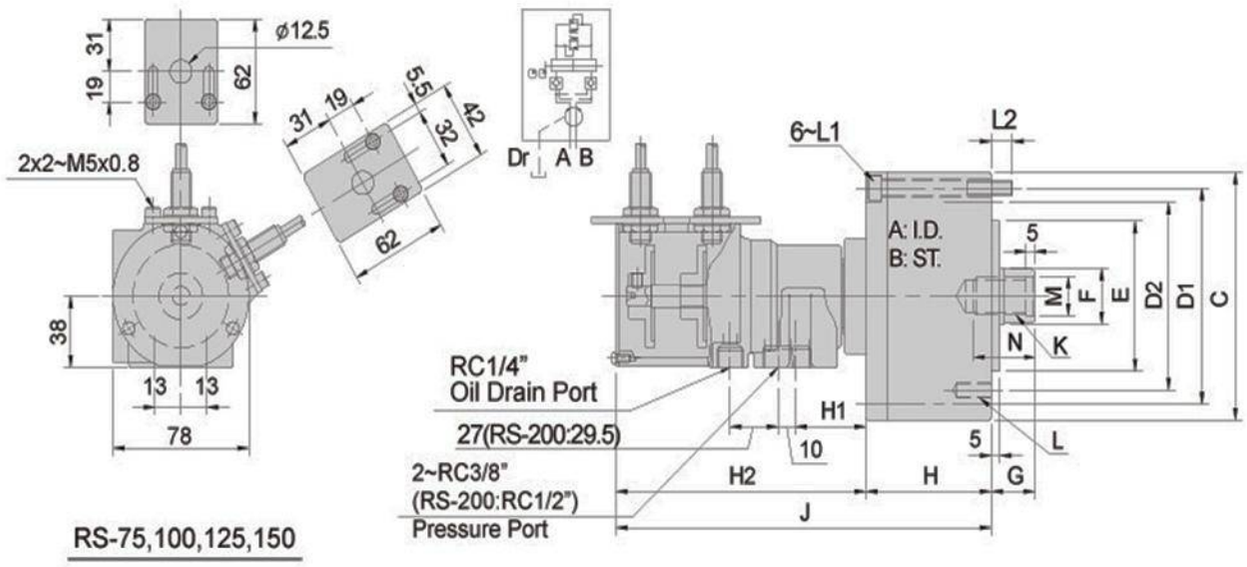

RS-75,100,125,150

佳賀精機股份有限公司
AUTOGRIP MACHINERY CO., LTD.

Characteristics & Dimensions

Model	RS-125N
A	125.00
B	25.00
C	160.00
D1	140.00
D2	130.00
$E_{(H7)}$	110.00
F	35.00
G_{MAX}	50.00
G_{MIN}	25.00
H	82.00
J	213.00
K	M24 x 3.00
L	6 ~ M12 x 20
L1	M8 x 85
L2	12.00
$M_{(H8)}$	25.00
U	45.00

** Proximity Sensor model **IFS287(IFM)** DC 10-30V 100mA NPN
*** All dimensions are given in millimeters.

RS-150N

HYDRAULIC ROTARY CYLINDER WITH STROKE CONTROL

佳賀精機股份有限公司
AUTOGRIP MACHINERY CO., LTD.

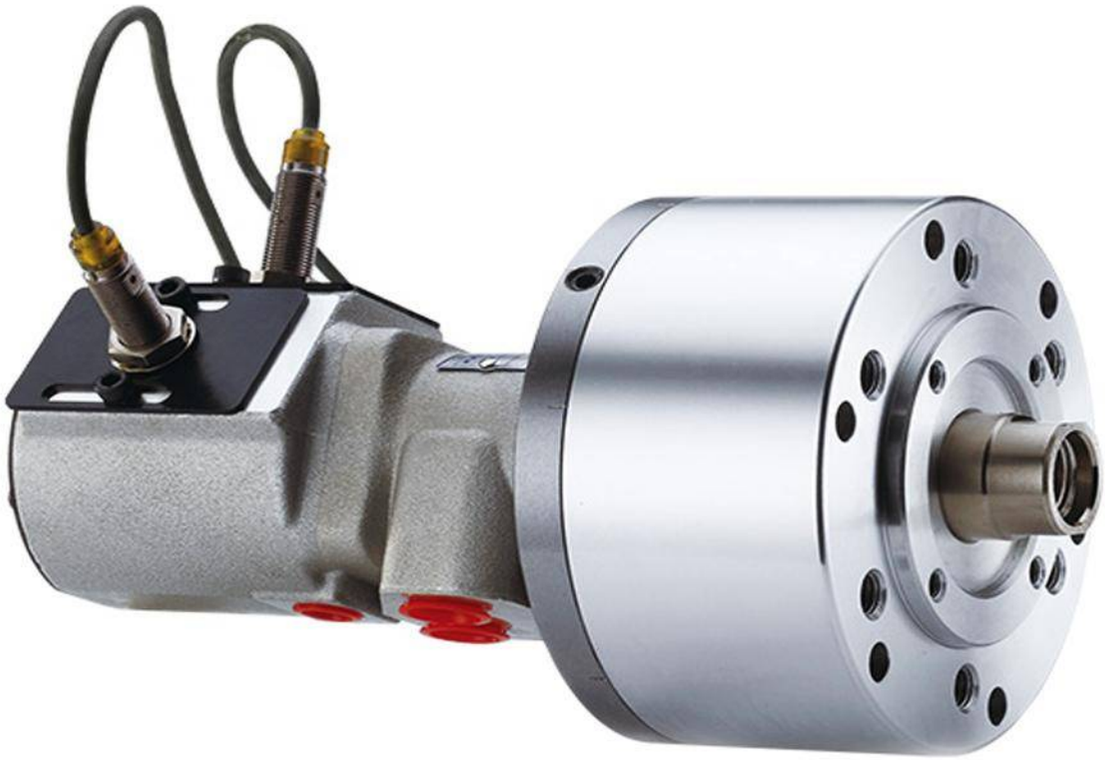

佳賀精機股份有限公司
AUTOGRIP MACHINERY CO., LTD.

Characteristics & Dimensions

Model	RS-150N
Extended Effective Piston Area *(cm^2)*	***175.60***
Retracted Effective Piston Area *(cm^2)*	***160.80***
Jaws Stroke	***30.00***
Maximum Speed *mm^{-1} (r.p.m.)*	***5,500.00***
Maximum Pressure *Mpa (Kgf/cm^2)*	***4.0 (40)***
Device Net Weight *(Kg)*	***10.60***

*** Proximity Sensor model **IFS287(IFM)** DC 10-30V 100mA NPN*
**** All dimensions are given in millimeters.*

佳賀精機股份有限公司
AUTOGRIP MACHINERY CO., LTD.

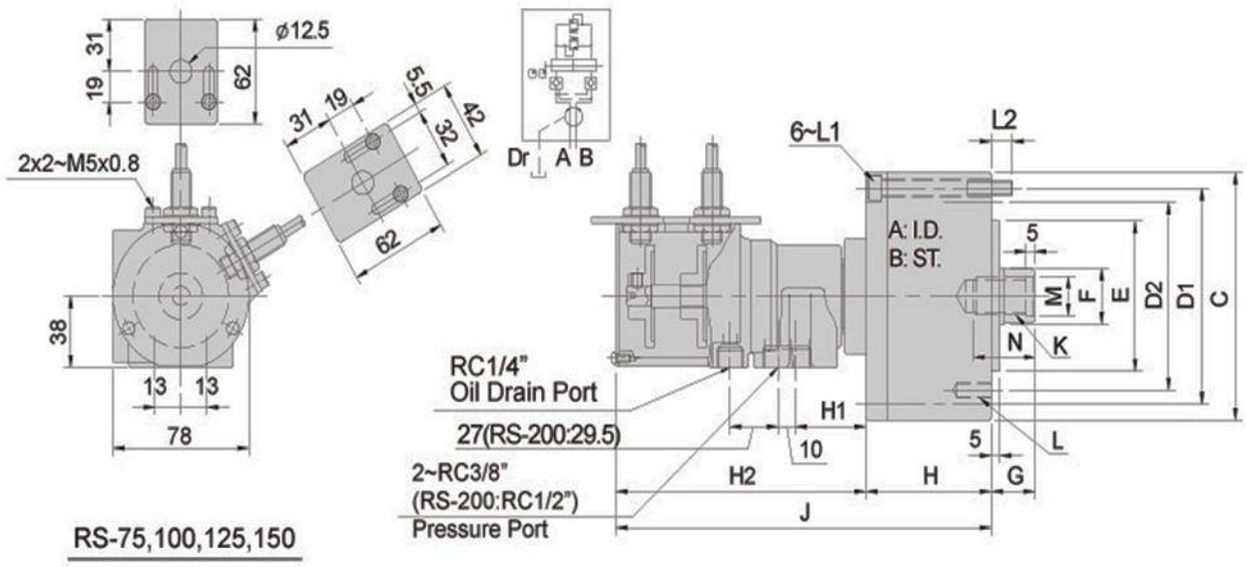

RS-75,100,125,150

佳賀精機股份有限公司
AUTOGRIP MACHINERY CO., LTD.

Characteristics & Dimensions

Model	RS-150N
A	150.00
B	30.00
C	190.00
D1	170.00
D2	130.00
$E_{(H7)}$	110.00
F	45.00
G_{MAX}	55.00
G_{MIN}	25.00
H	95.00
J	226.00
K	M30 x 3.50
L	12 ~ M12 x 24
L1	M10 x 100
L2	16.00
$M_{(H8)}$	32.00
U	45.00

** Proximity Sensor model **IFS287(IFM)** DC 10-30V 100mA NPN
*** All dimensions are given in millimeters.

RS-200N

HYDRAULIC ROTARY CYLINDER WITH STROKE CONTROL

佳賀精機股份有限公司
AUTOGRIP MACHINERY CO., LTD.

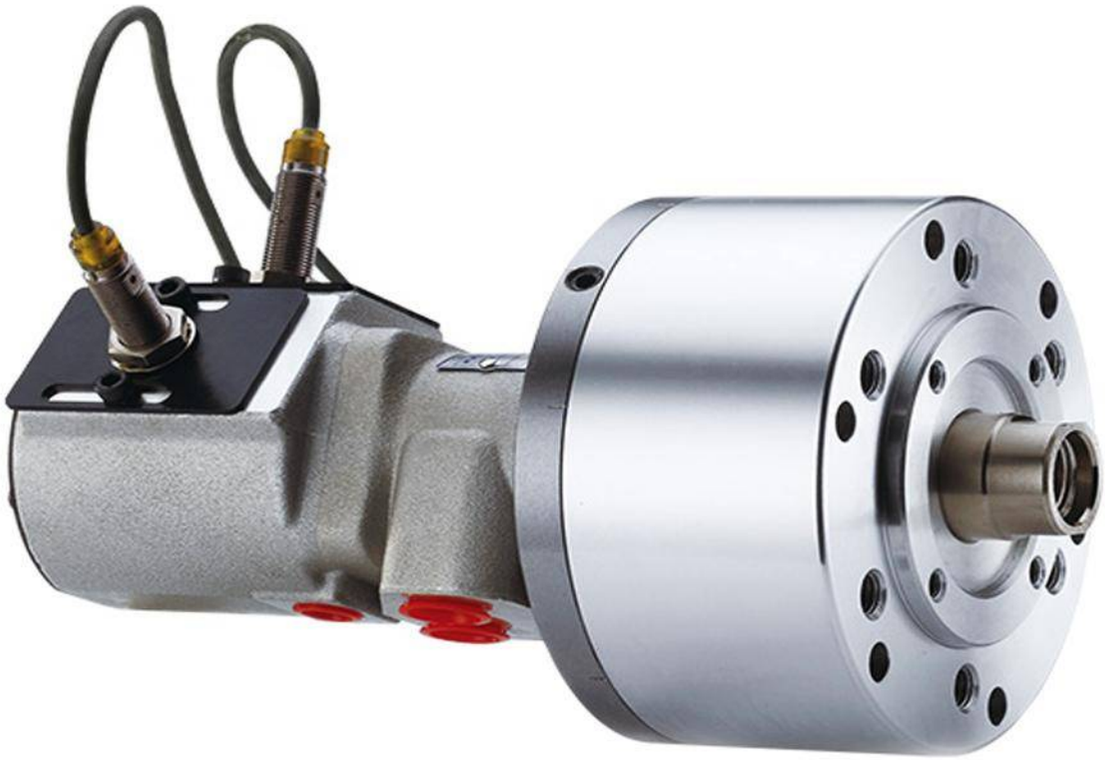

佳賀精機股份有限公司
AUTOGRIP MACHINERY CO., LTD.

Characteristics & Dimensions

Model	RS-200N
Extended Effective Piston Area *(cm^2)*	***313.00***
Retracted Effective Piston Area *(cm^2)*	***290.40***
Jaws Stroke	***35.00***
Maximum Speed *mm^{-1} (r.p.m.)*	***5,500.00***
Maximum Pressure *Mpa (Kgf/cm^2)*	***4.0 (40)***
Device Net Weight *(Kg)*	***15.90***

*** Proximity Sensor model **IFS287(IFM)** DC 10-30V 100mA NPN*
**** All dimensions are given in millimeters.*

佳賀精機股份有限公司
AUTOGRIP MACHINERY CO., LTD.

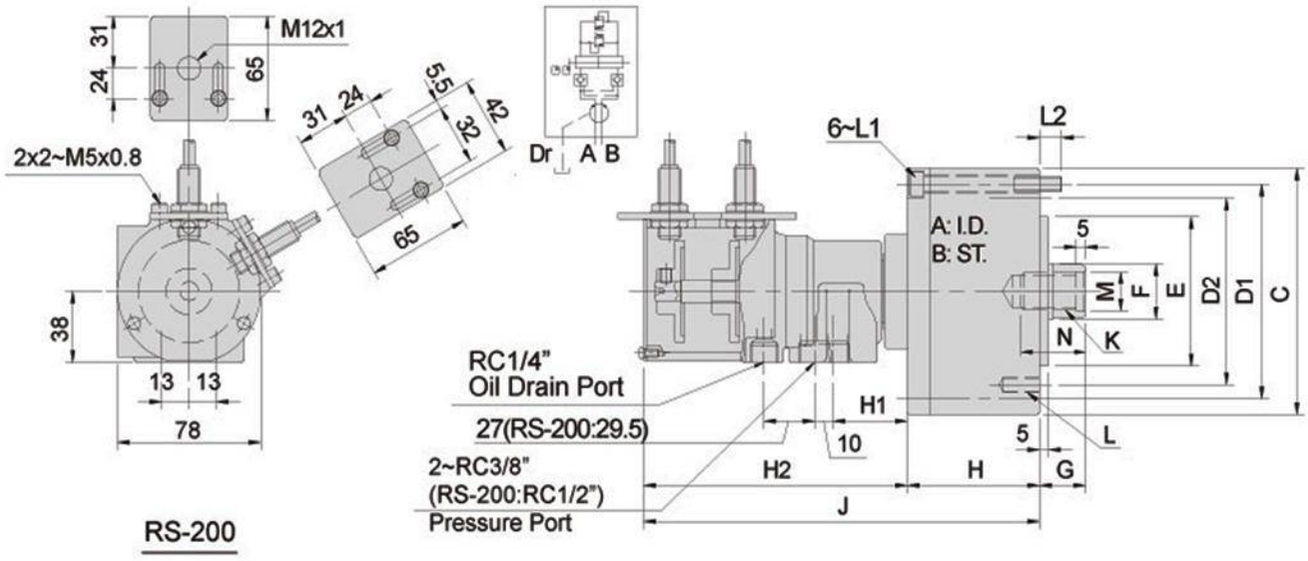

RS-200

Characteristics & Dimensions

Model	RS-6520N
A	65.00
B	20.00
C	97.00
D1	80.00
D2	80.00
$E_{(H7)}$	60.00
F	25.00
G_{MAX}	45.00
G_{MIN}	25.00
H	62.00
J	193.00
K	M16 x 2.00
L	6 ~ M8 x 16
L1	M6 x 70
L2	14.50
$M_{(H8)}$	17.00
U	30.00

** Proximity Sensor model **IFS287(IFM)** DC 10-30V 100mA NPN
*** All dimensions are given in millimeters.

RS-6520N

HYDRAULIC ROTARY CYLINDER WITH STROKE CONTROL

佳賀精機股份有限公司
AUTOGRIP MACHINERY CO., LTD.

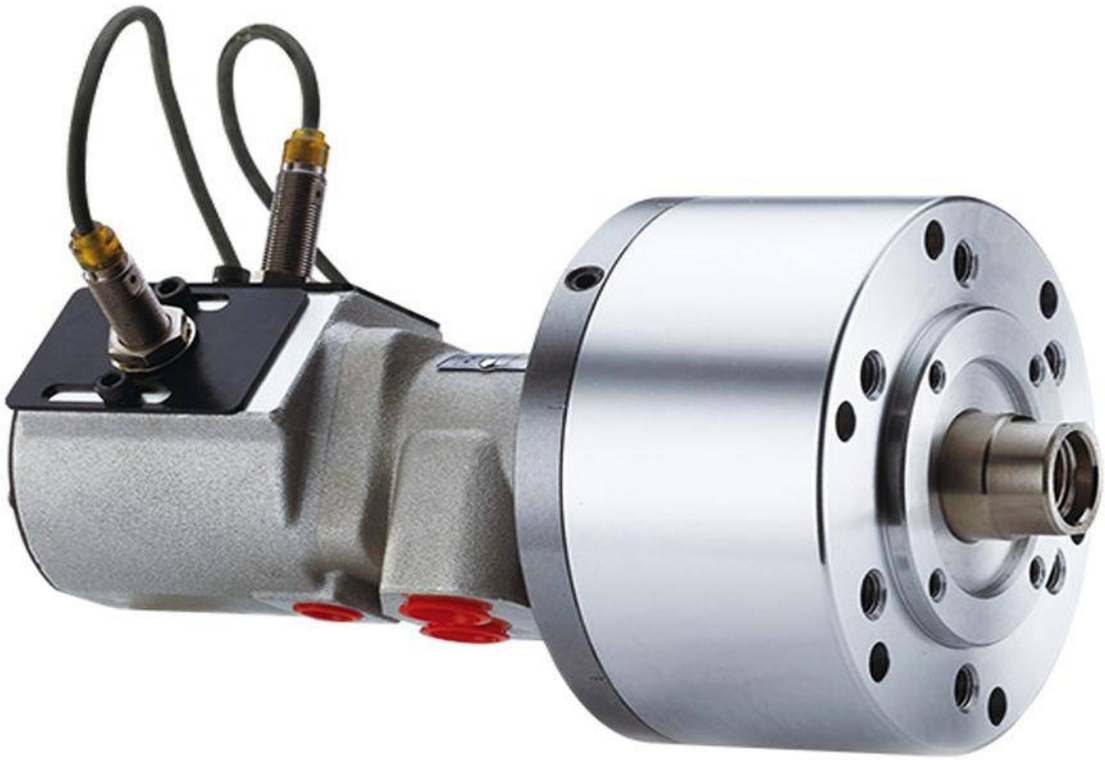

Characteristics & Dimensions

Model	RS-6520N
Extended Effective Piston Area *(cm^2)*	***32.00***
Retracted Effective Piston Area *(cm^2)*	***28.30***
Jaws Stroke	***20.00***
Maximum Speed *mm^{-1} (r.p.m.)*	***6,000.00***
Maximum Pressure *Mpa (Kgf/cm^2)*	***4.0 (40)***
Device Net Weight *(Kg)*	***3.20***

*** Proximity Sensor model **IFS287(IFM)** DC 10-30V 100mA NPN*
**** All dimensions are given in millimeters.*

佳賀精機股份有限公司
AUTOGRIP MACHINERY CO., LTD.

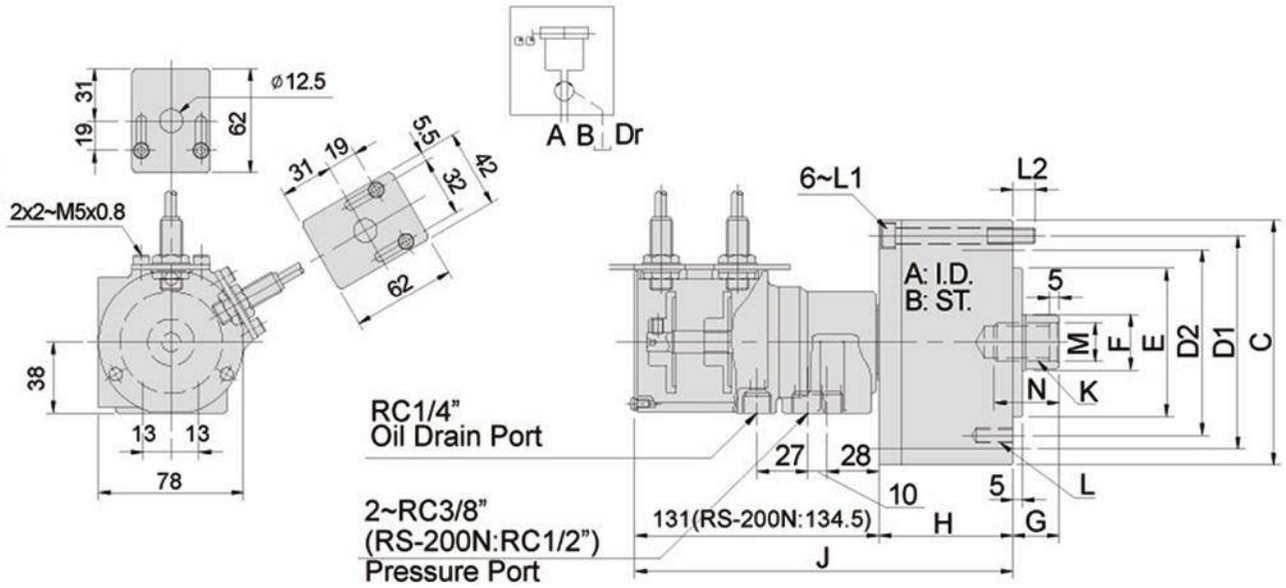

佳賀精機股份有限公司
AUTOGRIP MACHINERY CO., LTD.

Characteristics & Dimensions

Model	RS-200N
A	200.00
B	35.00
C	245.00
D1	220.00
D2	145.00
$E_{(H7)}$	120.00
F	55.00
G_{MAX}	75.00
G_{MIN}	35.00
H	115.00
J	249.50
K	M36 x 4.00
L	12 ~M12 x 30
L1	M10 x 125
L2	21.00
$M_{(H8)}$	27.00
U	60.00

** Proximity Sensor model **IFS287(IFM)** DC 10-30V 100mA NPN
*** All dimensions are given in millimeters.

RS-6530N

HYDRAULIC ROTARY CYLINDER WITH STROKE CONTROL

佳賀精機股份有限公司
AUTOGRIP MACHINERY CO., LTD.

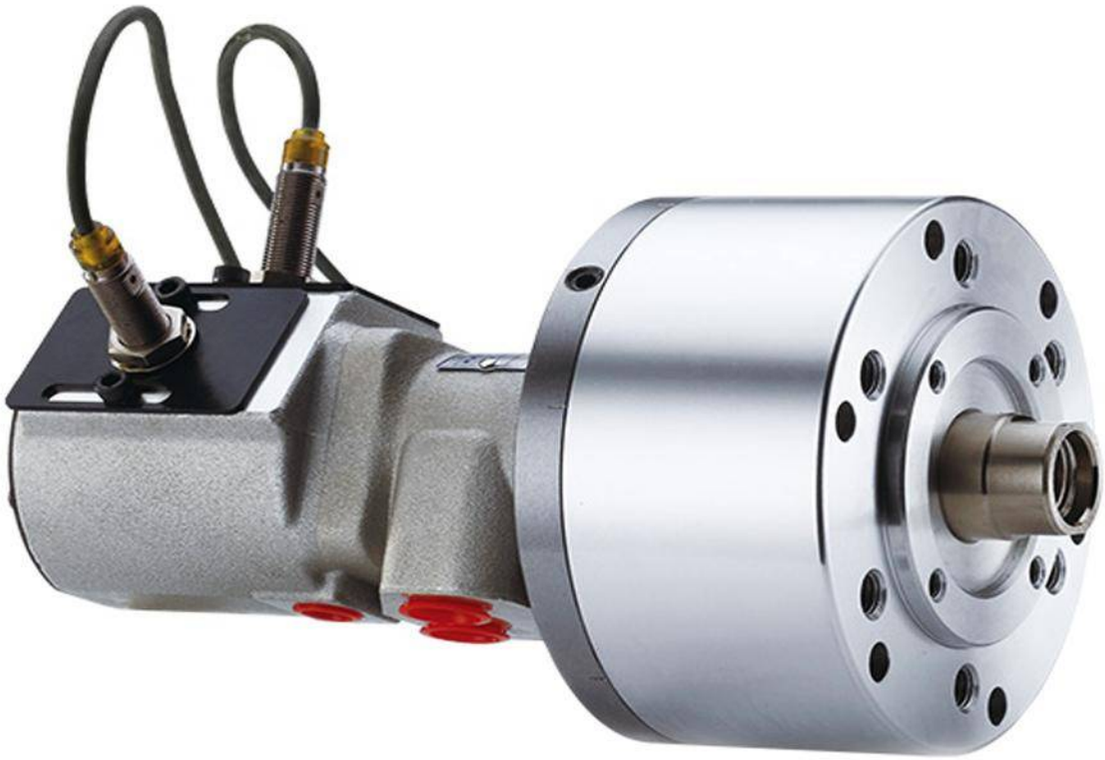

佳賀精機股份有限公司
AUTOGRIP MACHINERY CO., LTD.

Characteristics & Dimensions

Model	RS-6530N
Extended Effective Piston Area *(cm^2)*	***32.00***
Retracted Effective Piston Area *(cm^2)*	***28.30***
Jaws Stroke	***30.00***
Maximum Speed *mm^{-1} (r.p.m.)*	***6,000.00***
Maximum Pressure *Mpa (Kgf/cm^2)*	***4.0 (40)***
Device Net Weight *(Kg)*	***3.30***

*** Proximity Sensor model **IFS287(IFM)** DC 10-30V 100mA NPN*
**** All dimensions are given in millimeters.*

佳賀精機股份有限公司
AUTOGRIP MACHINERY CO., LTD.

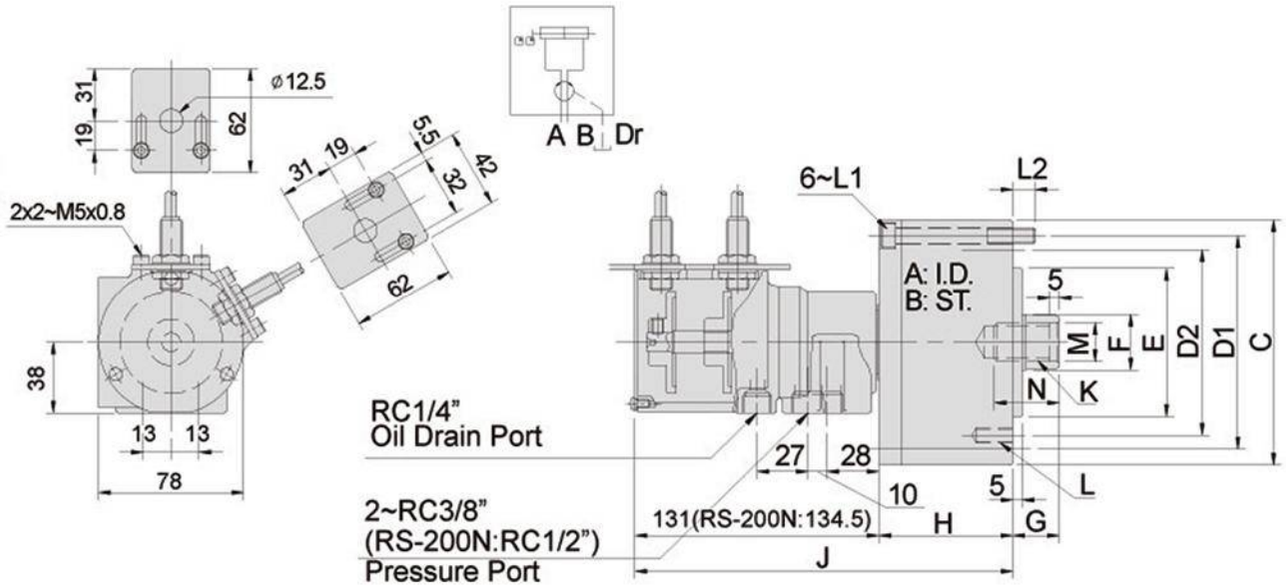

佳賀精機股份有限公司
AUTOGRIP MACHINERY CO., LTD.

Characteristics & Dimensions

Model	RS-7530N
A	*75.00*
B	*30.00*
C	*107.00*
D1	*90.00*
D2	*90.00*
$E_{(H7)}$	*65.00*
F	*30.00*
G_{MAX}	*45.00*
G_{MIN}	*15.00*
H	*72.00*
J	*203.00*
K	*M20 x 2.50*
L	*6 ~ M8 x 16*
L1	*M8 x 75*
L2	*12.00*
$M_{(H8)}$	*21.00*
U	*35.00*

*** Proximity Sensor model **IFS287(IFM)** DC 10-30V 100mA NPN*
**** All dimensions are given in millimeters.*

RS-7530N

HYDRAULIC ROTARY CYLINDER WITH STROKE CONTROL

佳賀精機股份有限公司
AUTOGRIP MACHINERY CO., LTD.

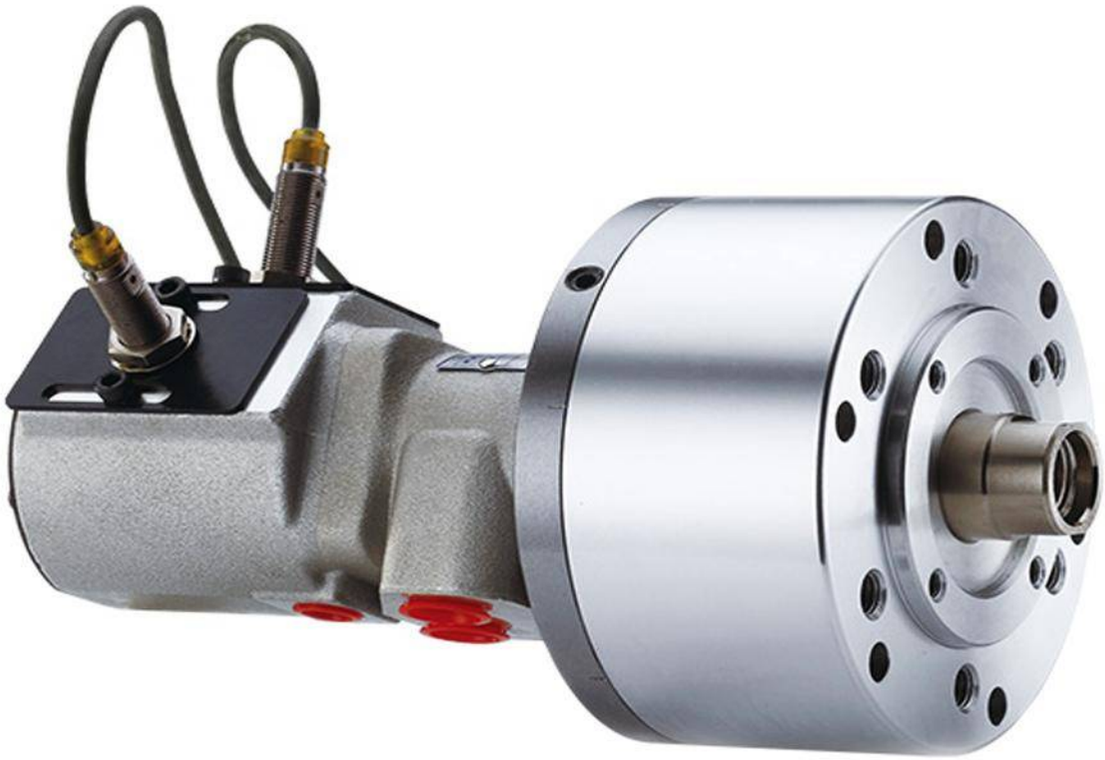

佳賀精機股份有限公司
AUTOGRIP MACHINERY CO., LTD.

Characteristics & Dimensions

Model	RS-7530N
Extended Effective Piston Area *(cm^2)*	***43.00***
Retracted Effective Piston Area *(cm^2)*	***37.10***
Jaws Stroke	***30.00***
Maximum Speed *mm^{-1} (r.p.m.)*	***6,000.00***
Maximum Pressure *Mpa (Kgf/cm^2)*	***4.0 (40)***
Device Net Weight *(Kg)*	***3.70***

*** Proximity Sensor model **IFS287(IFM)** DC 10-30V 100mA NPN*
**** All dimensions are given in millimeters.*

佳賀精機股份有限公司
AUTOGRIP MACHINERY CO., LTD.

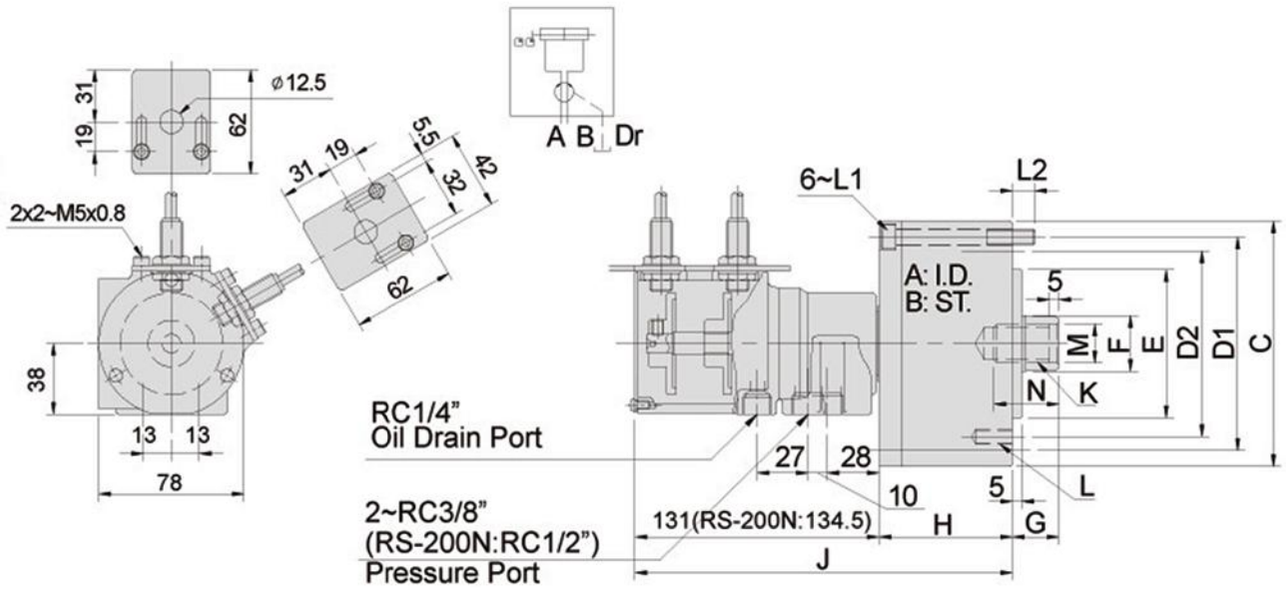

佳賀精機股份有限公司
AUTOGRIP MACHINERY CO., LTD.

Characteristics & Dimensions

Model	RS-6530N
A	65.00
B	30.00
C	97.00
D1	80.00
D2	80.00
$E_{(H7)}$	60.00
F	25.00
G_{MAX}	45.00
G_{MIN}	15.00
H	62.00
J	203.00
K	M16 x 2.00
L	6 ~ M8 x 16
L1	M6 x 80
L2	14.50
$M_{(H8)}$	17.00
U	30.00

*** Proximity Sensor model **IFS287(IFM)** DC 10-30V 100mA NPN*

**** All dimensions are given in millimeters.*

4ManPro

Elements For Manufacturing Processes

AUTOGRIP®

AUTOGRIP MACHINERY

RJ SERIES

ROTATING JOINTS FOR LUBRICATION/COOLING

RJ-50

ROTATING JOINT
FOR COOLING/LUBRICATING

佳賀精機股份有限公司
AUTOGRIP MACHINERY CO., LTD.

佳賀精機股份有限公司
AUTOGRIP MACHINERY CO., LTD.

Characteristics & Dimensions

Model	RJ-50
Maximum Working Pressure *Mpa (Kgf/cm²)*	***3.00 (30.00)***
Distributed Volume Of Liquid By Device *(at 50 kgf/cm²) (l/min)*	***28.00***
Maximum Speed *(r.p.m.)*	***3,500.00***
Device Weight *(Kg)*	***0.40***

**** All dimensions are given in millimeters.*

佳賀精機股份有限公司
AUTOGRIP MACHINERY CO., LTD.

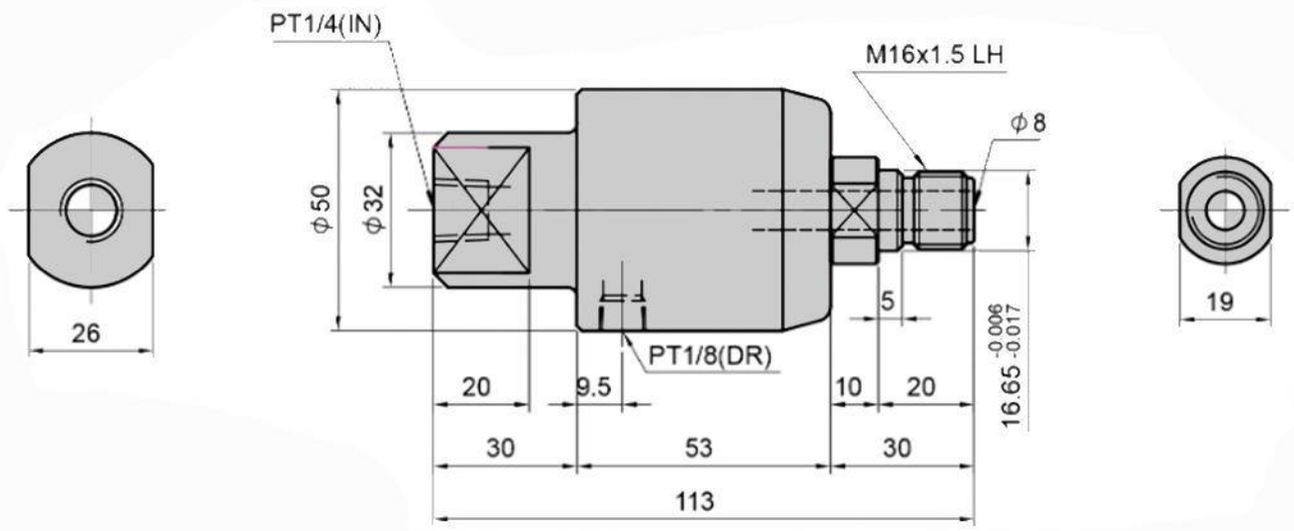

RJ-80

ROTATING JOINT
FOR COOLING/LUBRICATING

佳賀精機股份有限公司
AUTOGRIP MACHINERY CO., LTD.

佳賀精機股份有限公司
AUTOGRIP MACHINERY CO., LTD.

Characteristics & Dimensions

Model	RJ-80
Maximum Working Pressure *Mpa (Kgf/cm²)*	***3.00 (30.00)***
Distributed Volume Of Liquid By Device *(at 50 kgf/cm²) (l/min)*	***28.00***
Maximum Speed *(r.p.m.)*	***3,500.00***
Device Weight *(Kg)*	***0.40***

**** All dimensions are given in millimeters.*

佳賀精機股份有限公司
AUTOGRIP MACHINERY CO., LTD.

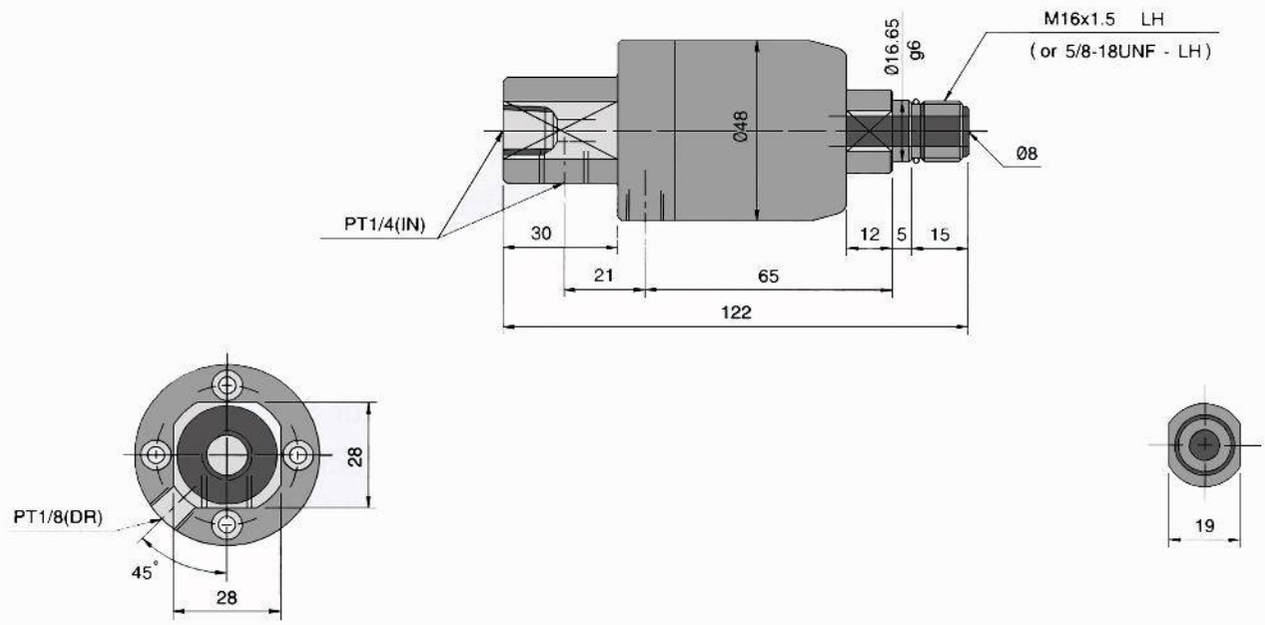

RJ-90

ROTATING JOINT FOR COOLING/LUBRICATING

佳賀精機股份有限公司
AUTOGRIP MACHINERY CO., LTD.

佳賀精機股份有限公司
AUTOGRIP MACHINERY CO., LTD.

Characteristics & Dimensions

Model	RJ-90
Maximum Working Pressure *Mpa (Kgf/cm²)*	***7.00 (70.00)***
Distributed Volume Of Liquid By Device *(at 50 kgf/cm²) (l/min)*	***28.00***
Maximum Speed *(r.p.m.)*	***10,000.00***
Device Weight *(Kg)*	***0.50***

**** All dimensions are given in millimeters.*

佳賀精機股份有限公司
AUTOGRIP MACHINERY CO., LTD.

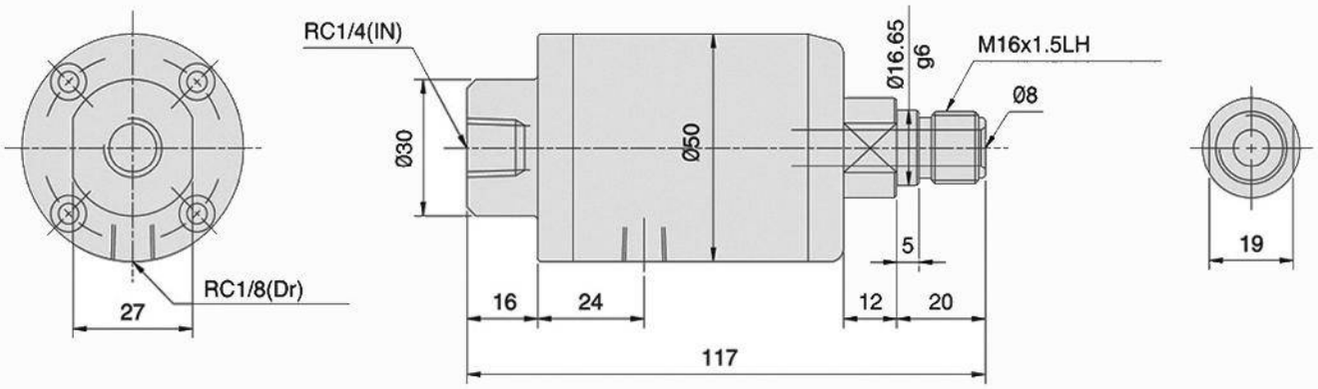

4ManPro

Elements For Manufacturing Processes

AUTOGRIP®

AUTOGRIP MACHINERY

RV SERIES

HYDRAULIC/NEUMATIC ROTATIVE VALVES

RV-31H

HYDRAULIC ROTATIVE VALVE

佳賀精機股份有限公司
AUTOGRIP MACHINERY CO., LTD.

佳賀精機股份有限公司
AUTOGRIP MACHINERY CO., LTD.

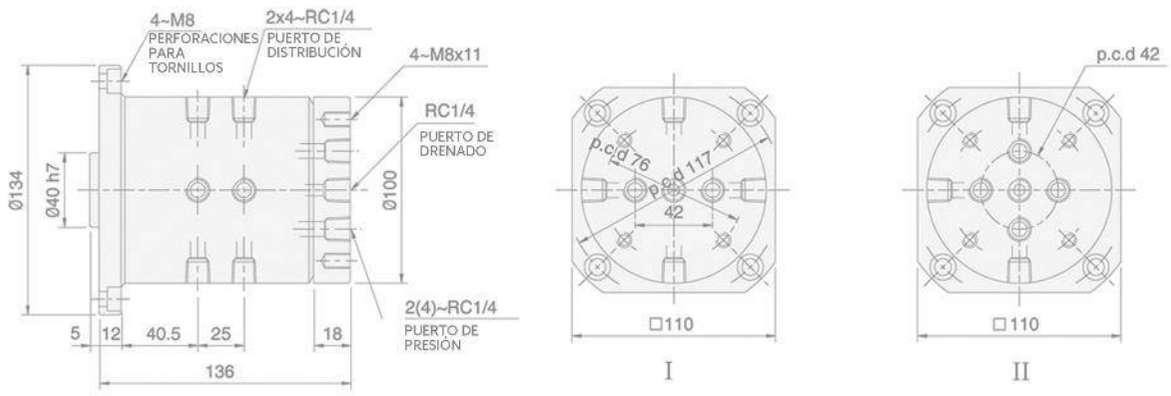

* ESTE PRODUCTO PUEDE SUFRIR MODIFICACIONES SIN PREVIO AVISO

Characteristics & Dimensions

Model	RV-311H
Port Number	***4.00***
Port Distribution	***Under Customer's Request***
Maximum Working Pressure *MPa (kgf/cm²)*	***4.00 (40.00)***
Device Total Weight (Kg)	***7.40***

** All dimensions are given in millimeters.*

RV-71H

HIDRAULIC ROTATIVE VALVE

佳賀精機股份有限公司
AUTOGRIP MACHINERY CO., LTD.

佳賀精機股份有限公司
AUTOGRIP MACHINERY CO., LTD.

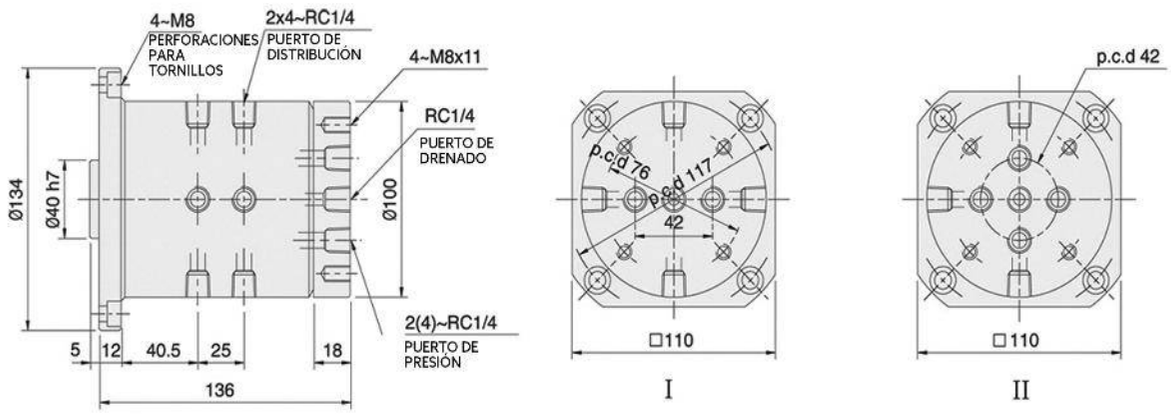

* ESTE PRODUCTO PUEDE SUFRIR MODIFICACIONES SIN PREVIO AVISO

Characteristics

Model	RV-A71H
Port Number	***8.00***
Port Distribution	***Under Customer's Request***
Maximum Working Pressure *MPa (kgf/cm²)*	***4.00 (40.00)***
Device Total Weight (Kg)	***7.40***

** All dimensions are given in millimeters.*

RV-A31H

PNEUMATIC ROTATIVE VALVE

佳賀精機股份有限公司
AUTOGRIP MACHINERY CO., LTD.

佳賀精機股份有限公司
AUTOGRIP MACHINERY CO., LTD.

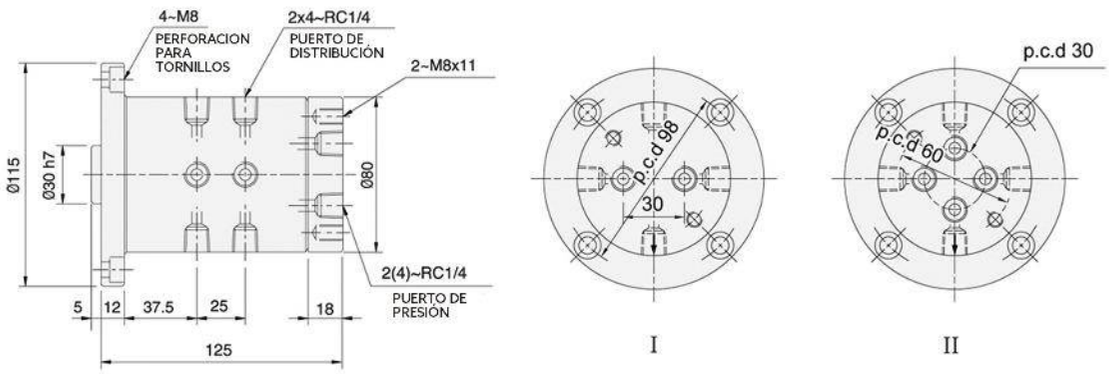

* ESTE PRODUCTO PUEDE SUFRIR MODIFICACIONES TECNICAS SIN PREVIO AVISO

Characteristics

Model	RV-A31H
Port Number	***4.00***
Port Distribution	***Under Customer's Request***
Maximum Working Pressure *MPa (kgf/cm²)*	***0.80 (8.00)***
Device Total Weight (Kg)	***4.80***

** All dimensions are given in millimeters.*

RV-A71H

PNEUMATIC ROTATIVE VALVE

佳賀精機股份有限公司
AUTOGRIP MACHINERY CO., LTD.

佳賀精機股份有限公司
AUTOGRIP MACHINERY CO., LTD.

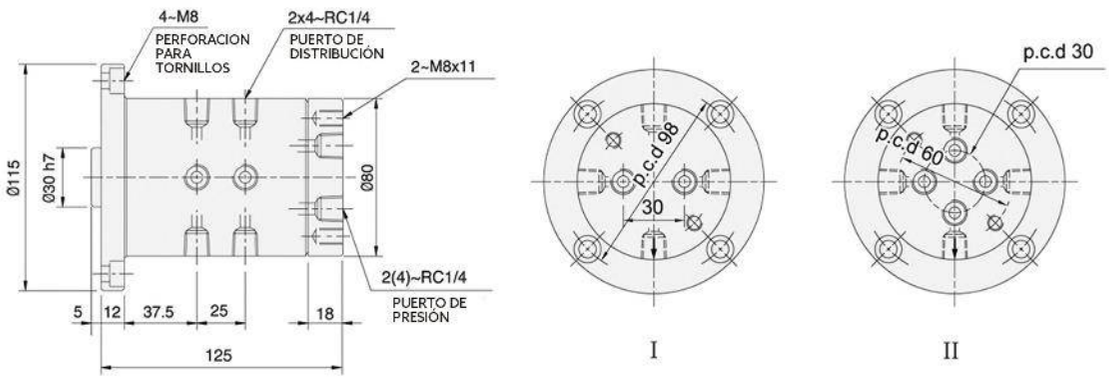

* ESTE PRODUCTO PUEDE SUFRIR MODIFICACIONES TECNICAS SIN PREVIO AVISO

Characteristics

Model	RV-A71H
Port Number	***8.00***
Port Distribution	***Under Customer's Request***
Maximum Working Pressure *MPa (kgf/cm²)*	***0.80 (8.00)***
Device Total Weight (Kg)	***4.80***

** All dimensions are given in millimeters.*

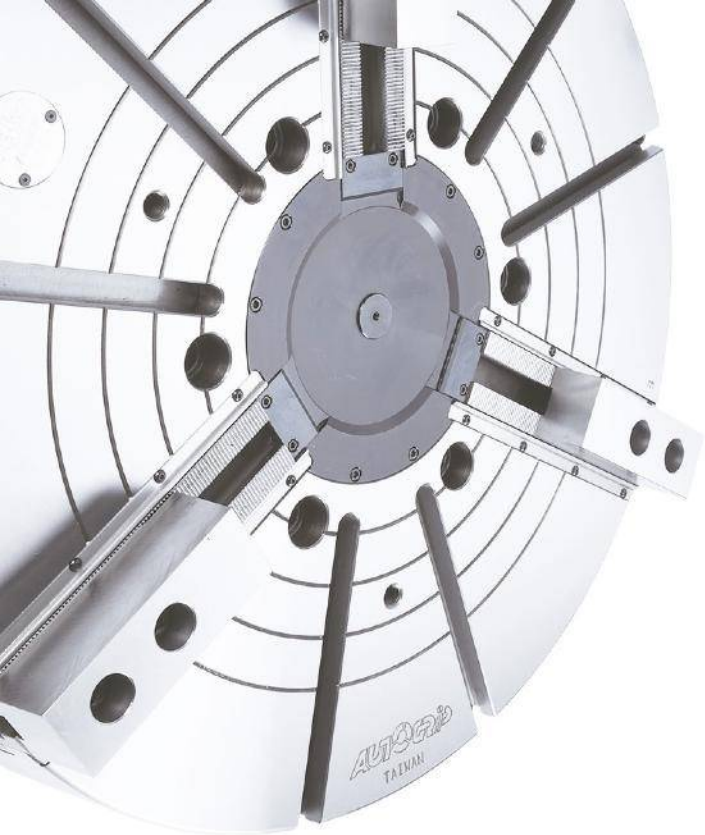

4ManPro
Mexico Branch Office
Elements For Manufacturing Processes

MEXICO BRANCH OFFICE
Roberto Diaz No. 401
Ciudad Industrial
Aguascalientes, Ags.
México
20290

4ManPro@4ManPro.com
(449) 171 3420
www.4ManPro.com/SPA/

USA BRANCH OFFICE
Pennzoil Place
700 Milam
Suite 1300
Houston, Tx, USA
77002

4ManPro-USA@4ManPro.com
+1 (832) 871 5022
www.4ManPro.com/ENG/

Elements For Manufacturing Processes