4ManPro

Elements For Manufacturing Processes

H-CNC SERIES

CNC
SPINDLES

HB150-BT40

Belt Driven Spindle

Characteristics & Dimensions

MODEL	HB150
Specification	*BT40 - Ø150*
Maximum Spindle Speed *(r.p.m.)*	*8,000 R.P.M.*
Bearings Specification	*7014 x 2 | 7014 x 2*
Bearings Type	*Large Steel Balls*
Lubrication Type	*Grease*
Bearing Temparature Rise	*+ 18.00° C*
Position	*By Notch*
Device Coolong Media	*By Oil*
Taper Runout	*0.002 mm*
Balance Grade	*G1*
Total Device Weight *(Kg)*	*55.00*

**** Taper Runout Precission ≤ 0.003 mm.*
**** All dimensions are given in millimeters.*

HB150-BT40

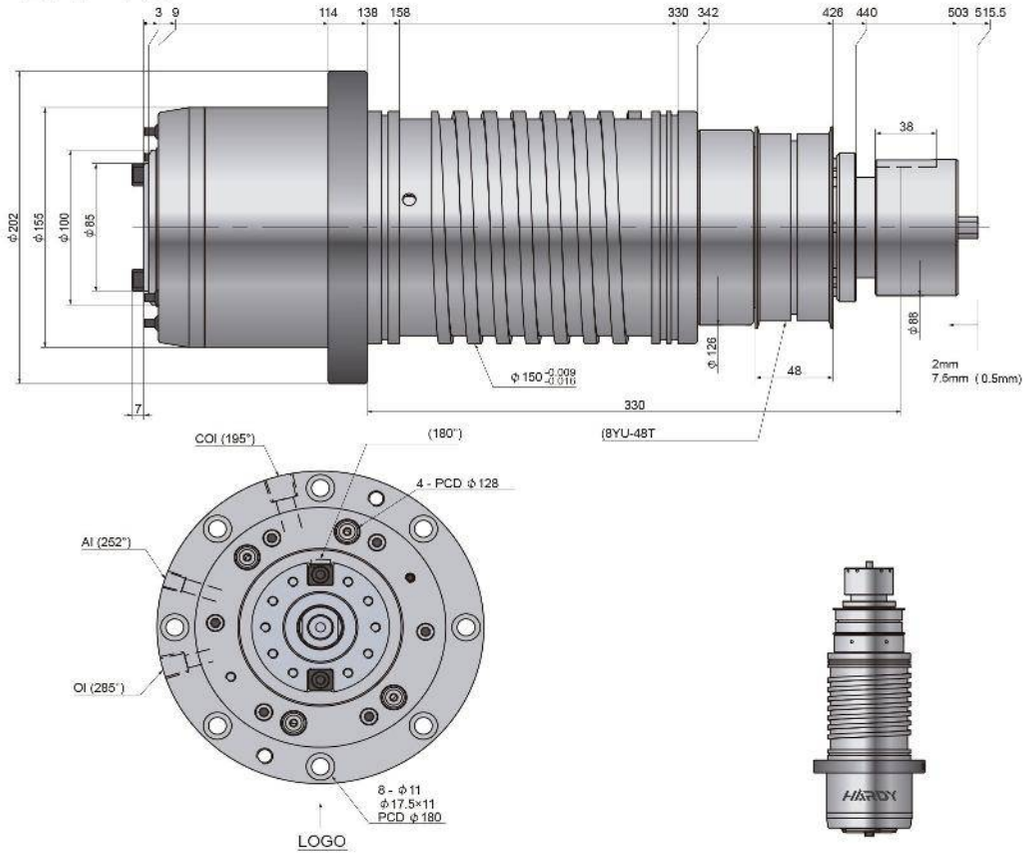
3 9 114 138 158 330 342 426 440 503 515.5
38
ϕ202
ϕ155
ϕ100
ϕ85
ϕ150 -0.009 -0.016
ϕ126
48
ϕ88
2mm
7.5mm (0.5mm)
7
330
(180°)
(8YU-48T
COI (195°)
4 - PCD ϕ128
AI (252°)
OI (285°)
8 - ϕ11
ϕ17.5×11
PCD ϕ180
LOGO
HARDY

HBC150-BT40

Belt Driven Spindle

(With Central Tool Cooling Capacity)

Characteristics & Dimensions

MODEL	HBC150
Specification	***BT40 - Ø150***
Maximum Spindle Speed *(r.p.m.)*	***8,000 R.P.M.***
Bearings Specification	***7014 x 2 | 7014 x 2***
Bearings Type	***Large Steel Balls***
Lubrication Type	***Grease***
Bearing Temparature Rise	***+ 18.00° C***
Position	***By Notch***
Device Coolong Media	***By Oil***
Taper Runout	***0.002 mm***
Balance Grade	***G1***
Total Device Weight ***(Kg)***	***53.00***

**** Taper Runout Precission ≤ 0.003 mm.*
**** All dimensions are given in millimeters.*

HBC150-BT40

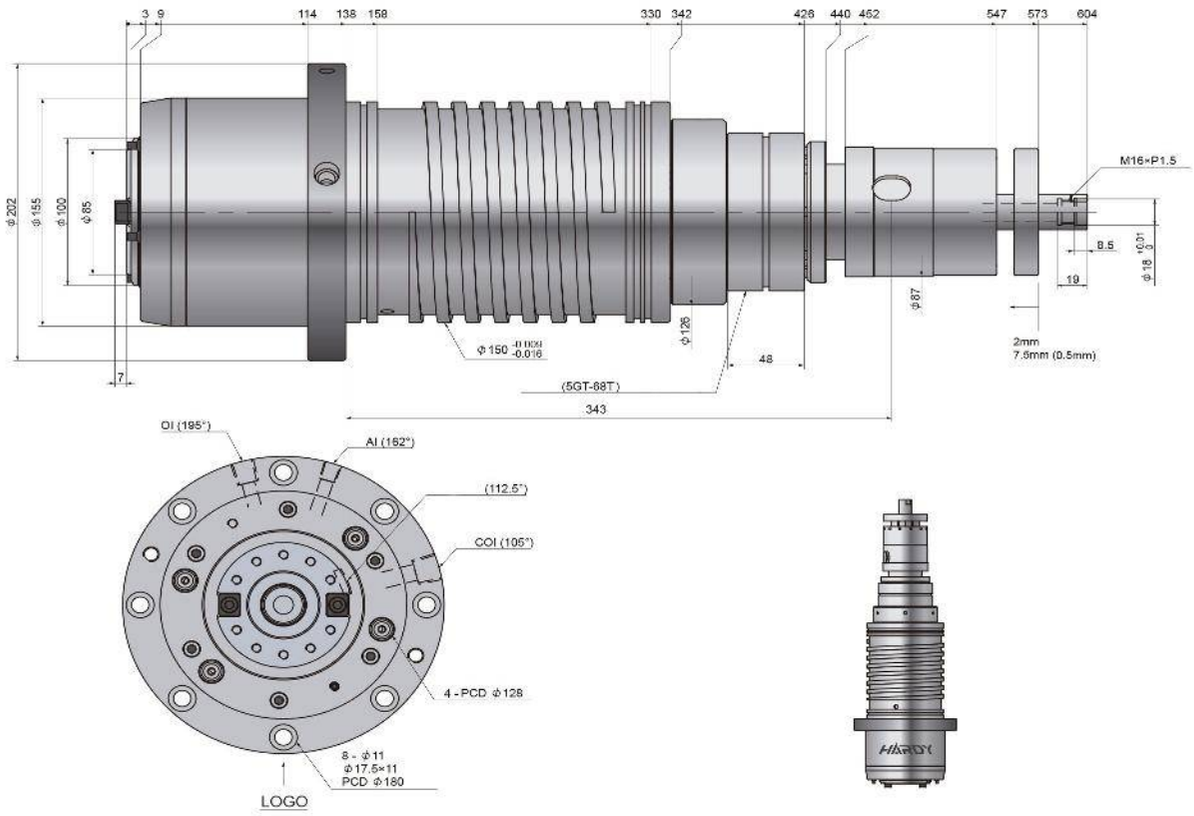
3 9 114 138 158 330 342 426 440 452 547 573 604
Φ202
Φ155
Φ100
Φ85
7
M16×P1.5
8.5
19
Φ18 +0.01 0
Φ87
Φ126
48
2mm
7.5mm (0.5mm)
Φ150 -0.000 -0.016
(5GT-68T)
343
OI (195°)
AI (162°)
(112.5°)
COI (105°)
4 - PCD Φ128
8 - Φ11
Φ17.5×11
PCD Φ180
LOGO

HD140-BT40

Direct Motor Drive Spindle

Characteristics & Dimensions

MODEL	HD140
Specification	*BT40 - Ø140*
Maximum Spindle Speed *(r.p.m.)*	*12,000 R.P.M.*
Bearings Specification	*7014 x 2 | 7014 x 2*
Bearings Type	*Large Steel Balls*
Lubrication Type	*Grease*
Bearing Temparature Rise	*+ 20.00° C*
Position	*Motor Built-In*
Device Coolong Media	*By Oil*
Taper Runout	*0.002 mm*
Balance Grade	*G1*
Total Device Weight *(Kg)*	*52.00*

**** Taper Runout Precission ≤ 0.003 mm.*
**** All dimensions are given in millimeters.*

HD140-BT40

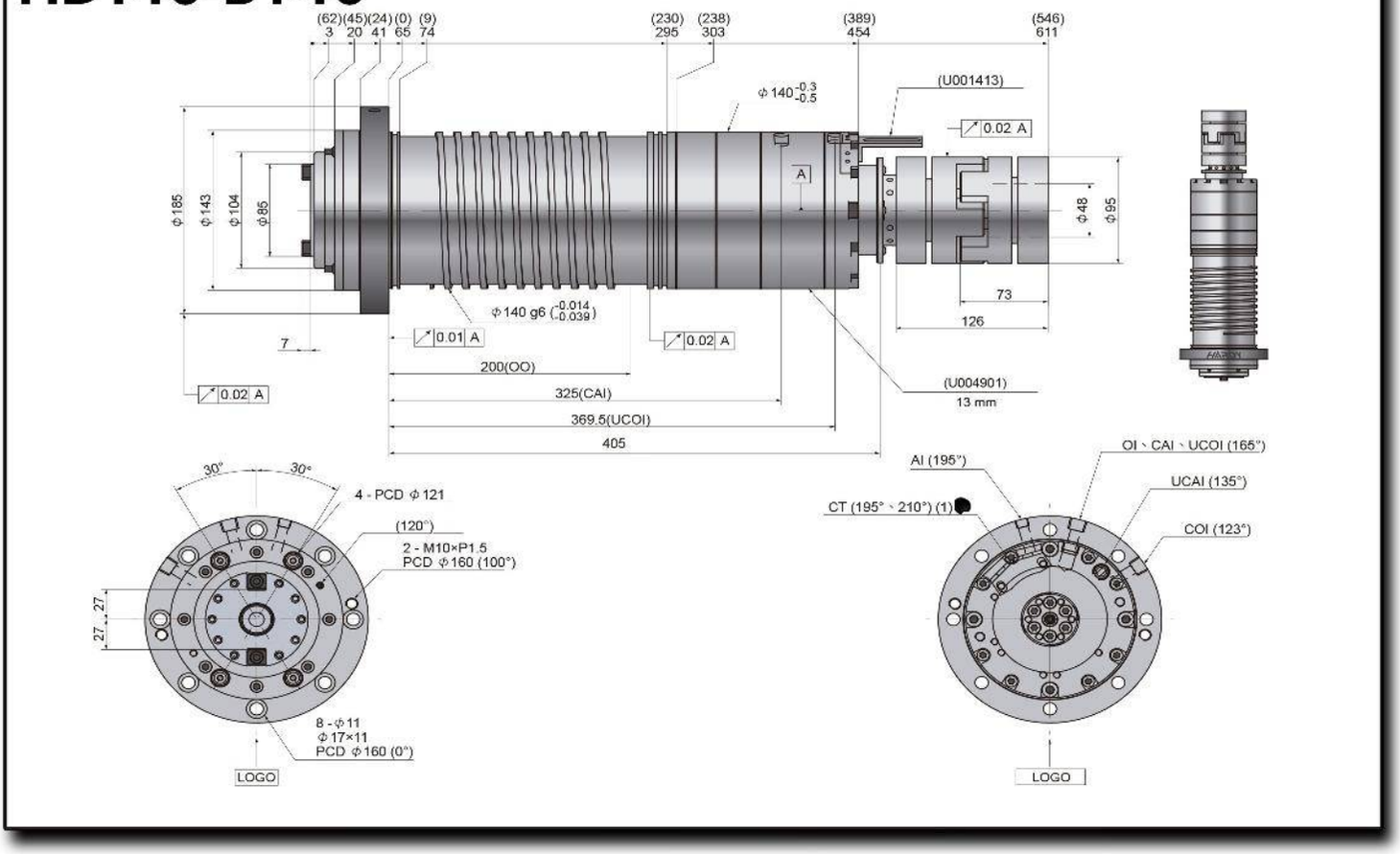
(62) (45) (24) (0) (9)
3 20 41 65 74
(230) (238)
295 303
(389)
454
(546)
611
φ140 -0.3 -0.5
(U001413)
0.02 A
A
φ185
φ143
φ104
φ85
φ48
φ95
73
126
φ140 g6 (-0.014 -0.039)
0.01 A
0.02 A
7
200(OO)
325(CAI)
369.5(UCOI)
405
(U004901)
13 mm
0.02 A
30°
30°
4 - PCD φ121
(120°)
2 - M10×P1.5
PCD φ160 (100°)
27
27
8 - φ11
φ17×11
PCD φ160 (0°)
LOGO
AI (195°)
OI、CAI、UCOI (165°)
UCAI (135°)
CT (195°、210°) (1)
COI (123°)
LOGO

HD150-BBT40

Self Driven Spindle

Characteristics & Dimensions

MODEL	HD150
Specification	*BBT40 - Ø150*
Maximum Spindle Speed *(r.p.m.)*	*12,000 R.P.M.*
Bearings Specification	*N1014 ~ 7014 x 3 | N1012*
Bearings Type	*-*
Lubrication Type	*Grease*
Bearing Temparature Rise	*+ 20.00° C*
Position	*By Notch*
Device Coolong Media	*By Oil*
Taper Runout	*0.002 mm*
Balance Grade	*G1*
Total Device Weight *(Kg)*	*115.00*

**** Taper Runout Precission ≤ 0.003 mm.*
**** All dimensions are given in millimeters.*

HD150-BBT40

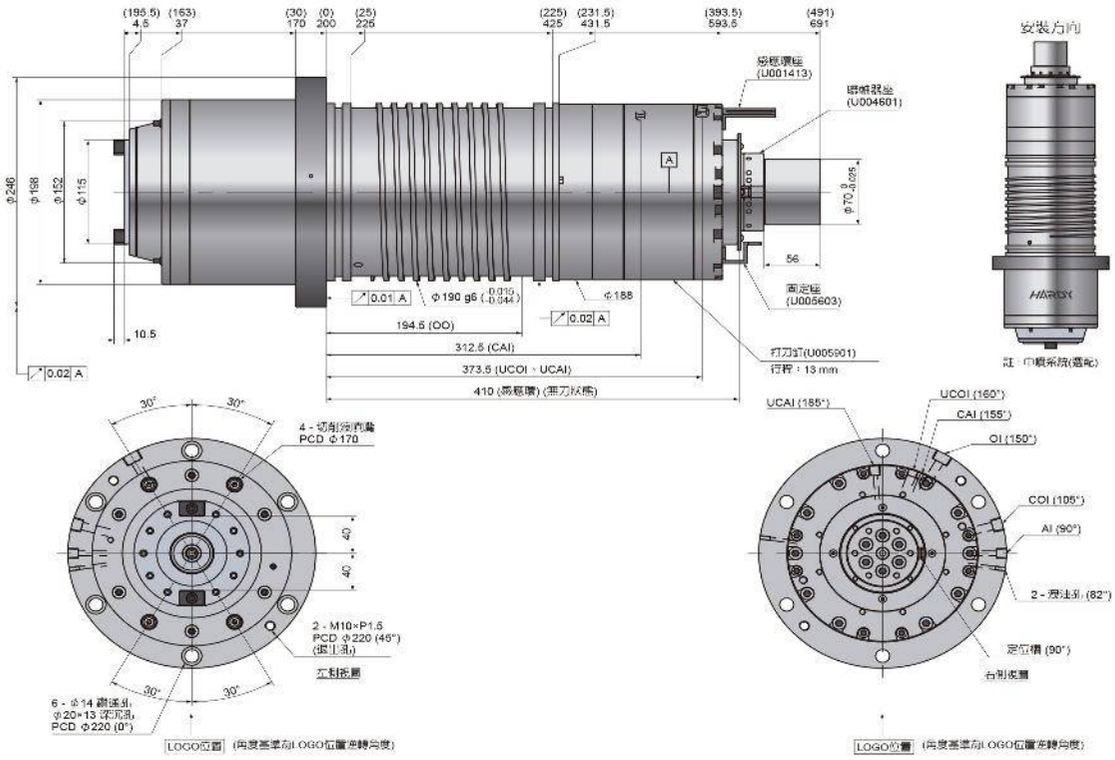
(195.5) (163)
4.5 37
(30) (0) (25)
170 200 225
(225) (231.5)
425 431.5
(393.5) (491)
593.5 691
原標環座
(U001413)
(U004601)
φ246
φ198
φ152
φ115
10.5
0.02 A
0.01 A
φ190 g6
φ188
0.02 A
194.5 (OO)
312.5 (CAI)
373.5 (UCOI、UCAI)
410 (原標環)(無刀狀態)
φ70.8
56
固定座
(U005603)
打刀缸(U005901)
行程：13 mm
安裝方向
HARDY
註：中心線系統(選配)
30°
30°
4 - 切削液孔
PCD φ170
40
40
2 - M10×P1.5
PCD φ220 (45°)
(拆卸孔)
左側視圖
6 - φ14 貫通孔,
φ20×13 深沉孔,
PCD φ220 (0°)
LOGO位置
(角度基準為LOGO位置逆轉角度)
UCAI (185°)
UCOI (160°)
CAI (155°)
OI (150°)
COI (105°)
AI (90°)
2 - 液注孔 (82°)
定位槽 (90°)
右側視圖
LOGO位置
(角度基準為LOGO位置逆轉角度)

HD190-BT50

Self Driven Spindle

Characteristics & Dimensions

MODEL	HD190
Specification	*BT50 - Ø190*
Maximum Spindle Speed *(r.p.m.)*	*6,000 R.P.M.*
Bearings Specification	*7020 x 2 | 7020 x 2*
Bearings Type	*Large Steel Balls*
Lubrication Type	*Grease*
Bearing Temparature Rise	*+ 20.00° C*
Position	*By Notch*
Device Coolong Media	*By Oil*
Taper Runout	*0.002 mm*
Balance Grade	*G1*
Total Device Weight *(Kg)*	*115.00*

**** Taper Runout Precission ≤ 0.003 mm.*
**** All dimensions are given in millimeters.*

HD190-BT50

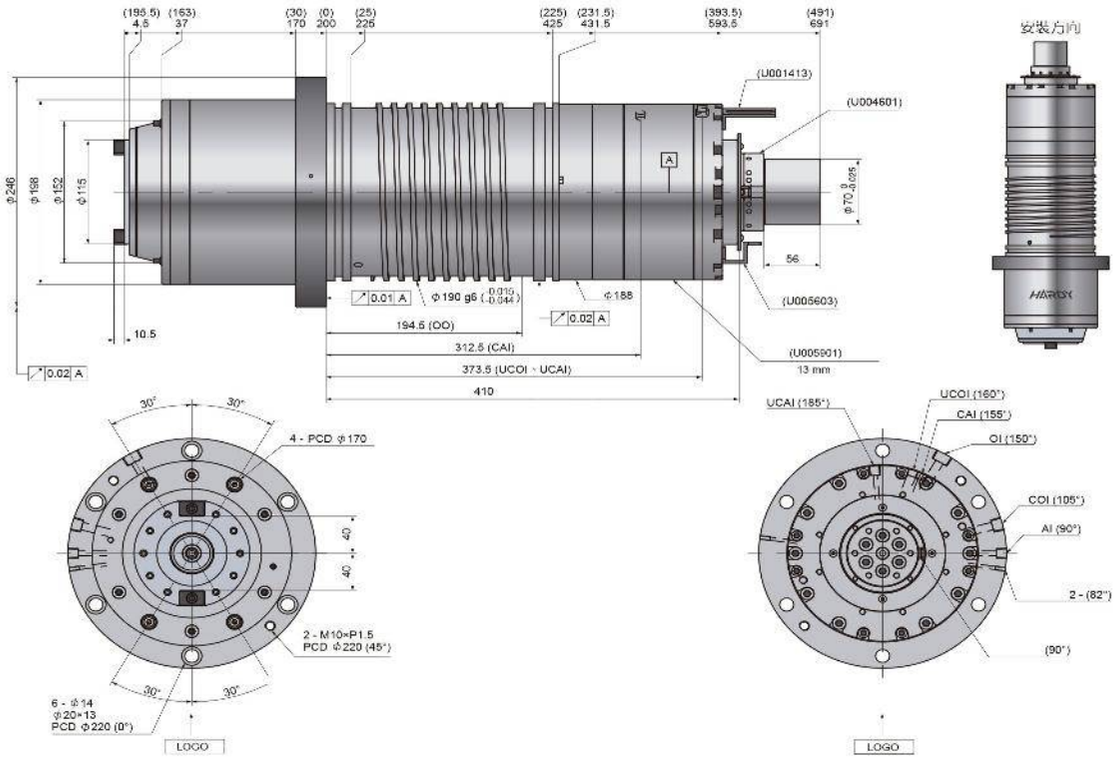
(195.5) 4.5
(163) 37
(30) 170
(0) 200
(25) 226
(225) 425
(231.5) 431.5
(393.5) 593.5
(491) 691
(U001413)
(U004601)
(U005603)
(U005901)
13 mm
Φ246
Φ198
Φ152
Φ115
10.5
0.02 A
0.01 A
Φ190 g6 (-0.010 -0.044)
Φ188
194.5 (OO)
312.5 (CAI)
373.5 (UCOI ~ UCAI)
410
56
Φ70.8 -0.025
A
B
安装方向
HARDY
30°
4 - PCD Φ170
40
2 - M10×P1.5
PCD Φ220 (45°)
6 - Φ14
Φ20×13
PCD Φ220 (0°)
LOGO
UCAI (185°)
UCOI (160°)
CAI (155°)
OI (150°)
COI (105°)
AI (90°)
2 - (82°)
(90°)

HDC120-BBT40

Direct Drive Motor Spindle

(With Central Tool Cooling Capacity)

Characteristics & Dimensions

MODEL	HDC120
Specification	*BBT40 - Ø120*
Maximum Spindle Speed *(r.p.m.)*	*12,000 R.P.M.*
Bearings Specification	*7012 x 2 | 7012 x 2*
Bearings Type	*Large Ceramic Balls*
Lubrication Type	*By Grease*
Bearing Temparature Rise	*+ 20.00° C*
Position	*Motor Built-In*
Device Coolong Media	*By Oil*
Taper Runout	*0.002 mm*
Balance Grade	*G1*
Total Device Weight *(Kg)*	*40.00*

**** Taper Runout Precission ≤ 0.003 mm.*
**** All dimensions are given in millimeters.*

HDC120-BBT40

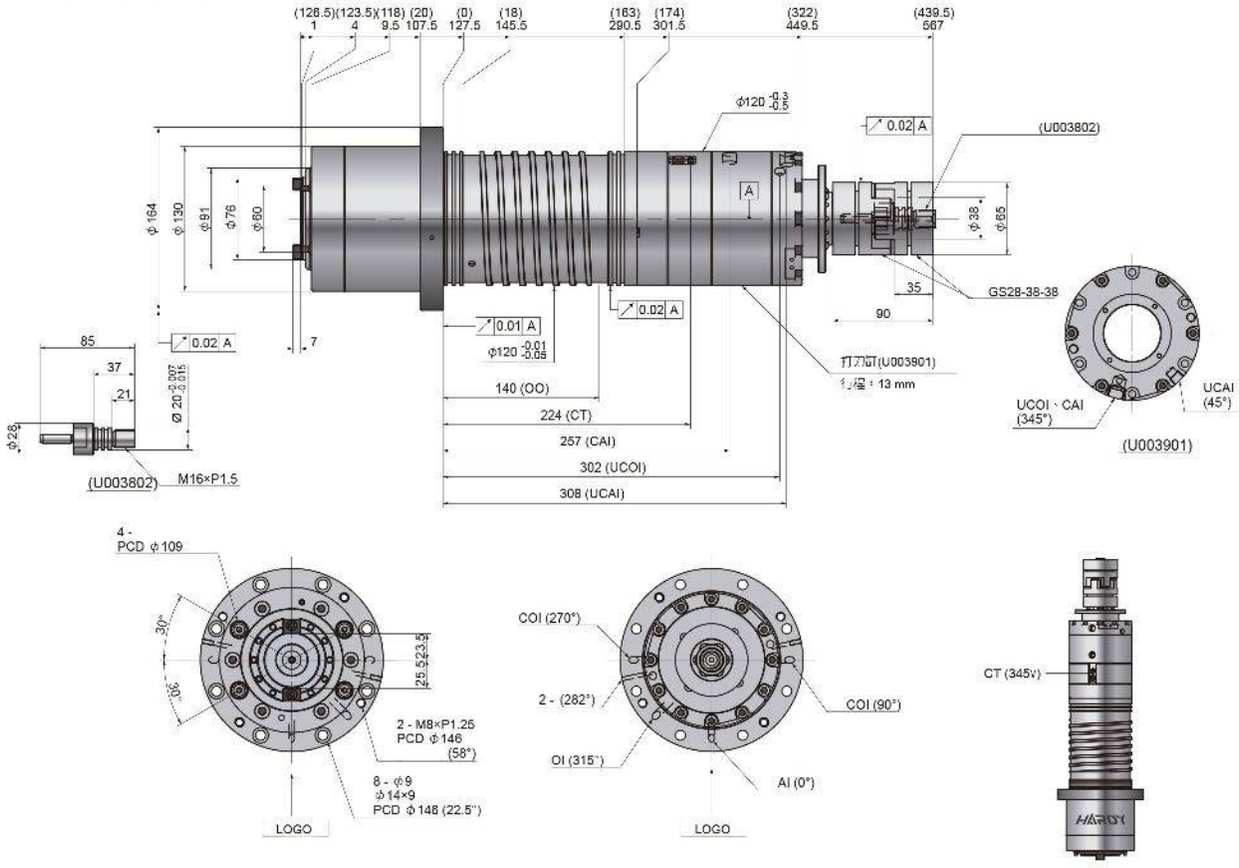

HDT150-A_2-4

Belt Driven
CNC Lathe Spindle

Characteristics & Dimensions

MODEL	HDT-150
Spindle Nose	*A_2-4*
Housin Outside Diameter *(OD)*	*150.00*
Maximum Spindle Speed *(r.p.m.)*	*6000.00*
Through Hole	*Ø45*
Fron Bearing	*7014 x 2 Ø70*
Rear Bearing	*7014 x 2 Ø70*
Lubrication	*Grasa*
Spindle Pulley	*5GT-60T*
Encoder Pulley	*5GT-54T*
Rising Temperature	*≤ 20.00° C*
Balancing	*ISO 1940 G1*
Device Accuracy	*2.000 µm*
Total Device Weight *(Kg)*	*46.00*

**** Taper Runout Precission ≤ 0.003 mm.*
**** All dimensions are given in millimeters.*

HDT150-A_2-4

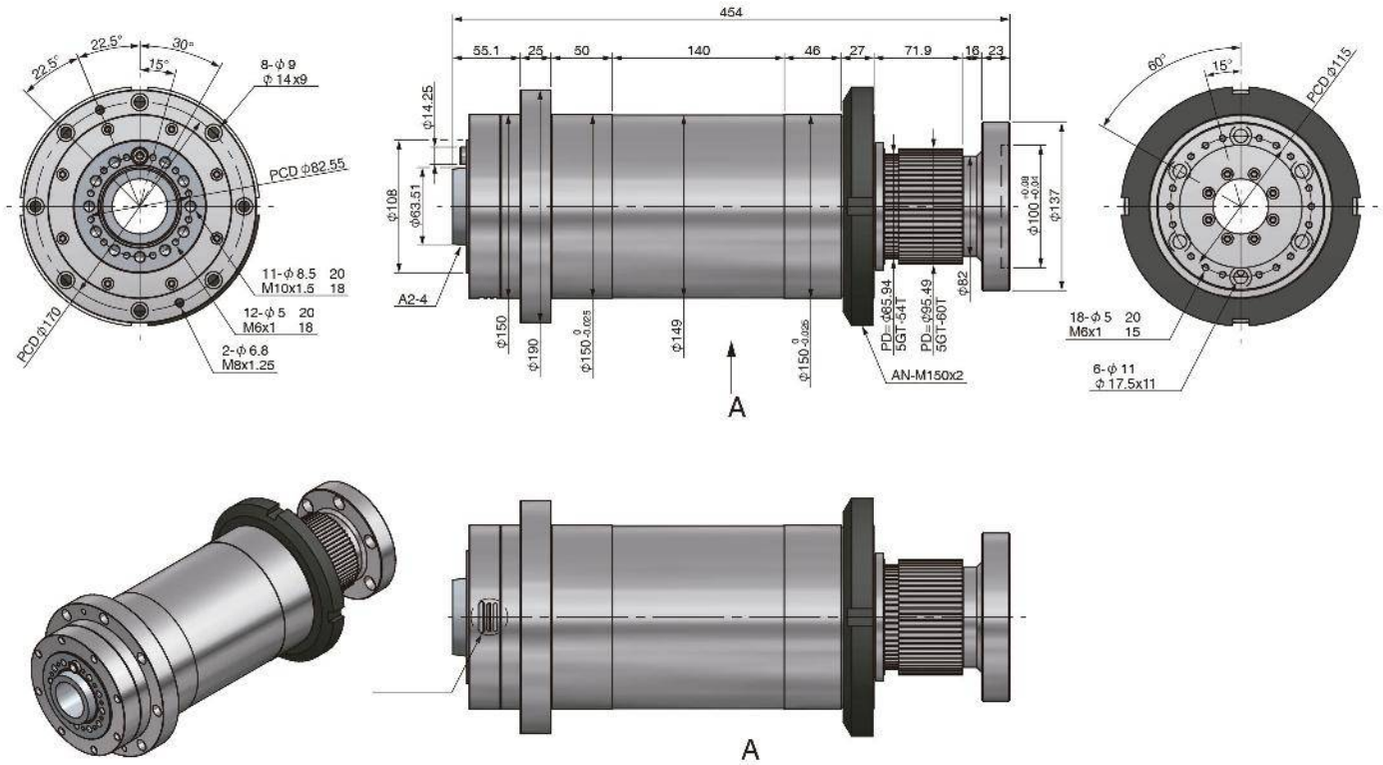
454
55.1
25
50
140
46
27
71.9
16
23
22.5°
22.5°
30°
15°
8-ϕ 9
ϕ 14x9
PCD ϕ82.55
11-ϕ 8.5 20
M10x1.5 18
12-ϕ 5 20
M6x1 18
2-ϕ 6.8
M8x1.25
PCD ϕ170
ϕ14.25
ϕ108
ϕ63.51
A2-4
ϕ150
ϕ190
ϕ149
PD=ϕ65.94
5GT-64T
PD=ϕ95.49
5GT-60T
ϕ82
AN-M150x2
ϕ137
A
60°
15°
PCD ϕ115
18-ϕ 5 20
M6x1 15
6-ϕ 11
ϕ 17.5x11
A

HDT170-A_2-5

Belt Driven Spindle

Characteristics & Dimensions

MODEL	HDT-170
Spindle Nose	*A2-5*
Housin Outside Diameter *(OD)*	*170.00*
Maximum Spindle Speed *(r.p.m.)*	*5,000.00*
Through Hole	*Ø56*
Fron Bearing	*7018 x 3 Ø90*
Rear Bearing	*7016 x 2 80*
Lubrication	*Grasa*
Spindle Pulley	*8YU-44T*
Encoder Pulley	*HDT 8M-40T*
Rising Temperature	*≤ 20.00° C*
Balancing	*ISO 1940 G1*
Device Accuracy	*2.000 µm*
Total Device Weight *(Kg)*	*61.00*

**** Taper Runout Precission ≤ 0.003 mm.*
**** All dimensions are given in millimeters.*

HDT170-A_2-5

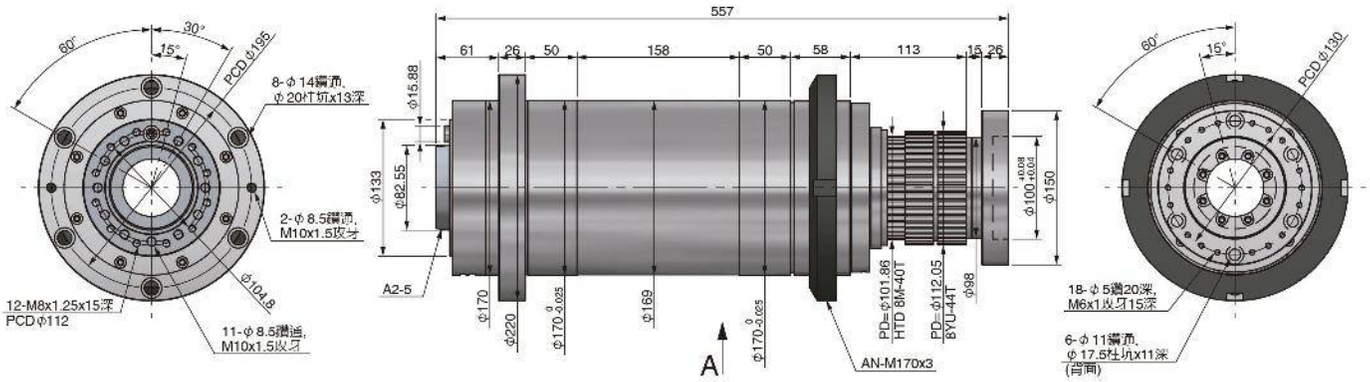

視圖A

HDT200-A_2-60

Bel Driven Spindle

Characteristics & Dimensions

MODEL	HDT-200
Spindle Nose	*A_2-6*
Housin Outside Diameter *(OD)*	*200.00*
Maximum Spindle Speed *(r.p.m.)*	*4,000.00*
Through Hole	*Ø62*
Fron Bearing	*NN3020 + BTM100*
Rear Bearing	*NN3018*
Lubrication	*Grasa*
Spindle Pulley	*3V-7*
Encoder Pulley	*5GT-72T*
Rising Temperature	*≤ 20.00° C*
Balancing	*ISO 1940 G1*
Device Accuracy	*2.000 µm*
Total Device Weight *(Kg)*	*95.00*

**** Taper Runout Precission ≤ 0.003 mm.*
**** All dimensions are given in millimeters.*

HDT200-A_2-6

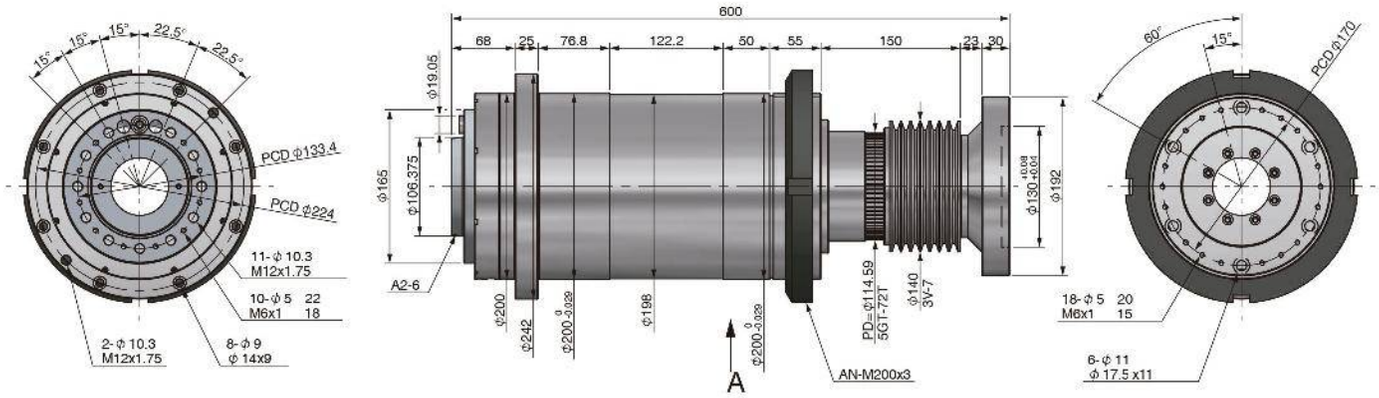
600
68
25
76.8
122.2
50
55
150
23
30
15°
15°
15°
22.5°
22.5°
PCD ϕ133.4
PCD ϕ224
11- ϕ 10.3
M12x1.75
10- ϕ 5 22
M6x1 18
2- ϕ 10.3
M12x1.75
8- ϕ 9
ϕ 14x9
ϕ19.05
ϕ165
ϕ106.375
A2-6
ϕ200
ϕ242
ϕ198
A
PD=ϕ114.59
5GT-72T
ϕ140
3V-7
AN-M200x3
ϕ192
60°
15°
PCD ϕ170
18- ϕ 5 20
M6x1 15
6- ϕ 11
ϕ 17.5 x11

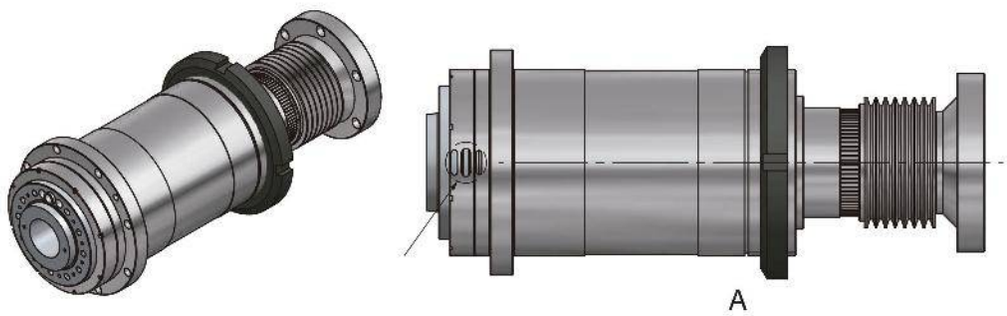
A

HE170-BBT40

Self Driven Spindle

Characteristics & Dimensions

MODEL	HE170
Specification	*BBT40 - Ø170*
Maximum Spindle Speed *(r.p.m.)*	*18,000 R.P.M.*
Bearings Specification	*7914 x 3 | 7912 x 2*
Bearings Type	*Small Ceramic Balls*
Lubrication Type	*Grease*
Bearing Temparature Rise	*+ 20.00° C*
Position	*(By Encoder)(FANUC A860-2150-V001)*
Device Coolong Media	*By Oil*
Taper Runout	*0.002 mm*
Balance Grade	*G1*
Total Device Weight *(Kg)*	*85.00*

**** Taper Runout Precission ≤ 0.003 mm.*
**** All dimensions are given in millimeters.*

HE170-BBT40

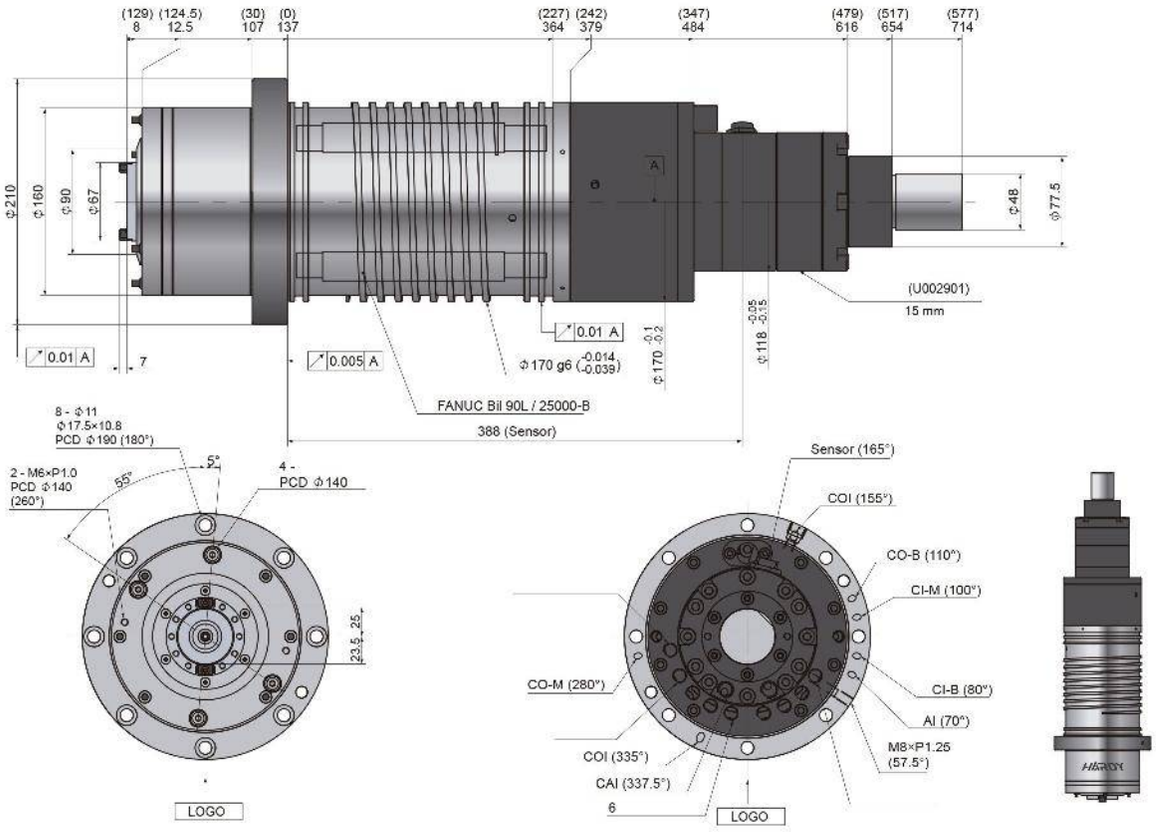
(129) (124.5)
8 12.5
(30) (0)
107 137
(227) (242)
364 379
(347)
484
(479) (517) (577)
616 654 714
Φ210
Φ160
Φ90
Φ67
Φ48
Φ77.5
A
(U002901)
15 mm
0.01 A
7
0.005 A
Φ170 g6 (-0.014, -0.039)
Φ170 -0.1 -0.2
Φ118 -0.05 -0.15
FANUC Bil 90L / 25000-B
388 (Sensor)
8 - Φ11
Φ17.5×10.8
PCD Φ190 (180°)
2 - M6×P1.0
PCD Φ140
(260°)
55°
5°
4 -
PCD Φ140
23.5 25
LOGO
Sensor (165°)
COI (155°)
CO-B (110°)
CI-M (100°)
CO-M (280°)
CI-B (80°)
AI (70°)
M8×P1.25
(57.5°)
COI (335°)
CAI (337.5°)
6
LOGO

HE170-HSKE50

Self Driven Spindle

Characteristics & Dimensions

MODEL	HE-170
Specification	*HSKE50 - Ø170*
Maximum Spindle Speed *(r.p.m.)*	*30,000 R.P.M.*
Bearings Specification	*7011 x 2 | 7008 x 2*
Bearings Type	*Small Ceramic Balls*
Lubrication Type	*Oil Air Mist System*
Bearing Temparature Rise	*+ 20.00° C*
Position	*(By Encoder)(FANUC A860-2155-T311)*
Device Coolong Media	*By Oil*
Taper Runout	*0.002 mm*
Balance Grade	*G1*
Total Device Weight *(Kg)*	*80.00*

**** Taper Runout Precission ≤ 0.003 mm.*
**** All dimensions are given in millimeters.*

HE170-HSKE50

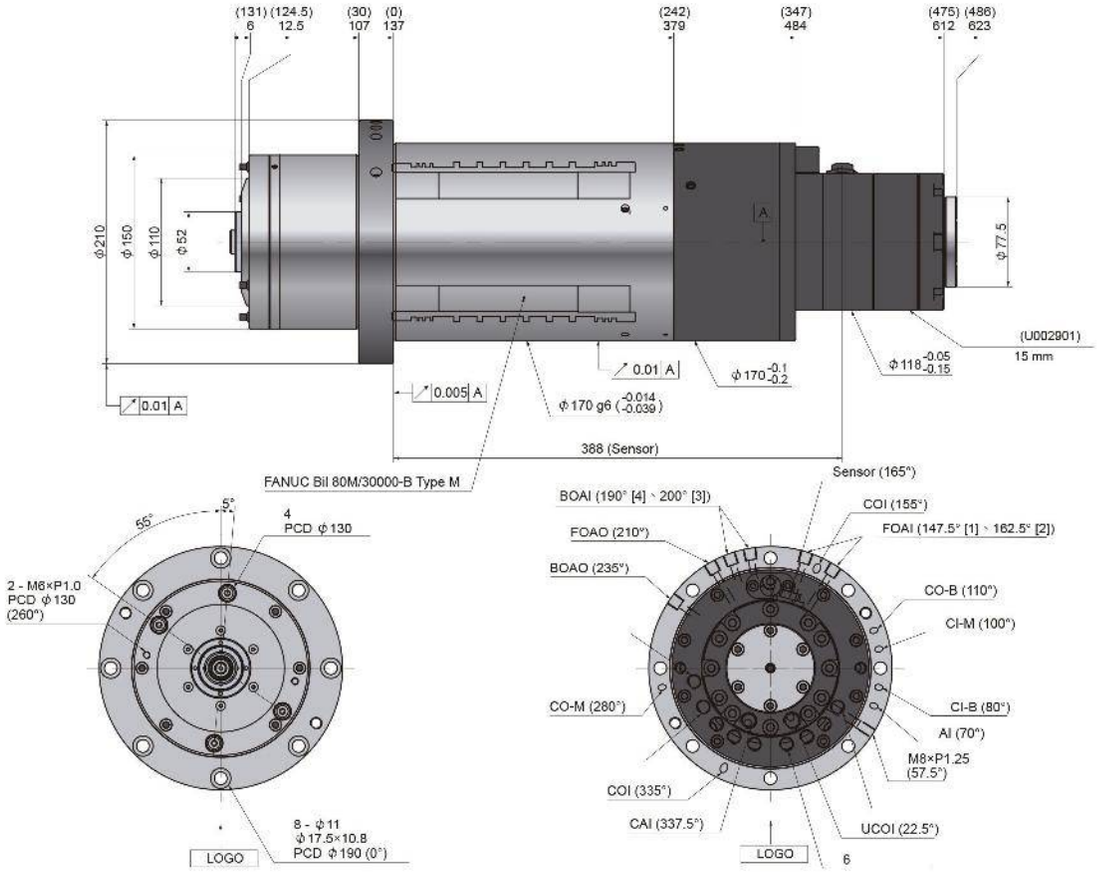

HG-170

Husillo Impulsado Por Banda Para Fresado/Esmerilado

Characteristics & Dimensions

MODELO	HG-170
Specification	*Ø170*
Maximum Spindle Speed *(r.p.m.)*	*1450.00*
Bearings Specification	*7018 x 4 | NN3018K x 1*
Bearings Type	*Large Steel Balls | Roller*
Lubrication Type	*Grease*
Bearing Temparature Rise	*+ 15.00° C*
Taper Runout	*0.002*
Balance Grade	*G1*
AI *(Air Flow Connection)*	*PT 1/8" - 02166*
Air Pressure Working Range *(Kg/cm²)*	*1.00 ~ 1.50*
Total Device Weight *(Kg)*	*106.00*

**** Taper Runout Precission ≤ 0.003 mm.*
**** All dimensions are given in millimeters.*

HG-170

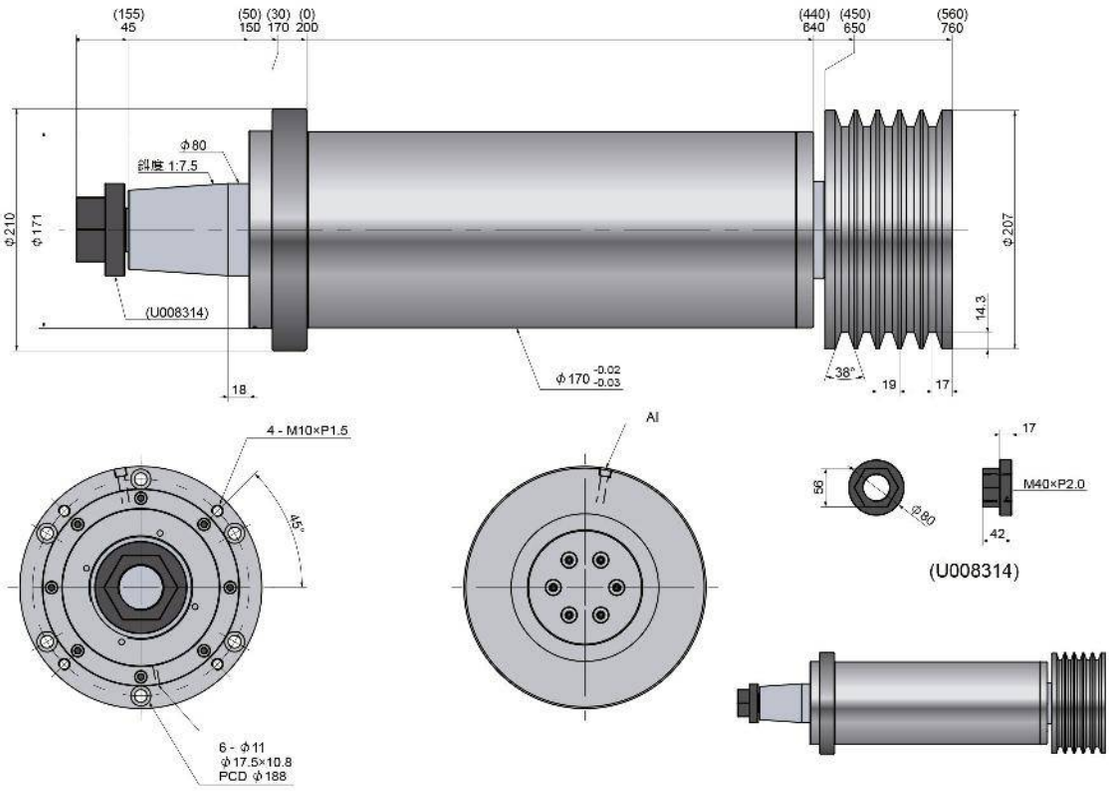
(155)
45
(50) (30) (0)
150 170 200
(440) (450)
640 650
(560)
760
φ80
錐度 1:7.5
φ210
φ171
(U008314)
18
φ170 -0.02 -0.03
38°
19
17
14.3
φ207
4 - M10×P1.5
45°
6 - φ11
φ17.5×10.8
PCD φ188
AI
56
φ80
17
M40×P2.0
42
(U008314)

4Man

Elements For Manufa

MEXICO BRANCH OFFICE
Roberto Diaz No. 401
Ciudad Industrial
Aguascalientes, Ags.
México
20290

4ManPro@4ManPro.com
(449) 171 3420
www.4ManPro.com/SPA/

USA BRANCH OFFICE
4ManPro®
708 Main St.
10th Floor
Houston, Tx, USA
77002

4ManPro-USA@4ManPro.com
+1 (832) 871 5022
www.4ManPro.com/ENG/

Elements For Manufacturing Processes